Industrial Size Gasification for Syngas, Substitute Natural Gas and Power Production

DOE/NETL-401 / 040607

FR-53769211

April 2007

Disclaimer

This report was prepared as an account of work sponsored by an agency of the United States Government. Neither the United States Government nor any agency thereof, nor any of their employees, makes any warranty, express or implied, or assumes any legal liability or responsibility for the accuracy, completeness, or usefulness of any information, apparatus, product, or process disclosed, or represents that its use would not infringe privately owned rights. Reference therein to any specific commercial product, process, or service by trade name, trademark, manufacturer, or otherwise does not necessarily constitute or imply its endorsement, recommendation, or favoring by the United States Government or any agency thereof. The views and opinions of authors expressed therein do not necessarily state or reflect those of the United States Government or any agency thereof.

Industrial Size Gasification for Syngas, Substitute Natural Gas and Power Production

---

DOE/NETL-401 / 040607

FR-53769211

April 2007

NETL Contact: DE-AC26-04NT41817.401.01.05.002

Office of Systems Analysis and Planning Support

Prepared by:

Leonard M. Bartone, Jr., P.E.
Jay White
WorleyParsons Group Inc.

Research and Development Solutions, LLC.

National Energy Technology Laboratory
www.netl.doe.gov

This page is intentionally left blank

TABLE OF CONTENTS

Table of Contents ..... *i*

List of Exhibits ..... *iii*

Terminology ..... *vii*

Acknowledgements ..... *ix*

I Executive Summary *I-1*

II Industry Energy Demand profile *II-1*

II.1 U.S. Industry Natural Gas Consumption **II-2**

II.2 U.S. Industry Electric Energy Consumption **II-12**

II.3 Reliability **II-17**

II.4 Environmental Considerations **II-17**

II.5 Siting Considerations **II-18**

III Potential Fuels and Byproducts *III-1*

III.1 Potential Fuels **III-1**

III.1.1 Coals III-4

III.1.2 Other Fuels III-5

III.2 Potential Products and By-Products **III-6**

III.2.1 Hydrogen III-8

III.2.2 Elemental Sulfur III-10

IV Base Gasification and Gas Clean-up Design *IV-1*

IV.1 BGL Gasifier Background **IV-1**

IV.2 Base Gasification System Conceptual Design **IV-3**

IV.2.1 Component Descriptions IV-6

IV.2.2 Performance and Syngas Composition IV-10

IV.3 Syngas Cleanup System Conceptual Design **IV-12**

IV.3.1 AGR Process Evaluation IV-12

IV.3.2 Syngas Cleanup System Conceptual Design IV-21

IV.4 Claus Process Description **IV-24**

V Conceptual Design Requirements Document .....

VI Conceptual Design Description and Cost Estimate for Case 1A - Syngas Production Reference Plant - Illinois #6 Coal .....

VII Conceptual Design Description and Cost Estimate for Case 1AH - Syngas and H_2 Co-Production Reference Plant – Illinois #6 Coal.....

VIII Conceptual Design Description and Cost Estimate for Case 2A - SNG Production Reference Plant – Illinois #6 Coal.....

IX Conceptual Design Description and Cost Estimate for Case 3A - Syngas to Power Reference Plant – Illinois #6 Coal.....

X Conceptual Design Description and Cost Estimate for Case 4A - SNG to Power Reference Plant – Illinois #6 Coal.....

XI Impact of PRB Coal on Design, Performance, and Cost of Reference Plants XI-1

XI.1 Impact on Reference Plant Designs XI-2

XI.2 Impact on Reference Plant Performance XI-3

XI.2.1 Syngas Production Reference Plant.....XI-5
XI.2.2 Syngas and H_2 Co-production Reference Plant XI-5
XI.2.3 SNG Production Reference Plant.....XI-6
XI.2.4 Syngas to Power Production Reference Plant XI-6
XI.2.5 SNG to Power Production Reference Plant XI-7

XI.3 Impact on Reference Plant Cost XI-8

XII Potential Environmental Impact and Applicable Environmental Regulations.....XII-11

XII.1 New Syngas or SNG production Facilities and Power Facilities XII-11

XII.2 Industrial Customer XII-18

XIII Conclusions and Recommendations.....XIII-1

XIV References XIV-1

LIST OF EXHIBITS

Exhibit I-1 Summary of Reference Plant Conceptual Performance Characteristics with Illinois #6 Coal I-10

Exhibit I-2 Summary of Reference Plant Conceptual Cost Estimates with Illinois #6 Coal I-11

Exhibit I-3 Sketch Showing Major Systems Comprising the Syngas Production Reference Plant I-13

Exhibit I-4 Sketch of Major Systems Comprising the Syngas and H_2 Co-Production Reference Plant I-15

Exhibit I-5 Sketch of Major Systems Comprising SNG Production Reference Plant I-17

Exhibit I-6 Summary of Reference Plant Conceptual Performance Characteristics with PRB Coal I-23

Exhibit I-7 Summary of Reference Plant Conceptual Cost Estimates with PRB Coal I-24

Exhibit II-1 U.S. Industry Natural Gas Consumption as Fuel by Region II-4

Exhibit II-2 U.S. Industry Natural Gas Consumption as Fuel by Sector II-4

Exhibit II-3 Natural Gas Consumption by the U.S Chemical Industry II-6

Exhibit II-4 Natural Gas Consumption by the U.S. Petroleum and Coal Products Industry II-6

Exhibit II-5 Natural Gas Consumption by the U.S Primary Metals Industry II-7

Exhibit II-6 Natural Gas Consumption by the U.S Food Industry II-7

Exhibit II-7 Natural Gas Consumption by the U.S Paper Industry II-8

Exhibit II-8 Natural Gas Consumption by the U.S Nonmetallic Mineral Products Industry II-8

Exhibit II-9 Natural Gas Consumption by the U.S Fabricated Metal Products Industry II-9

Exhibit II-10 Number of Industrial Plants in IHS 2005 MIPD With Annual Natural Gas Consumption Rates Greater than or Equal to 250 MMBtu/hr by SIC Name II-10

Exhibit II-11 Distribution of Industrial Plants in IHS 2005 MIPD with Annual Natural Gas Consumption Greater than or Equal to 250 MMBtu/hr by State II-11

Exhibit II-12 Distribution of Industrial Plants in IHS 2005 MIPD with Annual Natural Gas Consumption Greater than 250 MMBtu/hr by Region II-11

Exhibit II-13 U.S. Industry Annual Net Electric Energy Consumption by Region II-13

Exhibit II-14 U.S. Annual Net Electric Energy Consumption by Industry II-13

Exhibit II-15 U.S. Industry On-Site Electric Energy Generation by Region II-15

Exhibit II-16 U.S. Industry On-Site Electric Generating Capacity by Region II-15

Exhibit II-17 U.S. Industry On-Site Electric Energy Generation by Industry II-16

Exhibit II-18 U.S. Industry On-Site Electric Generating Capacity by Industry II-16

Exhibit III-1 Select List of Coals Tested in BGL Gasifiers in Westfield Development Center III-3

Exhibit III-2 Waste / Coal Mixtures Demonstrated in Commercial BGL Gasifier at SVZ III-3

Exhibit III-3 Availability, Heating Value, and Price of Select Coal Types III-4

Exhibit III-4 Availability, Heating Value, and Price of Select Opportunity Fuels III-5

Exhibit III-5 Flow of Sulfur in the U.S. in 2000 ..... III-11

Exhibit III-6 End Uses of Sulfur and Sulfuric Acid 1976-2000 ..... III-11

Exhibit III-7 Trends in Salient Sulfur Statistics III-12

Exhibit IV-1 Comparison of Lurgi Dry-ash Gasifier and BGL Gasifier IV-2

Exhibit IV-2 Design Illinois #6 Coal Characteristics IV-4

Exhibit IV-3 Illustration of BGL Gasifier IV-5

Exhibit IV-4 Conceptual Elevation of BGL 1000 Gasification System with Spare Gasifier IV-10

Exhibit IV-5 Summary of Base Gasification System Performance IV-11

Exhibit IV-6 Advantages and Disadvantages of the Rectisol Process IV-15

Exhibit IV-7 Advantages and Disadvantages of the Selexol Process IV-17

Exhibit IV-8 Advantages and Disadvantages of the Ucarsol Process IV-19

Exhibit IV-9 Advantages and Disadvantages of the Hybrid Flexorb SE Process IV-20

Exhibit IV-10 Summary of Base Syngas Cleanup System Performance IV-22

Exhibit XI-1 Summary of Reference Plant Conceptual Performance Characteristics with PRB Coal XI-4

Exhibit XI-2 Summary of Reference Plant Conceptual Cost Estimates with PRB Coal XI-9

Exhibit XII-1 Proposed NSPS Emissions Limitations for Stationary Combustion Turbines Constructed after 18Feb2005 (40CFR60, Subpart KKKK) XII-12

Exhibit XII-2 NSPS Emission Limitations For Industrial-Commercial-Institutional Steam Generating Units (> 100 MMBtu/hr) (40CFR60, Subpart Db) XII-13

Exhibit XII-3 Best Available Control Technology Determinations for Other Projects XII-14

Exhibit XII-4 Industrial Boiler NESHAPs XII-15

Exhibit XII-5 Turbines and Reciprocating Engine NESHAPs XII-16

Exhibit XII-6 PSD/NSR Significant Net Emissions Rate Increase XII-19

This page is intentionally left blank

TERMINOLOGY

ASU ..... Air separation unit
BEC ..... Bare erected cost
BGL ..... British Gas Lurgi
BTX ..... Benzene, Toluene, and Xylene
Btu ..... British thermal unit
ºC ..... Degrees Celsius
CC ..... Combined cycle
CO_2 ..... Carbon dioxide
CT, GT ..... Combustion turbine, synonym for gas turbine
DME ..... Dimethyl ether
DOE ..... Department of Energy (United States)
DRD ..... Design Requirements Document
EIA ..... Energy Information Administration
EPA ..... Environmental Protection Agency
°F ..... degrees Fahrenheit
FOF ..... Forced outage factor
FOR ..... Forced outage rate
fps ..... Feet per second
GE ..... General Electric
GT, CT ..... Gas turbine, synonym for combustion turbine
GWh ..... Gigawatt-hour
Hg ..... Mercury
HHV ..... Higher Heating Value
HRSG ..... Heat recovery steam generator
ID ..... Induced Draft (fan)
IDC ..... Interest during construction
IGCC ..... Integrated Gasification Combined Cycle
kW, kWe ..... Kilowatt electric
kWt ..... Kilowatt thermal
KWh ..... Kilowatt-hour
LHV ..... Lower heaving value
MDEA ..... Methyl diethanol amine
MIBK ..... Methyl Isobutyl Ketone
MW, MWe ..... Megawatt electrical
MW_t ..... Megawatt thermal
MWh ..... Megawatt-hour
NETL ..... DOE National Energy Technology Laboratory
NOx ..... Nitrous oxides
O_2 ..... Oxygen
O&M ..... Operating and Maintenance
P&W ..... Pratt & Whitney
Part. ..... Particulate emissions
POX ..... Partial Oxidation
psia ..... Pound/square inch (14.696 psi = 1 atm)
Q ..... Heat
QGESS ..... DOE/NETL Quality Guidelines for Energy System Studies
S ..... Sulfur content of fuel
scf ..... Standard cubic feet (based on 14.7psia/60°F)
SNCR ..... Selective non-catalytic reduction (for NOx control)
SNG ..... Substitute (Synthetic) Natural Gas
SO_2 ..... Sulfur dioxide
ST ..... Steam turbine
Syngas ..... Synthetic gas
T&D ..... Transmission and distribution (electrical)
t ..... Short ton (2,000 lbs)
TG ..... Turbo-generator, (turbine-generator)
t/h ..... Ton/hour
ton ..... short ton, (2000 lbs)

t/h,tph ..... Ton per hour
t/y,tpy..... Ton per year
TPC ..... Total plant cost
US, U.S. ..... United States
USEPA ..... United States Environmental Protection Agency
USD, US$ ..... The United States Dollar
USDOE ..... United States Department of Energy
y, yr..... Year

ACKNOWLEDGEMENTS

This work was performed under DOE/NETL Contract No. DE-AM26-04NT41817 with Research and Development Solutions (RDS), LLC. WorleyParsons Group, Inc. performed the work under a subcontract agreement with RDS, Subcontract No. 41817M2943.

The NETL Project Manager for this activity was Jeffrey Hoffmann.

The authors acknowledge the contributions of Victor Shellhorse and Bill Jones of Allied Syngas Corporation who were of considerable assistance in describing the characteristics of the British Gas Lurgi gasifier.

This page intentionally left blank

I EXECUTIVE SUMMARY

A feasibility study was performed to evaluate the technical and economic viability of coal-derived syngas and substitute natural gas (SNG) refueling of U.S. industries. The study included the following tasks:

1. Develop an energy demand profile for potential Industrial customers.

2. Perform research on potential fuel sources and process by-products for the project system.

3. Develop a base gasification and gas clean-up design.

4. Develop a Design Requirements Document.

5. Perform conceptual design and cost estimates for Reference Plants for the production of syngas from coal gasification, production of SNG, and combustion turbine combined cycle refueling with syngas and SNG.

6. Investigate potential environmental impact and applicable environmental regulations.

The basis for the gasification system conceptual design is the BGL 1000 gasifier licensed by Advantica Limited and Envirotherm GmbH to Allied Syngas Corporation for the North American market.

This report describes the work performed and results of the study. A brief summary of the results are presented in this section. Details of the study are provided in the subsequent sections.

Energy Demand Profile of Potential Customers

An investigation of the energy demand profile of potential U.S. industrial customers with respect to energy demand, reliability, and environmental constraints was performed based on published information and discussions with potential customers.

Overall, The U.S. Department of Energy, Energy Information Administration (DOE/EIA) estimates that U.S. Industry will consume about 7,500 trillion Btu of natural gas in 2006, or about 36% of the total U.S. annual consumption. Published data indicate that there is significant consumption by Industry in all regions of the U.S., although slightly over 50% is consumed in the South region.

Data in the DOE/EIA 2002 Manufacturing Energy Consumption Survey (MECS database) indicate that U.S. Industry consumes about 964,112 gigawatt-hours (GWh) of electrical energy annually. This represents about 26% of the total national electric energy consumption. The data also indicates that U.S. Industry generates about 134,268 GWh of electric power annually on-site from an on-site electric generating capacity of about 15.3 GW. About 67% of the capacity and generation is by plants in the South region, with the remainder split about evenly by Industry in the Midwest, West, and Northeast regions.

A review of data in IHS Inc.'s 2005 Major Industrial Plants Database (MIPD) indicates that there are a large number of industrial plants (from 100 to 200 out of 344 plants with consumptions rates greater than 250 MMBtu/hr) whose natural gas energy consumption rate is greater than the syngas or SNG output of a single BGL gasifier processing Illinois #6 coal or PRB coal. Some of these plants may be in areas where site constraints may inhibit installation of coal gasification facilities on-site; however, it's likely that a large number will be acceptable candidates, or can be served by remote location of the gasification plant. From 100 to 200 plants or more in the database could have natural gas consumptions rates lower than the output of a single BGL 1000 gasifier; thus indicating that there may also be a market for a smaller gasifier. About 66 of the plants in the database (less than 20%) have natural gas consumption rates greater than 2,000 MMBtu/hr. Much of the emphasis in commercial implementation of coal gasification in the U.S. to date has been in utility IGCC plants with gasifiers that have single unit capacities on the order of 2,000 MMBtu/hr or more.

Discussions with industrial gas suppliers and potential industrial customers have indicated that in general, industrial plants have high availabilities and require fuel supply reliability near 100%. Some plants, such as those in the steel industry, have a large number of burners, and conversion of all burners to syngas firing or dual syngas/natural gas firing may involve major capital investment and/or operational modifications. These plants would likely be best served by a coal gasification facility producing SNG rather than syngas.

A major concern of potential industrial customers is the impact that refueling from natural gas to coal-derived syngas will have on their gaseous emissions and how it will affect their air quality permits. Potential customers do not want to increase either their hourly emissions or significantly increase their annual emissions because it may require that they add pollution control equipment to meet New Source Performance Standards (NSPS), National Emissions Standards for Hazardous Air Pollutants (NESHAP), Best Available Control Technology (BACT), or Lowest Achievable Emission Rates (LAER) requirements. Potentially emissions of sulfur dioxide and mercury will likely be of most concern since it is anticipated that particulate matter, NOx, and CO emissions will be similar to those from natural gas combustion.

In summary, the significant natural gas and electric energy demand by U.S. Industry, the high and unstable price history of natural gas, the high availability of industrial plants, and environmental concerns of industry show the need for a reliable, industrial size coal gasification system to produce a clean gaseous fuel while taking advantage of the abundant coal supplies and relatively stable coal prices in the U.S. Additionally, the widespread distribution of energy intensive industries across the U.S. indicates the need for a gasification system with fuel flexibility that can utilize local coals and other local fuels of opportunity.

A more detailed discussion of the results of the investigation into the U.S. Industry energy demand profile is provided in Section II of this report.

Potential Fuel Sources and Process By-products

An investigation of potential fuel sources and process by-products for the project system, a BGL gasifier-based system, was performed. The BGL gasifier is a dry feed, fixed bed, slagging gasifier that can gasify essentially all of the coals mined in the U.S., whether they be Eastern bituminous, western sub-bituminous, or lignites; non-caking, weakly caking, or strongly caking; or have low or high ash fusion temperatures. The gasifier can accept solid fuels that have a typical as-received size of ¼" to 2", and can handle fines up to about 40% in the primary feed stream depending on the coal characteristics. Allied Syngas Corporation, who has the exclusive license to market the BGL technology in North America, indicates that the BGL gasifier can accept higher fines contents with special handling. A wide range of composition characteristics are acceptable to the BGL gasifier including high moisture fuels such as lignite. A large number of

different types of coal and fuels of opportunity such as petcoke, biomass, TDF, and RDF have either been processed commercially in a BGL gasifier or tested in pilot-scale units.

Coal is an abundant resource in the U.S. with relatively low delivery costs. U.S. Geological Survey (USGS) and DOE/EIA information indicate that there are over 840 billion tons of available bituminous, PRB, and lignite coal reserves. The heating values range from 6,300 Btu/lb (HHV, MAF) for some North Dakota lignites to about 14,000 Btu/lb (HHV, MAF) for Eastern bituminous coal from the Appalachian and Illinois Basins. The average price for industrial users in the U.S. ranges from about $1/MMBtu for PRB coals to $2.38/MMBtu for bituminous coals. Published information indicates that is also about 29 million tons per year of petcoke with heating values ranging from 12,600 Btu/lb to 14,500 Btu/lb produced by U.S. refineries. The average value of this potential fuel ranges from $0.46/MMBtu in the Gulf Coast region to $1.43/MMBtu in the U.S. West.

Potential products from applications of the BGL gasifier include medium-Btu syngas, hydrogen, SNG, Fischer-Tropsch products (diesel fuel, jet fuel, DME, etc.), power, and various chemicals. Potential commercial by-products of clean syngas production include sulfur; slag; and CO_2. Tars, oils, phenols, and naphtha are typically recycled into the gasifier to enhance the energy content of the syngas product. There is a significant market in the U.S. for hydrogen, particularly in refineries where it is used to remove organic sulfur from crude oils and to convert heavy crude to lighter, easier to refine, and more marketable products. Published information indicate that refineries consume about 4.2 million tons/year (1.7 trillion scf/year) or more of hydrogen. Reports on the market for hydrogen indicate that demand by refineries is expected to increase because of more stringent regulations with respect to sulfur content in gasoline and diesel fuel, and because refiners are processing more heavy sour crude, which requires additional hydrogen for sulfur removal, due to the increasing cost of sweet crude. The price of hydrogen has historically followed the price of natural gas, the primary source of hydrogen, with the hydrogen price being about 1.6 times the price of natural gas when produced in a large scale plant.

The market for sulfur is very site specific, as most of the demand for sulfur is for agricultural chemicals (primarily fertilizers). Information published by the U.S. Geological Survey indicates that domestic elemental sulfur provided 70% of domestic consumption in 2004, and byproduct sulfuric acid accounted for 6%. The remaining 24% was provided by imported sulfur and sulfuric acid. Information published

by the U.S. Geological Survey indicates that, although the consumption of sulfur is growing at a slower rate than domestic production, the U.S. still consumes more sulfur than is available from domestic sources. The value of elemental sulfur varies significantly across the U.S., with contract prices in 2004 between $60 and $70/metric ton in Florida, where there is a large demand in central Florida, and between $15 and $20/metric ton on the West Coast. The average price in the U.S. in 2004 was about $32.50/metric ton.

The market for CO_2 would also be site specific. CO_2 is a by-product of the Rectisol AGR process. If the syngas is shifted with water to convert CO to H_2 and CO_2 for SNG production, the quantity of CO_2 removed in the Rectisol process is significant. If the syngas production plant is located in the vicinity of a CO_2 transport pipeline or oil fields that could benefit from enhanced oil recovery (EOR), then it may be economical to use the CO_2 for EOR. Otherwise, the CO_2 rich stream from the AGR process, that also contains some hydrocarbons, can be combined with syngas that is used as fuel in a fired-boiler to produce steam for the processes.

Slag from the gasifier may have site-specific market value as road aggregate, concrete aggregate, or road material. However, the authors are not aware of any coal gasification slag currently being used as a beneficial product. Allied Syngas Corporation indicates that the slag from the BGL gasifier has proven to be non-leaching and, thus, at worst can be disposed in a non-hazardous landfill.

More detailed discussion of the potential fuels sources and by-products from the BGL gasifier is provided in Section III of this report.

Base Gasification and Gas Clean-up Designs

A base gasification system and gas clean-up system conceptual design was developed to be used as a basis for developing conceptual designs and cost estimates for several industrial size gasification Reference Plants. The base gasification system design is based on a BGL 1000 gasifier producing medium-Btu syngas from Illinois #6 coal. The expected output of the gasifier (about 952 MMBtu/hr of medium Btu syngas when gasifying Illinois #6 coal) fits well with the energy demand profile of U.S. Industry as previously discussed. A model of the gasification process integrated with the gas cleanup system was developed using ASPEN Plus™ software and mass and energy balance calculations were performed using the model. Allied Syngas Corporation an Envirotherm GmbH provided input with respect to the performance of the BGL gasifier. These

data were used to define the functional requirements of the systems, performance estimates, and conceptual specifications of end-use equipment.

Syngas leaving the gasifier, at a temperature less than 1,000°F, first passes through a water wash, close-coupled to the gasifier, to remove particulate and tars and oils, and then is further cooled in a waste heat boiler and tubular heat exchangers to a temperature meeting the specifications of low-temperature acid gas removal (AGR) systems. The tars and oils are separated from the gas liquor and reinjected into the gasifier. Because of the high efficiency of the gasifier and low syngas temperature, the low-grade energy removed from the syngas in the waste heat boiler is not sufficient for generating high pressure steam for use in the gasifier; therefore, low-pressure, saturated steam is generated and used in the waste water treatment and gas cleanup systems. A separately fired boiler, using tailgas from the gas cleanup system, supplies steam to the gasifier.

The AGR approach used with the BGL gasifier has traditionally been the Rectisol process. The Rectisol process is a physical solvent absorption process that uses methanol as the solvent and operates at very low temperatures (typically less than -80°F). This proven solution can effectively remove sulfur species as well as accommodate the hydrocarbon material contained in the raw synthesis gas. It can also deep clean CO_2 from the syngas to meet specifications for methanation and/or CO_2 sequestration. However, because it operates at such low temperatures, it requires a refrigeration unit that generates an auxiliary power load that is larger than those generated with higher temperature acid gas removal processes. Rectisol processes have operated reliably for decades behind many types of gasification processes including Lurgi, BGL, Texaco, and Shell, at installations such as Dakota Gasification in North Dakota, SASOL in South Africa, Schwarze Pumpe in Germany, Eastman in Tennessee, and Shell in the Netherlands. Information provided by Lurgi indicates that there are about 59 gasification facilities world-wide with operating Rectisol processes, representing about 53% of the total number of gasification plants (excluding Texaco natural gas partial oxidation (POX)), and that about seventy-five percent of the world's syngas produced from oil residue, coal, and wastes is purified by the Rectisol process.

In order to ensure that the use of the Rectisol Process is the best overall choice for the BGL 1000, alternative AGR solvents for application to the BGL 1000 gasifier were screened. All three of the

other commercially available AGR processes were evaluated: the Selexol Process, Ucarsol Amine Process, and Hybrid FLEXSORB SE Process. The vendors of all three processes were consulted and provided with the syngas characteristics and cleaning requirements. Results of the evaluation indicate that the Rectisol process is the best AGR approach for the reference designs because it deep cleans sulfur and CO_2 from the syngas, its solvent removes species that in other processes would segregate to the acid gas to the Claus sulfur recovery process and contaminate the sulfur product rendering it unmarketable, and hydrocarbons that are removed by its solvent can be easily separated from it and recycled to the gasifier to improve the overall system efficiency.

Approximately 95,409 lb/hr (1,145 tons/day) of Illinois #6 coal with an energy content of about 1,118 MMBtu/hr is processed in the base gasification and gas cleanup system. Approximately 158,700 lb/hr of clean syngas is produced with an energy content of about 998 MMBtu/hr, resulting in a net cold gas efficiency of about 89.3%. About 7,300 lb/hr of the syngas produced is used as fuel in a fired-boiler to generate the steam required for the gasifier and oxygen heating. About 48,053 lb/hr of 99.5% purity oxygen is used in the gasifier (0.5 oxygen to coal ratio) and about 29,158 lb/hr of steam (0.31 steam to coal ratio). An oxygen purity of 99.5% is not a requirement of the gasifier unless the syngas will be subsequently processed to produce SNG; however, oxygen suppliers have indicated that the difference in cost between 99.5% oxygen and 95% oxygen is small. Approximately 17,939 lb/hr of steam at 75 psia/309F is generated in the waste heat boiler cooling the syngas and is used in the waste water treatment and gas cleanup systems.

More detailed discussion of the base gasification and gas cleanup conceptual design is provided in Section IV.

Design Requirements Document

A Design Requirements Document (DRD) was developed for industrial size gasification Reference Plants. This document is presented as a stand-alone package in Section V, and contains Reference Plant design criteria, including weather and climate criteria, emissions and regulatory requirements, reference coal and other feed material compositions and properties, plant operating criteria, composition and quality criteria for system products, component and system design criteria, and bases for technology

selections. Some of the major requirements defined in the DRD are as follows:

- The reference plant designs will be based on the use of a single operating BGL 1000 gasifier with one spare gasifier.
- A single gas cleanup train with a single hydrogen production or SNG production train when producing these products.
- The reference plant designs are based on use of Illinois # 6 and Wyoming Wyodak PRB coals with composition and properties consistent with those identified in the U.S. DOE/NETL Quality Guidelines for Energy System Studies (QGESS).[1]
- The gasifier uses an oxidant that contains 99.5% O_2 purchased from a third party who owns and operates an air separation unit (ASU) on the site. Nitrogen, when used for purging or NOx control in the combustion turbine, is also purchased from the third party owner of the ASU.
- Tars and oils will be removed from the syngas exiting the gasifier via a water wash and recycled back into the gasifier to extinction.
- The gasification and gas cleanup system will produce a medium-Btu (ca. 350 Btu/scf) syngas suitable for use as a fuel in boilers, furnaces, or combustion turbines.
- Hydrogen produced will have a purity of 99.9% or greater.
- SNG produced will meet pipeline quality natural gas specifications.
- A Rectisol process will be used for syngas cleanup based on results of a preliminary assessment of alternative AGR technologies.
- Elemental sulfur will be produced as a byproduct in a Claus unit.
- The combustion turbine for power generation options will be selected based on matching as close as possible the fuel requirements of the combustion turbine with the output of the syngas production process, the commercial availability of the combustion turbine, and its syngas firing experience.
- Capital cost estimates (± 30%) will be based on a combination of data from WorleyParsons' in-house database and vendor budgetary estimates.
- Construction labor costs will be based on Gulf Coast non-union labor rates.

Conceptual Design and Cost Estimates

Reference Plant conceptual designs and cost estimates were developed for the following industrial applications:

Case 1 – A coal-derived syngas production plant using the BGL 1000 gasifier, with a nominal gasifier capacity of approximately 1000 MMBtu/hr of synthesis gas.

Case 1A – Illinois #6 Coal as fuel, no hydrogen production

Case 1AH - Illinois #6 Coal as fuel, with hydrogen production

Case 2B – PRB Coal as fuel, no hydrogen production

Case 2BH – PRB Coal as fuel, with hydrogen production

Case 2 – A coal-derived SNG production plant, based on the BGL 1000 gasifier, for distribution through natural gas pipelines

Case 2A – Illinois #6 Coal as fuel

Case 2B – PRB Coal as fuel

Case 3 – A gas turbine refueling configuration for a nominal 80 to 150 MWe (combined cycle equivalent) based on the Case 1 syngas configuration

Case 3A – Illinois #6 Coal as fuel

Case 3B – PRB Coal as fuel

Case 4 – A gas turbine refueling configuration for a nominal 80 to 150 MWe (combined cycle equivalent) based on the Case 2 SNG configuration

Case 4A – Illinois #6 Coal as fuel

Case 4B – PRB Coal as fuel

Summaries of the estimated performance characteristics and capital and operating and maintenance (O&M) costs for Reference Plants using Illinois #6 coal as the fuel are shown in Exhibit I-1 and Exhibit I-2, respectively. It should be noted that for multi-train BGL gasification facilities, the fixed O&M cost would be substantially reduced.

Exhibit I-1 Summary of Reference Plant Conceptual Performance Characteristics with Illinois #6 Coal

Illinois # 6 Coal	SYNGAS PRODUCTION	SYNGAS/H_2 CO-PRODUCTION	SNG PRODUCTION	SYNGAS TO POWER	SNG TO POWER (CFP)
	Case 1A	Case 1AH	Case 2A	Case 3A	Case 4A
Production Figures					
Net Syngas Product for Export[a], lb/hr	151,400	132,037	34,469	n/a	6,905
Syngas Product Energy[b], MMBtu/hr (HHV)	952	769	791	n/a	159
Hydrogen Production, lb/hr	n/a	3,019	n/a	n/a	n/a
Hydrogen Energy, MMBtu/hr (HHV)	n/a	184	n/a	n/a	n/a
CTCC Power Production[c], kWe	n/a	n/a	n/a	133,500	88,700
Elemental Sulfur Product, lb/hr	3,000	3,000	2,944	3,000	2,850
Slag Production, lb/hr	13,787	13,787	13,787	13,787	13,787
Consumption Figures					
Coal Thermal Input, MMBtu/hr (HHV)[d]	1,118	1,118	1,118	1,118	1,118
Coal Feed Flow, lb/hr	95,409	95,409	95,409	95,409	95,409
Limestone Feed Flow, lb/hr	2,442	2,442	2,442	2,442	2,442
Oxygen Flow[e], lb/hr	48,623	48,173	48,347	48,173	48,503
Steam to Gasifier[f], lb/hr	29,158	29,158	29,158	29,158	29,158
Nitrogen[g], lb/hr	4,409	4,409	n/a	135,833	n/a
Syngas for Feed Lock Purge, lb/hr	n/a	n/a	4,500	n/a	4,500
Methanol Makeup, lb/hr	30	30	50	30	50
Process Water Makeup[h], lb/hr	61,630	61,820	136,170	164,172	136,168
Cooling Water Makeup, lb/hr	55,440	55,440	131,940	248,404	353,097
Natural Gas,[i] lb/hr	140	140	0	140	0
Aux. Electric Power (excl. ASU), kWe	5,140	5,145	8,804	16,146	11,536
ASU Electric Power, kWe	9,700	9,700	9,700	9,700	9,700
ASU Cooling Water Makeup, lb/hr	27,100	27,100	27,100	27,100	27,100
Plant Equivalent Efficiency					
Fuel and Power Energy Input, MMBtu/hr	1,275[j]	1,275[j]	1,310[j]	1,222[k]	1,219[k]
Net Energy of Products[l], MMBtu/hr	952	953	791	400	422
Plant Net Thermal Efficiency, %	74.7	74.7	60.4	32.8	34.6

Note a: Total syngas from cleanup system minus syngas used in gasification system processes
Note b: Energy in product as defined in Note a.
Note c: Net power output of CT/G and ST/G. Estimates based on information that WorleyParsons has with respect to natural gas-fired and syngas-fired combustion turbines and have not been verified for the project syngas by General Electric or Pratt & Whitney.
Note d: Based on Illinois #6 coal with an as-received higher heating value of 11,714 Btu/lb
Note e: Total to gasifier, Claus furnace, and slag tap (ring) burner in SNG production cases
Note f: Produced in a tailgas/syngas fired boiler except in power production cases where steam is produced in CTCC HRSG.
Note g: For feed lock purge and diluent in combustion turbine
Note h: A detailed optimization of water recycling in the plant was not performed. An optimization study may reduce the process water makeup requirement.
Note I To slag tap (ring) burner
Note j: Coal energy plus natural gas energy plus purchased Aux. Power and ASU power expressed as thermal energy to utility power generation plant with HHV efficiency of 32.8%
Note k: Coal energy plus ASU power expressed as thermal energy to utility power generation plant with HHV efficiency of 32.8%
Note l: Energy in syngas or SNG product plus net electric power product (CTCC net power – Aux. Power) expressed in MMBtu/hr

Exhibit I-2 Summary of Reference Plant Conceptual Cost Estimates with Illinois #6 Coal

Item	Syngas	Syngas/H_2	SNG	Syngas to Power	SNG to Power (CFP)
	Case 1A	Case 1AH	Case 2	Case 3	Case 4
Capital Cost (million dollars, June 2005)[a]					
Coal & Limestone System	3.8	3.8	3.8	3.8	3.8
Syngas Production Plant	64.1	69.0	85.0	64.1	85.0
Combustion Turbine Combined Cycle Plant[b]	n/a	n/a	n/a	65.5	53.4
Balance of Plant	14.3	14.3	15.7	14.3	15.7
Buildings, Structures, & Site Improvements	2.7	2.7	2.7	2.7	2.7
Total Field Cost	84.8	89.7	107.2	150.4	160.6
Professional Services	8.48	9.0	10.7	15.0	16.1
Other Costs	4.8	4.8	5.8	8.9	9.2
Total w/o Contingency	98.0	103.4	123.7	174.3	185.9
Contingency	20.7	21.2	23.4	28.3	29.6
Total Plant Cost	**118.7**	**124.6**	**147.1**	**202.6**	**215.4**
Annual Operating and Maintenance Costs (million dollars, June 2005)					
Fixed O&M Costs	5.96	6.01	6.21	8.08	8.28
Variable O&M Costs	12.3[c]	12.4[c]	13.9[c]	11.9[c]	3.1[d]
Fuel (Coal) Cost	13.1	13.1	13.1	12.7	12.7

Note a: Excluding escalation, financing, and owner's costs such as for licenses, permits, land, etc.
Note b. Cost estimates are by WorleyParsons and not verified by General Electric or Pratt & Whitney
Note c. Includes credit for value of sulfur by-product
Note d. Includes credit for value of sulfur by-product and SNG product not used in power cycle

The base gasification and gas cleanup design is essentially the same for each of the Reference Plants. Some minor modifications were made in some cases for efficient integration with downstream syngas conversion systems or power generation systems. For example, in the SNG Production Reference Plant most of the syngas from the waste heat boiler is transported directly to a sour water-gas shift reaction system; a small portion is cooled and then used for feed lock purging instead of nitrogen to minimize the dilution of the SNG product heating value.

The indicative capital cost estimates include the cost of equipment, freight, and materials and labor for equipment installation and erection; materials and labor for construction of buildings, supporting

structures, and site improvements; engineering, construction management, and start-up services (Professional Services); Builder's all risk and general liability insurance, and project contingency. It does not include escalation or owner's costs such as legal fees, bonds and fee allowances, and permits and fees.

O&M costs include fixed costs associated with operating, maintenance, and administrative and support labor, and the variable costs associated with consumables. The consumables include oxygen and nitrogen which are purchased "over-the-fence" from a third party owner of an on-site ASU. Credit is taken for the market value of the elemental sulfur by-product. The O&M cost estimates do not reflect the annualized capital cost.

Syngas Production Reference Plant

The Syngas Production Reference Plant includes the gasification and gas cleanup systems with the base gasification and gas cleanup design and all of the major supporting systems, as shown in the sketch in Exhibit I-3. These include the coal receiving, storage, and handling systems; gas liquor separation system; waste water treatment system; cooling water system; and slag handling system. The plant gasifies about 1,118 MMBtu/hr of Illinois #6 coal to produce about 998 MMBtu/hr of medium-Btu (about 340 Btu/scf) clean syngas, of which about 46 MMBtu/hr (7,300 lb/hr) is used to generate steam for the gasification process and 952 MMBtu/hr (151,400 lb/hr) is available for use by an industrial customer. The Rectisol process is operated to maintain a sulfur content in the product syngas less than 3 ppmv (<0.3 gr/100scf), comparable to the concentrations in pipeline natural gas.

As discussed previously, the cold gas efficiency of the combined gasification and gas cleanup process (energy content of syngas from gas cleanup system divided by the energy content of the coal to the gasifier) is about 89.3%. The overall Reference Plant thermal energy efficiency, defined in accordance with the DOE QGESS, is approximately 75%. The efficiency is defined as the plant fuel product (syngas) energy content divided by the sum of the energy in the fuel to the plant (HHV basis) and the fuel energy into an electric utility generating the electric power requirements of the plant (plant auxiliary power plus ASU power required). All energies are based on the higher heating value of the fuels, and a 32.8% HHV efficiency of the electric utility plant producing the power, as specified in the DOE QGESS. All of the steam generated in the plant from waste heat is used in the plant in waste water treatment and syngas cleanup.

Exhibit I-3 Sketch Showing Major Systems Comprising the Syngas Production Reference Plant

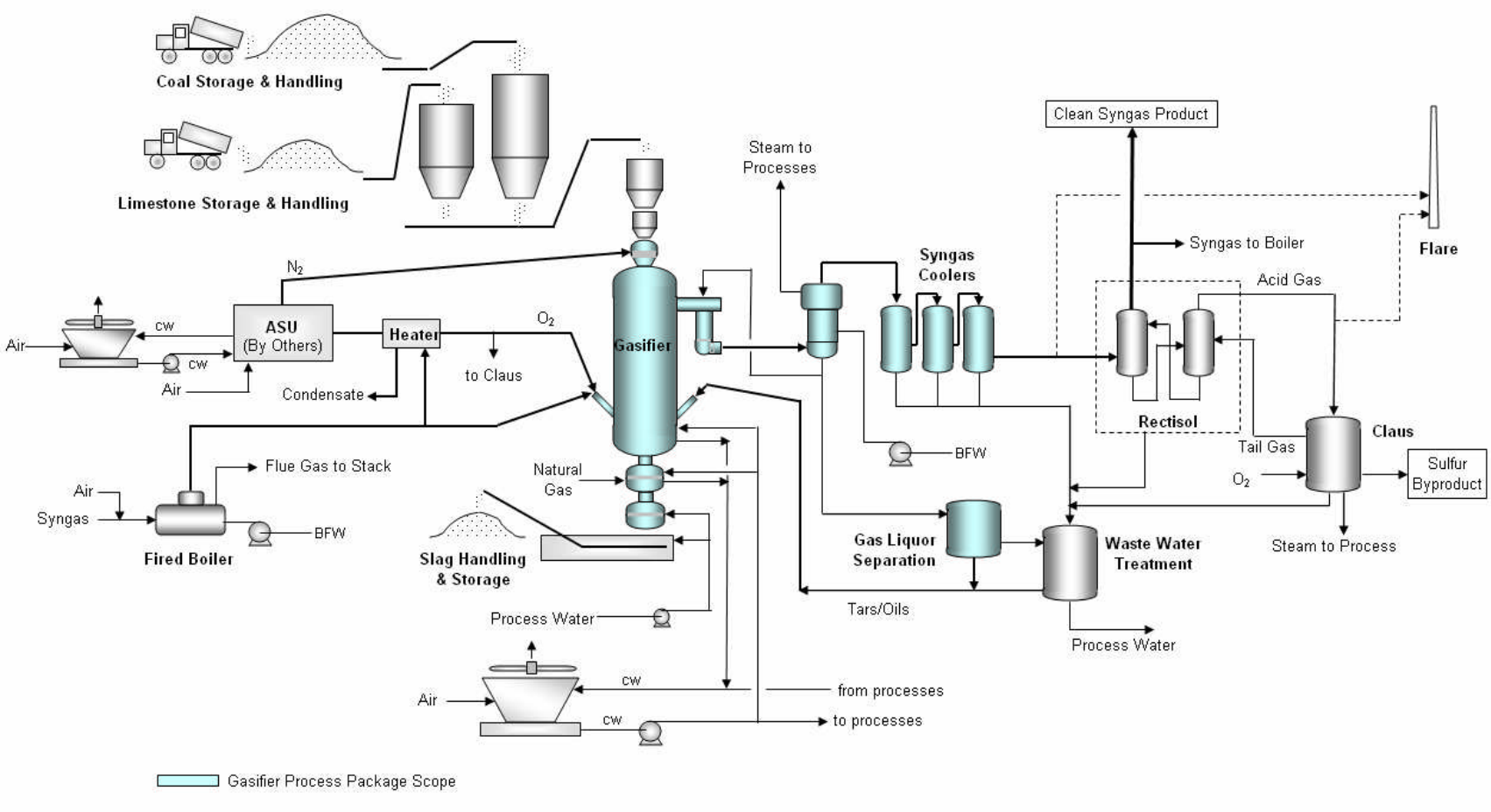

Information published by The Dakota Gasification Company indicates that the Great Plains Synfuels Plant has successfully operated 14 Lurgi gasifiers without a spare while maintaining an annual plant loading of 90% to 92%. That is, the plant annually produces from 90% to 92% of its rated output capacity.[a] Based on discussions with personnel with experience at Great Plains Synfuels Plant, Allied Syngas believes that the annual capacity factor of a syngas or SNG production plant with a single BGL gasifier will be 95% or higher.

The indicative total plant capital cost is about 119 million dollars (June 2005), or $5,200/MMBtu/day of product energy. The plant fixed annual O&M costs are estimated to be about $6 million, or about $260/MMBtu/day of export syngas product capacity. The annual non-fuel variable costs are estimated to be about $12.3 million, or about $1.55/MMBtu of export syngas product, based on a plant capacity factor of 95%. The annual fuel (coal) cost is estimated to be about $13.1 million, or about $1.65/MMBtu of syngas product. The total annual variable operating cost, including fuel cost, is thus estimated to be about $3.20/MMBtu of syngas product. If the unit fixed annual operating cost is put on an annual syngas production basis at 95% capacity factor, then the estimated total annual operating cost, fixed and variable, is about $3.95/MMBtu.

Syngas and Hydrogen Co-Production Reference Plant

The syngas produced from the base gasification and gas cleanup design contains about 30% by volume hydrogen. In the Reference Hydrogen Co-production Plant, this syngas is process through a Pressure Swing Adsorption (PSA) unit, as shown in the illustration in Exhibit I-4, that removes about 65% of the hydrogen from the syngas. The hydrogen product has a purity of about 99.9%. The remaining syngas from the PSA is also a useful fuel product with a higher heating value of about 360 Btu/scf (5,830 Btu/lb). This syngas stream can be sold to industrial customers as a fuel, or alternatively, if the site-specific situation warrants, can be fired in a boiler to generate steam for sale to a customer.

[a] The definition of “annual capacity factor” in the DOE Quality Guidelines for Energy System Studies

Exhibit I-4 Sketch of Major Systems Comprising the Syngas and H_2 Co-Production Reference Plant

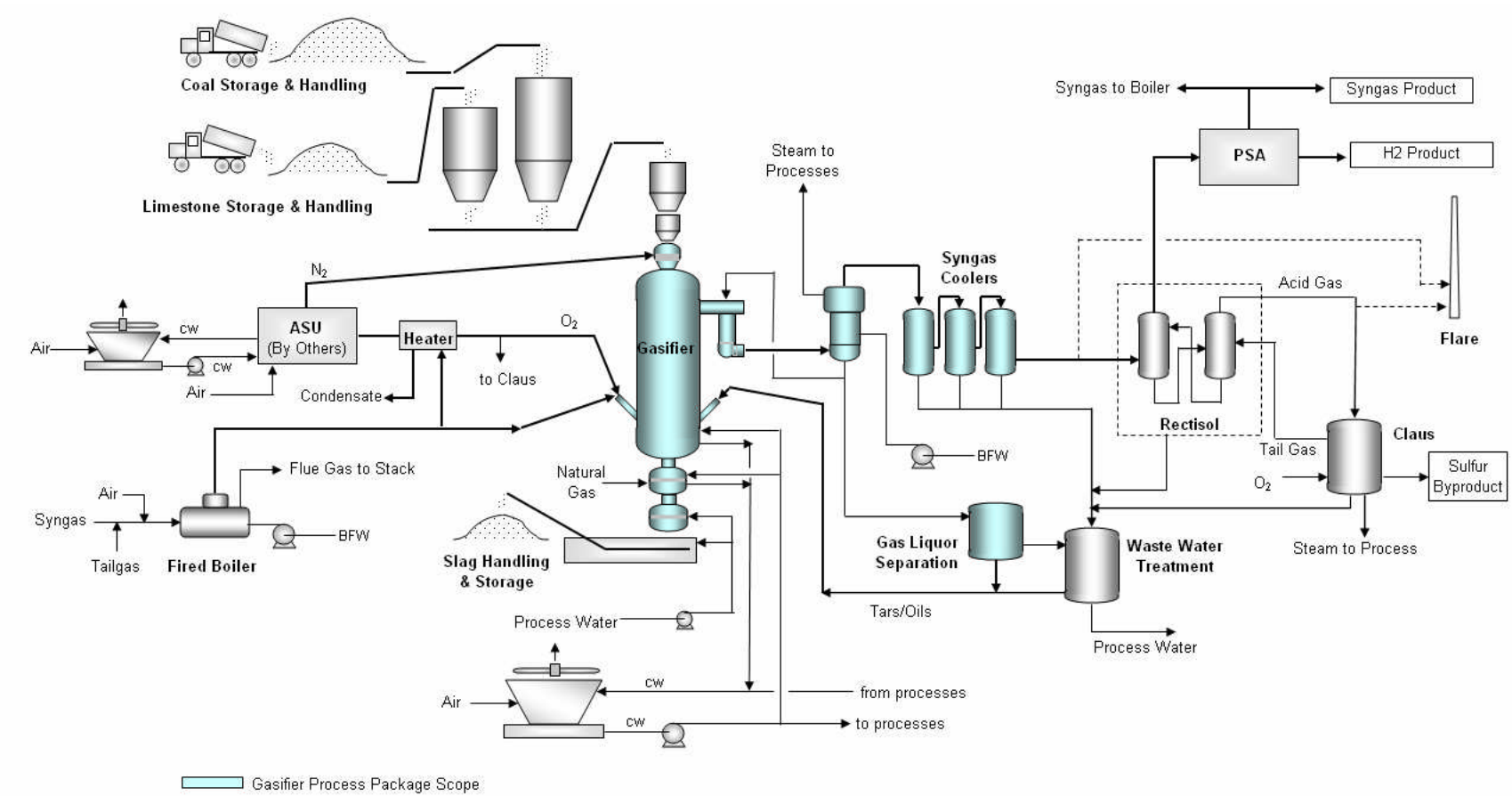

The hydrogen product contains about 19% of the 953 MMBtu/hr total plant fuel product energy, with the other 81% being in the syngas from the PSA. The overall Syngas and Hydrogen Co-Product Reference Plant thermal energy efficiency, defined in accordance with the DOE QGESS, is about 74.7%.

If the site-specific situation indicates the need for more hydrogen, a water-gas shift reaction can be added to convert CO in the syngas to H_2 prior to the PSA. The addition of a water-gas shift would increase the H_2 content of the syngas to the PSA to about 83% by volume, and the efficiency of the PSA would increase to about 85%. This would result in the H_2 being about 78% of the total plant fuel product energy and medium-Btu syngas the other 22%.

The indicative total plant capital cost is about 125 million dollars (June 2005), or $5,440/MMBtu/day of the combined energy of the syngas and hydrogen products (total fuel product). The plant fixed annual O&M costs are estimated to be about $6 million, or about $263/MMBtu/day of total fuel product capacity. The annual non-fuel variable costs are estimated to be about $12.4 million, or about $1.56/MMBtu of total fuel product, based on a plant capacity factor of 95%. The annual fuel (coal) cost is estimated to be about $13.1 million, or about $1.65/MMBtu of total fuel product. The total annual variable operating cost, including fuel cost, is thus estimated to be about $3.21/MMBtu of total fuel product. If the unit fixed annual operating cost is put on an annual fuel (syngas plus hydrogen) production basis at 95% capacity factor, then the estimated total annual operating cost, fixed and variable, is about $3.97/MMBtu.

SNG Production Reference Plant

The addition of a water-gas shift reaction system and methanation process to the base gasification and gas cleanup design, as illustrated in Exhibit I-5, allows for the production of SNG meeting pipeline quality natural gas specifications. The Reference Plant uses a sour shift reaction to increase the hydrogen concentration in a portion of the syngas from the gasifier, so that when this gas stream is mixed with the remainder of the syngas and is cleaned in the Rectisol AGR system, the cleaned syngas has the proper hydrogen to carbon ratio for methanation.

Exhibit I-5 Sketch of Major Systems Comprising SNG Production Reference Plant

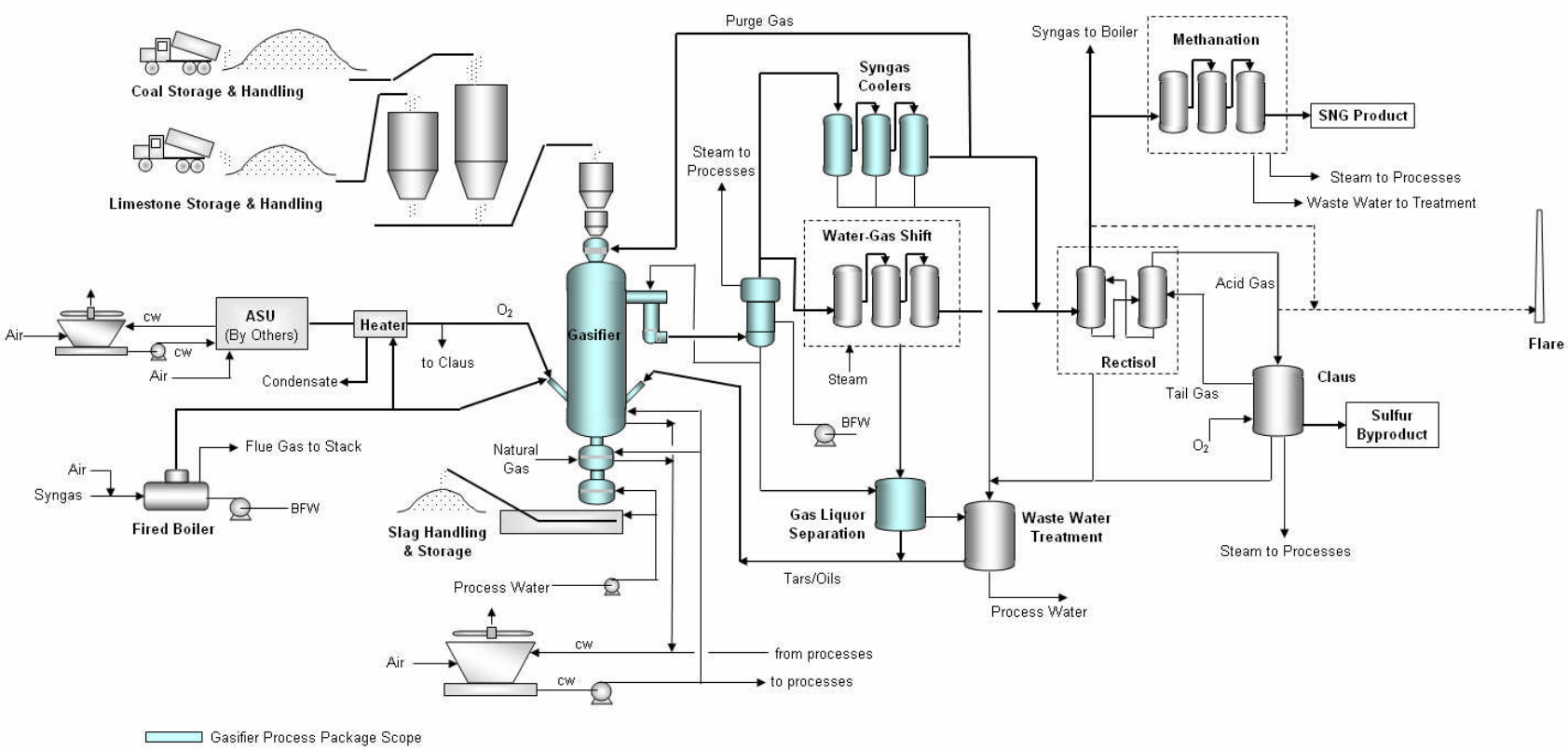

In the SNG production plant concept, the CO_2 laden tailgas from the Rectisol process is not compressed and mixed with the primary syngas stream from the process, as in the base cleanup system design, since it would dilute the SNG product. In this concept, the tailgas is used as a fuel in the fired boiler that generates steam for the gasifier and oxygen heater. Heat generated in the Methanation process is recovered in a heat recovery steam generator (HRSG) and used in the water-shift reaction system.

For SNG production, the Rectisol process is operated to maintain the sulfur concentration less than 100 ppbv to meet the specifications of the methanation catalyst.

Approximately 34,470 lb/hr of SNG with an energy content of about 791 MMBtu/hr and meeting pipeline quality natural gas specifications is produced in the Reference Plant from the 1,118 MMBtu/hr of Illinois #6 coal. The overall plant thermal efficiency, as defined previously, is about 60%.

The indicative Reference SNG Production Plant capital cost is about 147 million dollars (June 2005), or $7,740/MMBtu/day of SNG production capacity. The plant fixed annual O&M costs are estimated to be about $6.2 million, or about $327/MMBtu/day of SNG production capacity. The annual non-fuel variable costs are estimated to be about $13.9 million, about $2.12/MMBtu of SNG, based on a plant capacity factor of 95%. The annual fuel (coal) cost is estimated to be about $13.1 million, or about $1.99/MMBtu of SNG. The total annual variable operating cost, including fuel cost, is thus estimated to be about $4.11/MMBtu of SNG. If the unit fixed annual operating cost is put on an annual SNG production basis at 95% plant capacity factor, then the estimated total annual operating cost, fixed and variable, is about $5.05/MMBtu.

Syngas to Power Reference Plant

One potential application of industrial gasification is refueling of natural gas fired combustion turbines in industrial facilities. A Reference Plant conceptual design for syngas refueling of a GE 6FA combustion turbine combined cycle using the base gasification and cleanup design was developed and evaluated with respect to performance and cost.[b] The GE 6FA combustion turbine was

[b] Performance and cost estimates are based on information that WorleyParsons has on GE 6FA performance when firing syngas and have not been verified by General Electric for the specific reference plant syngas.

selected for the Reference Plant because its syngas fuel requirement matches closely with the syngas production from the base gasification and cleanup design, and because of the combustion turbine's syngas firing experience.

In the Reference Plant design, 93% of the clean syngas produced is mixed with CO-rich tailgas from the Rectisol process and used as fuel in the combustion turbine. Nitrogen from the ASU plant is used as a diluent in the combustion turbine for NOx control. The combustion turbine exhaust is routed to a heat recovery steam generator (HRSG). The remainder of the syngas produced by the gasification process is introduced into a duct burner in the HRSG to increase the steam generation capacity of the HRSG. Steam from the HRSG is used in the gasifier and oxygen heater, as well as for power generation in the steam turbine/generator.

The Reference Plant combined cycle power system produces about 133,500 kWe of net electrical power.[c] After accounting for the 16,146 kWe of plant auxiliary power requirements, excluding the ASU power requirement, the net plant power output capacity to the industrial user is about 117,354 KWe. Accounting for the ASU power requirement as an "indirect fuel" input (since oxygen and nitrogen are purchased from the ASU owner) along with the coal "direct fuel" input, the overall plant thermal efficiency is about 32.8%. It should be emphasized that this is an industrial application of gasification technology, with a nominal 1,000 MMBtu/hr gasification system fueling a single small combustion turbine combined cycle, and the efficiency should not be compared with that projected for large, utility-scale Integrated Gasification Combined Cycles (IGCC). The efficiency of the GE 6FA combustion turbine has a lower simple cycle heat rate than the large GE 7FA or B combustion turbines being considered for utility IGCC applications. Additionally, the small steam turbine cycle size (about 42MWe) associated with the industrial size plant is a non-reheat, moderate pressure (1,265 psia/950°F) cycle compared to the high pressure, reheat steam turbines being considered for the large utility IGCC applications (2,400 psia/1,000°F/1,000°F), and thus has a significantly lower steam cycle efficiency than the large utility IGCC cycles. It is expected that when the syngas production plant (with an annual capacity factor of 95%) is combined with the combustion turbine

[c] Performance and cost estimates are based on WorleyParsons analyses and have not been verified by General Electric.

combined cycle plant, the overall annual plant capacity factor for syngas-fired power generation is expected to be about 92%.

The indicative capital cost of the Reference Plant is estimated to be about $203 million (June 2005), about $1,730/kWe net.[c] The plant fixed annual O&M costs are estimated to be about $8.1 million, or about $69/kWe net. The annual non-fuel variable costs are estimated to be about $11.9 million, about $0.013/kWh net, based on an annual plant capacity factor of 92%. The annual fuel (coal) cost is estimated to be about $12.7 million, or about $0.013/kWh. The total annual variable operating cost, including fuel cost, is thus estimated to be about $0.026/kWh.

SNG to Power Reference Plant

Another potential application of industrial gasification is refueling of combustion turbines in industrial facilities with coal-derived SNG. A Reference Plant conceptual design for SNG refueling of a Pratt & Whitney (P&W) FT8 TwinPac combined cycle, using the SNG Production Reference Plant previously described as a basis, was developed and evaluated with respect to performance and cost.[d] The FT8 TwinPac combined cycle consists of two FT8 combustion turbines, one HRSG, and one steam turbine/generator. The FT8 TwinPac was selected for the Reference Plant because its natural gas fuel requirement most closely matches the SNG production capacity of the SNG Production Reference Plant, and information available on gas turbines in U.S. industrial facilities indicates that there are a significant number of FT8s in these facilities.

Actually, about 80% of the SNG produced is used as fuel in the combustion turbine combined cycle system. About 64% of the SNG produced is used as fuel in the combustion turbine itself. The combustion turbines' exhaust is routed to the duct burner section of the HRSG where 16% of the SNG produced and tailgas from the Rectisol is introduced as supplemental fuel. The HRSG generates steam for the gasifier, oxygen heater, and the steam turbine/generator. The Rectisol tail gas is burned in the duct burner because it is unusable in the gas turbine or methanation process. Supplemental firing of the HRSG with SNG and tailgas enhances the amount of superheat energy available to steam production. The high efficiency of the FT8 aeroderivative gas turbine results in the gas

[d] Performance and cost estimates are based on WorleyParsons analyses and at have not been verified by Pratt & Whitney.

turbine exhaust being lower in temperature than non-aeroderivative turbines, and thus, without supplemental firing of the HRSG would result in a lower steam superheat temperature and lower steam turbine cycle efficiency. The remaining 20% of the SNG produced that is not used in the combined cycle power system is available for sale to the industrial customer; that is, the Reference Plant co-produces fuel and power (CFP).

As for the syngas to power plant, the overall SNG to Power Reference Plant annual plant capacity factor for SNG-fired power generation is expected to be about 92%.

The Reference Plant combined cycle power system produces about 88,700 kWe of net electrical power.[d] After accounting for the estimated 11,536 MWe of plant auxiliary power requirements, excluding the ASU power requirement, the net plant power output capacity to the industrial user is about 77,164 KWe, along with 159 MMBtu/hr of SNG product. Accounting for the ASU power requirement as an "indirect fuel" input along with the coal "direct fuel" input, the overall plant thermal efficiency is about 34.6%.

The indicative capital cost of the SNG to Power Reference Plant is estimated to be about $215 million (June 2005), about $2,800/kWe net.[e] The plant fixed annual O&M costs are estimated to be about $8.3 million, about $107.3/kWe net. The annual non-fuel variable costs are estimated to be about $3.1 million, about $0.005/kWh net, based on an annual plant capacity factor of 92%, after credit is taken for the value of the SNG product at a value of $7/MMBtu, the same value assumed for the price of purchased natural gas. The annual fuel (coal) cost is estimated to be about $12.7 million, about $0.02/kWh.

Details of the conceptual designs and cost estimates for the Reference Plants are presented as stand-alone packages in Sections VI through X.

[e] Performance and cost estimates are based on WorleyParsons analyses and at have not been verified by Pratt & Whitney

Impact of PRB Coal on Reference Plant Design, Performance, and Cost

The major impacts of using PRB coal on the plant designs previously discussed based on Illinois #6 coal include the following:

- For a gasifier (BGL 1000) of the same physical size, the coal throughput with PRB coal is about 10% less than the throughput with Illinois #6 coal due to the higher moisture content of the PRB coal. That, combined with the lower heating value of the PRB coal, results in lower product gas mass and energy throughput and thus somewhat smaller cleanup system sizes.
- The low sulfur content of the PRB coal results in elemental sulfur production rates (based on a single BGL gasifier system) below that which makes a Claus system economical. A LO-CAT elemental sulfur production process was assumed as a basis for the evaluations performed with PRB coal although there may be other processes that could be used, such as the CrystaSulf process, the performance and economics of which should be compared with the LO-CAT process in the future.
- The energy content of the syngas produced from PRB coal in a single BGL gasifier is not sufficient to fuel a GE6FA gas turbine combined cycle as was used in the Illinois #6 Syngas to Power Reference Plant case. The syngas quantity and energy appears to be sufficient to fuel a combined cycle equivalent in capacity to a Pratt & Whitney FT8 Twin Pack combined cycle system.
- The estimated flow and energy content of SNG produced from a single BGL gasifier from PRB coal appears to be just sufficient to fuel a P&W FT8 Twin Pack based combined cycle with no excess SNG product. Whereas, in the Illinois #6 coal Reference Plant, excess SNG was available making that Reference Plant a combined fuel and power production plant.
- More attention must be paid to dust suppression and control with PRB coal because of its propensity to produce more dust during processing and its higher reactivity relative to Illinois #6 coal.

A summary of the performance characteristics and capital and O&M costs for the Reference Plants using PRB coal as the fuel are presented in Exhibit I-6 and Exhibit I-7. The costs were estimated based on the same criteria and assumptions as were the Illinois #6 coal reference plant cases, except for the delivered cost of fuel, which was assumed to be about $17.75/ton ($1.00/MMBtu) for PRB coal.

Exhibit I-6 Summary of Reference Plant Conceptual Performance Characteristics with PRB Coal

Wyodak Anderson PRB Coal	SYNGAS PRODUCTION	SYNGAS/H_2 CO-PRODUCTION	SNG PRODUCTION	SYNGAS TO POWER	SNG TO POWER
	Case 1B	Case 1BH	Case 2B	Case 3B	Case 4B
Production Figures					
Net Syngas Product for Export[a], lb/hr	91,524	89,824	23,020	n/a	n/a
Syngas Product Energy[b], MMBtu/hr (HHV)	636	533	533	n/a	n/a
Hydrogen Production, lb/hr	n/a	1,700	n/a	n/a	n/a
Hydrogen Energy, MMBtu/hr (HHV)	n/a	103	n/a	n/a	n/a
CTCC Power Production[c], kWe	n/a	n/a	n/a	87,400	73,000
Elemental Sulfur Product, lb/hr	262	262	262	262	262
Slag Production, lb/hr	7,751	7,751	7,751	7,751	7,751
Consumption Figures					
Coal Thermal Input, MMBtu/hr (HHV)[d]	760	760	760	760	760
Coal Feed Flow, lb/hr	85,686	85,686	85,686	85,686	85,686
Limestone Feed Flow, lb/hr	1,182	1,182	1,182	1,182	1,182
Oxygen Flow[e], lb/hr	32,130	32,130	32,130	32,130	32,130
Steam to Gasifier[f], lb/hr	18,312	18,312	18,312	18,312	18,312
Nitrogen[g], lb/hr	2,910	2,910	n/a	80,425	n/a
Syngas for Feed Lock Purge, lb/hr	n/a	n/a	2,970	n/a	2,970
Methanol Makeup, lb/hr	30	30	50	30	50
Process Water Makeup[h], lb/hr	22,230	22,345	86,237	84,482	88,338
Cooling Water Makeup, lb/hr	52,440	52,440	96,636	175,675	240,553
Natural Gas,[i] lb/hr	140	140	0	140	0
Aux. Electric Power (excl. ASU), kWe	4,066	4,071	6,652	10,617	8,454
ASU Electric Power, kWe	6,500	6,500	6,500	6,500	6,500
ASU Cooling Water Makeup, lb/hr	18,130	18,130	18,130	18,130	18,130
Plant Equivalent Efficiency					
Fuel and Power Energy Input, MMBtu/hr	873[j]	873[j]	897[j]	831[k]	828[k]
Net Energy of Products[l], MMBtu/hr	636	636	533	262	220
Plant Net Thermal Efficiency, %	72.8	72.8	59.4	31.5	26.6

Note a: Total syngas from cleanup system minus syngas used in gasification system processes
Note b: Energy in product as defined in Note a.
Note c: Net power output of CT/G and ST/G. Estimates based on information that WorleyParsons has with respect to natural gas-fired and syngas-fired combustion turbines and have not been verified for the project syngas by vendors.
Note d: Based on Wyodak Anderson PRB coal with an as-received higher heating value of 8,875 Btu/lb.
Note e: Total to gasifier and slag tap (ring) burner in SNG production cases
Note f: Produced in a tailgas/syngas fired boiler except power production cases where steam is produced in CTCC HRSG.
Note g: For feed lock purge and diluent in combustion turbine
Note h: A detailed optimization of water recycling in the plant was not performed. An optimization study may reduce the process water makeup requirement.
Note I To slag tap (ring) burner
Note j: Coal energy plus natural gas energy plus purchased Aux. Power and ASU power expressed as thermal energy to utility power generation plant with HHV efficiency of 32.8%
Note k: Coal energy plus ASU power expressed as thermal energy to utility power generation plant with HHV efficiency of 32.8%
Note l: Energy in syngas, SNG, or net electric power product (CTCC net power – Aux. Power) expressed in MMBtu/hr

Exhibit I-7 Summary of Reference Plant Conceptual Cost Estimates with PRB Coal

Wyodak Anderson PRB Coal	**Syngas**	**Syngas/H_2**	**SNG**	**Syngas to Power**	**SNG to Power**
	Case 1B	Case 1BH	Case 2B	Case 3B	Case 4B
Capital Cost (million dollars, June 2005)[a]					
Coal & Limestone System	3.2	3.2	3.2	3.2	3.2
Syngas Production Plant	54.6	59.4	77.4	50.0	72.9
Combustion Turbine Combined Cycle Plant[b]	n/a	n/a	n/a	57.8	53.4
Balance of Plant	12.8	12.8	14.8	14.8	15.3
Buildings, Structures, & Site Improvements	2.5	2.5	2.5	2.5	2.5
Total Field Cost	73.1	78.0	97.9	128.4	147.3
Professional Services	7.3	7.8	9.8	12.8	14.7
Other Costs	4.0	4.3	5.4	7.3	8.6
Total w/o Contingency	84.4	90.1	113.1	148.5	170.7
Contingency	16.9	17.4	21.0	23.0	26.7
Total Plant Cost	**101.3**	**107.5**	**134.1**	**171.5**	**197.4**
Total Plant Cost, $/MMBtu/day product	6,640	7040	10,540	n/a	n/a
Total Plant Cost, $/kWe net product	n/a	n/a	n/a	2,240	3,040
Annual Operating and Maintenance Costs (million dollars, June 2005)					
Fixed O&M Costs	5.8	5.9	6.1	7.9	8.1
Variable O&M Costs[b]	9.2	9.1	10.3	8.9	9.1
Fuel (Coal) Cost	6.3	6.3	6.3	6.1	6.1
Fixed O&M Costs, $/MMBtu product	1.10	1.11	1.37	n/a	n/a
Variable O&M Costs[b], $/MMBtu product	1.73	1.73	2.32	n/a	n/a
Fuel (Coal) Cost, $/MMBtu product	1.20	1.20	1.43	n/a	n/a
Fixed O&M Costs, $/kWe net product	n/a	n/a	n/a	103	126
Variable O&M Costs[c], $/kWh net product	n/a	n/a	n/a	0.014	0.018
Fuel (Coal) Cost, $/kWh net product	n/a	n/a	n/a	0.010	0.012

Note a: Excluding escalation, financing, and owner's costs such as for licenses, permits, land, etc.
Note b. Cost estimates are by WorleyParsons and not verified by vendors
Note c. Includes credit for value of sulfur by-product

The absolute capital costs (2005 dollars) are somewhat lower for the PRB coal cases than the Illinois#6 coal cases because of the lower throughput of the system. However, because of the lower energy content of the coal and resulting product, the capital cost per unit of product energy per day is higher for the PRB coal cases.

The fixed annual operating and maintenance costs for the PRB coal cases are expected to be similar to those for the reference cases using Illinois #6 coal; therefore, on a per unit of product energy basis, they would be higher. The variable operating costs excluding fuel costs are estimated to be higher, on a per unit of product energy basis, for the PRB coal cases. With the lower fuel cost, the net result is that on a per unit of product energy basis, the total annual O&M costs, including fixed, variable, and fuel, are estimated to be about the same for the PRB coal cases as for the Illinois #6 coal cases.

Potential Environmental Impact and Applicable Environmental Regulations

There are three perspectives from which to assess the potential impact and applicable environmental regulations with respect to industrial gasification: 1) the operations of a new coal gasification based syngas or SNG production facility supplying fuel to industrial customers, 2) the operations of a new coal gasification based syngas or SNG production facility integrated with a combustion turbine combined cycle system for industrial power generation, and 3) the industrial end-user of syngas or SNG produced from coal gasification and the requirements associated with fuel switching.

The potential sources of air emissions from the syngas and SNG production facilities include the coal storage and transport systems and the syngas-fired boiler generating steam for the gasifier and oxygen heater. In the Reference Plants, the syngas-fired boiler is small, with a fuel thermal input of about 46 MMBtu/hr, and thus is not expected to be a source of significant emissions. In the combustion turbine refueling applications, the potential sources of air emissions include the coal storage and transport systems, and the exhaust from the HRSG in the combustion turbine combined cycle system.

The evaluation of the emission requirements applicable to combustion units firing synthetic gas (syngas) produced by coal gasification started with a review of New Source Performance Standards (NSPS). However, permitting a new plant with emissions controlled to NSPS requirements will probably not be acceptable to the EPA and/or individual states, who will require at least Best

Available Control Technology (BACT) as specified in the Prevention of Significant Deterioration of Air Quality (PSD) regulations for areas meeting ambient air quality standards, or Lowest Achievable Emission Rate (LAER) technology as specified in the New Source Review (NSR) regulations for areas not meeting ambient air quality standards. It is anticipated that the syngas and SNG production plants with and without combustion turbine combined cycles will be able to meet applicable regulatory emissions limits.

Potential industrial customers are probably not currently permitted to burn syngas as a fuel, and thus will have to go through some type of permitting process. If the refueling will not result in significant emissions increases, as defined in 40CFR52.21, then the repermitting process will be relatively simple, taking on the order of three to six months. If the refueling will result in significant emissions increases, then the combustion unit will be subject to New Source Review (NSR), including Prevention of Significant Deterioration (PSD) and non-attainment NSR. The repermitting process will then be more complicated, and will likely take nine to eighteen months, at a significantly higher cost. The types of activities that will probably be required if significant increases in emissions are expected include:

- Collection of on-site meteorological data
- Ambient air quality monitoring
- Air quality dispersion modeling
- Installation of BACT (if in an attainment area) or LAER (if in a non-attainment area) technology
- Purchase of emissions reductions credits if in a non-attainment area

With the use of the Rectisol process for acid gas removal in the syngas production facility, it is not expected that an industrial user's hourly or annual emissions would increase significantly, if at all, relative to those of the equipment fired with natural gas.

II INDUSTRY ENERGY DEMAND PROFILE

This section discusses the results of an evaluation of the needs of potential industrial customers with respect to energy demand, reliability, and environmental constraints. Overall, The U.S. Department of Energy, Energy Information Administration (DOE/EIA) estimates that U.S. Industry will consume about 7,500 trillion Btu of natural gas in 2006, or about 36% of the total U.S. annual consumption.[2] Published data indicate that there is significant consumption by Industry in all regions of the U.S., although slightly over 50% is consumed in the South region.

Data in the DOE/EIA 2002 Manufacturing Energy Consumption Survey (MECS database) indicates that U.S. Industry consumes about 964,112 gigawatt-hours (GWh) of electrical energy annually. This represents about 26% of the total national electric energy consumption. The data also indicates that U.S. Industry generates about 134,268 GWh of electric power annual on-site from an on-site electric generating capacity of about 15.3 GW. About 67% of the capacity and generation is by plants in the South region with the remainder split about evenly by Industry in the Midwest, West, and Northeast regions.

A review of the data in IHS Inc.'s 2005 Major Industrial Plants Database (MIPD) indicates that there are a large number of industrial plants listed in the database whose natural gas energy consumption is equal to or greater than the output of a single BGL 1000 gasifier. About 135 plants have a natural gas consumption rate between 500 MMBtu/hr (about the SNG output of a single BGL 1000 gasifier using PRB coal) and 2,000 MMBtu/hr (about the output of 2 BGL 1000 gasifiers using Illinois #6 coal). About 140 plants in the database have natural gas consumption rates between 250 MMBtu/hr and 500 MMBtu/hr. Less than 20% of the industrial plants in the database natural gas consumption rates of 2000 MMBtu/hr or more. Much of the emphasis in commercial implementation of coal gasification in the U.S. to date has been in utility IGCC plants with gasifiers that have single unit capacities on the order of 2,000 MMBtu/hr or more.

Discussions with industrial gas suppliers and potential industrial customers have indicated that in general, industrial plants have high

availabilities and require fuel supply reliability near 100%. Some plants, such as those in the steel industry, have a large number of burners, and conversion of all burners to syngas firing or dual syngas/natural gas firing may involve major capital investment and/or operational modifications. These plants would likely be best served by a coal gasification facility producing substitute natural gas (SNG) rather than syngas.

A major concern of potential industrial customers is the impact that refueling from natural gas to coal-derived syngas will have on their gaseous emissions and how it will affect their air quality permits. Potential customers do not want to increase either their hourly emissions or significantly increase their annual emissions because it may require that they add pollution control equipment to meet New Source Performance Standards (NSPS), National Emissions Standards for Hazardous Air Pollutants (NESHAP), Best Available Control Technology (BACT), or Lowest Achievable Emission Rates (LAER) requirements. Potentially emissions of sulfur dioxide and mercury will likely be of most concern since it is anticipated that particulate matter, NOx, and CO emissions will be similar to those from natural gas combustion.

The significant natural gas and electric energy demand by U.S. Industry, the high and unstable price history of natural gas, the high availability of industrial plants, and environmental concerns of industry show the need for a reliable, industrial size coal gasification system to produce a clean gaseous fuel while taking advantage of the abundant coal supplies and relatively stable coal prices in the U.S. Additionally, the widespread distribution of energy intensive industries across the U.S. indicates the need for a gasification system with fuel flexibility that can utilize local coals and other local fuels of opportunity. The following sections provide more details with respect to the energy demand profile of U.S. industries.

II.1 U.S. INDUSTRY NATURAL GAS CONSUMPTION

The most recent manufacturing energy consumption survey (MECS) data published by the U. S. Department of Energy (DOE), Energy Information Administration (EIA), are the results of the 2002 EIA MECS representing the 2001 reporting year[3]. These data indicate that the annual natural gas consumption by U. S. Industry was about 6,468 trillion Btu for all purposes with about 90% of that (5,794 trillion Btu) consumed as fuel. The EIA 2004 Annual Energy Review[4] data indicate that in 2001, U.S. Industry natural gas consumption represented about 33% of the total U.S. natural gas

consumption. The EIA estimates that natural gas consumption by U.S. Industry will total about 7,500 trillion Btu in 2006 (about 36% of total U.S. consumption) and will increase to about 8,500 trillion Btu in 2020 (about 33% of total U.S. consumption)[5].

Industry Natural Gas Consumption by Region and Industry Sector

The distribution of total industrial natural gas consumption as fuel by region is illustrated in Exhibit II-1 based on the DOE/EIA 2002 MECS. Slightly over 50% of the consumption is by industry in the South Region. About 26% is consumed by industry in the Mid-West Region, about 12% in the West, and 9% in the Northeast.

U.S. chemical industries consumed the largest percentage of natural gas as fuel, about 28%, as shown in Exhibit II-2. The petroleum and coal products sector consumes about 15%, primary metals about 12%, the food sector about 10%, paper about 9%, non-metallic mineral products about 7%, and fabricated metal products about 4%, with other sectors totaling about 15%.

Exhibit II-1 U.S. Industry Natural Gas Consumption as Fuel by Region

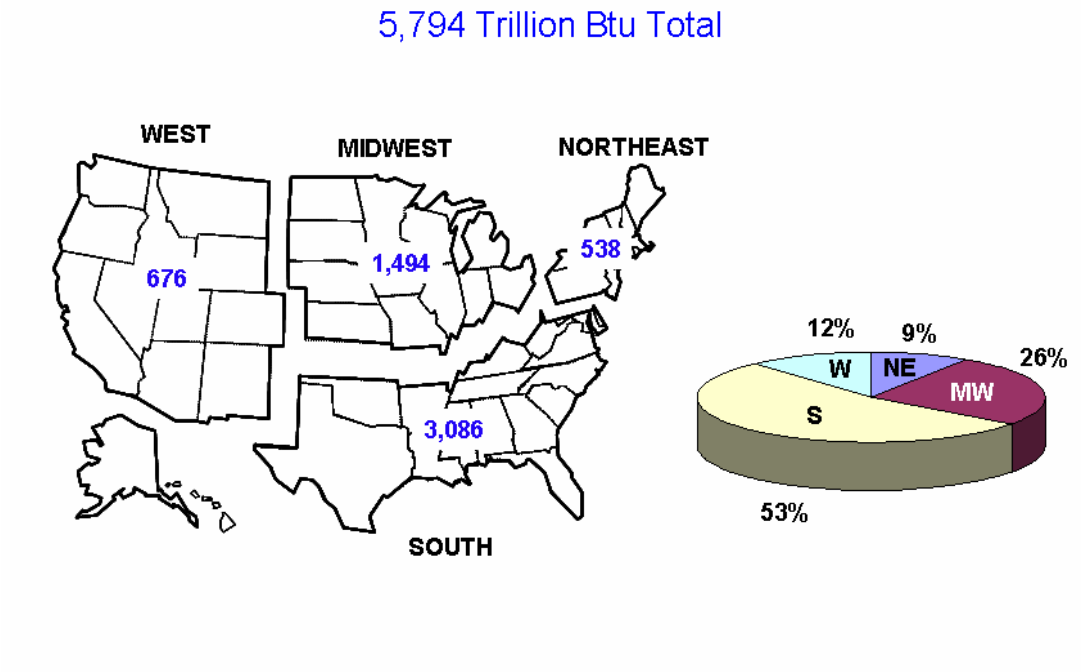

Data Source: DOE/EIA/MECS 2002 Data http://www.eia.doe.gov/emeu/mecs/mecs2002/shelltables.html

Exhibit II-2 U.S. Industry Natural Gas Consumption as Fuel by Sector

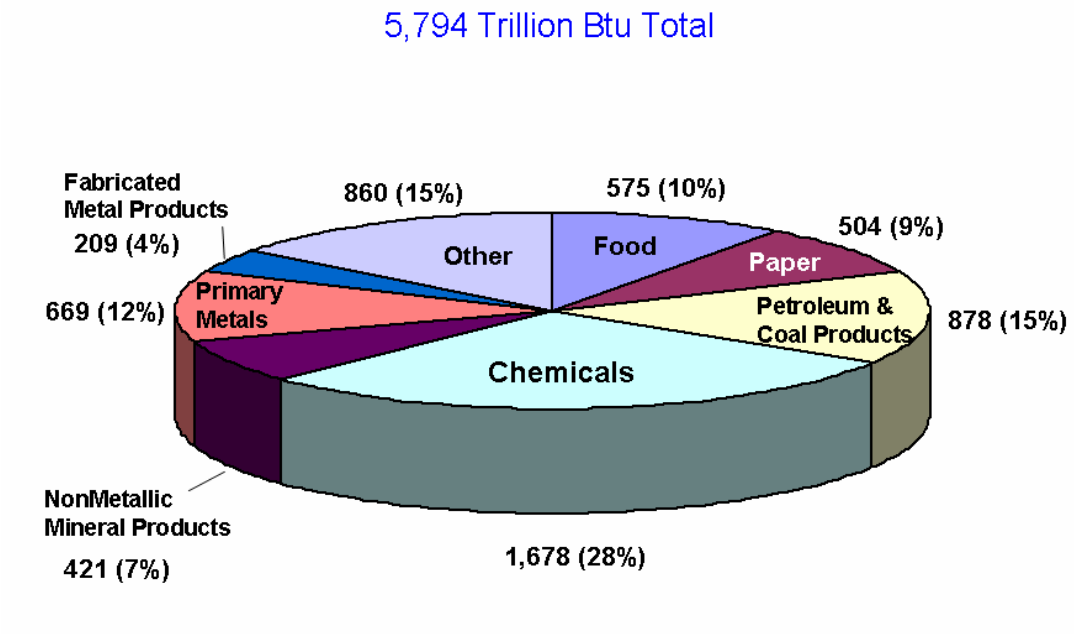

Data Source: DOE/EIA/MECS 2002 Data http://www.eia.doe.gov/emeu/mecs/mecs2002/shelltables.html

The distribution of natural gas consumption for all purposes and as fuel by region for each major industrial sector is illustrated in Exhibit II-3 through Exhibit II-9. A summary of the consumption distribution is as follows:

- Chemical: About 80% of the natural gas consumption is in the South region.
- Petroleum and Coal Products: About 64% of the natural gas consumption is in the South region.
- Primary Metals: About 52% of the natural gas consumption is in the Mid-West region, and about 33% in the South region.
- Food: About 43% of the natural gas consumption is in the Mid-West region, and about 29% in the South region.
- Paper: About 48% of the natural gas consumption is in the South region.
- Nonmetallic Mineral Products: About 44% of the natural gas consumption is in the South region, and about 27% in the Midwest region.
- Fabricated Metal Products: About 48% of the natural gas consumption is in the Midwest region, and about 31% in the South region.

Exhibit II-3 Natural Gas Consumption by the U.S Chemical Industry

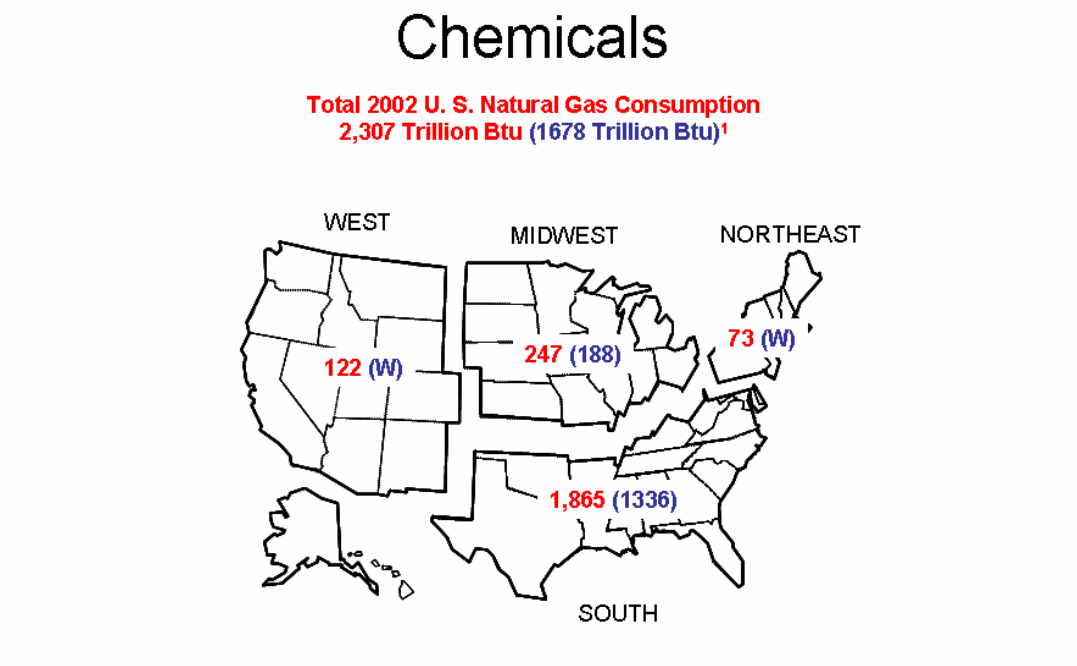

1. MECS 2002 Data http://www.eia.doe.gov/emeu/mecs/mecs2002/shelltables.html
2. Values outside of parentheses are reported as consumption for all purposes. Values in parentheses are for reported as consumption as fuel.
3. W denotes that EIA withheld data to avoid disclosure of individual establishments

Exhibit II-4 Natural Gas Consumption by the U.S. Petroleum and Coal Products Industry

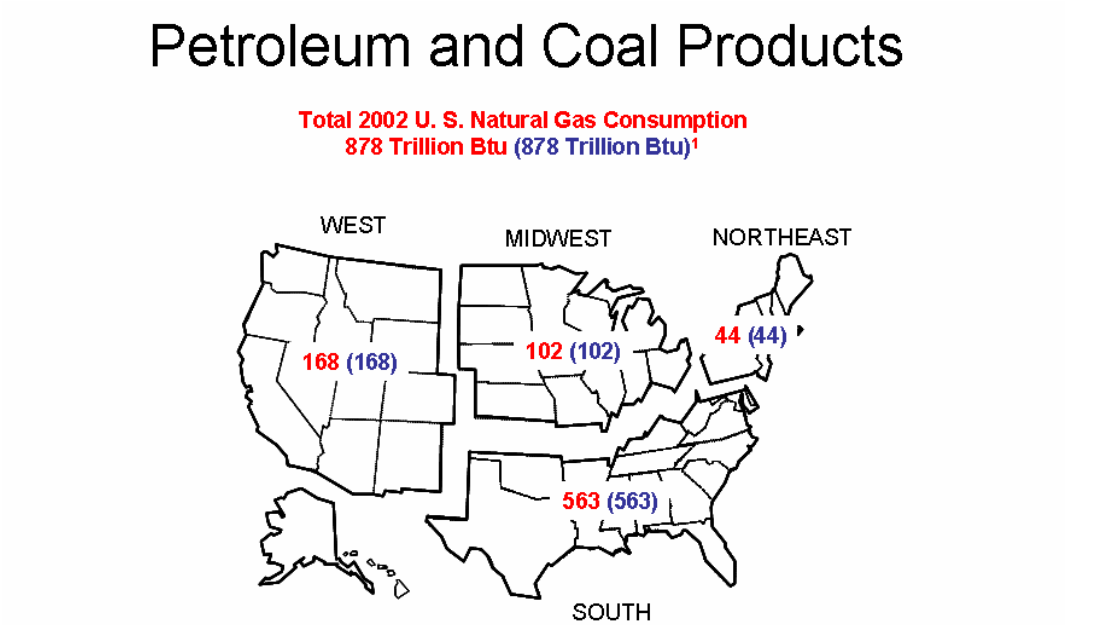

1. MECS 2002 Data http://www.eia.doe.gov/emeu/mecs/mecs2002/shelltables.html
2. Values outside of parentheses are reported as consumption for all purposes. Values in parentheses are for reported as consumption as fuel.
3. W denotes that EIA withheld data to avoid disclosure of individual establishments

Exhibit II-5 Natural Gas Consumption by the U.S Primary Metals Industry

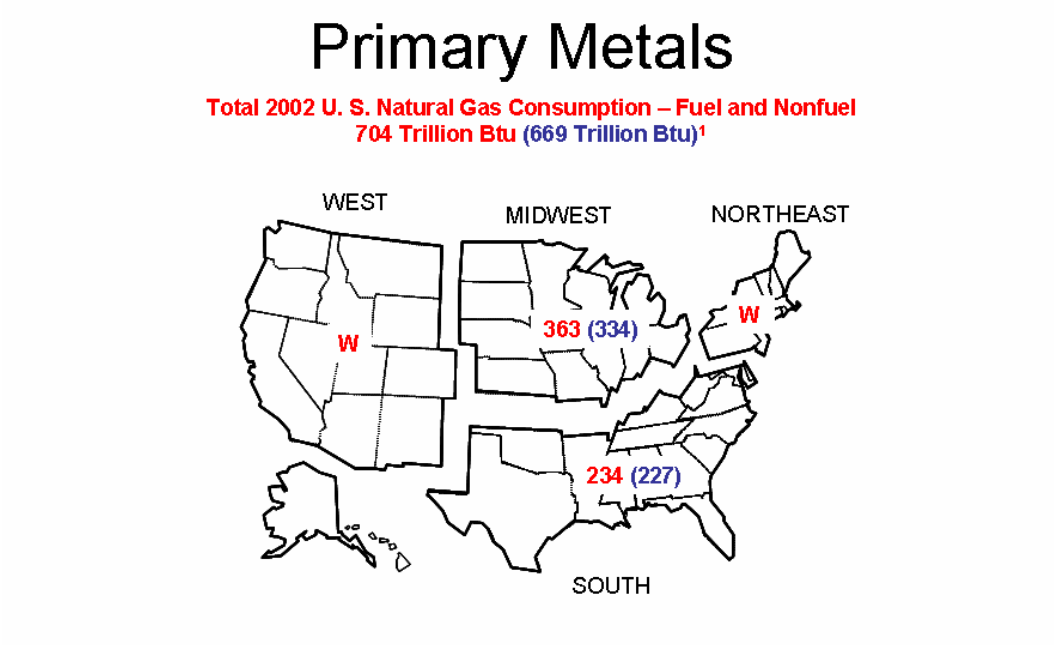

1. MECS 2002 Data http://www.eia.doe.gov/emeu/mecs/mecs2002/shelltables.html
2. Values outside of parentheses are reported as consumption for all purposes. Values in parentheses are for reported as consumption as fuel.
3. W denotes that EIA withheld data to avoid disclosure of individual establishments

Exhibit II-6 Natural Gas Consumption by the U.S Food Industry

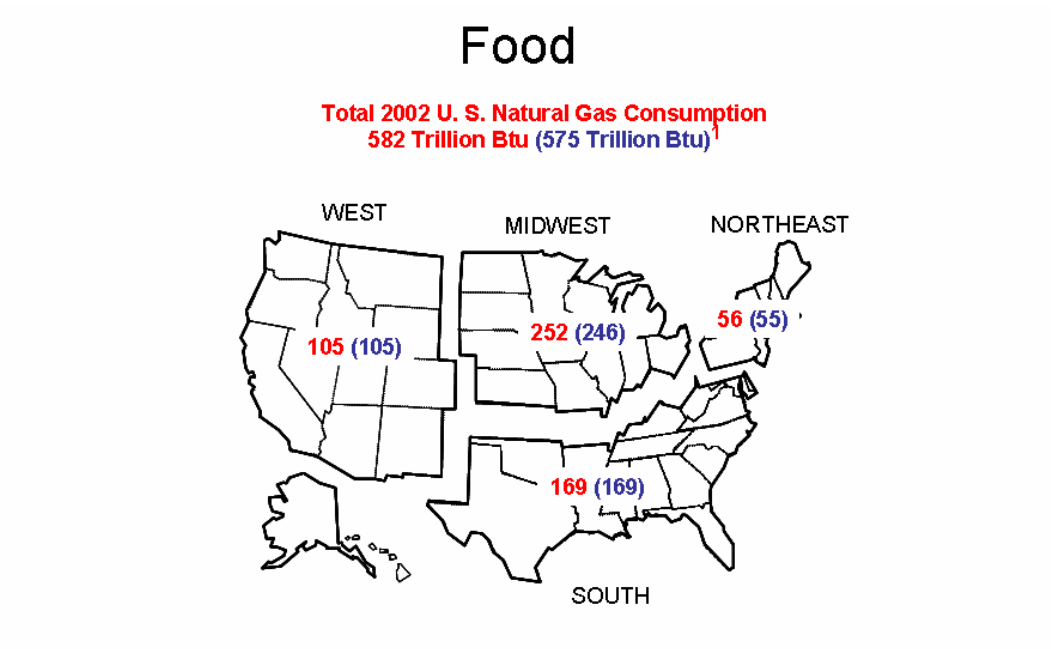

1. MECS 2002 Data http://www.eia.doe.gov/emeu/mecs/mecs2002/shelltables.html
2. Values outside of parentheses are reported as consumption for all purposes. Values in parentheses are for reported as consumption as fuel.

Exhibit II-7 Natural Gas Consumption by the U.S Paper Industry

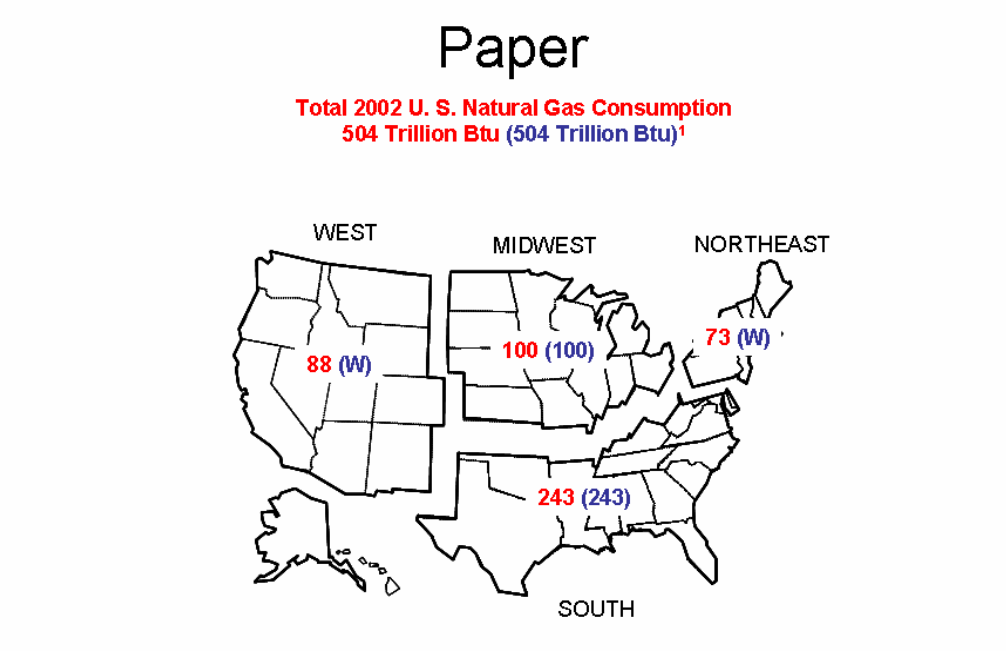

1. MECS 2002 Data http://www.eia.doe.gov/emeu/mecs/mecs2002/shelltables.html
2. Values outside of parentheses are reported as consumption for all purposes. Values in parentheses are for reported as consumption as fuel.
3. W denotes that EIA withheld data to avoid disclosure of individual establishments

Exhibit II-8 Natural Gas Consumption by the U.S Nonmetallic Mineral Products Industry

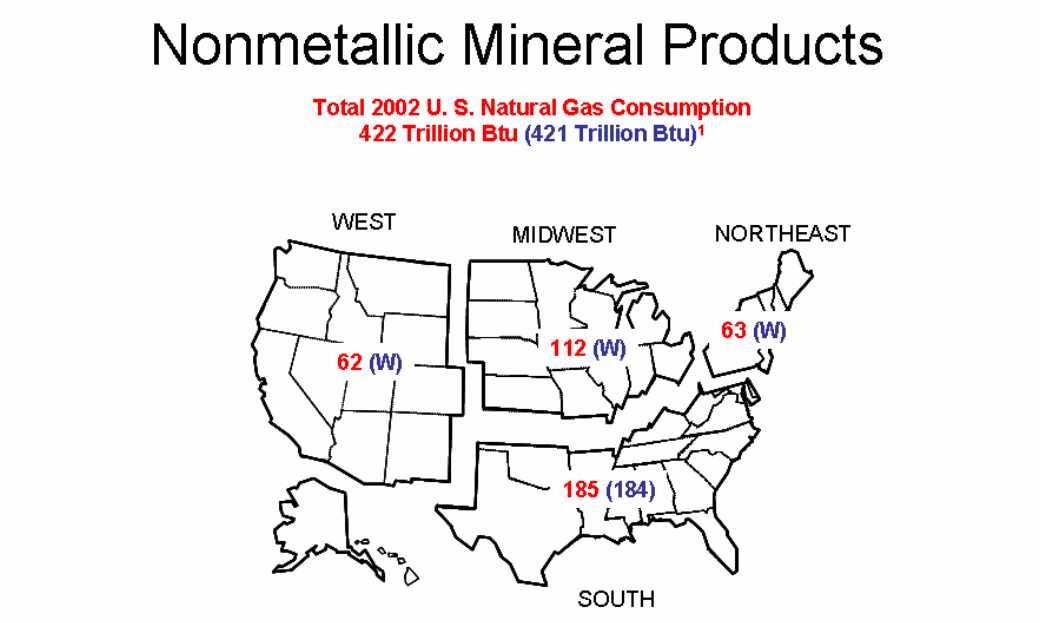

1. MECS 2002 Data http://www.eia.doe.gov/emeu/mecs/mecs2002/shelltables.html
2. Values outside of parentheses are reported as consumption for all purposes. Values in parentheses are for reported as consumption as fuel.
3. W denotes that EIA withheld data to avoid disclosure of individual establishments

Exhibit II-9 Natural Gas Consumption by the U.S Fabricated Metal Products Industry

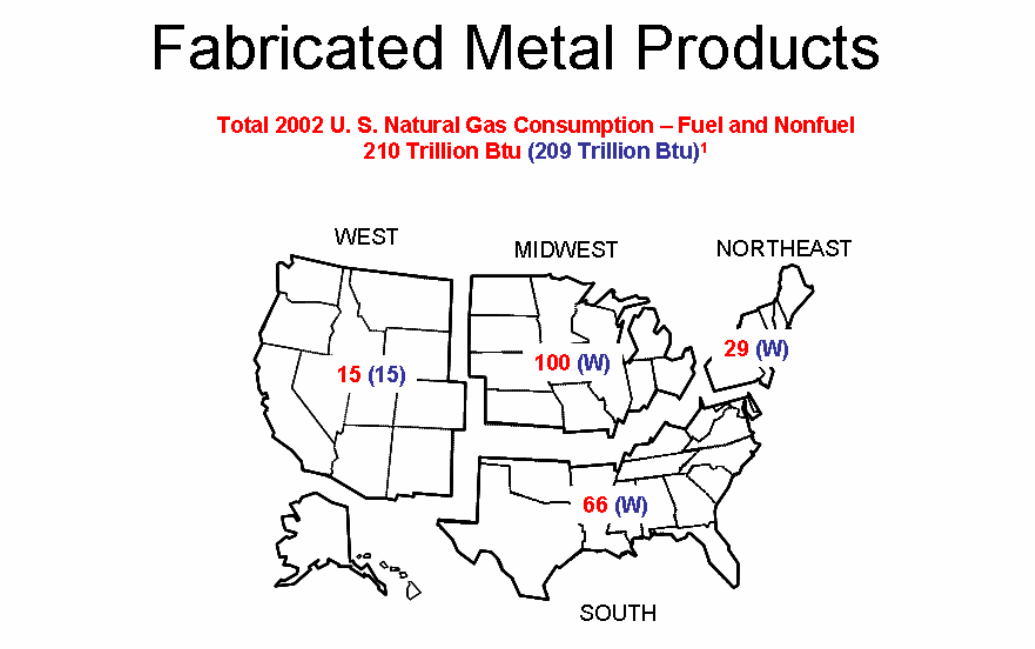

1. MECS 2002 Data http://www.eia.doe.gov/emeu/mecs/mecs2002/shelltables.html
2. Values outside of parentheses are reported as consumption for all purposes. Values in parentheses are for reported as consumption as fuel.
3. W denotes that EIA withheld data to avoid disclosure of individual establishments

Natural Gas Consumption by Industrial Facilities

Exhibit II-10 provides a summary of the number of industrial plants in IHS Inc.'s 2005 Major Industrial Plants Database (MIPD)[6] with natural gas consumption rates greater than 250 million Btu/hr (MMBtu/hr). The total annual natural gas consumption of these plants in the IHS 2005 MIPD database is about 3,000 trillion Btu, which represents about 42% of the total natural gas consumption by industry in 2005 estimated by the DOE/EIA.

The syngas and SNG production rate of a single BGL 1000 gasifier will depend on the type of coal being used. With an Eastern bituminous coal, such as Illinois #6, the gasifier is expected to produce nominally 1,000 MMBtu/hr of syngas or 790 MM Btu/hor of SNG when operating at full load. With PRB coal as a fuel, the syngas production rate is expected to be about 630 MMBtu/hr, and the SNG production rate is expected to be about 533 MMBtu/hr. Therefore, between 100 and 200 (30% to 60%) of the plants identified could have natural gas consumption rates greater than the production rate of a single BGL 1000 gasifier using Eastern bituminous or PRB coal as a fuel. From 140 to 240 or more plants could have natural gas consumptions rates lower than a single BGL

1000 gasifier production rate; therefore, there could also be a significant market for a smaller gasifier.

About 66 of the plants in the database (less than 20%) have natural gas consumption rates greater than 2,000 MMBtu/hr. Much of the emphasis in commercial implementation of coal gasification in the U.S. to date has been in the area of utility IGCC plants with gasifiers that have single unit capacities on the order of 2,000 MMBtu/hr or more.

The distribution of the plants in the IHS 2005 MIPD with natural gas consumption rates greater than 250 MMBtu/hr is shown by State in Exhibit II-11 and by Region in Exhibit II-12. About 59% of the plants are in the South region, with about 34% of the plants being in Texas (22%) and Louisiana (12%), 20% in the Midwest, 13% in the West, and 7% in the Northeast.

Exhibit II-10 Number of Industrial Plants in IHS 2005 MIPD With Annual Natural Gas Consumption Rates Greater than or Equal to 250 MMBtu/hr by SIC Name

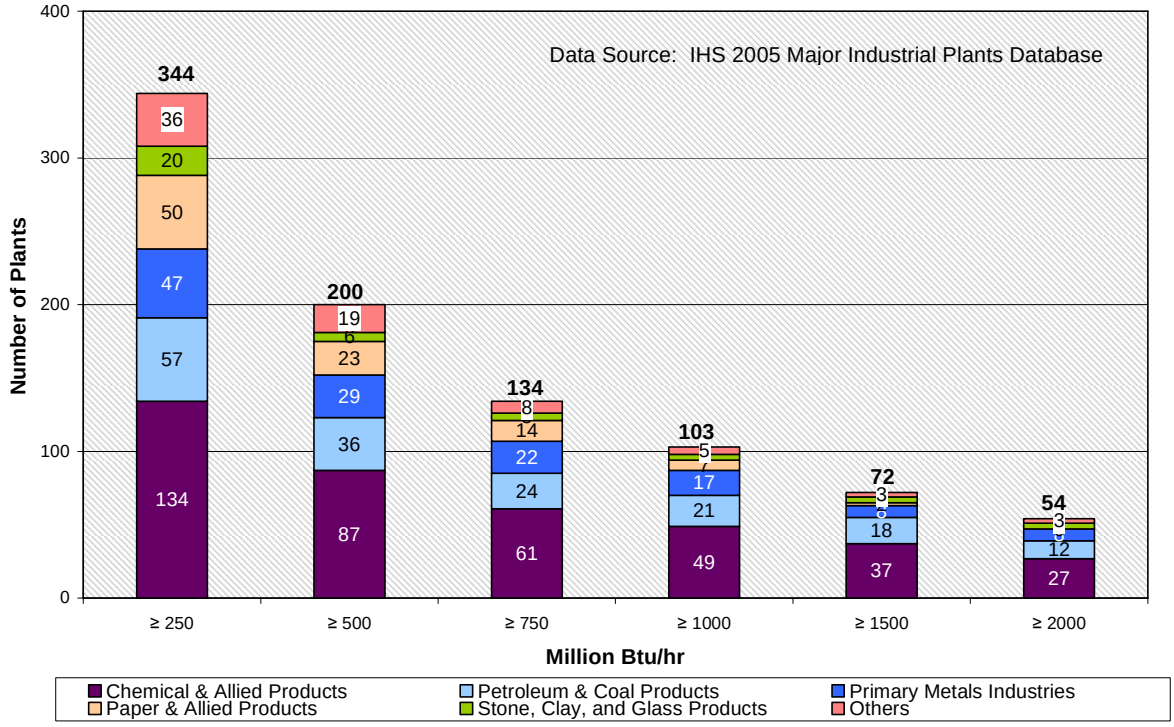

Exhibit II-11 Distribution of Industrial Plants in IHS 2005 MIPD with Annual Natural Gas Consumption Greater than or Equal to 250 MMBtu/hr by State

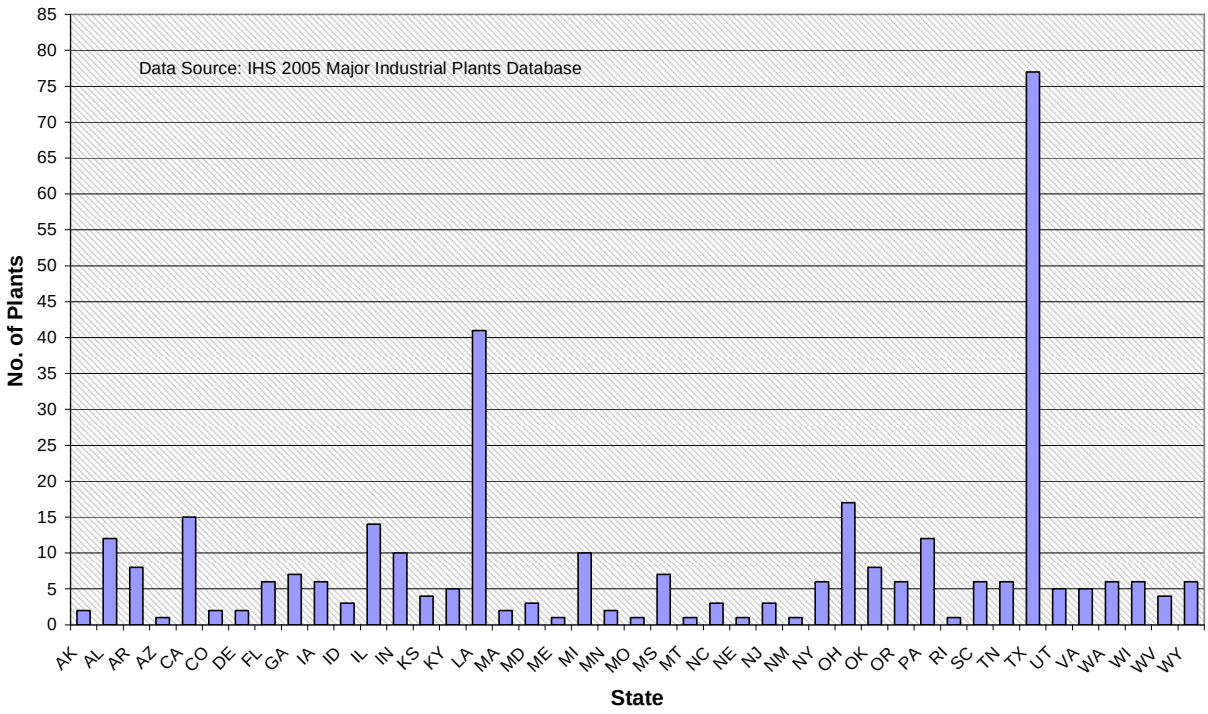

Exhibit II-12 Distribution of Industrial Plants in IHS 2005 MIPD with Annual Natural Gas Consumption Greater than 250 MMBtu/hr by Region

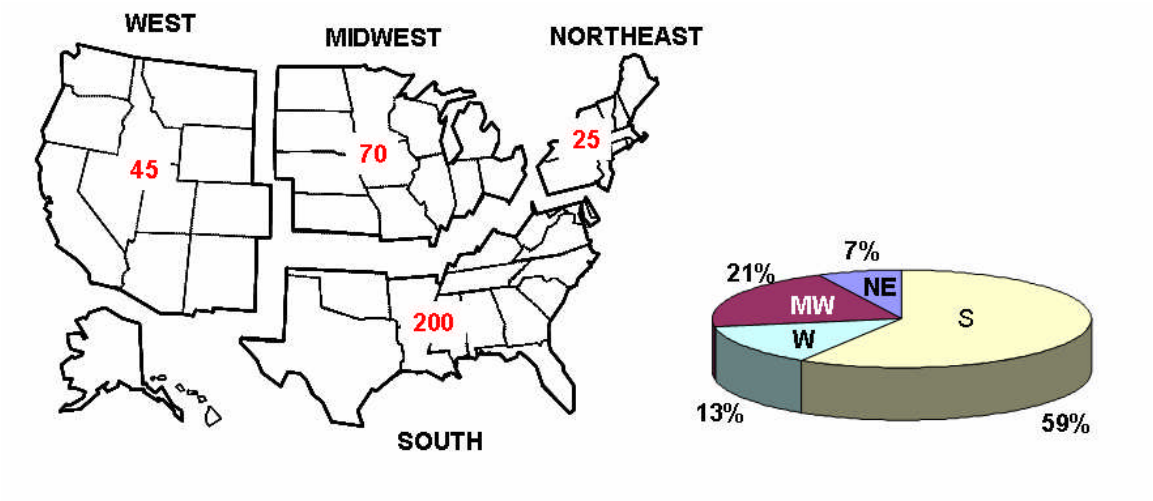

Data Source: IHS, Inc. 2005 Major Industrial Plants Database

II.2 U.S. INDUSTRY ELECTRIC ENERGY CONSUMPTION

The results of the 2002 EIA MECS indicate that the annual electric energy consumption by U. S. Industry was about 964,112 gigawatt-hours (GWh). This represents about 26% of the total electricity generated in the U.S. reported by the EIA. The EIA estimates in the AEO 2006 reference case that electric energy consumption by U.S. Industry will total about 1,037,515 GWh in 2006 (about 30% of total U.S. consumption) and will increase to about 1,145,955 GWh in 2020 (about 25% of total U.S. consumption).

Industry Electric Energy Consumption by Region and Industry Sector

The distribution of U.S. industrial electric energy consumption by region is illustrated in Exhibit II-13 and by industrial sector in Exhibit II-14, based on the DOE/EIA 2002 MECS. Almost 50% of the consumption is by industry in the South Region. About 28% is consumed by industry in the Mid-West Region, about 12% in the West, and 11% in the Northeast.

U.S. chemical industries consume about 23% of all the electric energy demand by U.S. industry, based on the MECS data. The primary metals sector consumes about 17%, paper about 13%, the food sector about 8%, petroleum and coal products about 6%, and non-metallic mineral products and fabricated metals about 5% each, with the remaining 22% distributed over the other industrial sectors.

Exhibit II-13 U.S. Industry Annual Net Electric Energy Consumption by Region

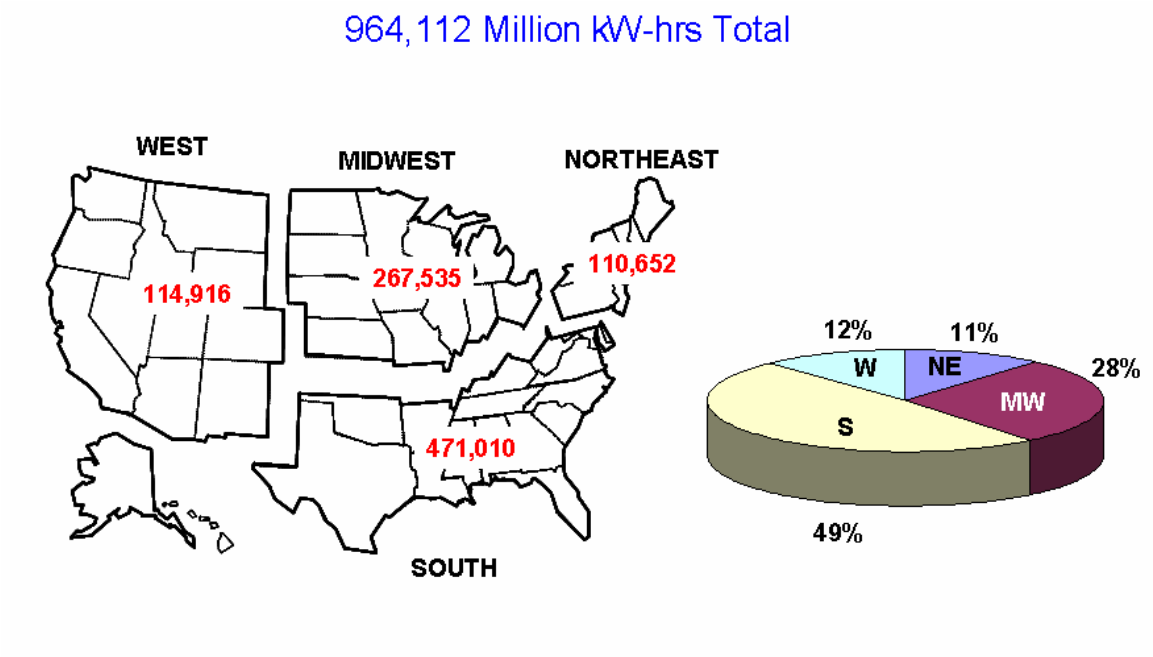

Data Source: DOE/EIA/MECS 2002 Data http://www.eia.doe.gov/emeu/mecs/mecs2002/shelltables.html

Exhibit II-14 U.S. Annual Net Electric Energy Consumption by Industry

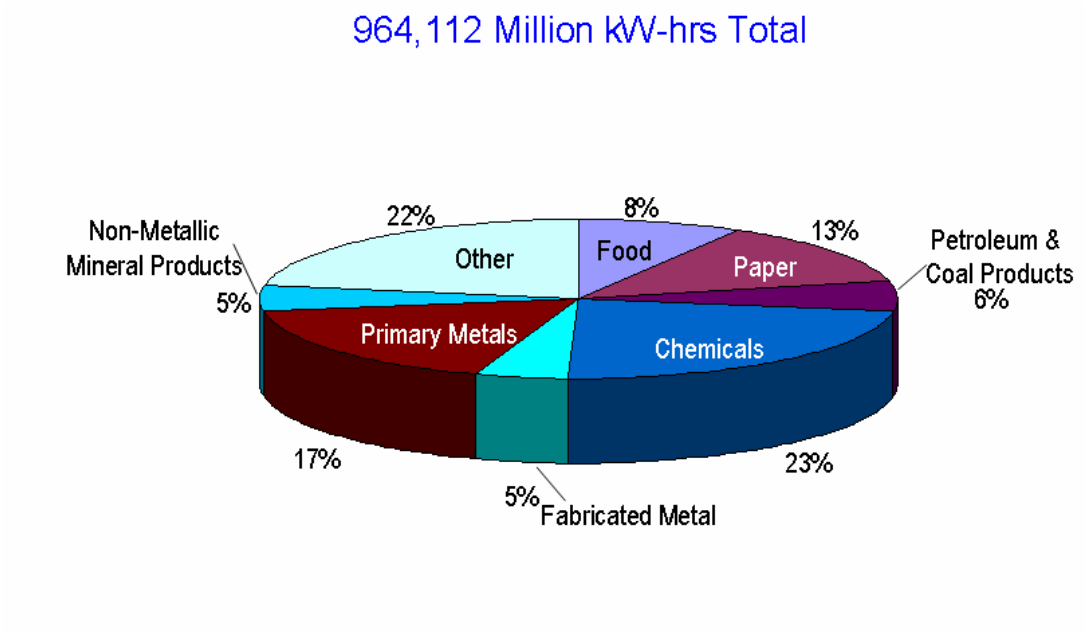

Data Source: DOE/EIA/MECS 2002 Data http://www.eia.doe.gov/emeu/mecs/mecs2002/shelltables.html

Industry On-Site Electric Power Generation

The DOE/EIA 2002 MECS database indicates that U.S. Industry has about 15.3 GW of on-site electric generating capacity and generates about 134,268 GWh annually. About 67% of the capacity and generation is by plants in the South region, as shown in Exhibit II-15 and Exhibit II-16. The remainder is generated almost equally in the West, Mid-west, and Northeast regions.

U.S. Industry on-site electric generating capacity and annual electric energy generation by industry sector estimates are shown in Exhibit II-17 and Exhibit II-18. On-site electric energy generation by the Paper and Chemical industries represent 38% and 37%, respectively, of the total industry on-site generation. The Petroleum and Coal Products sector generation represents about 13% of the total, Food and Primary Metals sectors about 4% each, with the remaining 4% distributed over other industrial sectors.

According to the EIA 2002 MECS database, about 583 establishments reported using combustion turbines in cogeneration, about 287 reported using conventional combustion turbines with heat recovery and 296 reported using combined cycle combustion turbines. About 229 industrial establishments reported using combustion turbines in the Platts 2002 database[7], with a total of about 10 GW capacity. Of the establishments reporting in the Platts database, about 210 reported generating capacities of less than 100 MW, and 18 reported generating capacities between 50 MW and 100 MW. The EIA MECS database did not contain data concerning the generating capacity by establishment.

Exhibit II-15 U.S. Industry On-Site Electric Energy Generation by Region

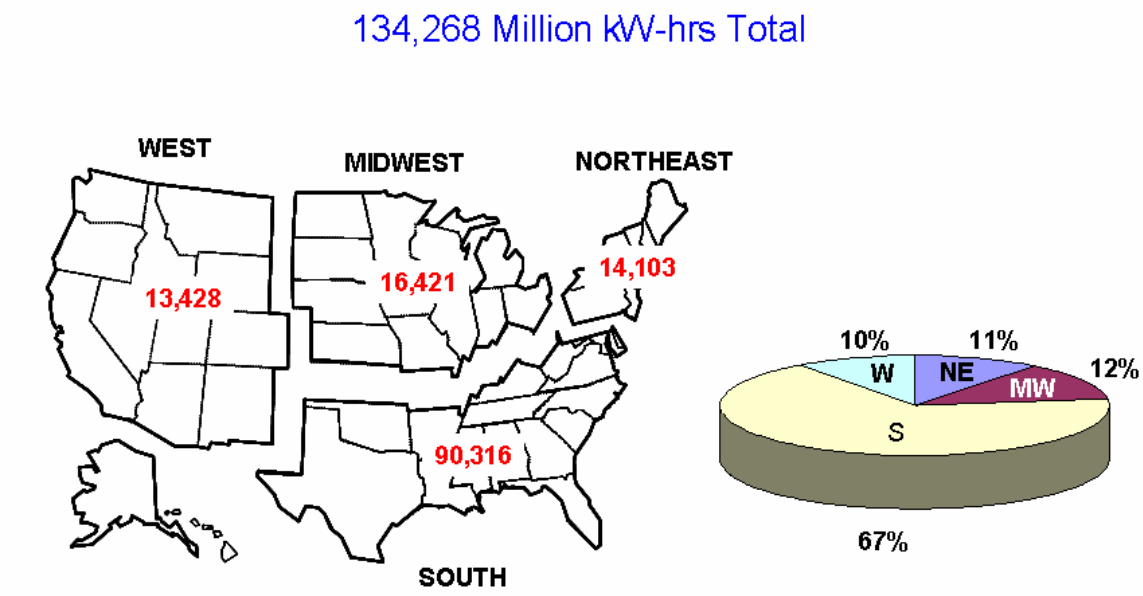

Data Source: DOE/EIA/MECS 2002 Data http://www.eia.doe.gov/emeu/mecs/mecs2002/shelltables.html

Exhibit II-16 U.S. Industry On-Site Electric Generating Capacity by Region

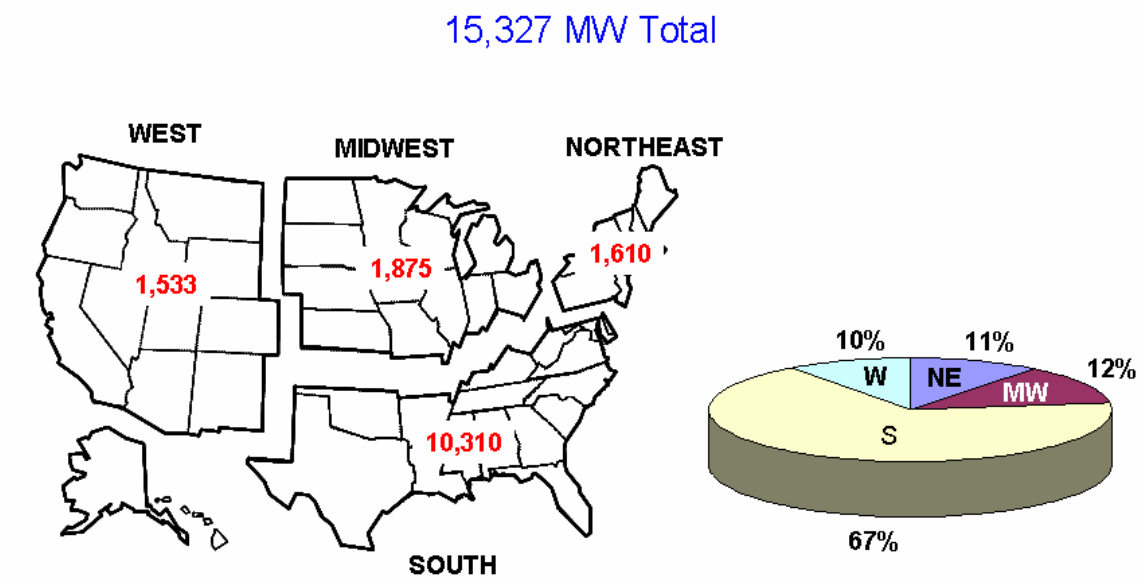

(1) Calculated from 2002 DOE/EIA/MECS On-Site Electric Generation data in kW-hrs assuming 100% Capacity Factor

Exhibit II-17 U.S. Industry On-Site Electric Energy Generation by Industry

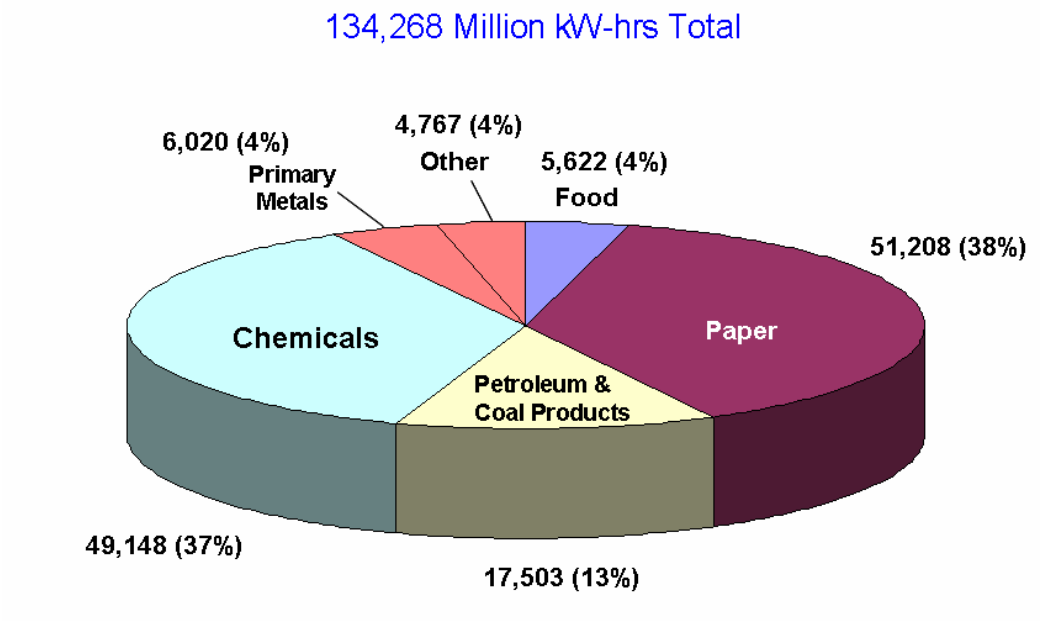

Data Source: DOE/EIA/MECS 2002 Data http://www.eia.doe.gov/emeu/mecs/mecs2002/shelltables.html

Exhibit II-18 U.S. Industry On-Site Electric Generating Capacity by Industry

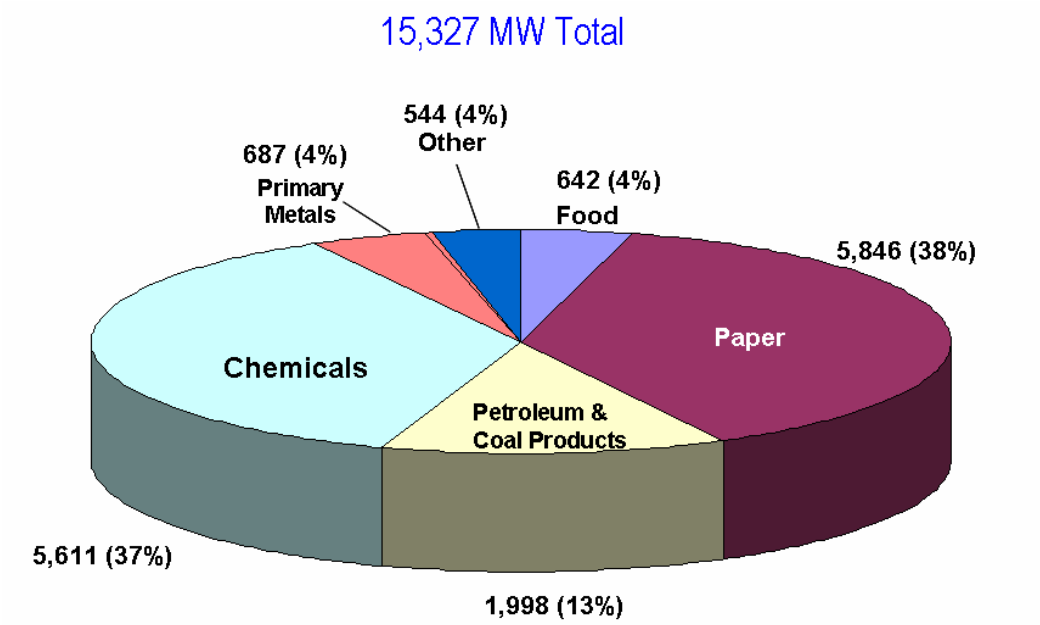

(1) Calculated from 2002 DOE/EIA/MECS On-Site Electric Generation data in kW-hrs assuming 100% Capacity Factor

II.3 RELIABILITY

Discussions with industrial gas suppliers and potential industrial customers have indicated that in general industrial plants have high availabilities and require fuel supply reliability near 100%. Typical types of natural gas supplies are 30-day interruptible supply and firm gas (uninterruptible) supply. Plants that have dual natural gas/oil firing capability can obtain lower cost 30-day interruptible natural gas and store 30 days oil supply on-site. These plants would require a syngas production plant with at least 91.8% gas supply reliability, which should be achievable with today's gasification technologies. Those plants currently requiring firm gas supply that could convert their equipment to dual syngas/natural gas firing would likely require that a syngas production facility provide either syngas or natural gas with 100% reliability.

Some plants, such as those in the steel industry, have a large number of burners, and conversion of all burners to syngas firing or dual syngas/natural gas firing may involve major capital investment and/or operational modifications. These plants would likely be best served by a coal gasification facility producing SNG rather than syngas.

II.4 ENVIRONMENTAL CONSIDERATIONS

A major concern of potential industrial customers is the impact that refueling from natural gas to coal-derived syngas will have on their gaseous emissions and how it will affect their air quality permits. Potential customers do not want to increase either their hourly emissions or significantly increase their annual emissions because it may require that they add pollution control equipment to meet New Source Performance Standards (NSPS), National Emissions Standards for Hazardous Air Pollutants (NESHAP), Best Available Control Technology (BACT), or Lowest Achievable Emission Rates (LAER) requirements. Potential emissions of sulfur dioxide and mercury will likely be of most concern since it is anticipated that particulate matter, NOx, and CO emissions will be similar to those from natural gas combustion.

Most of the acid gas removal (AGR) systems currently used commercially with coal gasification systems do not remove sulfur to levels found in natural gas. Therefore, coal-derived gas cleanup systems utilizing such technologies will result in increased hourly and

annual emissions from industrial plants using natural gas, assuming operation of the plants at the same capacity factor. The level of sulfur concentration remaining in the coal-derived syngas from most of these AGRs (on the order of 15 to 20 ppmv) may also result in annual SO_2 emissions from combustion systems exceeding the limit for "major modification" (40 tons/year), based on utilization of 1,000 MMBtu/hr or more of syngas. One of the few commercially available AGRs that will clean coal-derived syngas to natural gas sulfur levels is the Rectisol process, as will be discussed further in Section IV.3.

The current environmental regulations limit mercury emissions from existing solid fuel-fired boilers to 9 pounds per trillion Btu. There is an increasing awareness of the potential for future mercury emissions regulations from combustion systems using coal-derived fuels.

Other environmental concerns that must be addressed in the design of coal gasification systems are coal dust from coal storage and transport areas, emissions during start-up, shut-down, and upsets in the gasification system, waste water treatment effluents, and other waste streams.

II.5 SITING CONSIDERATIONS

Evaluation of the potential for refueling natural gas-fueled industrial facilities with coal-derived syngas must also consider site characteristics. Some siting considerations are:

- Increased site acreage for gasification system, coal receiving and storage, ash/slag effluent storage and disposal, and flare installation;
- Accessibility for coal delivery and ash/slag removal by either rail or truck;
- Water availability;
- Visual impact;
- And, as mentioned previously, environmental impacts.

The amount of area required for coal storage depends on the source of fuel, consumption rate, and accessibility of the site for truck and/or rail delivery. If the site is relatively local to the coal source, if potential weather conditions are not expected to result in extended

delays in coal delivery, and if frequent delivery does not adversely impact local traffic, then the storage area can be limited. Gasification systems that can use coal with properties that require little or no preparation, such as the fixed bed gasifiers that can handle high moisture coals in sizes up to 2 to 4 inches, also will require less area for fuel preparation relative to those that require slurry or pulverized coal. Particulate emissions limitations may require the use of enclose coal storage, with increased capital costs.

Gasification systems require flares to oxidize gases from the gasification system during start-up, shut-down, and during system upsets. There are two basic types of flares: elevated flares and enclosed flares. Elevated flares are the most common since enclosed flares are typically 3 to 4 times more costly. However, elevated flares can be quite tall, on the order of 150 ft. or more if restricting access to personnel around the base of the flare is not desirable, and may have a significant visual impact. To reduce the height, with a resulting increase in thermal radiation at ground level, clear area around the base is required; the lower the height the larger the diameter of clear area required at the base of the flare. Although closed flares are shorter than elevated flares, they may still have a significant presence. For example, a 35MMSCFD enclosed flare may be on the order 30 feet in diameter at the base and 60 feet high.

The amount of water required for gasification process depends on the type of gasifier and the syngas cleanup requirements. The amount of water required for steam for gasification processes can range from 5 to 20 gpm per100 million Btu/hr of syngas. Makeup water for wet cooling systems can also be significant, although air-cooled systems, at higher capital cost, could be utilized in areas where water supply is restricted.

This page is intentionally left blank

III POTENTIAL FUELS AND BYPRODUCTS

This section discusses the results of an investigation into potential fuels for and byproducts from the project gasification system, a BGL gasifier-based system.

III.1 POTENTIAL FUELS

The BGL gasifier is a fixed bed, slagging gasifier that can gasify essentially all of the coals mined in the U.S., bituminous, sub-bituminous, and lignites, and many other opportunity fuels. Some of the characteristics found in solid fuels that can be gasified in the BGL gasifier include:

- Non-caking, weakly caking, and strongly caking – The BGL gasifier utilizes a stirrer at the top of the gasifier where the fuel is introduced to ensure smooth, continuous feed of caking fuels.
- Low ash fusion and high ash fusion temperatures – Fluxes such as limestone can be mixed with the fuel in the gasifier to flux high ash fusion temperature fuels to result in acceptable slag viscosities.
- Particulate size of ¼" to 2", typical of as-received coal, shredded tires, and other solid fuels – The BGL gasifier is a fixed bed gasifier capable of handling a wide range of fuel sizes.

Additionally, a wide range of composition characteristics are acceptable to the BGL gasifier. The limitations are primarily determined by economics, not the capability of the gasifier to handle or gasify the fuels. Some of these characteristics and typical economical ranges of fuels that have been tested are as follows:

- Moisture: 3% to 28%[f]
- Ash: 0.5% to 21%
- Sulfur: 0.5% to 5.6%

[f] The actual economic limitations will depend on site specific applications and should be evaluated on a case by case basis. For example, fuels with moisture contents up to 40% can be gasified with a slight oxygen consumption penalty.

- Chlorine: Up to 0.6%
- Fines: Up to 40% contained in primary fuel stream depending on coal characteristics; higher with special handling.

.

Some of the more specific fuels that have been processed in commercial BGL gasifiers or tested in pilot-scale or commercial-scale demonstration units are as follows:

100% Feed:

- Illinois #5 and #6 coals
- Pittsburgh #8 coal
- Ohio #9 coal
- Powder River Basin (Belle Ayre) coal
- Lignite
- Pelletized and briquetted coals
- Petroleum Coke (Petcoke)
- Metallurgical coal

Blended Feed:

- Biomass (wood waste)
- Tire Derived Fuel (TDF)
- Refuse Derived Fuel (RDF)

A list of some of the coals gasified during tests on a 6-foot diameter (nominal 350 tons/hr coal input) and 8-foot diameter (nominal 500 tons/hr) BGL gasifier at British Gas' Westfield Development Center in Scotalnd demonstrating the gasifier's flexibility with respect to coal characteristics is shown in Exhibit III-1. A table showing typical characteristics of solid fuels processed in the nominal 12-foot diameter BGL gasifier in the SVZ Schwarze Pumpe facility in Germany is presented in Exhibit III-2.

Exhibit III-1 Select List of Coals Tested in BGL Gasifiers in Westfield Development Center

Fuel Type	Origin	Dry Basis HHV Btu/lb	Dry Basis Ash %	Dry Basis Sulfur %	Moisture %	Swelling Index	Nominal Throughput As-Rec'd	Gasifier Location	Gasifier Nom.dia. (ft.)
Rossington	GB	13206	4.94	0.29	8.77	3	14.5	Westfield	6.0
Manton	GB	13442	8.02	2.00	4.78		14.5	Westfield	6.0
Ohio #9	US	11940	16.22	2.64	6.18	3-1/2	14.4	Westfield	6.0
Hucknall	GB	13146	4.18	1.98	6.44	3-1/2	14.5	Westfield	6.0
Killoch	GB	13358	5.13	1.44	7.98	3-1/2	14.5	Westfield	6.0
Manvers	GB	13270	5.62	1.64	5.32	3	14.5	Westfield	6.0
Lynemouth	GB	12684	6.27	1.43	11.34	3-1/2	14.5	Westfield	6.0
Frances	GB	12367	8.31	0.61	6.28		14.5	Westfield	6.0
Seafield	GB	10197	23.82	0.39	12.01	1	14.0	Westfield	6.0
Belle Ayr	US	11788	7.76	0.41	25.22		14.2	Westfield	6.0
Comrie	GB	13143	6.57	0.76	4.02	2-1/2	14.5	Westfield	6.0
Lignite	GER	10660	11.60	2.37	34.89		13.6	Westfield	6.0
Gedling	GB	11630	6.53	1.00	12.73	1	14.4	Westfield	6.0
Costgrave	GB	11139	17.88	0.67	10.58	1/2	14.2	Westfield	6.0
Illinois #6	US	12590	12.64	3.40	6.97	4	20.6	Westfield	8.0
Illinois #6 + 25% Fines	US	12700	14.32	2.75	10.60	4	20.6	Westfield	8.0
Pittsburgh #8	US	12907	14.29	2.70	6.10	7	20.6	Westfield	8.0
Pittsburgh #8 + 20% Fines	US	12802	14.79	2.68	7.65	5-1/2	20.6	Westfield	8.0
Pittsburgh #8 + 35% Fines	US	12777	15.27	2.58	9.03	5	20.6	Westfield	8.0
Markham	GB	10880	21.84	1.60	13.00	1	20.0	Westfield	8.0
North Sea Petcoke	GB	15276	0.87	3.41	4.40		20.8	Westfield	8.0
Rawdon	GB	12237	5.01	1.25	14.70	1	20.6	Westfield	8.0
Kellingley	GB	11701	17.21	2.24	7.2	2	20.5	Westfield	8.0
Coventry	GB	11763	10.18	1.52	9.6	1-1/2	20.6	Westfield	8.0

Data provided by Allied Syngas Corporation

Exhibit III-2 Waste / Coal Mixtures Demonstrated in Commercial BGL Gasifier at SVZ[8]

	max./min. Range	Demonstrated Operation Range			
RDF-Pellets	5 - 50	20	25	40	40
Agglomerated Plastic Waste	5 - 50	30	45	45	20
Compacted Shredder Light Fraction	0 - 10	-	-	-	-
Briquetted Industrial Sludge / Briquetted Sewage Sludge	5 – 25	25	10	5	15
Shredded Wood Waste	0 - 15	-	-	-	-
Hard Coal/Lignite	20 - 25	19/6	12.5/7.5	12.5/7.5	19/6

III.1.1 Coals

Estimates of the resources, heating values, and average price of select coal types are shown in Exhibit III-3. There are an estimated 255 billion tons of bituminous coal available in the Appalachian and Illinois Basins.[9] The higher heating values of these coals range from about 10,500 Btu/lb to about 14,000 Btu/lb on a moisture and ash free (MAF) basis. Moisture content of these coals can range from about 3% to about 12%, and ash content can range from about 7% to about 15%. The average delivered price ranges from about $36/ton ($1.46/MMBtu) to about $58.25/ton ($2.38/MMBtu).[10]

There are an estimated 550 billion tons of PRB coal available from the Wyodak-Anderson Zone in Wyoming.[9] The higher heating value typically ranges from about 8,300 Btu/lb to 9,500 Btu/lb (MAF). Moisture content can range from about 19% to about 35%, and ash content can range from about 2% to about 17%. The average delivered price is on the order of $17.75/ton or about $1.00/MMBtu.[10]

Exhibit III-3 Availability, Heating Value, and Price of Select Coal Types

Fuel	Quantity Available	Heating Value	Average Price (U.S. Total)
Coals			
Bituminous	255 billion tons[1] from Appalachian & Illinois Basins	10,500 – 14,000 Btu/lb (MAF)	$36 – $58.25/ton[b] $1.46 - $2.38/MMBtu
PRB	550 billion tons[a] (Wyodak-Anderson Zone)	8,300 – 9,500 Btu/lb (MAF)	Ca. $17.75/ton[b] $1.00/MMBtu
Lignites	35 billion tons[a] (North Dakota)	6,300 – 8,300 Btu/lb (MAF)	Ca. $12.27/ton[b] $0.84/ton

[a] USGS Resource Assessments

[b] EIA Coal and News Markets, February 6, 2006

An estimated 35 billion tons of North Dakota lignite is available.[9] The higher heating value of this type coal ranges from 6,300 Btu/lb to 8,300 Btu/lb. Moisture content can be as high as 37%. The price averages about $12.27/ton or $0.84/MMBtu.[10]

III.1.2 Other Fuels

The availability, heating value, and typical price of select fuels of opportunity are shown in Exhibit III-4. These include Petcoke, TDF, and RDF.

There is an estimated 29 million tons/year of Petcoke produced by refineries in the U.S.[11] Higher heating values can range from 12,600 Btu/lb to 14,500 Btu/lb.[12] The price can range from $0.46/MMBtu to $0.70/MMBtu on the Gulf Coast and $1.29/MMBtu to $1.43/MMBtu in the U.S. West.[11]

Exhibit III-4 Availability, Heating Value, and Price of Select Opportunity Fuels

Fuel	Quantity Available	Heating Value	Price
Other Fuels			
Petcoke	29 million tons/yr produced by U.S. refineries [1]	12,600 – 14,500 Btu/lb [5]	$0.46 – $0.70/MMBtu GC [1] $1.29 - $1.43/MMBtu U.S.West [1]
TDF	290 million scrap tires generated annually. 46% currently used as fuel. [3]	ca. 15,500 Btu/lb [4]	$1.30/MMBtu [4]
MSW (RDF)	190 million tons/yr combustible MSW generated [2]	5,500 – 7,200 Btu/lb[6]	

[1] Energy Publishing, LLC Domestic & International Petcoke Report May 2005
[2] Based on US EPA MSW Generation Data for 2003 and 80% Combustible Material
[3] US EPA, 2003 Data
[4] Proprietary Report. $2005 dollars
[5] Firing Refinery By-Products in CFB Steam Generators. Foster-Wheeler
[6] State of Connecticut Office of Policy and Management Energy Data. May 9, 2006.

There are approximately 290 million scrap tires generated in the U.S. annually, with about 46% currently used as fuel.[13] The higher heating value is on the order of 15,600 Btu/lb.[14] The delivered price

of TDF in central Pennsylvania was reported to be on the order of $1.30/MMBtu.[15]

There is approximately 236 million tons/year of MSW generated in the U.S. annually.[16] About 80% of the MSW is combustible material[17], resulting in about 190 million tons/year of combustible MSW. Refuse Derived Fuel is MSW processed to remove non-combustible materials. Good RDF has a heating value of about 7,200 Btu/lb, and average mass burn RDF has a heating value of about 5,500 Btu/lb.[18]

III.2 POTENTIAL PRODUCTS AND BY-PRODUCTS

Potential products and by-products of the BGL gasifier include the following:

- Medium Btu syngas
- Hydrogen
- SNG
- Sulfur
- Tars, oils, phenols, and naphtha
- Slag
- CO_2

The primary product from the BGL gasifier is a medium Btu (about 350 Btu/scf) syngas. The syngas can be used as a fuel in syngas capable furnaces, boilers, and gas turbines, or further processed in other processes to co-produce hydrogen or to produce SNG.

Byproducts of the BGL gasification process are tars, oils, phenols, naphtha, sulfur, slag, and CO_2. The tars, oils, phenols, and naphtha are formed because of the low temperature of the syngas leaving the BGL gasifier. These byproducts are best recycled back into the gasifier to maximize the energy content of the primary syngas product.

The quantity and viscosity of the ash in the fuel to the gasifier is controlled, via the addition of a flux if necessary, such that the ash melts in the lower section of the gasifier and is removed from the gasifier and quenched to form a vitreous, non-leaching frit (slag). The slag may be useable as a road aggregate, concrete aggregate, or fill material. The market for the slag will be very site specific, and

unless there is a local concrete manufacturer or major local road construction projects, the slag will likely be disposed in a non-hazardous landfill.

CO_2 may be considered a marketable by-product for enhanced oil recovery depending on the AGR process used and the location of the syngas production plant. The Rectisol AGR process not only removes sulfur from the syngas but also removes CO_2. In the case of syngas production, when the syngas from the gasifer is not shifted with water to convert CO to H_2 and CO_2, the quantity of CO_2 in the syngas and removed by the Rectisol process is small. The CO_2 that is removed is contained in the offgas from a flash regenerator in the Rectisol process, and is recombined with the syngas product stream. However, when the syngas is shifted for the production of SNG, the quantity of CO_2 removed in the Rectisol process is significant. If the syngas plant is located in the vicinity of oil fields and/or CO_2 transport pipelines, then it may be economical to market the CO_2, as does the Great Plains Synfuels Plant in North Dakota. CO_2 from the Great Plains plant is transported through pipeline to Canadian oil fields. A study by the Bureau of Economic Geology in Texas identified over 1700 significant reservoirs in the state that could be used to sequester CO_2 while enhancing oil production in areas of Texas far from the existing CO_2 delivery infrastructure.[19] The National Petroleum Technology Office (NPTO) performed a screening analysis that identified 125 oil fields in Texas and 20 oil fields in New Mexico that met the physical criteria for CO_2 flooding and would have a rate of return on investment required to implement CO_2 flooding of greater than 10%.[19] The study also identified 52 oil fields in California that satisfied the physical characteristic screening criteria for enhanced oil recovery (EOR) via CO_2 flooding. If production of CO_2 as a marketable by-product is not economical, the CO_2 rich stream from the AGR, that also contains some hydrocarbons, can be combined with syngas that is used as a fuel in a fired boiler for generating steam for the process.

The syngas from the gasifier contains H_2S and COS that is removed in an AGR system to the extent required to satisfy emissions criteria or downstream syngas conversion system criteria. In addition to the cleaned (sweet) gas from the AGR, there is a sour gas stream from the AGR in which H_2S is concentrated. The sour gas stream can be further processed to produce elemental sulfur or sulfuric acid. It is typically processed to produce elemental sulfur unless there is a local market for the sulfuric acid due to high sulfuric acid transportation costs.

The two co-products or byproducts that have the greatest marketing potential at this time are hydrogen and sulfur. Therefore, the market for these products was addressed in more detail.

III.2.1 Hydrogen

Hydrogen Production and Use

Approximately 9 million tons (3.6 trillion scf) of hydrogen is produced annually in the U.S.[20] Of this amount, about 1.5 million tons (0.6 trillion scf) is merchant hydrogen production that is sold to refineries and chemical plants.[21] About 95% of the hydrogen in the U.S. is produced by steam methane reforming (SMR).[20]

Amory Lovins, CEO of Rocky Mountain Institute, indicates that about 47% of the hydrogen, or 4.2 million tons/year (1.7 trillion scf/year), produced in the U.S. is used by refineries.[22] The Chemical Market Reporter indicates in its Chemical Profile on hydrogen that about 67% of hydrogen production is used in petroleum refining, and 26% in petrochemicals manufacturing.[23]

Hydrogen is used in refineries to remove organic sulfur from crude oil, as well as to convert heavy crude to lighter, easier to refine, and more marketable products. There are a number of hydrotreating processes in a refinery, including the following as identified by Linde Gas in Reference 24:

- Hydrodesulfurization: sulfur compounds are hydrogenated to hydrogen sulfide as feed for Claus plants
- Hydroisomerization: normal paraffins are converted into iso-paraffins to improve the product properties
- Dearomatization: aromatics are hydrogenated to cycloparaffins or alkanes
- Hydrocracking: long-chain hydrocarbons are cracked to shorter chains in the gasoline range.

The demand for hydrogen by refineries is expect to increase to meet mandates for low-sulfur gasoline and diesel fuel, as well as for processing higher sulfur crudes. [24]

Hydrogen is also used as a reactant in the manufacture of basic chemicals and intermediates, as well as specialty chemicals and pharmaceuticals.[25]

Expected Trends

The following summary of the expected trend in demand and production for hydrogen is based on data provided in the Chemical Profile for hydrogen published in the Chemical Market Reporter[23]

- Demand for merchant hydrogen increased at a rate of about 9.5% per year for the period 1997 through 2002.
- Hydrogen has remained strong despite the weakened economy in recent years and this situation should prevail regardless of when the economy turns around. The industrial gas majors, Air Products and Chemicals, Praxair, Air Liquide, and BOC have all raised their prices for hydrogen, based on the strong demand. This pricing trend is expected to continue.
- With the cost of sweet crude oil increasing, refiners are processing more heavy sour crude, which requires additional hydrogen for sulfur removal. Moreover, legislation planned to reduce sulfur content in diesel in 2006 will require refiners to use more hydrotreating process steps. As a result, U.S. hydrogen demand should grow at 4% per year during the next four years.
- While some refiners own and operate their own hydrogen plants, industrial gas companies have seen an increase in their on-site business as refiners view hydrogen as a utility and allow the gas companies to build, own and operate the hydrogen plants. This trend will produce double digit growth in the merchant hydrogen sector.
- Although the aggregate hydrogen consumption is growing at about 4% annually, growth in the merchant hydrogen business is significantly higher, perhaps 10%, as refineries change their sourcing strategy. In the past, refineries met their hydrogen requirements with recovered material, or they built, owned and operated their own hydrogen plants. But refineries are increasingly strapped for cash, making them receptive to buying hydrogen from single- and multi-user pipelines owned and operated by industrial gas companies.

In addition, hydrogen is expected to be increasingly used as a transportation fuel and as a fuel for electric fuel cells.

Price

C.E. Gregoire Padro and V. Putsche[26] indicate that hydrogen production costs from SMR are estimated to range from 1.6 times natural gas feed cost for a plant capacity of 238 million standard cubic feet per day (MMscfd) to 3.2 times natural gas cost for 10

MMscfd plant capacity. This is consistent with information provided to WorleyParsons by a hydrogen supplier that, although hydrogen pricing strategy is complex, a rule-of-thumb for merchant pipeline hydrogen price to refineries is about 1.6 times the price of natural gas on a million Btu basis. Discussions with a refinery indicate that their method of looking at prices differs, but that their value is fairly close to that which would be determined based on the 1.6 factor on natural gas price, or a little higher. Based on the above discussed factors, the price of hydrogen would range from $11.20/MMBtu to $22.40/MMBtu for $7/MMBtu natural gas depending on hydrogen plant capacity and delivery method.

Because of the ability to efficiently produce hydrogen from syngas produced from petcoke and coal in a BGL gasifier, the increasing need for hydrogen by refineries, the low price for petcoke as a fuel, and the relatively high product value of hydrogen, application of industrial size gasification to refineries has the potential to be economically attractive.

III.2.2 Elemental Sulfur

Sulfur Production and Consumption

According to the U.S. Geological Survey (USGS), elemental sulfur and byproduct sulfuric acid were produced at 114 operations in 30 States and the U.S. Virgin Islands in 2004.[27] Sulfur consumption in the U.S. totaled about 12.4 million tons, about 90% of which was consumed in the form of sulfuric, with about 76% being produced in the U.S. from elemental sulfur (70%) or byproduct acid. The remaining 24% was provided by imported sulfur and sulfuric acid. About 90% of the sulfur was consumed in the form of sulfuric acid, and the majority of sulfuric acid is produced by burning elemental sulfur.[27,28] About 60% of the reported sulfur demand was for agricultural chemicals (primarily fertilizers). About 25% was for petroleum refining, and about 3% for metal mining. Other uses, accounting for 12% of the demand, were widespread because a multitude of industrial products required sulfur of another during some stage in their manufacture. A chart illustrating the flow of sulfur in the U.S. in the year 2000 from production sources to end users is shown in Exhibit III-5. A chart showing the end uses of sulfur is presented in Exhibit III-6.

Exhibit III-5 Flow of Sulfur in the U.S. in 2000

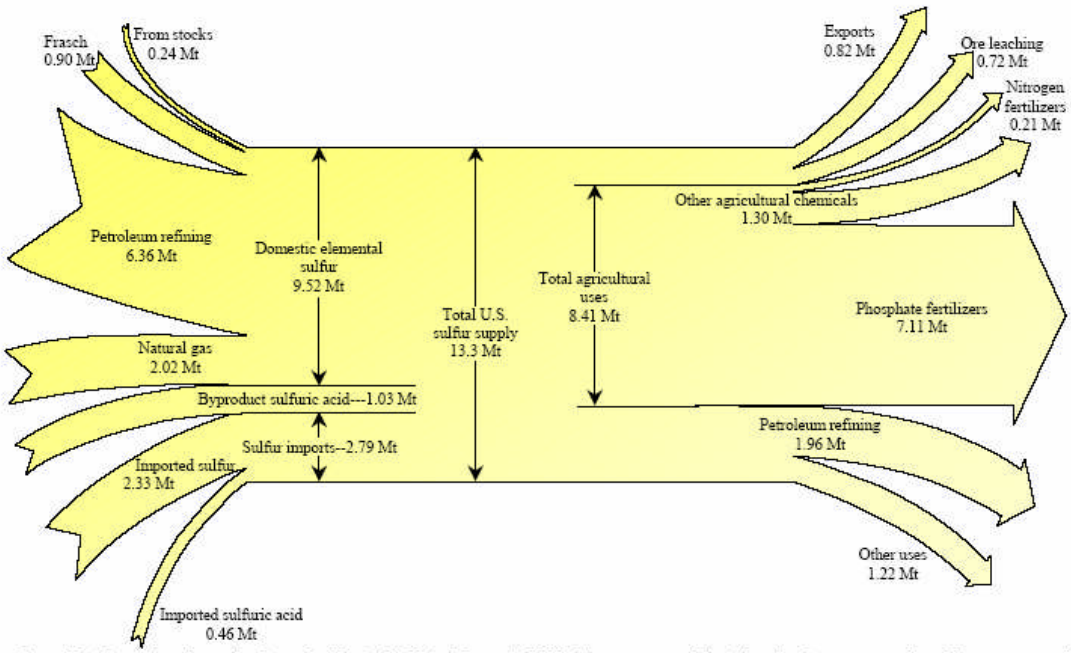

Figure 18. Figure that shows the flow of sulfur in the United States in 2000. The sources and the industries that consume the sulfur are at opposite ends of the arrow. Data listed are in million metric tons (Mt).

Exhibit Source: USGS Sulfur Statistics and Information, Materials Flow of Sulfur, OF-02-298[28]

Exhibit III-6 End Uses of Sulfur and Sulfuric Acid 1976-2000

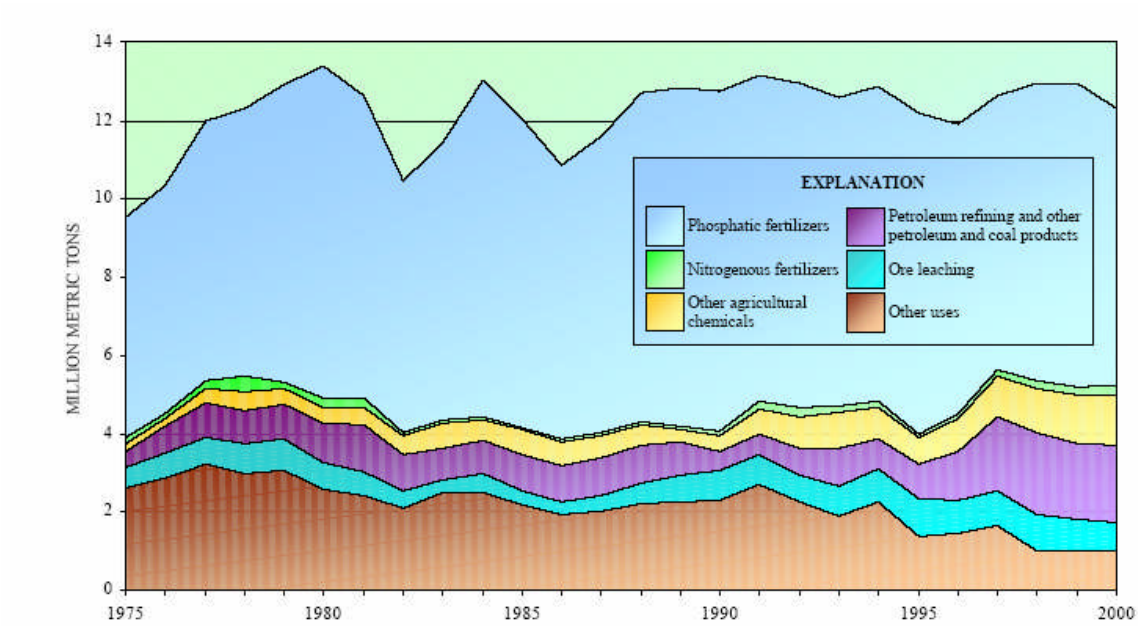

Figure 19. Chart that shows the end uses of sulfur and sulfuric acid. In addition to the uses listed, sulfur and sulfuric acid are consumed in a wide variety of other industries.

Exhibit Source: USGS Sulfur Statistics and Information, Materials Flow of Sulfur, OF-02-298[28]

All the sulfur produced in North America is the result of environmental measures implemented to reduce emissions of SO_2 into the atmosphere at petroleum refineries and nonferrous metal smelters and to remove poisonous hydrogen sulfide (H_2S) gas from natural gas.[28]

In 2004, elemental sulfur production was 9.3 million tons in the U.S. and U.S. Virgin Islands. About 46% of this (4.3 million tons) was produced in Louisiana and Texas. Elemental sulfur was recovered at petroleum refineries, natural gas processing plants, and coking plants by 38 companies at 108 plants in 26 states and the U. S. Virgin Islands. Domestic elemental sulfur provided 70% of domestic sulfur consumption.[27] The USGS expects that the 2005 elemental sulfur production figures will show that the production is down about 5% due to shutdown of refinery capacity in the Gulf Coast Region as a result of the hurricanes in that region.[29]

Although U.S. consumption of sulfur is growing at a slower rate than domestic production, based on data available through year 2002, the U.S. still consumes more sulfur than is available from domestic sources.[28] A USGS chart showing trends in salient sulfur statistics, including U.S. consumption and domestic production, from 1984 through 2004 is shown in Exhibit III-7.[30]

Exhibit III-7 Trends in Salient Sulfur Statistics

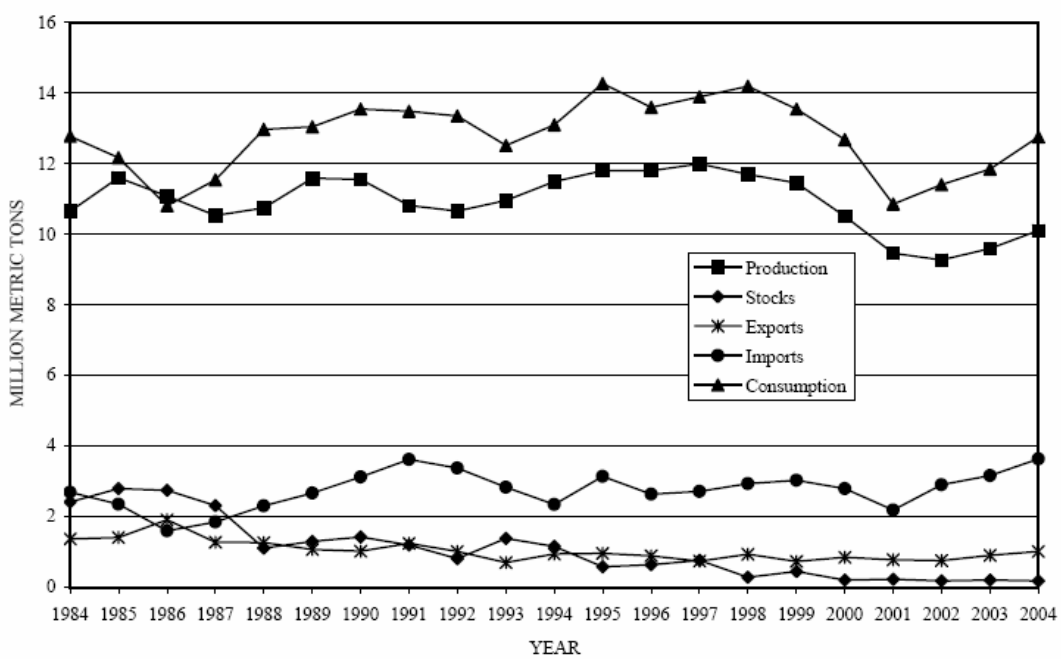

Exhibit Source: USGS 2004 Minerals Yearbook, Sulfur[30]

Expected Trends

The downturn in elemental production in 2005 due to the effects of the hurricanes in the Gulf Coast region is expected to be temporary. Recovery in production from refineries is expected to return to normal early in 2006, and is expected to resume its upward trend.[29] The growth is expected to be supported by:

- new facilities being installed in the U.S. to increase refining capacity
- the capability of current operations to handle higher sulfur crude oil,
- and requirements to comply with environmental regulations enacted in 2000 and 2001 and expected to go into effect in 2006 to reduce sulfur in gasoline and diesel fuel.[27,29]

Byproduct sulfuric acid production decreased significantly since 2000 because four U.S. copper smelters have closed since then. It is not considered likely that any of these will reopen. Production is expected to remain stable unless one or more of the remaining smelters closes.[29]

Price

Based on total shipments and value reported to the USGS, the average value of shipments for all elemental sulfur in the U.S. in 2004 was estimated to be $32.50/metric ton ($29/short ton).[30] This is 13.2% higher than for 2003, and nearly three times the average for 2002. The increase is reported to be a result of a strong U.S. economy, increased production at domestic phosphate fertilizer operations that consume large quantities of sulfur, and increased world-wide sulfur demand.

The price of elemental sulfur varied significantly across the U.S. At the terminals in Tampa, Florida, contract prices were between $60/metric ton and $70/metric ton. On the West Coast, prices were between $15/metric ton and $20/metric ton. The high price in Florida was due to the large sulfur demand in central Florida. The majority of West Coast sulfur was shipped overseas.[30]

This page is intentionally left blank

IV BASE GASIFICATION AND GAS CLEAN-UP DESIGN

This section discusses the results of the task to develop an industrial size base gasification and gas clean-up conceptual design. The basis for the gasification system design is a BGL gasifier, the BGL 1000 gasifier, with a nominal syngas output of 1,000 MMBtu with bituminous coal as the fuel.

Allied Syngas Corporation and Envirotherm GmbH provided gasifier performance and composition, temperature, and pressure of the syngas from the gasification process. A model of the gasification process integrated with syngas coolers and a gas liquor separation system using ASPEN Plus software was developed and mass and energy balance calculations performed using the model to estimate the composition of the syngas to a syngas clean-up process. These data were used to define the functional requirements of the systems, performance estimates, and conceptual specifications of end-use equipment.

An evaluation of alternative syngas clean-up technologies was performed to select a technology for the base syngas clean-up system conceptual design. The gas cleanup process was then integrated into the ASPEN model and additional mass and energy balance calculations were performed to define the conceptual performance of the base gasification and clean-up system.

IV.1 BGL GASIFIER BACKGROUND

The BGL gasifier is a slagging, fixed bed gasifier that was developed based on the design of the Lurgi dry ash gasifier. The Lurgi dry ash gasifier is the oldest and most abundant gasifier in commercial operation in the U.S. and worldwide; about three-fourths of global coal gasification capacity is based on the Lurgi technology. There are 14 operational, oxygen blown Lurgi Mark IV gasifiers at the Dakota Gasification Plant in North Dakota producing syngas from lignite. The syngas is further processed to produce a substitute natural gas for pipeline distribution.

The BGL gasifier was developed from the Lurgi gasifier over a period of about 16 years by British Gas and Lurgi to improve gasification

efficiency and reliability. A side-by-side comparison of the Lurgi dry-ash gasifier and the BGL gasifier is shown in Exhibit IV-1. Modifications in the development of the BGL gasifier included the removal of the mechanical grate in the bottom of the dry-ash gasifier; addition of tuyeres to facilitate injection of oxygen, steam, and recycling tars, and modification to the refractory lining to allow for increased operational temperature in a slagging mode; replacement of the ash lock with a water-filled slag quench vessel and water-filled slag lock vessel, and addition of a stirrer at the top of the gasifier to ensure smooth, continuous flow of caking coals to the gasifier. Like the Lurgi dry-ash gasifier, the BGL is a fixed bed gasifier in which dry solid fuel in a size range from nominally ¼" to 2" is introduced into the top of the gasifier.

Exhibit IV-1 Comparison of Lurgi Dry-ash Gasifier and BGL Gasifier

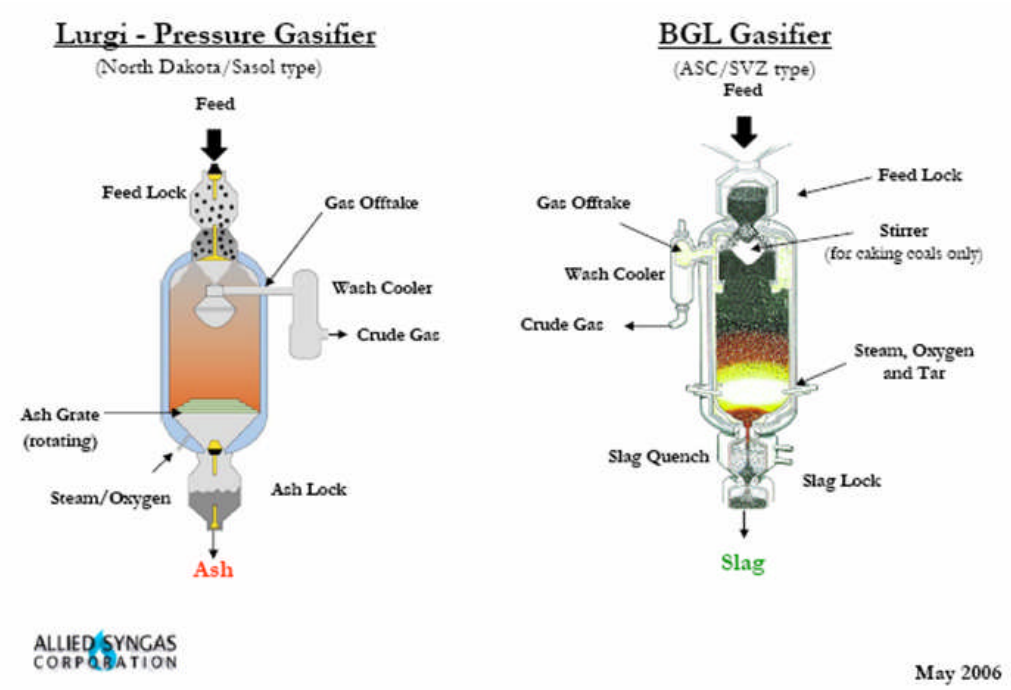

Exhibit Source: Allied Syngas Corporation

The BGL gasifier used as the basis for the conceptual gasification system design in this study is a nominal 12 foot inside diameter unit with commercial operational experience in Germany since 2000. Although the gasifier could be scaled up or down in size and capacity, the BGL 1000 gasifier is the size currently being marketed in the U.S. by Allied Syngas Corporation who has the exclusive license for marketing the BGL gasifier in North America.

The output of the BGL 1000 gasifier when oxygen blown and gasifying a bituminous coal is a medium Btu fuel gas (about 350 Btu/scf HHV) with a nominal energy content of 1,000 MMBtu/hr. Some of the attractive features of the gasifier for industrial applications are as follows:

- Use of as-received coal without drying or other fuel preparation;
- Among the lowest oxygen-to-coal ratio (0.5 to 0.6) and steam-to-coal ratio (about 0.3 to 0.4) of the commercially available gasifiers today thus improving energy efficiency and reducing capital and operating costs;
- High cold gas conversion efficiency (88% to 92%);
- High temperature restricted to hearth;
- Relatively low gas exit temperature (less than 1,000°F) allowing for the use of low cost and simple water quench and syngas coolers for removal of particulate, tars, and oils;
- Low gas temperature increases refractory life;
- Low gas temperature and water-cooled vessel allows for carbon steel materials of construction and thus lowers system capital cost;
- Recycle of tars and oils in the gasifier to extinction improves coal conversion efficiency and increases the energy content of the syngas;
- Dry coal feed with particulate size typical of as-received coal; and
- Low water consumption.

IV.2 BASE GASIFICATION SYSTEM CONCEPTUAL DESIGN

A base gasification system conceptual design was developed based on the BGL 1000 gasifier and the design criteria identified in the Conceptual Design Criteria Document in Section V. The primary criteria include the following:

- A single operating BGL 1000 gasifier
- Tars and oils removed from the syngas recycled into the gasifier
- Oxygen to the gasifier has a 99.5% oxygen purity (not necessary in the production of medium Btu syngas, but the cost difference between 95% purity O_2 and 99.5% purity O_2 not considered

significant based on discussions with ASU suppliers, and will be necessary for SNG production)

- ISO ambient conditions (14.7 psia, 59°F, 60% relative humidity)
- Illinois # 6 coal with the characteristics shown in Exhibit IV-2.
- Limestone as flux with composition consistent with that provided in the DOE/NETL QGESS.
- Syngas cooled to temperature specifications of low temperature Acid Gas Removal (AGR) systems
- Feed lock purge with nitrogen

Exhibit IV-2 Design Illinois #6 Coal Characteristics

Proximate Analysis (As Recd), wt %	
Moisture	6.97
Ash	11.76
Volatile	32.49
Fixed Carbon	48.78
	100.00

HHV, Btu/lb (As Recd)	11,714
LHV, Btu/lb (As Recd)	11,313

Sulfur Analysis (Dry), wt %	
Pyritic	1.74
Sulfate	0.32
Organic	1.32

Mineral Ash Analysis, wt %	
SiO_2	46.6
Al_2O_3	18.6
Fe_2O_3	19.0
CaO	6.7
MgO	1.0
Na_2O	0.4
SO_3	4.3
TiO_2	0.9
K_2O	2.2
P_2O_5	0.1
Total	100.0

Ultimate Analysis (As-Received), wt %	
Carbon	64.98
Hydrogen	4.36
Nitrogen	1.28
Chlorine	0.09
Oxygen	7.41
Ash	11.76
Sulfur	3.15
Moisture	6.97
	100.00

Ash Fusion – Oxidizing, ºF	
Ash Fusion - Softening	2,309
Ash Fusion - Hemispheric	2,354
Ash Fusion - Fluid	2,417

Ash Fusion – Reducing, ºF	
Ash Fusion - Softening	1,994
Ash Fusion - Hemispheric	2,066
Ash Fusion - Fluid	2,156

Notes:

Proximate, Ultimate, and mineral analyses, HHV, and ash fusion data are based on data provided by Allied Syngas Corporation on coal used in BGL tests.

Sulfur analysis based on data for Illinois #6 Herrin seam coal in Penn State Coal Sample Bank and Data Base.

The major components of the gasification process package are illustrated in Exhibit IV-3, and include the following:

- Gasifier
- Feed lock vessel
- O_2, steam, and tar and oil injector
- Slag quench vessel
- Slag lock vessel
- Syngas wash cooler
- Waste heat boiler (primary heat exchanger)
- Tubular syngas coolers, and
- Gas liquor separation

Exhibit IV-3 Illustration of BGL Gasifier

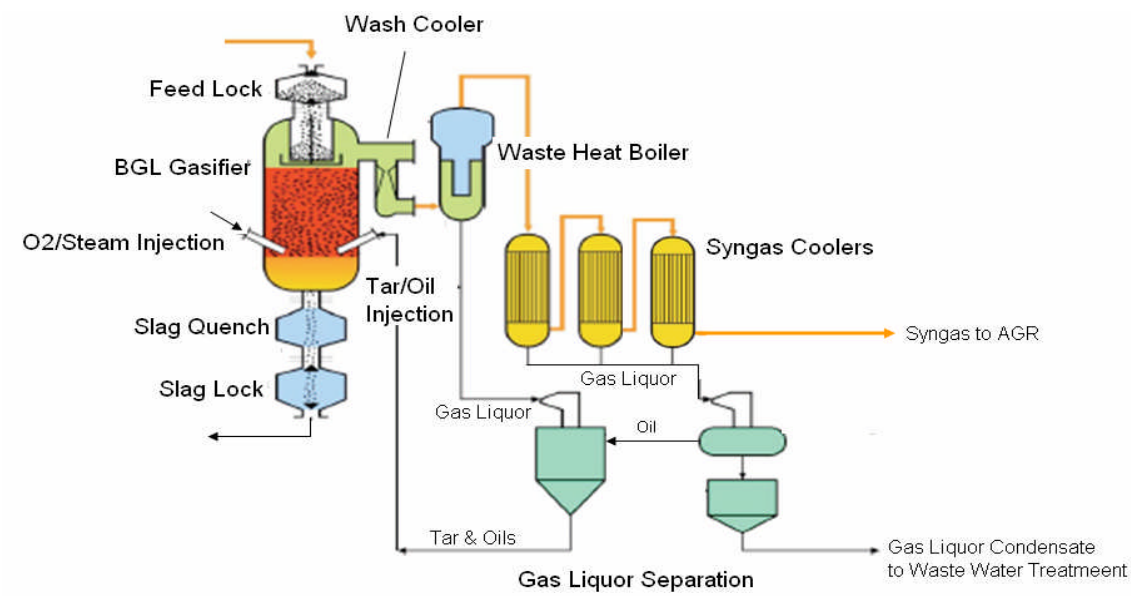

Exhibit Source: Based on schematic provided by Allied Syngas Corporation.

IV.2.1 Component Descriptions

IV.2.1.1 Gasifier

The BGL gasifier is a slagging, fixed bed gasification process utilizing counter current gas/solid flow. It processes about 1,145 tons/day of Illinois #6 coal. The gasification agents, steam and oxygen, are injected through the tuyeres in the lower part of the gasifier into a hot fuel bed. Gaseous reaction products ascend countercurrent to the coal introduced at the top of the gasifier.

The gasifier is designed to achieve a smooth transition of the fuel from the solid to the gaseous phase. Essentially cold solids that enter at the top of the reactor are heated by hot gases rising from the bottom. The counter-current principle results in one of the lowest oxygen consumption rates of commercial gasification processes.

Upon further devolatilization, the coal yields a char or semi-coke that is mainly a carbon skeleton. This process is known as “char conditioning.” The formation of well conditioned char within the stirred zone favors good bed behavior.

The gasifier operates at elevated pressure (nominal 400 psia). The elevated pressure leads to smaller main equipment dimensions and reduces effective gas volume that makes the downstream units smaller in volume and simpler in design.

Liquid slag is discharged by a tap hole arranged centrally at the bottom of the hearth into a water bath in the slag quench vessel. Through rapid cooling, the slag is converted into a solid frit that can simply be disposed of or utilized further.

The gasification media – steam and oxygen – are injected into the gasifier through water-cooled nozzles (tuyeres). Steam and oxygen react immediately with the coke from the gasification zone to form mainly hydrogen and carbon monoxide.

The upward flowing crude gas leaves the fuel bed with a low velocity so that the dust discharge with the gas is minimized.

The crude gas exiting the gasifier enters a wash cooler where the gas is washed intensely with gas liquor, quenched, and saturated with steam. Simultaneously, higher hydrocarbons (tar) condense and dust from the gas is removed. The raw gas is then routed to the first gas cooling stage (waste heat boiler).

IV.2.1.2 Coal/Limestone Feed System

As mentioned previously, the gasification process is under pressure. The coal and limestone (flux) solid mixture is fed to the gasifier reactor via a feed lock operated on a batch basis, loading about 7 tons of coal/limestone mixture during each loading cycle. A limited fuel storage capacity is kept in the top of the gasifier, adding to the safety of the process as it allows the process to continue even if coal lock problems occur. When caking coals are processed, a stirrer can be installed in the top of the gasifier to ensure smooth continuous flow of coal. The coal/limestone batch lock hopper cycling contains the following steps:

- Starting with an empty depressurized coal/limestone lock, the bottom cone valve is closed and the top cone valve is opened. Coal and limestone drop by gravity from a weigh hopper, containing only enough coal/limestone mixture to fill the lock, into the lock.
- The top cone valve is then closed and the lock is pressurized with high pressure nitrogen from the ASU plant (or syngas).
- The bottom cone valve is opened and the fuel gravitates into the gasifier. The system is designed such that for safety reasons the bottom cone valve can be opened only at an even pressure between the gasifier and lock.
- When the lock is empty, the bottom cone valve is closed automatically and the lock is depressurized.
- The top cone valve is opened, the remaining gas is ejected via a dust filter and exhaust gas blower.
- The cycle is then repeated.

IV.2.1.3 Slag Removal System

The slag removal system consists of a natural gas (or syngas) ring burner, slag quench tank, and slag lock. Slag is intermittently tapped and water quenched automatically, to form a frit that is locked out of the system before being collected and transported for disposal or utilization.

To maintain temperature of the slag pool in the hearth, to prevent tap blockage, and to consume any remaining coke particles, a ring burner is installed underneath the central tap hole of the gasifier. Hot burner gases flow through the slag nozzle into the gasifier and keep the slag in the hearth. After a specific slag height has been reached, as indicated by the differential pressure, the burner is

automatically switched to part load operation. The excess pressure of the quench vessel is slightly reduced (below the gasifier pressure) and the liquid slag is discharged through the slag tap into a water-filled slag quench vessel. Upon reaching the minimum slag level, the burner returns to normal operating mode and the tapping is ended. The slag level is controlled automatically via a differential pressure between the quench vessel and slag hearth.

While quenched, the slag forms a glassy granular fritted material of approximately 1/8 inch in diameter. The granular material gravitates further into the water filled slag lock. The sensible heat of the slag is removed via a cooling circuit.

The slag lock works according to the same principle as the coal/limestone lock. It is filled with water and pressurized. The slag is discharged, via a chute, onto a slag conveyor belt and transported to intermediate storage.

IV.2.1.4 Syngas Wash Cooler

Raw gas leaves the top of the gasifier above the fuel bed at a temperature less than 1,000°F and enters the wash cooler (water quench) directly flanged to the gasifier. The raw gas is directly quenched, cooled, and saturated by circulated gas liquor from the gas liquor separation system. The raw gas temperature is reduced to about 330°F. Simultaneously, dust carried with the gas and tar is removed from the gas.

The multi-phase flow from the wash cooler is then directed to the waste heat exchanger (primary heat exchanger).

IV.2.1.5 Waste Heat Exchanger (Primary Heat Exchanger)

The raw gas from the wash cooler enters the primary heat exchanger and is cooled to about 311°F by transferring heat to boiler feed water and generating low pressure steam (75 psia / 308°F). Gas liquor and hydrocarbon condensate are discharged automatically from the sump of the heat exchanger to the gas liquor separation unit. The low pressure steam can be used in processes in the supporting systems.

IV.2.1.6 Syngas Cooling System

The syngas from the primary heat exchanger is cooled via three tubular heat exchangers from about 311°F to about 95°F before it is transported to a syngas cleanup process. Circulating water is used

to cool the syngas. Gas liquor condensate from the coolers is discharged to the liquor separation process for removal of hydrocarbons. The cooled syngas is transported to a syngas cleanup system

IV.2.1.7 Gas Liquor Separation and Tar/Oil Re-injection System

The gas liquor separation and tar/oil reinjection system removes tars and oils from the gas liquor from the primary heat exchanger (waste heat exchanger) and syngas coolers and recycles the tars/oils back to the gasifier.

The tars, oils, and solids are removed from the gas liquor by gravity separation, achievable by an adequate settling time in the tar and condensate separators, and a sufficient difference in the specific gravity between water and the tar/oil fractions. Tars and oils are collected in a liquids products tank and then recycled from the tank to the gasifier.

A conceptual elevation drawing of a BGL 1000 gasification system, with spare gasifier, is shown in Exhibit IV-4.

Exhibit IV-4 Conceptual Elevation of BGL 1000 Gasification System with Spare Gasifier

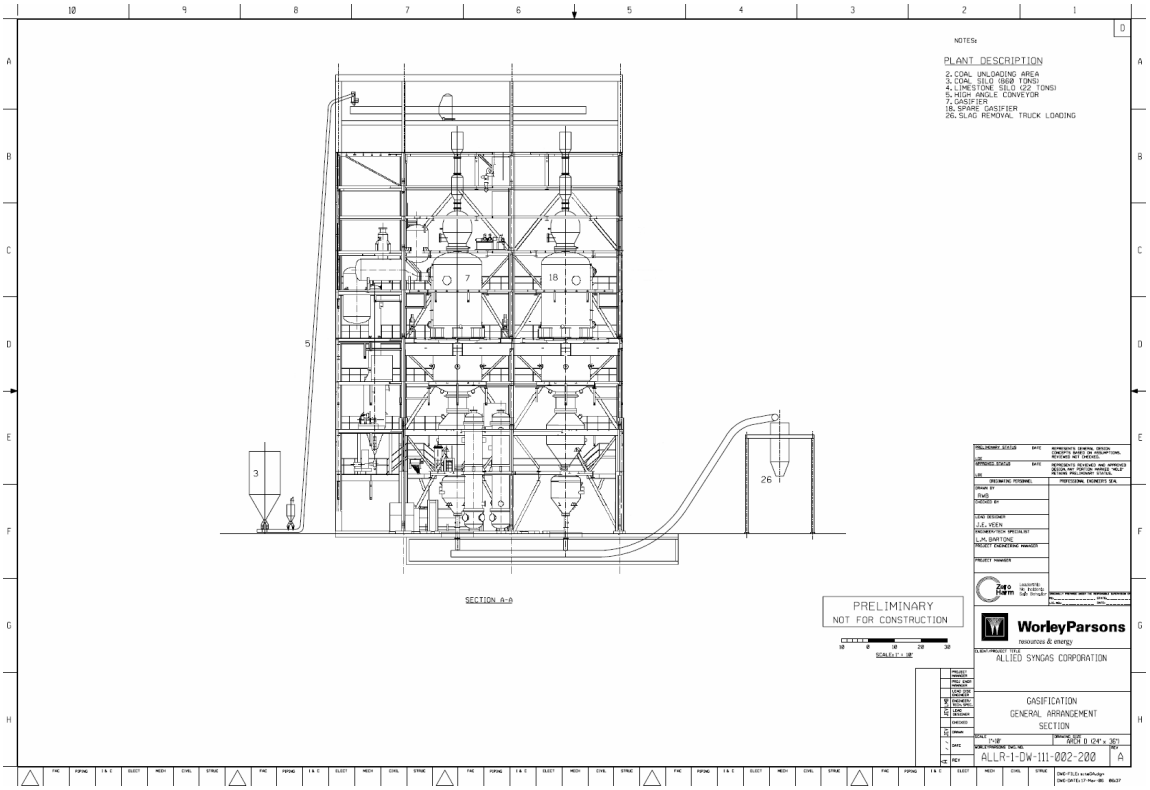

IV.2.2 Performance and Syngas Composition

The estimated performance of the BGL 1000 gasification process when gasifying the reference Illinois #6 coal is summarized in Exhibit IV-5. The gasifier can process about 95,409 lb/hr (1,145 tons/day) of the bituminous coal with an energy content of about 1,118 MMBtu/hr. It consumes about 2,409 lb/hr of limestone flux, 48,053 lb/hr of oxygen (0.50 O_2 to coal ratio), 29,158 lb/hr of steam (0.31 steam to coal ratio), and 4,409 lb/hr of nitrogen for feed lock pressurizing and purging. Approximately 158,344 lb/hr of cooled syngas (at 95F and 333 psia) is produced with an energy content of about 1,032 MMBtu/hr. Approximately 13,837 lb/hr of slag from the coal ash, and about 17,939 lb/hr of low pressure steam is generated in the waste heat boiler. This steam is available for use in the supporting processes such as the gas liquor separation system, waste water treatment system, AGR system, and sulfur recovery system. The temperature of the syngas from the wash cooler is too low to generate steam at sufficient pressure to be used in the gasifier. Therefore, an alternate source of steam for the gasifier must be provided. However, the steam demand of the gasifier is low compared to most gasification systems.

Exhibit IV-5 Summary of Base Gasification System Performance

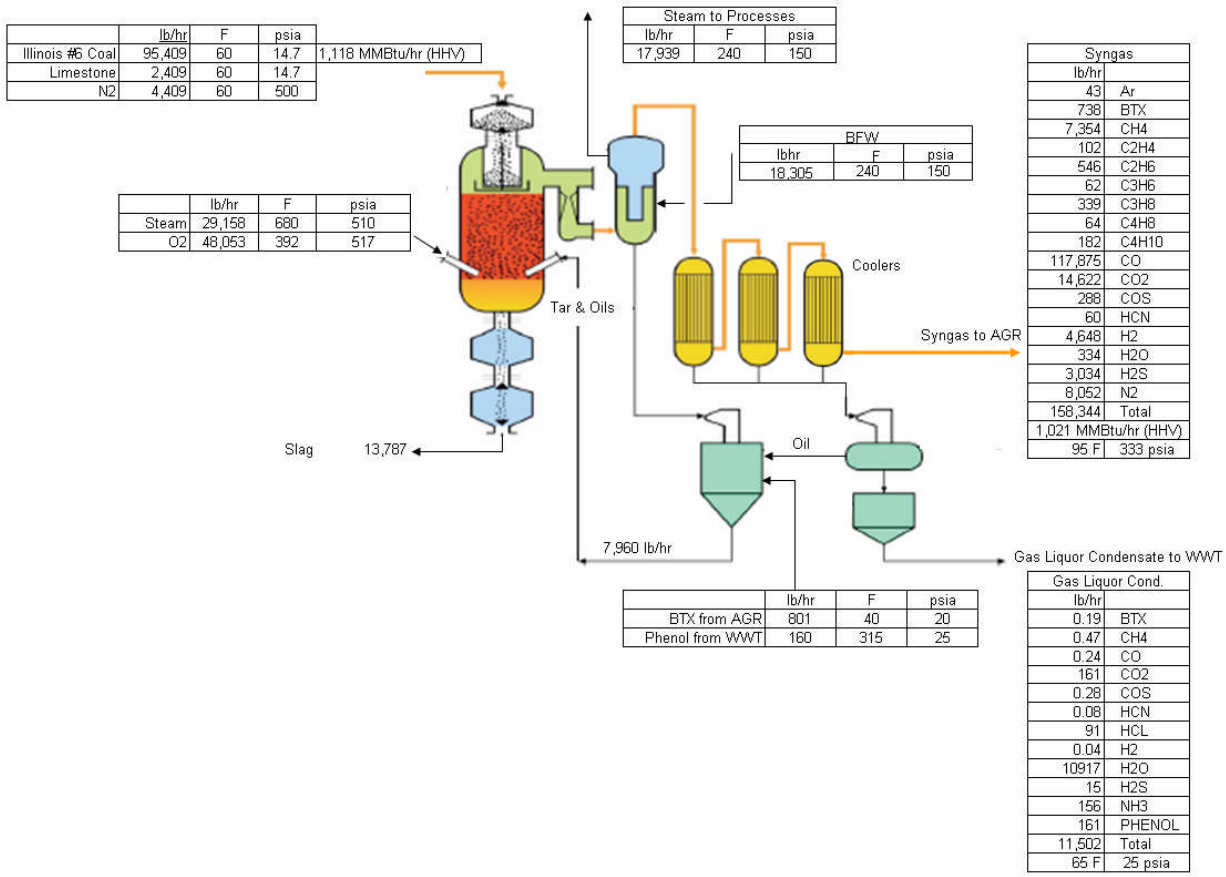

The composition of the raw syngas from the process is also shown in Exhibit IV-5. The raw gas stream from the BGL gasifier contains typical components found in any synthesis gas stream generated through coal gasification. These components include CO (74 wt.%, 54 vol.%), H_2 (3 wt.%, 30 vol.%), CO_2 (9 wt.%, 4 vol.%), and H_2O (0.2 wt.%, 0.2 vol.%). Reduced sulfur species such as H_2S and COS are also present as expected along with elemental Ar and N_2. What is atypical of the raw gas stream from the BGL gasifier (relative to high temperature gasification processes) is the presence of naphtha (BTX – benzene, toluene, xylene) and a relatively large amount of longer chain hydrocarbons in the form of olefins and paraffins due to the low temperature of the syngas from the gasifier. These latter constituents in the syngas are important when considering alternative acid gas removal (AGR) processes. The AGR process selected for integration with the BGL gasifier must meet the following functional requirements:

- Remove H_2S and COS to limit the emission of SO_2 in a downstream combustion process, or provide a virtually sulfur-

free synthesis gas for downstream catalytic conversion of the synthesis gas to a value added chemical,

- Generate a concentrated H_2S stream with contamination levels meeting requirements for producing a high quality elemental sulfur product in the Claus Unit,
- Maximize hydrocarbon retention in the syngas product or recycle hydrocarbons back to the gasifier, and
- Eliminate generation of hazardous effluents

IV.3 SYNGAS CLEANUP SYSTEM CONCEPTUAL DESIGN

The base syngas cleanup system consists of an AGR system and a Claus sulfur recovery unit. The AGR approach used with the BGL gasifier has traditionally been the Rectisol process. The Rectisol process is a physical solvent absorption process that uses methanol as the solvent and operates at very low temperatures (typically less than -80°F). This proven solution can deep clean sulfur species as well as accommodate the hydrocarbon material contained in the raw synthesis gas. However, because it operates at such low temperatures, it requires a refrigeration unit that generates an auxiliary power load that is larger than those generated with other acid gas removal processes. There also exists a perception that the Rectisol Process is more complicated than other acid gas removal technologies.

In order to ensure that the use of the Rectisol Process is the best overall choice for the BGL 1000, alternative AGR solvents for application to the BGL 1000 gasifier were screened. The motivation for this screening study includes: (a) lack of published data detailing the use of moving-bed gasifiers with AGR processes other than the Rectisol Process, (b) the relative complexity of the Rectisol Process, and (c) the relative high operating load and cost of the Rectisol Process.

IV.3.1 AGR Process Evaluation

AGR processes can take a variety of approaches that include low temperature liquid solvents, high temperature solid sorbents, membranes, and other mechanically based selective classification systems. The only commercially viable AGR processes currently in operation are low temperature liquid solvent processes.

There are three broad classes of low temperature liquid solvent AGR processes: chemical absorption processes, physical absorption

processes, and hybrid processes that are not purely chemical or physical. All low temperature liquid solvent AGR processes use (a) as a minimum, a two-column system consisting of an absorption column followed by a regenerator (stripper) column and, (b) a liquid solvent to absorb acid gases from the raw synthesis gas generated in the coal gasification process. The two columns are typically tray-type columns but may be packed columns in smaller applications.

In a chemical absorption process the acid gases react to an intermediate liquid solvent species and are removed from the bottom of the absorber column with the rich solvent. In a physical absorption process the acid gases are physically absorbed into the liquid solvent and are removed from the bottom of the absorber column with the rich solvent. Hybrid processes use both chemical and physical absorption to remove acid gases from the raw gas stream. In each case the sweet synthesis gas is removed from the top of the absorber column. The acid gases are liberated in the regenerator by indirectly heating the solvent. Lean solvent from the regenerator is then recirculated back to the absorber.

Almost all commercially operated chemical absorption processes are based on the use of methyl diethanol amine (MDEA). These processes are offered by several competing technology vendors, each a slight variation of the other, and operate under a variety of trade names. There are two physical absorption processes currently in commercial operation. The Selexol Process uses a glycol solvent and the Rectisol Process uses methanol as a solvent. There are also two commercially available hybrid processes: Sulfinol and FLEXSORB.

The following vendors or users were contacted for information on the four processes that incorporate all of the commercially available AGR processes:

- Rectisol Process – Dakota Gasification Plant and Envirotherm GmbH
- The Selexol Process – UOP
- The Ucarsol Amine Process – Dow Chemical Company
- The Hybrid FLEXSORB SE Process – ExxonMobil

Sud Chemie was also contacted in regards to their COS Hydrolysis Catalyst. In order to control the sulfur content of the sweet gas, a COS Hydrolysis Reactor would be required if the AGR process uses a solvent that does not selectively remove COS along with H_2S. In

the Hydrolysis Reactor, COS would be hydrolyzed to H_2S. The H_2S would be removed in the selected AGR process.

IV.3.1.1 Rectisol Process

As previously discussed, the AGR approach used with the BGL gasifier has traditionally been the Rectisol process. The Rectisol process is a physical solvent absorption process that uses methanol as the solvent and operates at very low temperatures (typically less than -80° F). It is a well known and widely used process. Rectisol processes have operated reliably for decades behind many types of gasification processes including Lurgi, BGL, Texaco, and Shell at installations such as Dakota Gasification in North Dakota, SASOL in South Africa, Schwarze Pumpe in Germany, Eastman in Tennessee, and Shell in the Netherlands. Information provided by Lurgi indicates that there are about 59 gasification facilities world-wide, or 53% of the gasification facilities excluding Texaco natural gas POX, that have operating Rectisol processes, and about seventy-five percent of the world's syngas produced from oil residue, coal, and wastes is purified by the Rectisol process.[31]

The Rectisol Process has several unique operating characteristics that lend it to BGL gasifier application. One feature is the ability to remove HCN, NH_3, and BTX in a prewash step. The HCN, NH_3, and BTX can be easily liberated from the solvent and the solvent can then be recirculated and reused within the system. The acid gases, primarily H_2S and COS, are removed in secondary steps within the same absorber vessel. Paraffins and olefins absorbed along with the acid gases can be liberated from the acid gases and recombined with the sweet gas product. Another unique feature of the Rectisol Process is the ability to remove both COS and H_2S and concentrate these sulfur species in a single acid gas stream for treatment in a Claus unit. The Rectisol Process can remove sulfur to the low levels necessary to meet specifications of methanation catalysts, and can provide deep removal of CO_2 for SNG production and/or CO_2 sequestrations.

There are, however, some drawbacks to the process. In order to generate the very low operating temperatures, which can be as low as -100°F, the Rectisol Process requires a refrigeration unit that generates a large auxiliary power load. The Rectisol Process is also complicated and requires several regeneration vessels in order to liberate the acid gases and to regenerate the solvent. The advantages and disadvantages of the Rectisol AGR process are summarized in Exhibit IV-6.

Exhibit IV-6 Advantages and Disadvantages of the Rectisol Process

ADVANTAGES	DISADVANTAGES
• Removes HCN, NH_3, and BTX in the prewash step • HCN, NH_3, and BTX are easily liberated from the solvent allowing the BTX to be recycled to the gasifier and the solvent to be recycled in the AGR • H_2S and COS are removed in the secondary step in the same absorption vessel and concentrated in a single acid gas stream for treatment in the Claus Unit • Paraffins and olefins absorbed along with acid gases can be liberated from the acid gases and recombined with the sweet syngas product • There is significant Rectisol operating experience with fixed bed gasifiers and is the only AGR operating commercially with this type gasifier • Can remove sulfur to low levels required to meet methanation catalyst specifications • Provides deep CO_2 removal that is required for SNG production and/or CO_2 sequestration.	• Low operating temperatures (as low as -100°F) requires refrigeration system with relatively high auxiliary power load • Relatively complex system with several regeneration vessels to liberate acid gases and regenerate solvent, resulting in relatively high cost

IV.3.1.2 The Selexol Process

As previously discussed, the Selexol Process is a physical (rather than chemical) AGR process that uses dimethyl ether (DME) of polyethylene glycol as the solvent. Selexol is a well known and widely used process that favors high pressure operation to treat both natural and synthesis gas streams.

UOP, a licensor of the Selexol process, was contacted and asked to assess the viability of their technology to a BGL 1000 application. UOP concluded that Selexol was an inappropriate fit for the BGL 1000. UOP's reasons for this conclusion are as follows[32].

- "The feed gas contains 700 ppmv COS which requires the addition of a COS Hydrolysis Unit."
- "The feed gas contains 1100 ppmv BTX, all of which will dissolve in the Selexol Solvent and come out with the H_2S / CO_2 Acid Gas in unacceptable concentrations for the SRU [sulfur

recovery unit]. UOP does not have a way to remove it [BTX] separately from the Acid Gas. UOP is not certain as to how to install a BTX pretreatment step on the feed gas."

- "The feed gas contains approximately 500 ppmv of Paraffins and Olefins, which will mostly dissolve in the Selexol Solvent. Some can be recovered in a Rich Solvent Flash Step with recycle to the feed gas, but not all. Those that do not will contaminate the Acid Gas to unacceptable levels."

- "The operating pressure is on the low side (340 psia) for favorable Selexol economics."

As mentioned above, Selexol will not remove COS from the raw gas stream. Permitting the BGL 1000 would prohibit the emission of sulfur contained in the COS. In order to limit sulfur emissions to within permit values, the COS would have to be hydrolyzed to H_2S so that the sulfur could be removed in the Selexol process. Discussions with Sud Chemie revealed that a suitable catalyst is available for use with the BGL 1000 raw gas stream.

The use of a COS Hydrolysis Unit would require reheating the raw gas from either (a) the waste heat boiler exit temperature of 311°F or (b) the last raw gas cooler temperature of 95°F to the COS hydrolysis reaction temperature (approximately 400°F). This steam would be an additional, albeit small, auxiliary power loss to the system. Also, additional process equipment in the form of heat exchangers, reaction vessel, and pumps and piping would have to be added to the process configuration. This would add complexity and increase the capital and operating cost of a BGL 1000 based gasification system.

A pretreatment process to remove BTX from the raw gas stream could be installed upstream of the Selexol Process and downstream of the COS Hydrolysis Unit. This process could take the form of a methanol, Purisol (1-methyl-pyrrolidone-2 (NMP), or light oil wash in an absorption tower. The BTX would be liberated and the solvent regenerated with additional process equipment including heat exchangers and distillation (regeneration) columns. Again, this would add complexity and increase the capital and operating cost of a BGL 1000 based gasification system.

The fact that Selexol will generate an acid gas stream with elevated paraffin and olefin content is a serious issue because this performance characteristic can not be mitigated. High acid gas

hydrocarbon content will result in a low grade sulfur product from the Claus plant. As this sulfur product is usually a salable item, this performance characteristic would make the use of Selexol in a BGL 1000 unattractive.

The advantages and disadvantages of the Selexol Process for application to the BGL gasifier are summarized in Exhibit IV-7.

Exhibit IV-7 Advantages and Disadvantages of the Selexol Process

ADVANTAGES	DISADVANTAGES
• Well-know and widely used process • Typically is a two-column process versus three columns required in the Rectisol process	• Cannot remove COS, thus requiring additional of a COS hydrolysis unit and reheating the syngas to about 400°F before introducing it into the hydrolysis unit. Requires additional steam generation and equipment. • BTX will dissolve in solvent and UOP does not have a way of removing it separate from the acid gas. Concentrations will be unacceptable to the Claus Unit. BTX can be removed in a pretreatment process after COS hydrolysis using methanol, Purisol, or light oil wash but would required addition of at least two columns and would likely increase cost significantly. • Paraffins and olefins will dissolve in the solvent and contaminate the acid gas to the Claus Unit resulting in a low-grade sulfur byproduct.

WorleyParsons agrees with UOP that the Selexol process is an inappropriate choice to displace the currently used Rectisol process. The principal factor for this conclusion is that the hydrocarbon material contained in the raw synthesis gas would dissolve in the Selexol solvent and become concentrated in the resulting acid gas. This would contaminate the sulfur product generated by the Claus plant resulting in a non-salable product. This contamination can not be mitigated by any pretreatment alternatives. For this reason, Selexol has been dropped from possible application to the BGL 1000 process.

IV.3.1.3 The Ucarsol Amine Process

The Ucarsol Process is a chemical AGR process that uses MDEA as the solvent. This process is well known and currently marketed by the Dow Chemical Company. Dow Chemical Company performed a heat and material balance for an Ucarsol AGR Process using the BGL 1000 raw gas composition.

The Ucarsol Process, which uses MDEA, will not remove COS from the raw gas stream. Permitting the BGL 1000 would prohibit the

emission of sulfur contained in the COS. In order to limit sulfur emissions to within permit values the COS would have to be hydrolyzed to H_2S so that the sulfur could be removed in the Ucarsol process. Discussions with Sud Chemie, assuming the existence of a COS Hydrolysis Unit, revealed that a suitable catalyst is available for use with the BGL 1000 raw gas stream.

As previously discussed, the use of a COS Hydrolysis Unit would require reheating the raw gas from either (a) the waste heat boiler exit temperature of 311°F or (b) the last raw gas cooler temperature of 95°F to the COS hydrolysis reaction temperature (approximately 400°F). This steam would be an additional, albeit small, auxiliary power loss to the system. Also, additional process equipment in the form of heat exchangers, reaction vessel, and pumps and piping would have to be added to the process configuration. This would add complexity and increase the capital and operating cost of a BGL 1000 based gasification system.

The results of the process simulation show that the Ucarsol Process can remove H_2S down to about 5 ppm in the sweet synthesis gas. The simulation also showed that H_2S could be concentrated to 40% in an acid gas stream suitable for treatment in a Claus unit. The Ucarsol Process will also remove some of the BTX from the inlet raw gas. Dow believes that most of the BTX would be recovered in the overhead condenser of the regenerator. Dow also stated that they believe a three-phase separation system used as a reflux drum could separate out the BTX as a separate liquid stream and that the BTX left in the acid gas stream would not result in an off-spec sulfur product from the Claus plant. This approach of capturing BTX in the Ucarsol solvent is unproven and would need additional process design and testing. It would also add complexity and cost to the basic Ucarsol Process.

As discussed for the Selexol Process, a pretreatment process to remove BTX from the raw gas stream could be installed upstream of the Ucarsol Process and downstream of the COS Hydrolysis Unit. Besides the pretreatment options forwarded to DOW (methanol, Purisol (1-methyl-pyrrolidone-2 (NMP), or light oil), Dow suggested a technology provided by SouthTex Treaters. This option will need to be explored if the Ucarsol Process is felt to be a viable option. Again, this would add complexity and increase the capital and operating cost of a BGL 1000 based gasification system.

The Ucarsol process is a possible alternative to the Rectisol Process. However, its use would require a COS Hydrolysis Unit as

well as the possibility of a BTX prewash or the use of a three-phase reflux drum on the regenerator column. The BTX prewash requires the addition of at least two column towers that represent additional cost and process complexity. The alternative of using a three-phase reflux drum to remove BTX from the regenerator overheads may or may not result in an off-spec sulfur product. A more detailed cost study beyond the scope of the current study would be required to determine if the Ucarsol Process with the additional equipment required is more economically feasible than the Rectisol Process.

The advantages and disadvantages of the Ucarsol Amine Process for application to the BGL gasifier are summarized in Exhibit IV-8.

Exhibit IV-8 Advantages and Disadvantages of the Ucarsol Process

ADVANTAGES	DISADVANTAGES
• Well known and marketed by DOW Chemical Company • Uses MDEA as solvent with which there is experience in IGCC plants with entrained flow gasifiers • May remove and allow for recovery of BTX	• Cannot remove COS, thus requiring additional of a COS hydrolysis unit and reheating the syngas to bout 400°F before introducing it into the hydrolysis unit. Requires additional steam generation and equipment. • DOW believes that BTX can be removed, but may require a three-phase separation system used as a reflux drum. Approach of capturing BTX in solvent is unproven and would need additional process design and testing • BTX could be removed with pretreatment process but would require the addition of at least two columns, adding additional complexity and likely significant cost • Simulation indicates that sulfur can be removed from syngas to < 20 ppm to meet syngas criterion, but probably not low enough for SNG criterion

IV.3.1.4 The Hybrid FLEXSORB SE Process

The FLEXSORB SE Process is a hybrid physical/chemical AGR process that uses severely hindered amines as the solvent. This well-known process is marketed by the ExxonMobil Company. ExxonMobil Company performed a heat and material balance for a FLEXSORB SE Process using the BGL 1000 raw gas composition.

The FLEXSORB SE Process will not remove a large percentage of the COS from the raw gas stream. As previously discussed,

permitting the BGL 1000 would prohibit the emission of sulfur contained in the COS, and COS would have to be hydrolyzed to H_2S so that the sulfur could be removed in the absorber. A COS Hydrolysis Unit would require additional process equipment in the form of heat exchangers, reaction vessel, pumps, and piping. This would add complexity and increase the capital and operating cost of a BGL 1000 based gasification system.

The results of the process simulation show that the FLEXSORB SE Process can remove H_2S down to about 20 ppm in the sweet synthesis gas. The simulation also showed that H_2S could be concentrated to over 50% in an acid gas stream suitable for treatment in a Claus unit without being accompanied by appreciable amounts of hydrocarbons including BTX. The bulk of the hydrocarbons would remain with the treated synthesis gas.

The FLEXSORB SE with COS Hydrolysis Unit may be the most viable alternative to the Rectisol Process. A detailed economic evaluation and system study would be required to determine if this process is desirable from a process and cost standpoint.

The advantages and disadvantages of the Hybrid FLEXSORB SE Process for application to the BGL gasifier are summarized in Exhibit IV-9.

Exhibit IV-9 Advantages and Disadvantages of the Hybrid Flexorb SE Process

ADVANTAGES	DISADVANTAGES
• Well known and marketed by ExxonMobil Company • H_2S can be concentrated to 50% in the acid gas stream unaccompanied by appreciable amounts of hydrocarbons, including BTX • Bulk of the hydrocarbons remain in the treated syngas	• Will not remove large percentage of COS, thus requiring additional of a COS hydrolysis unit and reheating the syngas to bout 400°F before introducing it into the hydrolysis unit. Requires additional steam generation and equipment. • Removes sulfur to only about 20 ppm in the syngas

IV.3.1.5 AGR Process Selection Summary

In summary, the Rectisol Process was selected as the best overall technology for the base syngas cleanup conceptual design based on the following:

- The Rectisol Process has the ability to remove H_2S and COS to the levels meeting the sulfur concentration criteria for the cleaned gas, remove BTX for recycle back to the gasifier, and liberate paraffins and olefins absorbed along with the acid gases from the acid gases for recombining with the sweet syngas product. There is also significant operating experience with the fixed bed gasifier, and it is the only AGR operating commercially with this type gasifier.
- The Selexol Process is not a viable alternative because of hydrocarbon contamination of gas to the Claus Unit
- The Ucarsol Process is marginally applicable to syngas production with the BGL gasifier. A COS Hydrolysis Unit would be required as well as possibly a BTX pretreatment process.
- The Hybrid FLEXSORB SE process would require the addition of a COS Hydrolysis Unit increasing the complexity and cost, and cannot meet the sulfur removal requirements for SNG production.

IV.3.2 Syngas Cleanup System Conceptual Design

The estimated performance of the syngas cleanup system integrated with the base BGL 1000 gasification process is summarized in Exhibit IV-10. Approximately 158,700 lb/hr of clean product syngas with an energy content of about 998 MMBtu/hr is produced, resulting in a net gasification cold gas efficiency of 89.3%. The Rectisol process in the Reference plant is operated to maintain the sulfur content in the product syngas less than 3 ppmv (<0.3 gr/100scf), comparable to the sulfur content of pipeline natural gas. About 3,000 lb/hr of elemental sulfur is produced in the Claus unit.

Exhibit IV-10 Summary of Base Syngas Cleanup System Performance

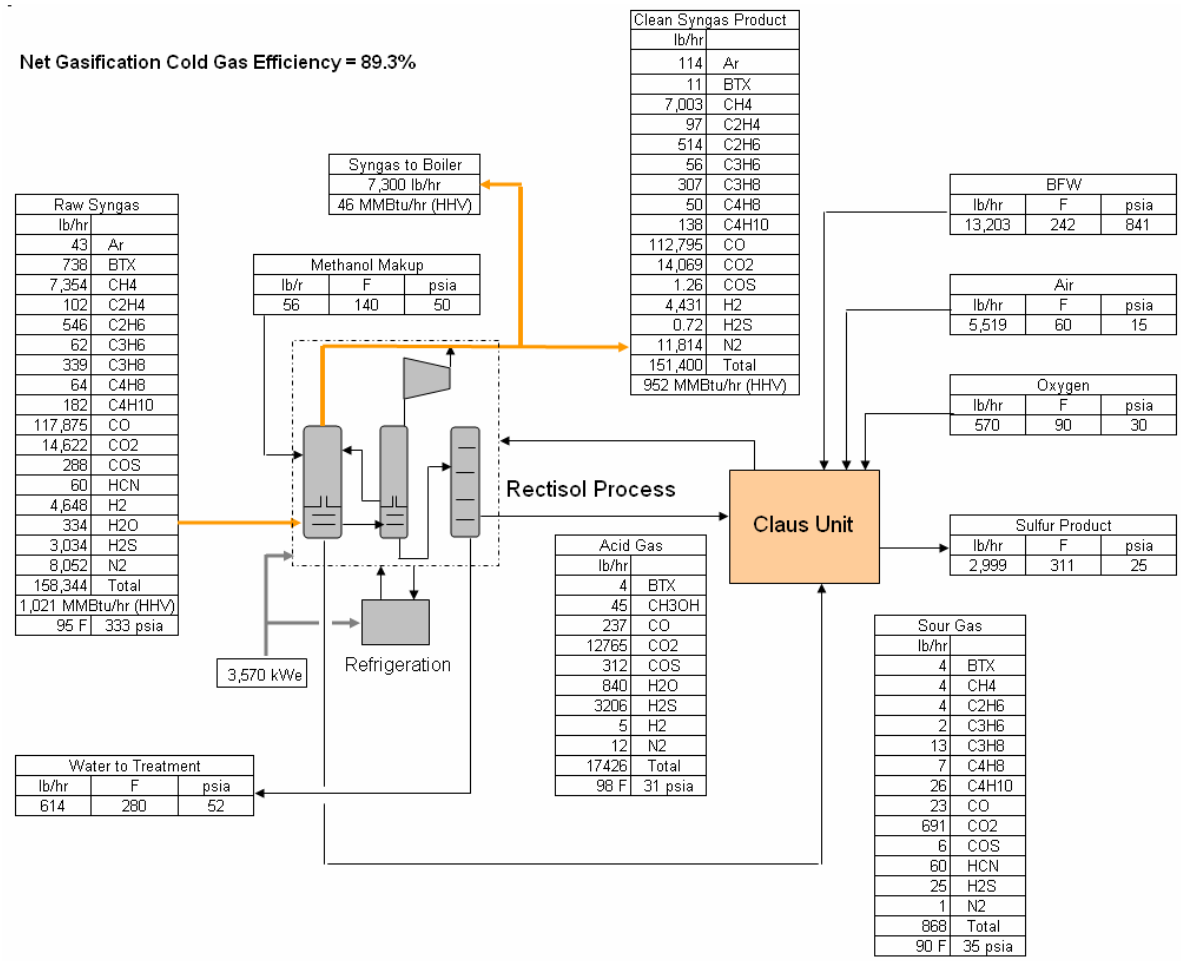

IV.3.2.1 Rectisol AGR System

The approximately 158,344 lb/hr of raw gas from the syngas coolers enters an H_2S absorber after being cooled by cleaned syngas leaving the absorber. In the absorber, the raw gas is washed clean of not only H_2S and COS, but also HCN, NH_3, and BTX. The majority of the methanol is recovered in a hot regenerator and methanol stripper. A small amount of fresh methanol is required (about 30 lb/hr)

The raw gas is first prewashed in the bottom section of the absorber and then enters the main section of the absorber via a chimney tray. Laden prewash methanol leaving the bottom of the absorber is routed to a sour flash. The sour gas from the sour flash is directed to the Claus plant. The liquid from the sour flash is sent to a stabilizer tank, where water is introduced, and then to a decanter. BTX from

the decanter is transported to the liquids product tank in the gas liquor separation system for recycle back into the gasifier. The remaining liquid from the decanter is heated by low pressure steam prior to being introduced into the methanol stripper. Water from the stripper is directed to the waste water treatment system.

The sulfur-free gas leaving the absorber at the top is reheated in the raw syngas cooler. CO_2, CO, and H_2 recovered from the laden methanol in a flash regenerator is compressed and mixed with the sulfur-free syngas. The resulting product syngas, at a pressure of about 300 psia, is available for transport to the syngas-fired boiler and industry end-user.

The laden methanol leaving the main stage of the H_2S absorber is fed to a flash regenerator for recovery of the bulk of the co-absorbed CO_2 as well as the CO and H_2 which are also co-absorbed in very small amounts. Tail gas from the Claus unit is also compressed and fed to the flash regenerator. The major portion of the gas that leaves the flash regenerator at a pressure of about 20 psia is compressed and added to the syngas from the H_2S absorber. A small amount of flashed gas is directed to the hydrogenation reactor in the Claus unit.

The methanol from the flash regenerator enters the hot regenerator for final regeneration by stripping with methanol vapor generated in a reboiler by means of low pressure steam. The acid gas leaving the top of the regenerator is cooled to recover methanol, which is recycled to the regenerator. The acid gas is then transported to the Claus unit for recovery of the sulfur in the gas. Hot regenerated methanol is pumped back to the H_2S absorber via refrigeration cooler.

Water from the methanol stripper is directed to the waste water treatment system prior to being recycled or discharged to the environment.

Refrigerant for cooling the various flow streams is supplied by a refrigeration system requiring about 1,570 kW of electrical power. Pumping and compressor power requirements for the Rectisol process total about 2,000 kWe.

IV.4 CLAUS PROCESS DESCRIPTION

The Claus process recovers about 99% of sulfur from the acid gas and sour gas from the Rectisol, liquor separation, and waste water treatment processes in the form of elemental sulfur. The Claus process consists of a Claus furnace and two catalytic stages. The oxidant to the Claus furnace is air enriched to about 30% oxygen by weight. The feed streams are first preheated using steam and then enter the Claus furnace where about 75% of the H_2S is reacted to SO_2. The exhaust is passed through a waste heat boiler to generate steam for the process, and the SO_2 and remaining H_2S in the exhaust is then reacted to sulfur and water in the catalytic stages. Tail gas from the process is hydrogenated and quenched in a water wash tower and then recycled to the flash regenerator in the Rectisol process. Blowdown from the process is sent to the waste water treatment system. Export steam is transported to the low pressure and high pressure steam headers, and condensate to the flash tank in the steam system. Sulfur product is condensed and collected in a sulfur pit for transport to a sulfur product storage area.

About 570 lb/hr of oxygen is consumed by the process. About 13,200lb/hr of intermediate pressure steam is generated in the process.

Industrial Size Gasification for Syngas, Substitute Natural Gas and Power Production

Section V – Conceptual Design Requirements Document

DOE/NETL-401 / 040607

FR-53769211

April 2007

Disclaimer

This report was prepared as an account of work sponsored by an agency of the United States Government. Neither the United States Government nor any agency thereof, nor any of their employees, makes any warranty, express or implied, or assumes any legal liability or responsibility for the accuracy, completeness, or usefulness of any information, apparatus, product, or process disclosed, or represents that its use would not infringe privately owned rights. Reference therein to any specific commercial product, process, or service by trade name, trademark, manufacturer, or otherwise does not necessarily constitute or imply its endorsement, recommendation, or favoring by the United States Government or any agency thereof. The views and opinions of authors expressed therein do not necessarily state or reflect those of the United States Government or any agency thereof.

Industrial Size Gasification for Syngas, Substitute Natural Gas and Power Production

Section V – Conceptual Design Requirements Document

DOE/NETL-401 / 040607

FR-53769211

April 2007

NETL Contact: DE-AC26-04NT41817.401.01.05.002

Office of Systems Analysis and Planning Support

Prepared by:

Leonard M. Bartone, Jr., P.E.
Jay White
WorleyParsons Group Inc.

Research and Development Solutions, LLC.

National Energy Technology Laboratory
www.netl.doe.gov

This page is intentionally left blank

SECTION V TABLE OF CONTENTS

Section V Table of contents ..... V-i

Section V List of Exhibits ..... V-v

Terminology ..... V-vii

Acknowledgements ..... V-ix

V.1. General Basis and Requirements V-1

V.1.1 Project Overview V-1

V.1.2 Purpose of This Design Requirements Document V-2

V.1.3 Site Criteria V-2

V.1.4 Weather and Climate V-2

V.1.5 Emissions and Regulatory Requirements V-3

V.1.5.1 NO_x Emissions Design Criteria V-8
V.1.5.2 SO_2 Emissions Design Criteria V-8
V.1.5.3 Particulate Emissions Design Criteria V-9
V.1.5.4 Mercury Design Criteria V-9
V.1.5.5 Water Design Criteria V-10
V.1.5.6 Waste Criteria V-12
V.1.5.7 Permitting, Licensing, and Regulatory Approval Requirements for Fuel Switching V-12
V.1.5.8 Permitting, Licensing, and Regulatory Approval Requirements for New Gasification Projects V-15

V.1.6 Fuels V-17

V.1.6.1 Illinois # 6 Coal V-17
V.1.6.2 Powder River Basin Coal V-21
V.1.6.3 Natural Gas V-25
V.1.6.4 Start-Up Fuel V-26

V.1.7 Oxygen Supply V-26

V.1.8 Nitrogen V-26

V.1.9 Limestone and Reagents V-27

V.1.9.1 Limestone Composition V-27
V.1.9.2 Limestone Size Distribution V-27

V.1.10 Specification for Pipeline Natural Gas Quality V-28

V.1.11 Electrical Power V-28

V.1.12 Air Separation Unit (ASU) V-28

V.1.13 Plant Operating Criteria V-29
V.1.13.1 Duty V-29
V.1.13.2 Capacity Factor V-29
V.1.13.3 Hydrogen Production V-29
V.1.13.4 Coal Receiving and Preparation V-30
V.1.13.5 Limestone Receiving and Preparation V-30
V.1.13.6 Plant Mass Flow and Heat Balances V-30

V.1.14 Plant Design Life V-30

V.1.15 Gasifier Process Package Mass Balance V-30

V.2 Mechanical Design Criteria V-33

V.2.1 Gasifier Process Package Equipment V-33
V.2.1.1 Gasifier V-33
V.2.1.2 Wash Cooler V-34
V.2.1.3 Primary Heat Exchanger (Waste Heat Exchanger or Waste Heat Boiler) V-34
V.2.1.4 Syngas Coolers V-34
V.2.1.5 Gas Liquor Separation and Tar/Oil Re-injection System V-35

V.2.2 Syngas Cleanup System V-35
V.2.2.1 AGR System V-35
V.2.2.2 Sulfur Production (Claus) System V-41

V.2.3 Process Steam System V-42
V.2.3.1 Syngas-Fired Boiler Subsystem V-42
V.2.3.2 Steam Subsystem V-43

V.2.4 Pressure Swing Adsorption System (H_2 Production Option) V-44
V.2.4.1 Design Parameters V-44

V.2.5 Water-Gas Shift Reaction System (SNG production Option) V-44
V.2.5.1 Design Parameters V-44

V.2.6 Methanation System (SNG production option) V-44
V.2.6.1 Design Parameters V-45

V.2.7 Circulating Water and Make-Up Water Systems V-45
V.2.7.1 Design Parameters V-45

V.2.8 Waste Water Treatment System V-45
V.2.8.1 Design Parameters V-46

V.2.9 Material Handling Systems V-46
V.2.9.1 Coal and Limestone Receiving, Storage and Handling V-46
V.2.9.2 Slag Handling Systems V-48

V.2.10 Syngas Flare System V-48

V.2.11 Combustion Turbine (Combined Cycle Option) V-49
V.2.11.1 Design Parameters V-49

V.2.12 Heat Recovery Steam Generator (Combined-Cycle Option) V-49
V.2.12.1 Design Parameters V-50

V.3 Controls Systems V-51

V.4 Electrical System V-53
V.5 Civil, Structural, and Architectural Requirements V-55
V.6 Cost Estimating Criteria V-57
V.6.1 Capital Cost Estimating V-57
V.6.2 Operating and Maintenance (O&M) Cost Estimating V-58
V.7 Section V References V-59

This page intentionally left blank

SECTION V LIST OF EXHIBITS

Exhibit V.1-1 Site Conditions for Performance Analyses and System Designs V-2

Exhibit V.1-2 Proposed NSPS Emission Limitations For Stationary Combustion Turbines Constructed After 18Feb2005 (40CFR60, Subpart KKKK) V-4

Exhibit V.1-3 NSPS Emission Limitations For Industrial-Commercial-Institutional Steam Generating Units (> 100 MMBtu/hr) (40CFR60, Subpart Db) V-5

Exhibit V.1-4 Best Available Control Technology Determinations for Other Projects V-6

Exhibit V.1-5 Industrial Boiler NESHAPs V-7

Exhibit V.1-6 Turbines and Reciprocating Engine NESHAPs V-8

Exhibit V.1-7 Maximum Concentration for Toxicity Characteristic V-12

Exhibit V.1-8 PSD/NSR Significant Net Emissions Rate Increase V-13

Exhibit V.1-9 Abbreviated List of Typically Required Regulatory Approvals V-16

Exhibit V.1-10 Design Composition of As-Received Illinois #6 Coal V-18

Exhibit V.1-11 Design Trace Elements Analysis for Illinois #6 Coal V-19

Exhibit V.1-12 Expected Range of Illinois #6 Coal Characteristics V-20

Exhibit V.1-13 Expected Range of Trace Metal Concentrations for Illinois #6 Coal V-21

Exhibit V.1-14 Design Composition of As-Received Wyodak-Anderson PRB Coal V-22

Exhibit V.1-15 Design Trace Elements Analysis for Wyodak-Anderson PRB Coal V-23

Exhibit V.1-16 Expected Range of PRB Coal Characteristics V-24

Exhibit V.1-17 Expected Range of PRB Coal Trace Mineral Concentrations V-25

Exhibit V.1-18 Natural Gas Composition and Heating Value V-26

Exhibit V.1-19 Oxygen Specifications V-26

Exhibit V.1-20 Nitrogen Specifications V-27
Exhibit V.1-21 Limestone Design Composition V-27
Exhibit V.1-22 SNG Quality Specifications V-28
Exhibit V.1-23 Simplified Process Schematic.....V-31
Exhibit V.2-1 Advantages and Disadvantages of the Rectisol Process.....V-37
Exhibit V.2-2 Advantages and Disadvantages of the Selexol Process.....V-38
Exhibit V.2-3 Advantages and Disadvantages of the Ucarsol Process V-39
Exhibit V.2-4 Advantages and Disadvantages of the Flexol SE Process V-40
Exhibit V.6-1 Consumable/Product Price Assumptions.....V-58

TERMINOLOGY

ASU ..... Air separation unit
BEC ..... Bare erected cost
BGL ..... British Gas Lurgi
BTX ..... Benzene, Toluene, and Xylene
Btu ..... British thermal unit
ºC ..... Degrees Celsius
CC ..... Combined cycle
CO_2 ..... Carbon dioxide
CT, GT ..... Combustion turbine, synonym for gas turbine
DME ..... Dimethyl ether
DOE ..... Department of Energy (United States)
DRD ..... Design Requirements Document
EIA ..... Energy Information Administration
EPA ..... Environmental Protection Agency
°F ..... degrees Fahrenheit
FOF ..... Forced outage factor
FOR ..... Forced outage rate
fps ..... Feet per second
GE ..... General Electric
GT, CT ..... Gas turbine, synonym for combustion turbine
GWh ..... Gigawatt-hour
Hg ..... Mercury
HHV ..... Higher Heating Value
HRSG ..... Heat recovery steam generator
ID ..... Induced Draft (fan)
IDC ..... Interest during construction
IGCC ..... Integrated Gasification Combined Cycle
kW, kWe ..... Kilowatt electric
kWt ..... Kilowatt thermal
KWh ..... Kilowatt-hour
LHV ..... Lower heaving value
MDEA ..... Methyl diethanol amine
MIBK ..... Methyl Isobutyl Ketone
MW, MWe ..... Megawatt electrical
MW_t ..... Megawatt thermal
MWh ..... Megawatt-hour
NETL ..... DOE National Energy Technology Laboratory
NOx ..... Nitrous oxides
O_2 ..... Oxygen
O&M ..... Operating and Maintenance
P&W ..... Pratt & Whitney
Part. ..... Particulate emissions
POX ..... Partial Oxidation
psia ..... Pound/square inch (14.696 psi = 1 atm)
Q ..... Heat
QGESS ..... DOE/NETL Quality Guidelines for Energy System Studies
S ..... Sulfur content of fuel
scf ..... Standard cubic feet (based on 14.7psia/60°F)
SNCR ..... Selective non-catalytic reduction (for NOx control)
SNG ..... Substitute (Synthetic) Natural Gas
SO_2 ..... Sulfur dioxide
ST ..... Steam turbine
Syngas ..... Synthetic gas
T&D ..... Transmission and distribution (electrical)
t ..... Short ton (2,000 lbs)

TG ..... Turbo-generator, (turbine-generator)
t/h ..... Ton/hour
ton ..... short ton, (2000 lbs)
t/h,tph ..... Ton per hour
t/y,tpy ..... Ton per year
TPC ..... Total plant cost
US, U.S. ..... United States
USEPA ..... United States Environmental Protection Agency
USD, US$ ..... The United States Dollar
USDOE ..... United States Department of Energy
y, yr ..... Year

ACKNOWLEDGEMENTS

This work was performed under DOE/NETL Contract No. DE-AM26-04NT41817 with Research and Development Solutions (RDS), LLC. WorleyParsons Group Inc. performed the work under a subcontract agreement with RDS, Subcontract No. 41817M2943.

The NETL Project Manager for this activity was Jeffrey Hoffmann.

The authors acknowledge the contributions of Victor Shellhorse and Bill Jones of Allied Syngas Corporation who were of considerable assistance in describing the characteristics of the British Gas Lurgi gasifier.

This page intentionally left blank

V.1. GENERAL BASIS AND REQUIREMENTS

V.1.1 PROJECT OVERVIEW

A feasibility study was performed to evaluate the technical and economic viability of coal-derived syngas and substitute natural gas (SNG) re-fueling of U.S. industries. The study includes the development of Reference Plant Conceptual Designs for the following application scenarios:

Case 1 – A coal-derived syngas production plant, based on the BGL 1000 gasifier being marketed in North America by Allied Syngas Corporation, with a nominal gasifier capacity of approximately 1000 MMBtu/hr of synthesis gas.

Case 1A – Illinois #6 Coal as fuel, no hydrogen production

Case 1AH - Illinois #6 Coal as fuel, with hydrogen production

Case 1B – Powder River Basin (PRB) Coal as fuel, no hydrogen production

Case 1BH - PRB Coal as fuel, with hydrogen production

Case 2 – A coal-derived SNG production plant, based on the BGL 1000 gasifier, for distribution through natural gas pipelines.

Case 2A – Illinois #6 Coal as fuel

Case 2B – PRB Coal as fuel

Case 3 – A gas turbine re-fueling configuration for a nominal 80 to 150 MWe (combined cycle equivalent) based on the Case 1 syngas configuration

Case 3A – Illinois #6 Coal as fuel

Case 3B – PRB Coal as fuel

Case 4 – A gas turbine re-fueling configuration for a nominal 80 to 150 MWe (combined cycle equivalent) based on the Case 2 SNG configuration

Case 4A – Illinois #6 Coal as fuel

Case 4B – PRB Coal as fuel

V.1.2 PURPOSE OF THIS DESIGN REQUIREMENTS DOCUMENT

This Conceptual Design Requirements Document (DRD) contains the technical and functional requirements that are the basis for establishing the BGL gasifier-based conceptual designs for the Reference Plants. The data contained in this report are not at sufficient depth to be used for design or construction purposes.

V.1.3 SITE CRITERIA

This feasibility study is non-site specific. The site criteria for developing conceptual designs and cost estimates for this study are as follows:

V.1.4 WEATHER AND CLIMATE

Site conditions for performance analyses and system designs for all cases in this feasibility study are as shown in Exhibit V.1-1. The selection of these conditions is based on the recommendations in the Quality Guidelines for Energy System Studies for non-site specific studies.[1]

Exhibit V.1-1 Site Conditions for Performance Analyses and System Designs

Site Elevation Above Mean Sea Level.	0 ft.ASL			
Atmospheric Pressure	14.696 psia			
	Ambient Air Dry Bulb Temperature	**Ambient Air Wet Bulb Temperature**	**Dewpoint Temperature**	**Assumed Coincident River Water Temperature**
59°F Standard Day / 60% relative humidity	59.0 ºF	51.4ºF	45.2°F	55.7 ºF

V.1.5 EMISSIONS AND REGULATORY REQUIREMENTS

The evaluation of the emission requirements applicable to combustion units firing synthetic gas produced by coal gasification started with a review of New Source Performance Standards (NSPS). However, permitting a new plant with emissions controlled to NSPS requirements will probably not be acceptable to the EPA and/or individual states, who will require at least Best Available Control Technology (BACT) as specified in the Prevention of Significant Deterioration of Air Quality (PSD) regulations for areas meeting ambient air quality standards, or Lowest Achievable Emission Rate (LAER) technology as specified in the New Source Review (NSR) regulations for areas not meeting ambient air quality standards.

NEW SOURCE PERFORMANCE STANDARDS REGULATIONS

The following is paraphrased for clarification from the February 28, 2005 proposed revisions to 40CFR60, Subpart Da—Standards of Performance for Electric Utility Steam Generating Units. From the applicability section of this regulation, heat recovery steam generators that are associated with combined cycle gas turbines burning synthetic-coal gas are subject to this subpart. This subpart will continue to apply to all other electric utility combined cycle gas turbines that are capable of combusting more than 73 MW (250 MMBtu/hour) heat input of fossil fuel in the heat recovery steam generator. Further, if the combined cycle gas turbine burn synthetic-coal gas, emissions resulting from combustion of fuels are subject to this subpart. This is further clarified in 40CFR60, Subpart KKKK-Standards of Performance for Stationary Combustion Turbines regulations, in which the EPA states that stationary combustion turbines at integrated gasification combined cycle electric utility steam generating units that are subject to Subpart Da are exempt from Subpart KKKK. Therefore, they consider it appropriate to cover combustion turbines fueled by gasified coal under the Utility NSPS (Subpart Da). Combustion turbines fueled by gasified coal and not meeting the heat input requirements of the Utility NSPS, i.e., more than 250 MMBtu/hr, would be covered by the stationary combustion turbine rule (Subpart KKKK) under the “other fuel” category.

Under the Definitions section of Subpart Da, Coal means all solid fuels ... coal refuse, and petroleum coke. Synthetic fuels derived from coal for the purpose of creating useful heat, including but not limited to solvent-refined coal, gasified coal, coal-oil mixtures, and

coal-water mixtures are included in this definition for the purposes of Subpart Da.

Exhibit V.1-2 lists the NSPS emission limits applicable to stationary combustion turbines firing gasified coal.

Exhibit V.1-2 Proposed NSPS Emission Limitations For Stationary Combustion Turbines Constructed After 18Feb2005 (40CFR60, Subpart KKKK)

POLLUTANT	LIMITATION
Nitrogen Oxides	For Thermal Input ≤ 50 MMBtu/hr (HHV): 96 ppmvd @ 15% O2 or 5.5 lb/MWh
	For 50 MMBtu/hr < Input ≤ 850 MMBtu/hr: 74 ppmvd @ 15% O2 or 3.6 lb/MWh
	For Thermal Input > 850 MMBtu/hr (HHV): 42 ppmvd @ 15% O2 or 1.3 lb/MWh
Sulfur Dioxide	0.90 lb/MWh or not burn any fuel that contains total potential sulfur emissions in excess of 0.060 lb/MMBtu of heat input

Regarding the burning of gasified coal in industrial boilers, 49CFR60, Subpart Db—Standards of Performance for Industrial-Commercial-Institutional Steam Generating Units includes the following definition, Coal means all solid fuels … coal refuse, and petroleum coke. Coal-derived synthetic fuels, including but not limited to solvent refined coal, gasified coal, coal-oil mixtures, and coal-water mixtures, are also included in this definition for the purposes of Subpart Db. Exhibit V.1-3 lists the NSPS emission limits applicable to large (>100 MMBtu/hr) industrial-commercial-institutional steam generating units firing gasified coal. The emissions limits for small steam generating units are the same except with respect to NOx for which there is no limit (40CFR60, Subpart Dc).

Exhibit V.1-3 NSPS Emission Limitations For Industrial-Commercial-Institutional Steam Generating Units (> 100 MMBtu/hr) (40CFR60, Subpart Db)

Pollutant	Emission Limit
Particulate Matter	0.030 lb/MMBtu of heat input
Opacity	20%, except for one 6-minute period/hour of not more than 27%
Sulfur Dioxide	0.20 lb/MMBtu or 92% reduction and 1.2 lb/MMBtu
Nitrogen Oxides	0.10 (lhrr), or 0.20 lb/MMBtu (hhrr), or 2.1 lb/MWh of gross energy output

lhrr – low heat release rate (≤ 70,000 Btu/hr-ft3)
hhrr – high heat release rate (> 70,000 Btu/hr-ft3)

PREVENTION OF SIGNIFICANT DETERIORATION (PSD) REGULATIONS

The PSD regulations are applicable to new major stationary sources being located in areas meeting ambient air quality standards. The PSD requirements are developed around the concept of installing the Best Available Control Technology (BACT). BACT is the maximum degree of emission reduction determined on a case-by-case basis for new sources in clean air areas with cost, energy, and technical feasibility taken into account, but in no case is BACT less stringent than NSPS. Exhibit V.1-4 presents a range of BACT determinations made nationwide for the coal boilers, circulating fluidized bed (CFB) boilers, IGCC, and combustion turbines and combustion turbines firing gasified coal (a.k.a combustion turbine exhaust from IGCC).

National Emission Standards for Hazardous Air Pollutants (NESHAP) regulates specific categories of stationary sources that emit (or have the potential to emit) one or more hazardous air pollutants. Exhibit V.1-5 and Exhibit V.1-6 present NESHAP emission limits for new and existing solid, liquids and gaseous fuel fired combustion units, and combustion turbines and reciprocating engines, respectively. Note that while particulate matter (PM) and carbon monoxide (CO) are not listed hazardous air pollutants (HAP) in Section 112 of the Clean Air Act they are used by the EPA as surrogates for non-mercury metallic and organic HAP emissions, respectively.

Exhibit V.1-4 Best Available Control Technology Determinations for Other Projects

Process	Pollutants	Emissions Limitation	Type of Technology
Coal - PC Boiler	PM/PM-10 (Filterable)	0.012 – 0.015 lb/10^6 Btu	Fabric Filter or ESP
	PM-10 (Filterable + Condensable)	0.018 – 0.038 lb/10^6 Btu	Fabric Filter or ESP
	Sulfur Dioxide	0.06 – 0.2 lb/10^6 Btu	Low-Sulfur Fuel, FGD
	Nitrogen Oxides	0.07 – 0.15 lb/10^6 Btu	LNB, SCR
	Carbon Monoxide	0.10 – 0.15 lb/10^6 Btu	Combustion Controls
Coal - CFB	PM/PM-10 (Filterable)	0.011 – 0.015 lb/10^6 Btu	Fabric Filter
	PM-10 (Filterable + Condensable)	0.011 – 0.028 lb/10^6 Btu	Fabric Filter
	Sulfur Dioxide	0.13 – 0.32 lb/10^6 Btu	CFB, Polishing Scrubber
	Nitrogen Oxides	0.07 – 0.15 lb/10^6 Btu	CFB, SNCR
	Carbon Monoxide	0.10 – 0.27 lb/10^6 Btu	Combustion Controls
Coal - IGCC	PM/PM-10	0.011 – 0.013 lb/10^6 Btu	Combustion Controls
	Sulfur Dioxide	0.032 – 0.17 lb/10^6 Btu	Sulfur Recovery Unit, Acid Gas Absorption
	Nitrogen Oxides	15 ppmvd	LNB, Diluent/Steam Injection
	Carbon Monoxide	15 – 25 ppmvd	Combustion Controls
Combustion Turbine (NG)	Nitrogen Oxides	2.0 – 9 ppmvd @ 15% O_2	LNB, Diluent/Steam Injection, SCR
	Carbon Monoxide	2 – 10 ppmvd @ 15% O_2	Combustion Controls, Oxidation Catalyst
Combustion Turbine (SynGas)	PM/PM-10	0.011 – 0.013 lb/10^6 Btu	Combustion Controls
	Sulfur Dioxide	0.032 – 0.17 lb/10^6 Btu	Sulfur Recovery Unit, Acid Gas Absorption
	Nitrogen Oxides	15 – 25 ppmvd @ 15% O_2	LNB, Diluent/Steam Injection
	Carbon Monoxide	15 – 25 ppmvd @ 15% O_2	Combustion Controls

Exhibit V.1-5 Industrial Boiler NESHAPs

Pollutant	Emission Limit	Governing Regulation
PM (TSM)	0.025 (0.0003) lb/MMBtu	New ICI Boiler, solid fuel, large or small unit
PM (TSM)	0.07 (0.001) lb/MMBtu	Existing ICI Boiler, solid fuel, large unit
PM	0.03 lb/MMBtu	New ICI Boiler, liquid fuel, large or small unit
HCl	0.02 lb/MMBtu	New ICI Boiler, solid fuel, large or small unit
HCl	0.09 lb/MMBtu	Existing ICI Boiler, solid fuel, large unit
HCl	0.0005 lb/MMBtu	New ICI Boiler, liquid fuel, large unit
HCl	0.0009 lb/MMBtu	New ICI Boiler, liquid fuel, small unit
Hg	3 lb/TBtu	New ICI Boiler, solid fuel, large or small unit
Hg	9 lb/TBtu	Existing ICI Boiler, solid fuel, large unit
CO	400 ppm*	New ICI Boiler, solid fuel, large unit
CO	400 ppm*	New ICI Boiler, liquid fuel, large unit
CO	400 ppm*	New ICI Boiler, gaseous fuel, large unit

[Health-based compliance alternatives for HCl and TSM emission limit. Look-up table taking into account chimney height and distance to property boundary. Source still subject to operating and monitoring requirements.]

Large unit - >10 MMBtu/hr
Small unit - ≤ 10 MMBtu/hr
Carbon monoxide (CO) is measured in parts per million (ppm) by volume on a dry basis corrected to 3 percent oxygen; averaging time is 30-day rolling average
Total Selected Metals (TSM) is the combination of the following metallic HAP: arsenic, beryllium, cadmium, chromium, lead, manganese, nickel, and selenium.
TBtu – trillion Btus (million million Btus)

Source: 40CFR63, Subpart DDDDD, Industrial, Commercial, and Institutional (ICI) Boilers and Process Heaters

Exhibit V.1-6 Turbines and Reciprocating Engine NESHAPs

Pollutant	Emission Limit	Governing Regulation
Formaldehyde	91 ppbvd, at 15% oxygen	New Lean Premix, gas or oil-fired CT
Formaldehyde	91 ppbvd, at 15% oxygen	New Diffused Flame, gas or oil-fired CT
Formaldehyde	76% reduction, or 350 ppbvd, at 15% oxygen	Any Spark Ignition, 4SRB RICE >500 bHP
Carbon Monoxide, or	58% reduction, or	New 2SLB RICE >500 bHP
Formaldehyde	12 ppmvd, at 15% oxygen	
Carbon Monoxide, or	93% reduction, or	New 4SLB RICE >500 bHP
Formaldehyde	14 ppmvd, at 15% oxygen	
Carbon Monoxide, or	70% reduction, or	New 4SLB RICE >500 bHP
Formaldehyde	580 ppbvd, at 15% oxygen	

ppmvd – parts per million by volume, on a dry basis
ppbvd – parts per billion by volume, on a dry basis
bHP – Brake Horsepower
4SRB – 4-stroke, rich burn
2SLB – 2-stroke, lean burn
4SLB – 4-stroke, lean burn
CI – Compression Ignition
40CFR63, Subpart YYYY, Stationary Combustion Turbines (CT)
40CFR63, Subpart ZZZZ, Stationary Reciprocating Internal Combustion Engines (RICE)

V.1.5.1 NO_x Emissions Design Criteria

For generic site evaluations, NOx emissions will be controlled primarily by combustion controls in components using the syngas (or SNG) as fuel. NOx emissions will not exceed 25 ppmvd @ 15% O2 when syngas is used to fire a combustion turbine. In non-attainment areas, select catalytic reduction (SCR) will be included to reduce NOx emissions. Typically, an SCR efficiency of 90% can be achieved, thus reducing the NOx emissions from 25 ppmvd to about 2.5 ppmvd.

V.1.5.2 SO_2 Emissions Design Criteria

SO_2 emissions will be controlled by removing sulfur from the syngas in the syngas cleanup system. For the syngas production reference plant where gas is sold directly to an industrial customer, sulfur in the syngas will be controlled to pipeline natural gas levels, as defined in Section V.1.10. SO_2 emissions will not exceed 0.17 lb/MMBtu when syngas is used to fire a combustion turbine. With the Rectisol syngas cleanup system as the Reference Plant AGR, it is anticipated that SO_2

emissions will be no greater than those expected from natural gas-fired combustion turbines.

V.1.5.3 Particulate Emissions Design Criteria

Particulate emissions will be controlled by particulate removal from the syngas in the water wash at the discharge of the gasifier. PM/PM-10 emissions will not exceed 0.013 lb/MMBtu when syngas is used to fire a combustion turbine.

V.1.5.4 Mercury Design Criteria

Ninety percent of the mercury in the coal will be removed in the process.

EPRI performed extensive testing of all phases of operation of the BGL gasifier during the late 80's and early 90's. These tests were performed on the 500 tons per day Westfield unit, and the results are all well documented. In particular, two of these reports[2,3] in 1991 were dedicated to the analysis, testing, and treatment of by product wastes, namely waste water and slags produced from the consumption of Pittsburgh #8 and Illinois #6 coals.

In 1991, EPRI could not perform a complete mass balance on mercury removal, as they did not have a reliable head sample of the mercury that was contained in the input coal. The limit of detection at that time was 0.56 ppm wt/wt for the input coal. Subsequent to these tests, detection limits have improved to 0.01 ppm, and the USGS has sampled and recorded mercury in 66 samples of Pittsburgh #8 coal down to this level. Except for 1 sample, there was little variation in the mercury levels, with all samples coming in under 30 ppm, with a weighted average of 0.13 ppm wt/wt mercury for all samples.

EPRI was able to analyze mercury in the wastewater accurately to the ppm level, but their limit of detection of mercury in the syngas was 0.002 ppb. None of the tests documented showed mercury in the syngas output above the detection limit of .002 ppb. Mercury in the wastewater was measured at 0.49 ppm. Setting the output mercury in the syngas at the highest level (at the detection limit of 0.002 ppb), and performing a balance based on the average mercury in coal input of 0.13 ppm, a mercury removal rate of approximately 99% is demonstrated. In performing this balance; 100% +/- of the input mercury is accounted for in the wastewater. This result was

documented over a range of mercury in the input coal, and fits the accountability balance well.

Additional balances were run to determine the degree of sensitivity (detection limit) and level of mercury in the syngas analysis that would be needed to produce a result of 90% mercury removal. A mercury level in the syngas level of 0.3 ppb would have produced a 90% mercury removal rate, but 0.3 ppb is 150 times higher than the advertised 0.002 ppb limit of detection, and it would appear that under this condition they would have recorded at least some mercury in the syngas.

Based on the above analysis, it is anticipated that significantly greater than 90% of the mercury in the coal will be removed in the water quench and collect in the gas liquor quench. Therefore, no additional mercury control technology for removing mercury from the syngas is anticipated. If required, however, a carbon bed could be added prior to the AGR system.

V.1.5.5 Water Design Criteria

Water discharged from the plant will meet federal, state, and local requirements. Water use, thermal discharge, and liquid waste discharges for the plant will meet federal, state, and local regulations for magnitude and contaminant limits and water quality standards. Effluent guidelines for the Steam Electric Power Generating Point Source Category (40 CFR 423), includes the following requirements for new sources:

- All Discharges, except once-through cooling water - pH within the range of 6.0 - 9.0
- Polychlorinated Biphenyl Compounds - No Discharge
- Low Volume Waste Sources[a]
  - total suspended solids (TSS): 100.0 milligrams per liter (mg/l), daily maximum; 30.0 mg/l, 30-day average
  - Oil and Grease: 20.0 mg/l, daily maximum; 15.0 mg/l, 30-day average
- Chemical Metal Cleaning Waste[b]

---

[a] Includes wastewater from wet scrubber air pollution control systems, ion exchange water treatment system, water treatment evaporator blowdown, laboratory and sampling streams, boiler blowdown, floor drains, cooling tower basin cleaning wastes, and recirculating house service water systems

- TSS: 100,0 mg/l, daily maximum; 30.0 mg/l, 30-day average
- Oil and Grease: 20.0 mg/l, daily maximum; 15.0 mg/l, 30-day average
- Copper, total: 1.0 mg/l, daily maximum; 1.0 mg/l, 30-day average
- Iron, total: 1.0 mg/l, daily maximum; 1.0 mg/l, 30-day average

♦ Bottom Ash Transport Water[c]

- TSS: 100.0 mg/l, daily maximum; 30.0 mg/l, 30-day average
- Oil and Grease: 20.0 mg/l, daily maximum; 15.0 mg/l, 30-day average

♦ Fly Ash Transport Water[d] - No Discharge Allowed

♦ Once Through Cooling Water for Plants 25 MW or Larger

- Total Residual Chlorine (TRC): 0.2 mg/l, maximum concentration, not more than two hours per day

♦ Once Through Cooling Water for Plants of Less than 25 MW

- Free Available Chlorine (FAC): 0.5 mg/l, maximum concentration; 0.2 mg/l, average concentration, not more than two hours per day

♦ Cooling Tower Blowdown

- FAC: 0.5 mg/l, maximum concentration; 0.2 mg/l, average concentration, not more than two hours per day
- 126 priority pollutants (toxics) contained in chemicals added for cooling tower maintenance: No detectable amount may be discharged[e], except -
  - Chromium, total: 0.2 mg/l daily maximum; 0.2 mg/l, 30-day average
  - Zinc, total: 1.0 mg/l, daily maximum; 1.0 mg/l, 30-day average

♦ Coal Pile Runoff

- TSS: not to exceed 50 mg/l; designed, constructed, and operated to treat runoff from a 10 year, 24 hour rainfall event.

---

[b] Includes boiler tube cleaning, boiler fireside cleaning, and air preheater cleaning.

[c] Includes economizer ash if collected with bottom ash.

[d] Includes economizer ash if collected with fly ash

[e] In lieu of monitoring and analyses, compliance may be determined by engineering calculations that demonstrate the 126 priority pollutants are not detectable

V.1.5.6 Waste Criteria

With the enactment of the Resource Conservation and Recovery Act (RCRA) the loop was closed on the control of environmental pollutants. Up until then, there had been relatively few regulations dealing directly with the disposal of solid wastes. Now all wastes, whether discharged to air, water, or land are covered by some form of regulatory program. The following section briefly discusses the regulatory requirements and disposal requirements.

High volume, combustion wastes, such as fly ash, bottom ash, slag waste, flue gas emission control waste (e.g., scrubber sludge), gasifier ash from coal gasification, and process wastewater from coal gasification are included in RCRA's definition of solid wastes, but excluded from being classified as a hazardous waste (40CFR261.4).

Many states require that Toxicity Characteristic Leaching Procedure (TCLP) analysis from a representative sample of each waste stream be conducted to demonstrate that the waste does not possess toxic characteristics. A minimum analysis and regulatory levels not to exceed are presented in Exhibit V.1-7

Exhibit V.1-7 Maximum Concentration for Toxicity Characteristic

EPA HW No.\1\	Contaminant	CAS No.\2\	Regulatory Level (mg/L)
D004	Arsenic	7440-38-2	5.0
D005	Barium	7440-39-3	100.0
D006	Cadmium	7440-43-9	1.0
D007	Chromium	7440-47-3	5.0
D008	Lead	7439-92-1	5.0
D009	Mercury	7439-97-6	0.2
D010	Selenium	7782-49-2	1.0
D011	Silver	7440-22-4	5.0

\1\Hazardous waste number.
\2\Chemical abstracts service number

V.1.5.7 Permitting, Licensing, and Regulatory Approval Requirements for Fuel Switching

This section provides information regarding the permit requirements applicable to existing sources that switch to syngas.

Industrial plants in the U.S. are not currently permitted to burn syngas fuel from the BGL gasifier, and, therefore, will have to go through some type of permitting process. If the re-fueling will not

result in significant emissions increases, as defined in 40CFR52.21, then the re-permitting process will be relatively simple, taking on the order of three to six months. The definition of significant increase for specific emissions is shown in Exhibit V.1-8. If the re-fueling will result in significant emissions increases, then the combustion unit will be subject to New Source Review (NSR), including Prevention of Significant Deterioration (PSD) and non-attainment NSR. The re-permitting process will then be more complicated, and will likely take nine to eighteen months, at a significantly higher cost. The types of activities that will probably be required if significant increases in emissions are expected include:

- Collection of on-site meteorological data
- Ambient air quality monitoring
- Air quality dispersion modeling
- Installation of BACT (if in an attainment area) or LAER (if in a non-attainment area) technology
- Purchase of emissions reductions credits if in a non-attainment area

Exhibit V.1-8 PSD/NSR Significant Net Emissions Rate Increase

POLLUTANT	EMISSION RATE (TONS PER YEAR)
Carbon Monoxide	100
Nitrogen Oxides	40
Sulfur Dioxide	40
Particulate Matter (PM/PM10/PM2.5)	25/15/10
Ozone (VOC)	40 (of VOCs)
Lead	0.6
Fluorides	3
Sulfuric Acid Mist	7
Hydrogen Sulfide (H_2S)	10
Total Reduced Sulfur Compounds (incl. H_2S)	10

New Source Performance Standards (NSPS) has a whole section devoted to what a modification is (40CFR60.14). There are also similar requirements in the Prevention of Significant Deterioration (PSD) regulations (40CFR51.166). The following portions of the regulations dealing with use of an alternative fuel are taken out of context from these regulations. However, in general NSPS would

not be applicable, if hourly emissions do not increase; nor PSD requirements, if annual emissions do not increase significantly.

From 40CFR60.14(e), "The following shall not, by themselves, be considered modifications under this part: … (4) Use of an alternative fuel or raw material if the existing facility was designed to accommodate that alternative use. A facility shall be considered to be designed to accommodate an alternative fuel or raw material if that use could be accomplished under the facility's construction specifications as amended prior to the change..." So if a new burner has to be added to burn the syngas and hourly emissions increase, NSPS would be applicable to the source. Regardless, a revision to the permit will have to be made to burn an alternative fuel anyway.

The PSD regulation has similar definitions/requirements contained in 40CFR51.166(b)(2)(i). "*Major modification* means any physical change in or change in the method of operation of a major stationary source that would result in a significant emissions increase … of a regulated NSR pollutant … ; and a significant net emissions increase of that pollutant from the major stationary source." Further, (iii) "A physical change or change in the method of operation shall not include: … (*e*) Use of an alternative fuel or raw material by a stationary source which: (*1*) … unless such change would be prohibited under any federally enforceable permit condition; or (*2*) The source is approved to use under any permit issued under…" PSD regulations.

The following presents a summary of the reconstruction regulations (See 40 CFR 60.15 for actual wording, the following is paraphrased): "An existing facility, upon reconstruction, becomes an affected facility, irrespective of any change in emission rate. "Reconstruction" means the replacement of components of an existing facility to such an extent that: (1) The fixed capital cost of the new components exceeds 50 percent of the fixed capital cost that would be required to construct a comparable entirely new facility, and (2) It is technologically and economically feasible to meet the applicable standards set forth in this part. "Fixed capital cost" means the capital needed to provide all the depreciable components."

The modification and reconstruction provisions of NSPS are independent. The former provisions are intended to apply in circumstances where physical or operational changes which increase emissions make NSPS coverage appropriate at levels well below 50 percent of the capital cost of a replacement unit. Conversely, the reconstruction provisions are aimed at changes to

an existing unit irrespective of associated emissions increases, but trigger NSPS requirements only if the higher 50 percent level is reached.

If there is doubt about applicability, the Administrator will make a determination of whether action taken or intended to be taken by such owner or operator constitutes construction (including reconstruction) or modification or the commencement thereof within the meaning of this part

V.1.5.8 Permitting, Licensing, and Regulatory Approval Requirements for New Gasification Projects

The permitting, licensing, and regulatory approval requirements for a new gasification project will be site specific; however, an abbreviated list of typically required approvals are shown in Exhibit V.1-9.

Exhibit V.1-9 Abbreviated List of Typically Required Regulatory Approvals

Approval	Agency	Activity
Permit to Construct Air Contaminant Sources	EPA	Construction of air contaminant sources or indirect sources (flares, turbines, material handling systems, control equipment)
Certificate to Operate for Sources of Air Contamination	EPA	Operation of air contaminant sources or indirect sources
Wastewater Treatment Plant Construction Permit	EPA	Any discharge of sewage, industrial wastes, storm water, or other wastes to surface water or groundwater
Water Supply Permit	EPA	Construction of wastewater treatment facility, including: cooling towers, coal pile runoff ponds, sewage treatment facilities
Solid Waste Construction Permit	EPA	Water supply and water allocation
Solid Waste Operating Permit	EPA	Construction of solid waste management facility, including storage, transfer, processing, recovering, reclaiming, and disposal
Corps of Engineers (COE) Permit	COE	Any activity in or affecting navigable water of the states including any marshes, estuaries, and wetlands adjacent to navigable water (intake/discharge structures, pipelines, transmission lines)
401 Certification	EPA	Required for any federal permit indicating that approval will not cause a violation of state water quality standards
Construction in Flood Hazard Area Permit	EPA/Local	Construction within 100-year floodplain
State Environmental Quality Review	EPA	Reviw of environmental impacts associated with the Project (threatened, endangered, or protected species; historic buildings, natural resources)
Building Permit, Zoning Approval	EPA	Permit required for occupancy of a structure including: eliectrical, plumbing, HVAC, fire protection, life safety, also for boilers, pressure vessels, eleveators, land use, zoning

V.1.6 FUELS

V.1.6.1 Illinois # 6 Coal

V.1.6.1.1 Design Illinois #6 Coal Composition

The design Eastern, high-volatile bituminous coal is Illinois #6 with the characteristics shown Exhibit V.1-10 and Exhibit V.1-11. The coal analyses are based on data received from Allied Syngas Corporation with respect to the analyses of coal used for BGL gasifier tests under an EPRI program, and other test programs, data in the Penn State Coal Sample Bank and Data Base, and data from analyses performed by the USGS.

The Proximate Analysis, Ultimate Analysis, Heating Value, mineral ash analysis, and ash fusion temperatures are based on data on a washed Illinois #6 coal from the AMAX Coal Company Delta mine used in BGL gasifier tests upon which the gasifier performance information provided by Allied Syngas Corporation and Envirotherm GmbH for this project were based. The sulfur analysis was based on data for Illinois #6 Herrin Seam coal in the Penn State Coal Sample Bank and Data Base.[4] The trace element analysis is based on chemical analyses of the Argonne Premium Coal Samples by the USGS.[5,6] The design coal characteristics are within the range of those identified for Illinois #6 coal samples in the Market Based Advanced Coal Power Systems Comparison Study being performed for the U.S. DOE by WorleyParsons.[7] They are similar to the characteristics of the Market Based Advanced Coal Power Systems Comparison Study design basis at the time that this study was initiated and the Illinois #6 coal characteristics provided in The U.S. DOE Quality Guidelines for Energy System Studies.[1]

V.1.6.1.2 Range of Illinois #6 Coal Characteristics Expected

The range of coal characteristics, shown in Exhibit V.1-12 and Exhibit V.1-13, were defined based on the minimum and maximum values for each characteristic obtained when querying the Penn State Coal Sample Bank and Database[4] for coal properties for Illinois #6, Herrin Seam coal samples and the USGS Coal Quality Database[8] for Illinois, bituminous coal samples.

V.1.6.1.3 Illinois #6 As-Received Size Distribution

The Illinois #6 coal will be purchased screened to the requirements of the BGL gasifier. The size requirement as specified by Envirotherm is ¼" x 2".[9] with maximum fines (less than ¼") limited to a range from 25% to 40%.

Exhibit V.1-10 Design Composition of As-Received Illinois #6 Coal

Proximate Analysis (As Recd), wt %	
Moisture	6.97
Ash	11.76
Volatile	32.49
Fixed Carbon	48.78
	100.00

HHV, Btu/lb (As Recd)	11,714
LHV, Btu/lb (As Recd)	11,313

Sulfur Analysis (Dry), wt %	
Pyritic	1.74
Sulfate	0.32
Organic	1.32

Mineral Ash Analysis, wt %	
SiO_2	46.6
Al_2O_3	18.6
Fe_2O_3	19.0
CaO	6.7
MgO	1.0
Na_2O	0.4
SO_3	4.3
TiO_2	0.9
K_2O	2.2
P_2O_5	0.1
Total	100.0

Ultimate Analysis (As-Received), wt %	
Carbon	64.98
Hydrogen	4.36
Nitrogen	1.28
Chlorine	0.09
Oxygen	7.41
Ash	11.76
Sulfur	3.15
Moisture	6.97
	100.00

Ash Fusion – Oxidizing, ºF	
Ash Fusion - Softening	2,309
Ash Fusion - Hemispheric	2,354
Ash Fusion - Fluid	2,417

Ash Fusion – Reducing, ºF	
Ash Fusion - Softening	1,994
Ash Fusion - Hemispheric	2,066
Ash Fusion - Fluid	2,156

Notes:

Proximate, Ultimate, and mineral analyses, HHV, and ash fusion data are based on data provided by Allied Syngas Corporation on coal used in BGL tests.

Sulfur analysis based on data for Illinois #6 Herrin seam coal in Penn State Coal Sample Bank and Data Base[4]

Exhibit V.1-11 Design Trace Elements Analysis for Illinois #6 Coal

Illinois #6 Coal Trace Mineral Analysis, µg/g in Coal	
Arsenic	4.2
Boron	160
Barium	83
Cadmium	0.7
Chromium	36
Copper	10.1
Lead	7
Mercury	.09
Nickel	19
Selenium	4.2
Vanadium	35
Zinc	200
Beryllium	0.76
Fluorine	90

Note: Source for all elements except Mercury and Fluorine from Reference 5.
Source for Mercury from average in Reference 6.
Fluorine assumed to be 10% of chlorine concentration

Exhibit V.1-12 Expected Range of Illinois #6 Coal Characteristics

Proximate Analysis (As Recd), wt %	
Moisture	3.66 – 11.6
Ash	7.3 – 14.5
Volatile	32.4 – 37.2
Fixed Carbon	42.4 – 51.8

HHV, Btu/lb (As Recd)	10,947 – 12,011

Sulfur Analysis (Dry), wt %	
Pyritic	.8 – 2.64
Sulfate	0.10 – 0.59
Organic	1.04 – 2.71

Mineral Ash Analysis, wt %	
SiO_2	27 - 46
Al_2O_3	13 - 22
Fe_2O_3	11 - 29
CaO	3.7 - 13
MgO	0.5 – 1.1
Na_2O	0.7 – 1.7
SO_3	2.3 - 10
TiO_2	0.615 – 1.2
K_2O	1.1 – 2.0
P_2O_5	0.06 – .71

Ultimate Analysis (As-Received), wt %	
Carbon	62.0 – 78.1
Hydrogen	4.6 – 5.5
Nitrogen	.91 – 1.53
Chlorine	0.01 – 0.2
Oxygen	9.2 – 18.0
Ash	7.3 – 14.5
Sulfur	2.0 – 4.9
Moisture	3.66 – 11.6

Ash Fusion – Oxidizing, ºF	
Ash Fusion - Softening	2,309
Ash Fusion - Hemispheric	2,354
Ash Fusion - Fluid	2,417

Ash Fusion – Reducing, ºF	
Ash Fusion - Softening	1,988 - 2,173
Ash Fusion - Hemispheric	2,066
Ash Fusion - Fluid	2,024 – 2,256

Notes:

Ranges bases on minimum and maximum of data from Penn State Coal Sample Bank for Illinois #6(Herrin) coal and USGS Coal Quality Database for bituminous Illinois coal.[4,8]

Exhibit V.1-13 Expected Range of Trace Metal Concentrations for Illinois #6 Coal

Illinois #6 Coal Trace Mineral Concentration Range, µg/g in Coal	
Arsenic	1.5 – 21
Boron	56 - 200
Barium	19 - 110
Cadmium	.18 - 4
Chromium	8.8 - 26
Copper	7.2 - 21
Lead	2.9 - 15
Mercury	0.04 – 0.12
Nickel	6.2 - 31
Selenium	1.2 – 4.7
Vanadium	12 - 35
Zinc	15 - 420
Beryllium	1.1 – 7.3
Fluorine	47 - 140
Note: Based on minimum and maximum concentrations of bituminous Illinois coal samples in USGS Coal Quality Database[8]	

V.1.6.2 Powder River Basin Coal

V.1.6.2.1 Design PRB Coal Composition

The design sub-bituminous coal is Wyodak PRB with the characteristics shown in Exhibit V.1-14 and Exhibit V.1-15. All the coal analyses except for the trace element analysis are based on data provided by Allied Syngas Corporation with respect to Wyodak coal supplied by Sun Oil from the Belle Ayr Mine, Gillette, Wyoming for use in BGL gasifier tests and used as a basis for the gasifier performance information provided for this project. The trace element analysis is based on chemical analyses of the Argonne Premium Coal Samples by the USGS.[5,6] The design coal characteristics are within the range of those identified for PRB coal samples in the Market Based Advanced Coal Power Systems Comparison Study being performed for the U.S. DOE by WorleyParsons.[7] They are similar to the characteristics of the Market Based Advanced Coal Power Systems Comparison Study design basis at the time that this study was initiated and the PRB coal characteristics provided in The U.S. DOE Quality Guidelines for Energy System Studies.[1]

Exhibit V.1-14 Design Composition of As-Received Wyodak-Anderson PRB Coal

Proximate Analysis (As Recd), wt %	
Moisture	25.2
Ash	5.84
Volatile	33.93
Fixed Carbon	35.03
Total	100.00

HHV, Btu/lb (As Recd)	8,875
LHV, Btu/lb (As Recd)	8,593

Sulfur Analysis (Dry), wt %	
Pyritic	0.41
Sulfate	0.02
Organic	0.31

Mineral Ash Analysis, wt %	
SiO_2	30.7
Al_2O_3	20.0
Fe_2O_3	4.3
CaO	24.4
MgO	2.3
Na_2O	0.8
SO_3	14.3
TiO_2	1.7
K_2O	0.5
P_2O_5	0.2
BaO	0.8
Total	100.0

Ultimate Analysis (As-Received), wt %	
Carbon	53.42
Hydrogen	3.07
Nitrogen	0.69
Chlorine	0.02
Oxygen	11.45
Ash	5.84
Sulfur	0.31
Moisture	25.2
Total	100.00

Ash Fusion – Oxidizing, ºF	
Ash Fusion - Deformation	2,201
Ash Fusion - Hemispheric	2,210
Ash Fusion - Fluid	2,219

Ash Fusion – Reducing, ºF	
Ash Fusion - Deformation	2,156
Ash Fusion - Hemispheric	2,165
Ash Fusion - Fluid	2,228

Note: Note: Analyses based on data provided by Allied Syngas Corporation for a coal supplied by Sun Oil from the Belle Ayr Mine, Gillette, Wyoming, for BGL gasifier tests

Exhibit V.1-15 Design Trace Elements Analysis for Wyodak-Anderson PRB Coal

PRB Coal Trace Mineral Analysis, µg/g in Coal	
Arsenic	3.0
Boron	96
Barium	300
Cadmium	0.11
Chromium	6.5
Copper	13.0
Lead	2.3
Mercury	.12
Nickel	4.7
Selenium	2.0
Vanadium	14
Fluorine	20
Beryllium	0.25
Zinc	11.0
Note: Source for all elements except Mercury and Fluorine from Reference 5. Source for Mercury from average in Reference 6. Fluorine assumed to be 10% of chlorine concentration	

V.1.6.2.2 Range of PRB Coal Characteristics Expected

The range of coal characteristics, shown in Exhibit V.1-16 and Exhibit V.1-13, were defined based on the minimum and maximum values for each characteristic obtained when querying the Penn State Coal Sample Bank and Database[4] for coal properties for Wyodak PRB coal samples and the USGS Coal Quality Database[8] for Wyoming, PRB sub-bituminous coal samples.

Exhibit V.1-16 Expected Range of PRB Coal Characteristics

Proximate Analysis (As Recd), wt %	
Moisture	19.1 – 34.7
Ash	2.3 – 17.0
Volatile	26.4 – 36.4
Fixed Carbon	26.3 – 43.5

HHV, Btu/lb (As Recd)	6,614 – 9,900
LHV, Btu/lb (As Recd)	

Sulfur Analysis (Dry), wt %	
Pyritic	0.01 – 1.4
Sulfate	0.01 – 0.27
Organic	0.12 – 1.2

Mineral Ash Analysis, wt %	
SiO_2	12 - 51
Al_2O_3	6.7 - 22
Fe_2O_3	2.7 - 20
CaO	5.8 - 29
MgO	1.8 – 7.7
Na_2O	0.23 – 4.2
SO_3	4.2 - 30
TiO_2	0.38 – 1.4
K_2O	0.12 – 1.4
P_2O_5	0.1 – 1.9

Ultimate Analysis (As-Received), wt %	
Carbon	38.2 – 58.6
Hydrogen	5.4 – 6.9
Nitrogen	0.57 – 1.1
Chlorine	0.02
Oxygen	
Ash	2.3 – 17.0
Sulfur	0.12 – 1.8
Moisture	19.1 – 34.7

Ash Fusion – Oxidizing, ºF	
Ash Fusion - Deformation	2,201
Ash Fusion - Hemispheric	2,210
Ash Fusion - Fluid	2,219

Ash Fusion – Reducing, ºF	
Ash Fusion - Deformation	2,000 – 2,410
Ash Fusion - Hemispheric	2,070 – 2,460
Ash Fusion - Fluid	2,120 – 2,500

Note:

Ranges bases on minimum and maximum of data from Penn State Coal Sample Bank for Wyodak coal and USGS Coal Quality Database for Wyoming PRB sub-bituminous coal.[4,8]

Exhibit V.1-17 Expected Range of PRB Coal Trace Mineral Concentrations

PRB Coal Trace Mineral Concentrations, µg/g in Coal	
Arsenic	0.5 - 14
Boron	20 - 87
Barium	120 - 640
Cadmium	0.01 – 0.38
Chromium	1.3 - 22
Copper	2.4 - 30
Lead	0.73 - 14
Mercury	0.03 – 0.26
Nickel	1.3 - 16
Selenium	0.28 – 2.4
Vanadium	4.1 - 49
Fluorine	15 - 140
Beryllium	0.08 – 2.1
Zinc	1.6 – 49
Note: Source for all elements except Mercury and Fluorine from Reference 5. Source for Mercury from average in Reference 6. Fluorine assumed to be 10% of chlorine concentration	

V.1.6.2.3 PRB Coal As-Received Size Distribution

The Wyodak-Anderson PRB coal will be purchased screened to the requirements of the BGL gasifier. The size requirement as specified by Envirotherm is ¼" x 2".[10] with maximum fines limited to a range from 25% to 40%.

V.1.6.3 Natural Gas

When natural gas is used as a fuel, analyses will be based on the composition and heating values shown in Exhibit V.1-18.[1]

Exhibit V.1-18 Natural Gas Composition and Heating Value

COMPONENT	VOLUME PERCENTAGE	
Methane, CH_4	93.1	
Ethane, C_2H_6	3.2	
Propane, C_3H_8	0.7	
n-Butane, C_4H_{10}	0.4	
Carbon Dioxide, CO_2	1.0	
Nitrogen, N_2	1.6	
	LOWER HEATING VALUE (LHV)	HIGHER HEATING VALUE (HHV)
MJ/scm	34.71	38.46
Btu/scf	932	1032

V.1.6.4 Start-Up Fuel

Startup fuel will be natural gas with the composition as provided in V.1.6.3.

V.1.7 OXYGEN SUPPLY

Oxygen meeting the specifications shown in Exhibit V.1-19 is purchased from a third party for delivery to the gasifier and for use in oxygen preheating. The quantity of oxygen to be supplied will be as shown in the material balance tables provided in the Conceptual Design Description and Cost Estimate for the respective Reference Plant (e.g. Conceptual Design Description and Cost Estimate for the Syngas Production Reference Plant in Section VI).

Exhibit V.1-19 Oxygen Specifications

Oxygen Specifications	
O_2 Content, % (vol.)	99.5
Pressure, psia	517

V.1.8 NITROGEN

Nitrogen meeting the specifications shown in Exhibit V.1-20 for vessel purging, pressurizing lock hoppers, and as diluent for NOx control in the combustion turbines, when applicable, is purchased from a third party. The quantity of nitrogen to be supplied will be as shown in the material balance tables provided in the Conceptual

Design Description and Cost Estimate for the respective Reference Plant.

Exhibit V.1-20 Nitrogen Specifications

USE	PRESSURE PSIA
Pressurize Lock Hopper	580
Purge Lock Hopper	580
Purge Gasifier	580
Combustion Turbine	As specified in Conceptual Design Description for power options

V.1.9 LIMESTONE AND REAGENTS

V.1.9.1 Limestone Composition

The nominal design composition of the limestone to be used as a fluxing agent in the gasifier is shown in Exhibit V.1-21. The composition is selected based on the recommendations in the Quality Guidelines for Energy System Studies for non-site specific studies.[11]

Exhibit V.1-21 Limestone Design Composition

Design Limestone Analysis (Dry)	
$CaCO_3$	80.40%
$MgCO_3$	3.5%
SiO_2	10.32%
Al2O3	3.16%
Fe2O3	1.24%
Na2O	0.23%
K2O	0.72%
Balance	0.43%
Total	100.0%

Source: Reference[11]

V.1.9.2 Limestone Size Distribution

The limestone that is used as a fluxing agent in the gasifier will be purchased screened to the ¼" x ¾" for delivery to the BGL gasifier.

V.1.10 SPECIFICATION FOR PIPELINE NATURAL GAS QUALITY

SNG produced in the SNG production reference plants will meet the specifications in Exhibit V.1-22 for pipeline quality natural gas.

Exhibit V.1-22 SNG Quality Specifications

Parameter	Criteria
Higher Heating Value, Btu/scf	950 – 1,100 or 70% methane[a]
Total Sulfur, gr/100scf	<0.5[a]
CO_2 and N_2, mol%	<5[b]
Water vapor, lb/million scf	<7[b]
H_2S, ppmv	<4[b]
Hydrocarbon Dew Point: °F	15
Wobbe Index	1,310 – 1,390[b]

Notes: [a] EPA 40 CFR Part 72.2 [b] Varies with pipeline. Values recommended by Praxair

V.1.11 ELECTRICAL POWER

Electrical power for operation of motors, compressors, pumps, and other electric power process equipment will be purchased from the local electric power provider in reference plants that do not contain a combustion turbine combined cycle. Electrical power required for these operations in reference plants containing a combustion turbine combined cycle will be obtained from the combustion turbine combined cycle electrical distribution system. The quantity and conditions of the electrical power will be as identified in the Conceptual Design Description and Cost Estimate for the respective Reference Plant

V.1.12 AIR SEPARATION UNIT (ASU)

The ASU owned and operated by a third party will supply oxygen and nitrogen meeting the oxygen and nitrogen flow rates and conditions, and availability requirement as identified in the Conceptual Design Description and Cost Estimate for the respective Reference Plant. All utilities for operation of the ASU will be the responsibility of the third party. The syngas process owner will provide land space with dimensions of about 290 ft. by 300 ft for the ASU plant based on an oxygen production rate of 580 tons/day.

V.1.13 PLANT OPERATING CRITERIA

V.1.13.1 Duty

The plant will operate 24 hours a day, 7 days a week, 52 weeks a year minus planned downtime for scheduled maintenance. The plant will operate primarily as a base-load unit, with infrequent stop-start cycles. It should be designed with reliability features that would keep the unit in service with a minimal requirement for forced outages.

V.1.13.2 Capacity Factor

The annual capacity factor of the Reference Syngas Production Plant, defined as the plant annual syngas production divided by the rated output times 8,760 hours in accordance with DOE Quality Guidelines for Energy System Studies[1], is expected to be about 95%. Information published by The Dakota Gasification Company indicates that the Great Plains Synfuels Plant has successfully operated 14 Lurgi gasifiers without a spare while maintaining an annual plant loading as high as 92%.[12] That is, the plant annually produces up to 92% of its rated output capacity. Personnel with experience at the Great Plains Synfuels Plant indicate that corrosion issues in the boiler system, which uses H_2S-rich waste gas from the Rectisol Process as fuel, has historically cost the plant over 2% in availability. The Reference Plant conceptual design for this study sends the H_2S rich gas to a Claus Unit for recovery of sulfur, and uses clean gas from the Rectisol Process as the fuel in the fired boiler. It has also been indicated that because the Great Plains Synfuels Plant has been operating at greater than design capacity, the resulting hydraulic overload of the gas liquor separation system and Phenosolvan system, and its impact on the plant cooling water system, has adversely affected annual plant capacity factor. The incorporation of a dedicated spare gasifier in the Reference Plant is expected to further increase the plant capacity factor over that achieved in the Great Plains Synfuels Plant.

The Syngas to Power Reference Plant and SNG to Power Reference Plant will have an annual capacity factor of 92% based on one operating gasifier and one spare gasifier.

V.1.13.3 Hydrogen Production

For cases in which the BGL gasifier produces hydrogen, “natural” first pass hydrogen in the syngas from the gasifier process (without a water-gas shift reaction) will be removed from the syngas stream via Pressure Swing Adsorption system (PSA). The flow rate,

composition, and conditions of the syngas to the PSA will be as identified in the material balance tables in the Conceptual Design Description and Cost Estimate for the respective Reference Plant.

V.1.13.4 Coal Receiving and Preparation

Coal will normally be delivered in trucks 7 hours per day, 5 days per week, 52 weeks per year.

Conveying systems for transporting coal from the long-term storage area to the short term storage silo will be designed to fill the storage silo in 7 hours during normal plant operation.

V.1.13.5 Limestone Receiving and Preparation

Limestone will normally be delivered in trucks 7 hours per day, 5 days per week, 52 weeks per year.

Conveying systems for transporting limestone from the long-term storage area to the short term storage silo will be designed to fill the storage silo in 7 hours during normal plant operation.

V.1.13.6 Plant Mass Flow and Heat Balances

Heat and mass balances required for estimating the performance and capital and O&M costs of the reference plants based on the ambient conditions identified in Section V.1.4 and the fuel, oxygen, nitrogen, and flux specifications identified in Sections V.1.6, through V.1.9 will be performed and identified in the Conceptual Design Description and Cost Estimate for the respective Reference Plant.

V.1.14 PLANT DESIGN LIFE

The plant design will be based on using components suitable for a 20-year life, with provision for periodic maintenance and replacement of critical parts.

V.1.15 GASIFIER PROCESS PACKAGE MASS BALANCE

Allied Syngas Corporation and Envirotherm GmbH will provide a mass and energy balance around the BGL1000 gasifier package to be used in the modeling and analysis of the project Reference Plants. Balances will be provided for gasification of reference Illinois #6 coal and PRB coal. A simplified process diagram for the gasification package is shown in Exhibit V.1-23.

Exhibit V.1-23 Simplified Process Schematic

Projekt: **USA Illinois 6**

ENVIROTHERM GmbH
ein Unternehmen der Allied Technologies Gruppe

PFB:

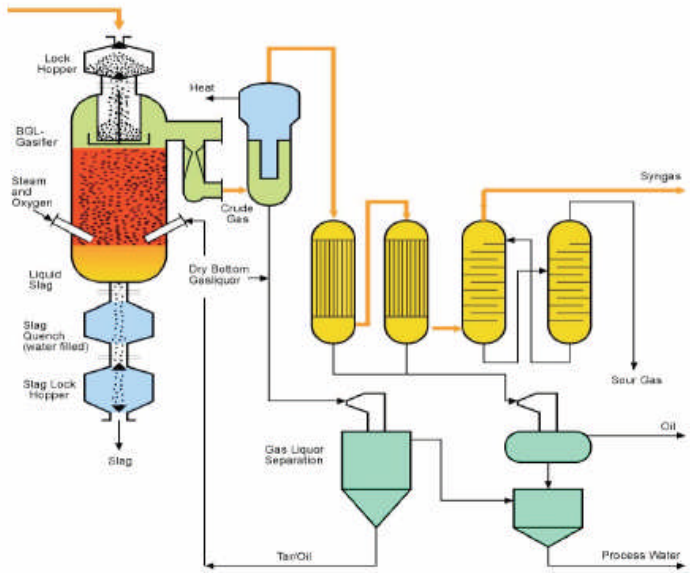

This page is intentionally left blank

V.2 MECHANICAL DESIGN CRITERIA

This Section establishes the criteria for mechanical design of the Reference Plant components and systems..

V.2.1 GASIFIER PROCESS PACKAGE EQUIPMENT

The gasifier process package is provided by Envirotherm GmbH. The components comprising the package are two gasifiers each with a feed lock, slag quench, slag lock, and syngas wash cooler; a syngas primary heat exchanger (also referred to as the waste heat exchanger or waste heat boiler); heat exchangers (syngas coolers) that cool the syngas to the temperature required for introduction to the syngas cleanup system; and the gas liquor separation and tar/oil re-injection system.

V.2.1.1 Gasifier

The gasifier will be the BGL1000 slagging gasifier with a nominal coal capacity of 1,000 tpd.

The gasifier will be oxygen-blown.

The gasifier will be capable of gasifying Illinois #6 and PRB coals.

The gasifier process will recycle tars and oils to extinction.

V.2.1.1.1 Design Parameters

The design for the Gasifier is the responsibility of Envirotherm GmbH. The flow rate and conditions of the flow streams to the gasifier are identified in the material balance tables provided in the Conceptual Design Description and Cost Estimate for the respective Reference Plant..

V.2.1.1.2 Material Specifications

The gasifier vessel is constructed of carbon steel, and is refractory lined.

V.2.1.2 Wash Cooler

The wash cooler will quench the gas leaving the gasifier from a temperature of up to 1,000°F to a temperature of about 330°F (165°C) using excess liquor recycled from the gas liquor separation system. Simultaneously, dust carried with the gas and tar is removed from the gas.

V.2.1.2.1 Design Parameters

The design for the Wash Cooler is the responsibility of Envirotherm GmbH. The flow rate and conditions of the flow streams to the gasifier are identified in the material balance tables provided in the Conceptual Design Description and Cost Estimate for the respective Reference Plant..

V.2.1.3 Primary Heat Exchanger (Waste Heat Exchanger or Waste Heat Boiler)

The primary heat exchanger will cool the syngas from the wash cooler to about 310°F (155°C). The gas and liquor mixture from the wash cooler enters the sump of the primary heat exchanger where sufficient time is provided for the gas to disengage from the liquor, thus removing tar, oils, and dust from the gas before it is transported to the syngas cleanup system. Gas liquor condensate from the primary heat exchanger will be discharged to the Gas Liquor Separation System.

V.2.1.3.1 Design Parameters

The design for the Primary Heat Exchanger is the responsibility of Envirotherm GmbH. The flow rate and conditions of the flow streams to the gasifier are identified in the material balance tables provided in the Conceptual Design Description and Cost Estimate for the respective Reference Plant.

V.2.1.4 Syngas Coolers

Syngas coolers will cool the 310°F gas from the primary heat exchanger to a temperature of about 95°F (35°C) for delivery to the syngas cleanup system. Cooling water will be used for cooling the syngas. Gas liquor condensate from the syngas coolers will be discharged to the Gas Liquor Separation System.

V.2.1.4.1 Design Parameters

V.2.1.4.1.1 Gas to the Syngas Coolers

The design for the Syngas Coolers is the responsibility of Envirotherm GmbH. The syngas coolers are of the tube bundle design with the gas inside the tubes and the cooling water on the shell side. The flow rate, composition, and conditions of the gas from the primary heat exchanger to the syngas coolers as calculated from data provided by Allied Syngas Corporation are provided in the material balance tables in the Conceptual Design Description and Cost Estimate for the respective Reference Plant.

V.2.1.5 Gas Liquor Separation and Tar/Oil Re-injection System

The gas liquor separation system will separate the various gaseous, liquid, and solid components present in the liquor streams originating from the gasification and gas cooling units. The system also provides equipment for gas liquor re-injection into the wash cooler as well as for the recirculation and re-injection of tar/oil into the gasifier. The phenol containing liquor from the gas liquor separation system is discharged to the Gas Liquor Treatment System.

V.2.1.5.1 Design Parameters

The flow rates, compositions, and conditions of the input streams to and output streams from the Gas Liquor Separation and Tar/Oil Re-injection System are identified in the material balance tables provided in the Conceptual Design Description and Cost Estimate for the respective Reference Plant.

V.2.2 SYNGAS CLEANUP SYSTEM

V.2.2.1 AGR System

The AGR system will remove sulfur contained in the H_2S and COS in the syngas via a Rectisol process such that the sulfur emissions from end-use equipment meet the specifications in Section V.1.5 or the sulfur specifications of downstream equipment are met. The AGR system will also remove benzene, toluene, and xylene (naphtha-BTX) from the syngas stream for recycle to the gasifier. A small portion of the product syngas will be used as fuel in a syngas-fired boiler or combustion turbine combined cycle HRSG, depending on the Reference Plant, generating steam for the gasifier and oxygen preheater.

The Rectisol process was selected for acid gas removal based on results of a preliminary evaluation of commercially available AGR technologies. The raw gas stream from the BGL gasifier contains typical components found in any synthesis gas stream generated through coal gasification. These components include CO, H_2, CO_2, and H_2O. Reduced sulfur species such as H_2S and COS are also present as expected along with elemental Ar and N_2. What is atypical of the raw gas stream from the BGL gasifier (relative to high temperature gasification processes) is the presence of naphtha (BTX – benzene, toluene, xylene) and a relatively large amount of longer chain hydrocarbons in the form of olefins and paraffins. The AGR process integrated with the selected for integration with the BGL gasifier must meet the following functional requirements:

- Remove H_2S and COS to satisfy SO_2 emissions limits from downstream combustion process, or provide a virtually sulfur-free synthesis gas for downstream catalytic conversion of the synthesis gas to a value added chemical,
- Generate a concentrated H_2S stream with contamination levels meeting requirements for producing a high quality elemental sulfur product in the Claus Unit,
- Maximize hydrocarbon retention in the syngas product or recycle hydrocarbons back to the gasifier, and
- Eliminate generation of hazardous effluents

The commercially available processes evaluated and the vendors or users contacted for information on the processes are as follows:

- Rectisol Process – Dakota Gasification Plant and Envirotherm GmbH
- The Selexol Process – UOP
- The Ucarsol Amine Process – Dow Chemical Company
- The Hybrid FLEXSORB SE Process – ExxonMobil

These three processes incorporate all of the commercially available AGR processes. The Rectisol Process and Selexol Process use physical solvents. The Rectisol Process uses methanol, and the Selexol Process uses dimethyl ether of polyethylene glycol. The Ucarsol Process uses a chemical solvent, and the FLEXSORB SE Process uses a hybrid mixture of physical and chemical solvents.

Sud Chemie was also contacted in regards to their COS Hydrolysis Catalyst. In order to control the sulfur content of the sweet gas, a

COS Hydrolysis Reactor would be required if the AGR process used a solvent that did not selectively remove COS along with H_2S. In the Hydrolysis Reactor, COS would be hydrolyzed to H_2S. The H_2S would be removed in the selected AGR process.

The advantages and disadvantages of each process for application to the BGL gasifier-based reference plants are summarized in Exhibit V.2-1 through Exhibit V.2-4.

Exhibit V.2-1 Advantages and Disadvantages of the Rectisol Process

ADVANTAGES	DISADVANTAGES
• Removes HCN, NH_3, and BTX in the prewash step • HCN, NH_3, and BTX are easily liberated from the solvent allowing the BTX to be recycled to the gasifier and the solvent to be recycled in the AGR • H_2S and COS are removed in the secondary step in the same absorption vessel and concentrated in a single acid gas stream for treatment in the Claus Unit • Paraffins and olefins absorbed along with acid gases can be liberated from the acid gases and recombined with the sweet syngas product • There is significant Rectisol operating experience with fixed bed gasifiers and is the only AGR operating commercially with this type gasifier • Removes sulfur to low levels required to meet methanation catalyst specifications • Provides deep CO_2 removal that is required for SNG production and/or CO_2 sequestration.	• Low operating temperatures (as low as -100°F) requires refrigeration system with relatively high auxiliary power load • Relatively complex system with several regeneration vessels to liberate acid gases and regenerate solvent, resulting in relatively high cost.

Exhibit V.2-2 Advantages and Disadvantages of the Selexol Process

ADVANTAGES	DISADVANTAGES
• Well-known and widely used process • Typically is a two-column process versus three columns required in the Rectisol process	• Cannot remove COS, thus requiring additional of a COS hydrolysis unit and reheating the syngas to bout 400°F before introducing it into the hydrolysis unit. Requires additional steam generation and equipment. • BTX will dissolve in solvent and UOP does not have a way of removing it separate from the acid gas. Concentrations will be unacceptable to the Claus Unit. BTX can be removed in a pretreatment process after COS hydrolysis using methanol, Purisol, or light oil wash but would required addition of at least two columns and would likely increase cost significantly. • Paraffins and olefins will dissolve in the solvent and contaminate the acid gas to the Claus Unit resulting in a low-grade sulfur byproduct.

Exhibit V.2-3 Advantages and Disadvantages of the Ucarsol Process

ADVANTAGES	DISADVANTAGES
• Well known and marketed by DOW Chemical Company • Uses MDEA as solvent with which there is experience in IGCC plants with entrained flow gasifiers • May remove and allow for recovery of BTX	• Cannot remove COS, thus requiring additional of a COS hydrolysis unit and reheating the syngas to bout 400°F before introducing it into the hydrolysis unit. Requires additional steam generation and equipment. • DOW believes that BTX can be removed, but may require a three-phase separation system used as a reflux drum. Approach of capturing BTX in solvent is unproven and would need additional process design and testing • BTX could be removed with pretreatment process but would require the addition of at least two columns, adding additional complexity and likely significant cost • Simulation indicates that sulfur can be removed from syngas to < 20 ppm to meet syngas criterion, but probably not low enough for SNG criterion

Exhibit V.2-4 Advantages and Disadvantages of the Flexol SE Process

ADVANTAGES	DISADVANTAGES
• Well known and marketed by ExxonMobile Company • H_2S can be concentrated to 50% in the acid gas stream unaccompanied by appreciable amounts of hydrocarbons, including BTX • Bulk of the hydrocarbons remain in the treated syngas	• Will not remove large percentage of COS, thus requiring additional of a COS hydrolysis unit and reheating the syngas to bout 400°F before introducing it into the hydrolysis unit. Requires additional steam generation and equipment. • Removes sulfur to only about 20 ppm in the syngas

Results of the evaluation are as follows:

- ♦ The Rectisol Process appears to be most appropriate for AGR application with the BGL gasifier because of its ability to remove H_2S and COS to the levels meeting the sulfur concentration criteria for the cleaned gas, remove BTX for recycle back to the gasifier, and liberate paraffins and olefins absorbed along with the acid gases from the acid gases for recombining with the sweet syngas product. There is also significant operating experience with the fixed bed gasifier, and it is the only AGR operating commercially with this type gasifier
- ♦ The Selexol Process is not a viable alternative because of hydrocarbon contamination of gas to the Claus Unit
- ♦ The Ucarsol Process is marginally applicable to syngas production with the BGL gasifier. A COS Hydrolysis Unit would be required as well as possibly a BTX pretreatment process.
- ♦ The Hybrid FLEXSORB SE process would require the addition of a COS Hydrolysis Unit increasing the complexity and cost, and cannot meet the sulfur removal requirements for SNG production. A more detailed techno-economic evaluation would be required to verify the technical and economic viability of the Hybrid FLEXSORB SE process for syngas production with the BGL gasifier.

V.2.2.1.1 Design Parameters

V.2.2.1.1.1 Syngas Composition and Conditions to the AGR System

The flowrates, compositions, and conditions of the flow streams to and from the AGR system calculated based on the data received from Allied Syngas Corporation are identified in the material balance

tables provided in the Conceptual Design Description and Cost Estimate for the respective Reference Plant. An equipment list for the AGR process is also provided in those documents.

V.2.2.2 Sulfur Production (Claus) System

A Claus unit will convert the H_2S in the acid gas and sour gas from the Rectisol process, and sour gas from the gas liquor separation system into elemental sulfur. It will also use syngas from the flash regenerator in the Rectisol process in the system's hydrogenation reactor. The flowrates, compositions, and conditions of the streams to and from the Claus system are identified in the material balance tables provided in the Conceptual Design Description and Cost Estimate for the respective Reference Plant

V.2.2.2.1 Design Parameters

The flowrates, compositions, and conditions of the flow streams to and from the Claus system are identified in the material balance tables provided in the Conceptual Design Description and Cost Estimate for the respective Reference Plant. An equipment list for the Claus system is also provided in those documents.

V.2.3 PROCESS STEAM SYSTEM

The process steam system will collect and supply steam to the gasifier, oxygen preheater, methanol stripper, Rectisol unit, waste water treatment system, and gas liquor heater. A syngas-fired boiler will supply steam for the gasifier and oxygen preheater. The system will supply boiler feedwater (BFW) to the gasification system waste heat boiler (primary heat exchanger), Claus process, and in cases that do not have a combustion turbine combined cycle to a syngas-fired boiler. The process will receive steam from the Claus process and gasification system waste heat boiler, and condensate from the Claus process, oxygen preheater, methanol stripper, Rectisol unit, waste water treatment system, and gas liquor heater for distribution. An equipment list for the process steam system is provided in the Conceptual Design Description and Cost Estimate for the respective Reference Plant.

V.2.3.1 Syngas-Fired Boiler Subsystem

For cases that do not have a combustion turbine combined cycle, a syngas-fired boiler provides steam to the gasifier and oxygen preheater. Blowdown from the boiler will be directed to the wastewater treatment system.

V.2.3.1.1 Design Parameters

V.2.3.1.1.1 Supply Steam Conditions

The flow rate and conditions of the steam to be supplied to the gasifier based on data provided by Allied Syngas Corporation are identified in the material balance tables provided in the Conceptual Design Description and Cost Estimate for the respective Reference Plant.

V.2.3.1.1.2 Fuel to Boiler

The fuel for firing the boiler will be syngas from the Rectisol unit and MIBK stripper gas from the waste water treatment system when only syngas is being produced. The boiler fuel will be MIBK stripper gas and syngas from the Pressure Swing Adsorption process when hydrogen is also produced. The flow rates, compositions, and conditions of the fuel to the boiler are shown in the material balance tables provided in the Conceptual Design Description and Cost Estimate for the respective Reference Plant.

V.2.3.1.1.3 Combustion Air to Boiler

Air will be supplied by a blower to the boiler. The flow rate and conditions of the air to the boiler are identified in the material balance tables provided in the Conceptual Design Description and Cost Estimate for the respective Reference Plant.

V.2.3.1.1.4 Boiler Feedwater to Boiler

Boiler feedwater (BFW) will be supplied to the boiler by the steam subsystem at the flow rate and conditions shown in the material balance tables provided in the Conceptual Design Description and Cost Estimate for the respective Reference Plant.

V.2.3.2 Steam Subsystem

The steam subsystem will supply low pressure steam from the Claus unit and the Primary Heat Exchanger (Waste Heat Exchanger) to the methanol stripper, Rectisol unit, waste water treatment system, gas liquor heater and other steam using processes. It will also collect condensate from these systems, the Claus unit, and the oxygen preheater. The subsystem will deaerate the condensate and supply boiler feedwater to the waste heat exchanger, Claus unit, and the syngas-fired boiler or combustion turbine combined cycle HRSG if the plant has one.

V.2.3.2.1 Design Parameters

The flowrates and conditions for the steam and condensate to and from the Steam Subsystem components are shown in the Conceptual Design Description and Cost Estimate for the respective Reference Plant.

V.2.4 PRESSURE SWING ADSORPTION SYSTEM (H_2 PRODUCTION OPTION)

The Pressure Swing Adsorption (PSA) system will remove hydrogen from the sweet syngas from the Rectisol AGR system.

V.2.4.1 Design Parameters

The flow rate, composition, and conditions of the syngas to the PSA are identified in the material balance tables in the Conceptual Design Description and Cost Estimate for the Syngas and H_2 Co-production Reference Plant.

The hydrogen product will be 99.9% pure.

The syngas from the PSA will be suitable for use as a fuel in an industrial boiler.

V.2.5 WATER-GAS SHIFT REACTION SYSTEM (SNG PRODUCTION OPTION)

The water-gas shift reaction system consists of the components required to convert CO in a portion of the syngas from the waste heat boiler in the gasification process to H_2 and CO_2, to result in a proper ratio of H_2 to carbon in the syngas to the methanation process, using water introduced into a fixed-bed catalytic reactor. The system will be a sour shift reaction system.

V.2.5.1 Design Parameters

The flow rates, compositions, and conditions of the syngas to the water-shift reaction system and shifted syngas from the reaction system are shown in the material balance tables in the Conceptual Design Description and Cost Estimate for the SNG Production Reference Plant and the SNG to Power Production Reference Plant. An equipment list for the water-shift reaction system is also provided in those documents.

V.2.6 METHANATION SYSTEM (SNG PRODUCTION OPTION)

The methanation system consists of the components required to convert the syngas from the Rectisol AGR system to a substitute natural gas meeting the specifications for pipeline natural gas as defined in Section V.1.10. An equipment list for the methanation system is also provided in the Conceptual Design Description and Cost Estimate for the SNG Production Reference Plant and the SNG to Power Production Reference Plant.

V.2.6.1 Design Parameters

The flow rates, compositions, and conditions of the flow streams to and from the components in the methanation system are shown in the material balance tables in the Conceptual Design Description and Cost Estimate for the SNG Production Reference Plant and the SNG to Power Production Reference Plant.

V.2.7 CIRCULATING WATER AND MAKE-UP WATER SYSTEMS

The circulating water and make-up system will supply water to the plant systems for component cooling. The circulating water will be cooled in a plume-abated wet/dry mechanical cooling tower.[1]

V.2.7.1 Design Parameters

The cooling water requirements and makeup water requirements for the plant processes are shown in the Conceptual Design Description and Cost Estimate for the respective Reference Plant.

Cooling water for the ASU is considered to be included in the gas supplier's scope, not the syngas plant scope. An estimate of the ASU cooling requirement is provided in the Conceptual Design Description and Cost Estimate for the respective Reference Plant.

V.2.8 WASTE WATER TREATMENT SYSTEM

The waste water treatment system will treat the waste water and gas liquor condensate from the processes as required to meet the water discharge regulatory requirements identified in Section V.1.5. The system will use steam stripping and biological reactions to treat the water.

The waste water will come from the Rectisol unit (methanol stripper bottoms), Claus Unit (blowdown), and waste heat exchanger steam drum blowdown. Gas liquor condensate will come from the gas liquor separation system. Phenol from the MIBK stripper will be recycled to the gasifier through the liquid products tank in the gas liquor separation system. Sour gas from the sour gas stripper will be directed to the Claus unit, and tail gas from the MIBK stripper will be used as fuel in the syngas-fired boiler. Clean water from the waste water treatment system will be used to the extent practicable as a source of water for processes in the syngas production plant, and any excess clean water will be discharged in accordance with local regulations.

An equipment list for the waste water treatment system is provided in the Conceptual Design Description and Cost Estimate for the respective Reference Plant.

V.2.8.1 Design Parameters

The flows, compositions, and conditions of the input streams to the components in the waste water treatment system are shown in the material balance tables provided in the Conceptual Design Description and Cost Estimate for the respective Reference Plant.

V.2.9 MATERIAL HANDLING SYSTEMS

V.2.9.1 Coal and Limestone Receiving, Storage and Handling

The Coal and Limestone Receiving, Storage, and Handling System shall be designed to receive, unload, transport coal and limestone to storage, reclaim from the coal and limestone storage piles, and transport the coal and limestone to the gasifier feed system. An equipment list for the coal and limestone receiving, storage, and handling systems is provided in the Conceptual Design Description for the Syngas Production Reference Plant.

V.2.9.1.1 Coal Receiving and Storage

The Coal Receiving and Storage shall be designed to receive coal by truck. The trucks shall be weighed and then proceed to the coal pile, where they will unload. The empty trucks will be weighed after unloading. Scales shall be capable of weighing all the expected type trucks.

- The truck receiving area shall be designed to receive and unload coal trucks 5 days per week, 7 hours per day. Trucks will not typically be unloaded at night or on weekends.
- Coal trucks may range from a 23 ton net tri-axle up to a “Kentucky” type truck rated for 50 ton net weight.
- The truck receiving and unloading system will be designed to unload a minimum of 70 trucks per day (10 trucks per hour).
- The as-received coal storage area will be sized to store 14 days requirement of the gasification process at 100% load.

V.2.9.1.2 Limestone Receiving and Storage

The Limestone Receiving and Storage shall be designed to receive limestone by truck. The trucks shall be weighed and then proceed to the

limestone pile, where they will unload. The empty trucks will be weighed after unloading. Scales shall be capable of weighing all the expected type trucks

- The truck receiving area shall be designed to receive and unload coal trucks 5 days per week, 7 hours per day. Trucks will not typically be unloaded at night or on weekends.
- Limestone trucks will be 23 ton net tri-axle.
- The truck receiving and unloading system will be designed to unload a minimum of 10 limestone trucks per day.
- The as-received limestone storage area will be sized to store 14 days requirement of the gasification process at 100% load

V.2.9.1.3 Coal and Limestone Handling

The coal and limestone handling system shall reclaim coal and limestone from their respective storage areas, transport the coal and limestone to day bins, weigh and transport coal and limestone from the day bins to a feed hopper, and transport coal and limestone from the feed hopper to the gasifier lock hopper.

- The coal “day bin” will be sized for 18 hours requirement of the gasification process at 100% load.
- The limestone “day bin” will be sized for 18 hours requirement of the gasification process at 100% load.
- The coal day bin delivery system will be sized to fill the day bin in no more than 7 hours.
- The limestone day bin delivery system will be sized to fill the day bin in no more than 7 hours.
- Coal and limestone will be mechanically conveyed from their respective storage areas to their respective day bins using high angle conveyors to minimize land requirement.
- Coal and limestone will be mechanically conveyed from their day bins to the gasifier using two 100% capacity high angle conveyors to minimize land requirement.
- Coal will be screened to separate oversize (>2”) material.
- Magnetic material will be separated from the coal prior to delivering the coal to the coal storage silo.
- Coal will be mixed with limestone prior to transport to the gasifier.

- Coal and limestone mixture will be stored in a hopper with 1 hour capacity above the gasifier and will be delivered to the gasifier feed lockhopper in 7-ton batches.

V.2.9.1.4 Conveyor Enclosures

All conveyors will be enclosed.

V.2.9.1.5 Ventilation and Dust Control

All conveying systems will have dust suppression and dust control systems.

V.2.9.2 Slag Handling Systems

The slag handling system shall be designed to collect at least 7 tons/hour of slag from the slag lock hopper in the gasifier process and transport the slag to a truck loading area.

V.2.10 SYNGAS FLARE SYSTEM

On gasifier start-up, all syngas gas from the gasifier is sent to a gasifier start-up flare until the gasification process has been stabilized on coal. A knock-out vessel removes excess liquids and solids from the gas prior to the gas being introduced into the flare to prevent plugging of the flare system and to minimize emissions during the start-up period. After the gasifier operation is stabilized, the syngas is transported to the gas cleanup system. The syngas from the gas cleanup system is sent to a separate main flare until the syngas meets specifications for the syngas conversion systems and product SNG specifications. The syngas or SNG will also be sent to the main flare system when the performance of any system treating the syngas or gas liquor becomes insufficient to continue safe operation of the system or meet SNG product quality specifications. From an economic standpoint, it is necessary to keep flaring as short as possible. From the emissions point of view, the most important aspect of the stabilization process is to ensure that desulfurization of the syngas and recovery of sulfur take place as quickly as possible.

The syngas flare will be an elevated flare. The flare will be designed to handle the total quantity of syngas produced from the gasifier at 100% load. The height of the flare will be based on a radiant heat level not to exceed:

- 300 Btu/hr/ft^2 in areas where personnel will not have protective clothing,

- 500 Btu/hr/ft^2 in areas where personnel will be continuously exposed and wearing appropriate protective clothing,
- 5,000 Btu/hr/ft^2 where there is sufficient clear space to ensure that personnel and flammable material will remain out of the area.

V.2.11 COMBUSTION TURBINE (COMBINED CYCLE OPTION)

Syngas-fired combustion turbines will have dual firing capability with the fuels being cleaned syngas produced by the syngas production plant and natural gas. The combustion turbine for cases with combustion turbine combined cycles will be selected based on matching as close as possible the fuel requirements of the combustion turbine with the output of the syngas production process, the commercial availability of the combustion turbine, and its syngas firing experience. The combustion turbine will be connected to a generator for producing electrical power. The combustion turbine exhaust will be used in a HRSG to produce steam for an electric power generating steam turbine.

V.2.11.1 Design Parameters

V.2.11.1.1Syngas or SNG Composition and Conditions to Combustion Turbine

The estimate flow rates, compositions, and conditions of the syngas or SNG to the combustion turbine are identified in the material balance tables provided in the Conceptual Design Description and Cost Estimate for the respective Reference Plant.

V.2.11.1.2Start-up Fuel:

The startup fuel will be natural gas.

V.2.11.1.3Ambient Air Conditions

The ambient air conditions are those specified in Section V.1.4.

V.2.11.1.4Emissions

Emissions from the combustion turbine will not exceed the criteria defined in Section V.1.5.

V.2.12 HEAT RECOVERY STEAM GENERATOR (COMBINED-CYCLE OPTION)

The heat recovery steam generator (HRSG) will produce steam for a steam turbine using heat from the exhaust of a combustion turbine

and supplemental syngas from the Rectisol AGR system and other processes. The HRSG will also produce steam for the gasifier and oxygen heater in the gasification process.

V.2.12.1 Design Parameters

V.2.12.1.1Gas Turbine Exhaust Conditions

The gas turbine exhaust conditions are identified in the material balance tables provided in the Conceptual Design Description and Cost Estimate for the respective Reference Plant.

V.2.12.1.2Supplemental Fuel

The composition, flow rate, and conditions of the supplemental fuel to the HRSG are identified in the material balance tables provided in the Conceptual Design Description and Cost Estimate for the respective Reference Plant.

V.2.12.1.3*Steam Conditions*

The steam flow rates and conditions requirements from the HRSG are shown in the material balance tables provided in the Conceptual Design Description and Cost Estimate for the respective Reference Plant.

V.2.12.1.4*Feedwater Conditions*

The feedwater flow rates and conditions to the HRSG are shown in the material balance tables provided in the Conceptual Design Description and Cost Estimate for the respective Reference Plant.

V.3 CONTROLS SYSTEMS

Each of the systems comprising the reference plants will contain the instrumentation necessary to monitor the critical operating parameters. Each of the systems will be controlled by a digital control system (DCS) that is integrated with an overall plant DCS to result in efficient and safe operation of the plant processes.

This page intentionally left blank

V.4 ELECTRICAL SYSTEM

The electrical system will consist of the equipment necessary to receive and distribute power to the electrically driven components and building support systems in the reference plant and, in cases with a combustion turbine combined cycle, to a substation. It includes station service equipment, switchgear and motor control centers, conduit and cable trays, wire and cables, protective equipment (grounding, cathodic protection, etc.), and standby equipment. The auxiliary electric power requirements, gross electrical power output of the combustion turbine combined cycle, of the plant are provided in the Conceptual Design Description and Cost Estimate for the respective Reference Plant.

This page intentionally left blank

V.5 CIVIL, STRUCTURAL, AND ARCHITECTURAL REQUIREMENTS

All civil, structural, and architectural work required for construction of the plant facilities and installation and erection of equipment will be provided.

This page intentionally left blank

V.6 COST ESTIMATING CRITERIA

V.6.1 CAPITAL COST ESTIMATING

- Capital costs estimates will include
  - cost of equipment, buildings, and structures;
  - materials and labor for installation of equipment, improvements to site, and construction of buildings and structures;
  - cost of professional services for the engineering & design of the syngas balance of plant, construction management of the syngas plant, and craft labor in support of plant startup but not the costs of owner's plant startup;
  - An allowance for startup spare parts but not the cost of initial spare part inventory;
  - An allowance for Builders Risk and General Liability Insurance.
- Capital costs will not include sales tax, escalation, and owner's cost.
- Capital costs will be developed primarily based on WorleyParsons in-house data supported by vendor furnished budgetary costs as available.
- Construction of the project will be based on the owner purchasing equipment, retaining the services of an engineering/design/construction manager firm and executing construction with multiple contracts.
- Construction labor rates will be based on Gulf Coast, non-Union rates.
- Construction cost will be based on a 40 hour work week with spot overtime
- Equipment costs will be based on use of United States equipment vendors

V.6.2 OPERATING AND MAINTENANCE (O&M) COST ESTIMATING

- O&M estimate will be the average annual cost;
- Plant annual capacity factor used will be 95%, based on using a spare gasifer, for syngas and SNG production, and 92% for electric power production;
- Operating labor rates will be Gulf Coast, non-Union labor rates;
- Operator labor burden is 30% of base labor, and Overhead charge is 25% of all plant labor
- Average annual maintenance material and labor
- Consumable/Product prices as shown in Exhibit V.6-1

Exhibit V.6-1 Consumable/Product Price Assumptions

CONSUMABLE/PRODUCT	PRICE ASSUMPTION	BASIS
Illinois #6 Coal	$33/short ton	EIA 2005 Year-to-Date (June 2005) data
PRB Coal	$18/short ton	EIA Coal News and Markets (Feb. 19, 2006)
Limestone	$20/short ton	DOE Market Based Study Update
Oxygen	$34.50/short ton	Vendor Budgetary Estimate
Nitrogen	$17/short ton	Vendor Budgetary Estimate
Natural Gas	$7/MMBtu	EIA 2005 Year-to-Date (July 2005) data
Electricity	$40/MW-hr	Allied Syngas Corporation
Methanol	$282/short ton	Methanex Monthly Average Regional Posted Contract Price History. Avg. 10 months 2005
Slag Disposal	$16/short ton	WorleyParsons Cost Estimate
Elemental Sulfur	$25/short ton	USGS estimated 2004 average price f.o.b. mine and/or plant[13]
Carbon for Hg Removal (if Req'd)	$6.51/lb	DOE Market Based Study Update
Ammonia (28% NH3)	$190/short ton	DOE Market Based Study Update
Water	$0.43/gallon	WorleyParsons Cost Estimate
MU & WT Chemicals	0.16/lb	DOE Market Based Study Update

V.7 SECTION V REFERENCES

[1] "Quality Guidelines for Energy System Studies." Prepared by Office of Systems and Policy Support. February 24, 2004. pg. 17.

[2] Treatment and Testing of Wastewaters and Slags From the British Gas /Lurgi (BGL) Gasifier. EPRI GS-7092. December 1991.

[3] Treatability Testing of British Gas/Lurgi (BGL) Coal Gasification Wastewater. EPRI GS-7108, December 1991.

[4] Penn State Coal Sample Bank and Database --- WWW Subset. State: Illinois. Seam: Illinois #6. Province: Eastern Region. http://www.energy.psu.edu/COPL/coal.html

[5] The Chemical Analysis of Argonne Premium Coal Samples. Edited by Chris A. Palmer. 1997. U. S. Geological Survey Bulletin 2144. Table 6. http://pubs.usgs.gov/bul/b2144/compilation_tables/table6.htm.

[6] The Chemical Analysis of Argonne Premium Coal Samples. Edited by Chris A. Palmer. 1997. U. S. Geological Survey Bulletin 2144. Table 2. http://pubs.usgs.gov/bul/b2144/compilation_tables/table2.htm.

[7] Design Coal Selection for the Market Based Advanced Coal Power Systems Comparison Study. Revision 0, January 18, 2005

[8] USGS National Coal Resource Data System US Coal Quality Database. http://energy.er.usgs.gov/products/databases/CoalQual/intro.htm

[9] "BGL DRD Fuel Characteristic Requirements.doc". Attachment to e-mail from Bill Jones (Allied Syngas Corporation) to Hansjobst Herschfelder (Envirotherm) dated 5/2/2005.

[10] "BGL DRD Fuel Characteristic Requirements.doc". Attachment to e-mail from Bill Jones (Allied Syngas Corporation) to Hansjobst Herschfelder (Environtherm) dated 5/2/2005.

[11] "Quality Guidelines for Energy System Studies." Prepared by Office of Systems and Policy Support. February 24, 2004. Table 3. pg. 13.

[12] CO_2 Recovery and Sequestration at Dakota Gasification Company. Daren Eliason. 2004 Gasification Technologies Conference. October 4, 2004.

[13] Minerals Commodity Summaries – Sulfur - 2005. U.S. Geological Survey. http://minerals.usgs.gov/minerals/pubs/commodity/sulfur/

Industrial Size Gasification for Syngas, Substitute Natural Gas and Power Production

Section VI - Case 1A Conceptual Design Description
Syngas Production Reference Plant – Illinois #6 Coal

DOE/NETL-401 / 040607

FR-53769211

April 2007

Disclaimer

This report was prepared as an account of work sponsored by an agency of the United States Government. Neither the United States Government nor any agency thereof, nor any of their employees, makes any warranty, express or implied, or assumes any legal liability or responsibility for the accuracy, completeness, or usefulness of any information, apparatus, product, or process disclosed, or represents that its use would not infringe privately owned rights. Reference therein to any specific commercial product, process, or service by trade name, trademark, manufacturer, or otherwise does not necessarily constitute or imply its endorsement, recommendation, or favoring by the United States Government or any agency thereof. The views and opinions of authors expressed therein do not necessarily state or reflect those of the United States Government or any agency thereof.

Industrial Size Gasification for Syngas, Substitute Natural Gas and Power Production

Section VI - Case 1A Conceptual Design Description
Syngas Production Reference Plant – Illinois #6 Coal

DOE/NETL-401 / 040607

FR-53769211

April 2007

NETL Contact: DE-AC26-04NT41817.401.01.05.002

Office of Systems Analysis and Planning Support

Prepared by:

Leonard M. Bartone, Jr., P.E.
Jay White
WorleyParsons Group Inc.

Research and Development Solutions, LLC.

National Energy Technology Laboratory
www.netl.doe.gov

This page is intentionally left blank

SECTION VI TABLE OF CONTENTS

Section VI Table of Contents ..... *VI-i*

Section VI List of Exhibits ..... *VI-iii*

Terminology ..... *VI-v*

Acknowledgements ..... *VI-vii*

VI.1 Summary *VI-1*

VI.2 System Description and Performance *VI-5*

VI.2.1 System Description **VI-5**

VI.2.2 Heat & Material Balance, Performance Estimates, and Emissions Estimates **VI-9**

VI.3 Plot Plan and Site Layout *VI-41*

VI.4 Solids Handling Systems Descriptions *VI-45*

VI.4.1 Coal Receiving, Storage, and Handling **VI-45**

VI.4.1.1 Coal Receiving and Storage VI-45

VI.4.1.2 Coal Handling and Preparation System VI-45

VI.4.2 Limestone Receiving, Storage, and Handling **VI-46**

VI.4.2.1 Limestone Receiving and Storage VI-46

VI.4.2.2 Limestone Handling and Preparation System VI-47

VI.4.3 Coal/Limestone Gasifier Delivery System **VI-47**

VI.4.4 Slag Handling **VI-54**

VI.5 Gasifier Process Package Description *VI-55*

VI.5.1 Gasifier **VI-55**

VI.5.2 Coal/Limestone Feed System **VI-57**

VI.5.3 Slag Removal System **VI-58**

VI.5.4 Syngas Wash Cooler **VI-58**

VI.5.5 Waste Heat Exchanger (Primary Heat Exchanger) **VI-59**

VI.5.6 Syngas Cooling System **VI-59**

VI.5.7 Gas Liquor Separation and Tar/Oil Reinjection System **VI-59**

VI.6 Syngas Cleanup System Description VI-61
VI.6.1 Rectisol Process Description VI-61
VI.6.2 Claus Process Description VI-63
VI.7 Waste Water Treatment System Description VI-65
VI.8 Process Steam System Description VI-67
VI.8.1 Steam Subsystem VI-67
VI.8.2 Syngas-fired Boiler Subsystem VI-67
VI.9 Flare System Description VI-69
VI.10 Circulating Water System Description VI-71
VI.11 Process Water Supply System VI-73
VI.12 Instrumentation and Control System Description VI-75
VI.13 Electrical System Description VI-77
VI.14 Air Separation Unit Description VI-79
VI.15 Capital and O&M Cost Estimates VI-81
VI.15.1 Cost Estimating Approach VI-81
VI.15.2 Cost Basis and Assumptions VI-82
VI.15.2.1 Capital Cost Basis and Assumptions VI-82
VI.15.2.2 Operating and Maintenance Cost Basis and Assumptions VI-84
VI.15.2.3 Results VI-85
VI.16 Conclusions VI-89
VI.17 Major Equipment List VI-91
VI.17.1 Gasifier Process Package VI-91
VI.17.2 Waste Water Treatment System VI-93
VI.17.3 Rectisol System VI-97
VI.17.4 Claus System VI-104
VI.17.5 Steam System VI-113
VI.17.6 Circulating Water System VI-113
VI.17.7 Coal and Limestone Receiving and Handling Systems VI-114

SECTION VI LIST OF EXHIBITS

Exhibit VI.2-1 Sketch of Major Systems Comprising the Syngas Production Reference Plant VI-8

Exhibit VI.2-2 Syngas Production Reference Plant Estimated Performance Summary VI-10

Exhibit VI.2-3 Gasification and Gas Cooling Conceptual Process Flow Diagram VI-13

Exhibit VI.2-4 Rectisol System Conceptual Process Flow Diagram VI-15

Exhibit VI.2-5 Sulfur Production (Claus) System Conceptual Process Flow Diagram VI-17

Exhibit VI.2-6 Waste Water Treatment System Conceptual Process Flow Diagram VI-19

Exhibit VI.2-7 Steam System Conceptual Process Flow Diagram VI-21

Exhibit VI.2-8 Syngas-fired Boiler Conceptual Process Flow Diagram VI-23

Exhibit VI.2-9 Gasification and Gas Cooling Systems Estimated State Point Compositions and Conditions VI-25

Exhibit VI.2-10 Rectisol System Estimated State Point Compositions and Conditions VI-29

Exhibit VI.2-11 Sulfur Production (Claus) System Estimated State Point Compositions and Conditions VI-33

Exhibit VI.2-12 Waste Water Treatment System Estimated State Point Compositions and Conditions VI-35

Exhibit VI.2-13 Steam System Estimated State Point Compositions and Conditions VI-37

Exhibit VI.2-14 Syngas-fired Boiler System Estimated State Point Compositions and Conditions VI-39

Exhibit VI.3-1 Conceptual General Equipment Arrangement and Plot Plan for the Syngas Production Reference Plant VI-42

Exhibit VI.3-2 Conceptual Elevation of Gasification Process Installation VI-43

Exhibit VI.4-1 Simplified Process Flow Diagram of Coal and Limestone Receiving, Storage, and Handling System.....VI-49

Exhibit VI.4-2 Coal and Limestone Storage and Handling Systems General Arrangement.....VI-50

Exhibit VI.4-3 Example of Snake Sandwich High Angle Conveyor by Dos Santos International for Feeding Coal Silos.....VI-51

Exhibit VI.4-4 Example of Snake Sandwich High Angle Conveyor by Dos Santos International for Feeding Limestone Silo VI-52

Exhibit VI.4-5 Example of Snake Sandwich High Angle Conveyor by Dos Santos International for Feeding Coal/Limestone to Gasifier Hopper.....VI-53

Exhibit VI.5-1 Schematic Cross-Section of Gasifier VI-56

Exhibit VI.10-1 Estimated Circulated Cooling Water Requirements.....VI-71

Exhibit VI.11-1 Estimated Process Makeup Water Requirements.....VI-73

Exhibit VI.13-1 Estimated Electric Power Requirements Summary.....VI-77

Exhibit VI.15-1 Summary of Capital Cost Estimate VI-86

Exhibit VI.15-2 Estimated Annual O&M Costs.....VI-87

TERMINOLOGY

ASU ..... Air separation unit
BEC ..... Bare erected cost
BGL ..... British Gas Lurgi
BTX ..... Benzene, Toluene, and Xylene
Btu ..... British thermal unit
ºC ..... Degrees Celsius
CC ..... Combined cycle
CO_2 ..... Carbon dioxide
CT, GT ..... Combustion turbine, synonym for gas turbine
DME ..... Dimethyl ether
DOE ..... Department of Energy (United States)
DRD ..... Design Requirements Document
EIA ..... Energy Information Administration
EPA ..... Environmental Protection Agency
°F ..... degrees Fahrenheit
FOF ..... Forced outage factor
FOR ..... Forced outage rate
fps ..... Feet per second
GE ..... General Electric
GT, CT ..... Gas turbine, synonym for combustion turbine
GWh ..... Gigawatt-hour
Hg ..... Mercury
HHV ..... Higher Heating Value
HRSG ..... Heat recovery steam generator
ID ..... Induced Draft (fan)
IDC ..... Interest during construction
IGCC ..... Integrated Gasification Combined Cycle
kW, kWe ..... Kilowatt electric
kWt ..... Kilowatt thermal
KWh ..... Kilowatt-hour
LHV ..... Lower heaving value
MDEA ..... Methyl diethanol amine
MIBK ..... Methyl Isobutyl Ketone
MW, MWe ..... Megawatt electrical
MW_t ..... Megawatt thermal
MWh ..... Megawatt-hour
NETL ..... DOE National Energy Technology Laboratory
NOx ..... Nitrous oxides
O_2 ..... Oxygen
O&M ..... Operating and Maintenance
P&W ..... Pratt & Whitney
Part. ..... Particulate emissions
POX ..... Partial Oxidation
psia ..... Pound/square inch (14.696 psi = 1 atm)
Q ..... Heat
QGESS ..... DOE/NETL Quality Guidelines for Energy System Studies
S ..... Sulfur content of fuel
scf ..... Standard cubic feet (based on 14.7psia/60°F)
SNCR ..... Selective non-catalytic reduction (for NOx control)
SNG ..... Substitute (Synthetic) Natural Gas
SO_2 ..... Sulfur dioxide
ST ..... Steam turbine
Syngas ..... Synthetic gas
T&D ..... Transmission and distribution (electrical)
t ..... Short ton (2,000 lbs)
TG ..... Turbo-generator, (turbine-generator)
t/h ..... Ton/hour
ton ..... short ton, (2000 lbs)
t/h,tph ..... Ton per hour
t/y,tpy ..... Ton per year
TPC ..... Total plant cost
US, U.S. ..... United States
USEPA ..... United States Environmental Protection Agency

USD, US$.....The United States Dollar

USDOE.....United States Department of Energy

y, yr..... Year

ACKNOWLEDGEMENTS

This work was performed under DOE/NETL Contract No. DE-AM26-04NT41817 with Research and Development Solutions (RDS), LLC. WorleyParsons Group Inc. performed the work under a subcontract agreement with RDS, Subcontract No. 41817M2943.

The NETL Project Manager for this activity was Jeffrey Hoffmann.

The authors acknowledge the contributions of Victor Shellhorse and Bill Jones of Allied Syngas Corporation who were of considerable assistance in describing the characteristics of the British Gas Lurgi gasifier.

This page intentionally left blank

VI.1 SUMMARY

A feasibility study was performed to evaluate the technical and economic viability of coal-derived syngas and substitute natural gas (SNG) refueling of U.S. industries. The study includes the development of Reference Plant Conceptual Designs for the following application scenarios:

Case 1 – A coal-derived syngas production plant, based on the BGL 1000 gasifier being marketed in North America by Allied Syngas Corporation, with a nominal gasifier capacity of approximately 1000 million Btu/hr (MMBtu/hr) of synthesis gas.

Case 1A – Illinois #6 Coal as fuel, no hydrogen production

Case 1AH - Illinois #6 Coal as fuel, with hydrogen production

Case 1B – PRB Coal as fuel, no hydrogen production

Case 1BH - PRB Coal as fuel, with hydrogen production

Case 2 – A coal-derived SNG production plant, based on the BGL 1000 gasifier, for distribution through natural gas pipelines.

Case 2A – Illinois #6 Coal as fuel

Case 2B – PRB Coal as fuel

Case 3 – A gas turbine refueling configuration for a nominal 80 to 150 MWe (combined cycle equivalent) based on the Case 1 syngas configuration

Case 3A – Illinois #6 Coal as fuel

Case 3B – PRB Coal as fuel

Case 4 – A gas turbine refueling configuration for a nominal 80 to 150 MWe (combined cycle equivalent) based on the Case 3 SNG configuration

Case 4A – Illinois #6 Coal as fuel

Case 4B – PRB Coal as fuel

As part of this effort, a conceptual design and conceptual level capital and operating and maintenance cost estimates were developed for a Syngas Production Reference Plant (Case 1A), based on a single operating BGL 1000 gasifier, to be used as the basis for the above plant designs. Allied Syngas Corporation and Envirotherm GmbH provided the gasifier performance and composition, temperature, and pressure of the syngas from the gasification process. A developed an model of the gasification process integrated with the major supporting systems was developed using ASPEN Plus™ software, and mass and energy balance calculations were performed using the model. These data were used to define the functional requirements of the systems, performance estimates, and conceptual specifications of end-use equipment.

The Syngas Production Reference Plant conceptual design is based on the requirements defined in the Conceptual Design Requirements Document (DRD) in Section V. The requirements include the following:

- Fuel for the gasifier is Illinois #6 coal. The composition of the coal is defined in the DRD.
- Limestone is used as the flux in the gasifier.
- The gasifier uses an oxidant that contains 99.5% purchased from a third party who owns and operates an air separation unit (ASU) on the site. Nitrogen for purging is also purchased from the third party.
- Electrical power is purchased from a local provider.
- The gasifier will produce a medium-Btu syngas
- A Rectisol process will be used for syngas cleanup.
- Elemental sulfur will be produced as a byproduct.
- The gasifier process package design will be provided by Envirotherm GmbH/Allied Syngas Corporation and will consist of all equipment/systems from the coal/flux feed lock to the inlet of the syngas acid gas removal (AGR) system and the discharge of the slag lock, including the tar/oil separation system and reinjection system.

- The gasifier process package will include a spare gasifier complete with coal/flux feed lock, gasifier, gas wash cooler, slag quench vessel, and slag lock vessel
- Capital cost estimates for the gasifier process will be based on a WorleyParsons' in-house BGL IGCC cost model utilized for previous IGCC evaluations.
- Capital cost estimates for other systems will be based on a combination of WorleyParsons' in-house cost data and budgetary quotes provided by equipment supplies.
- Construction labor costs will be based on Gulf Coast non-union labor rates.

This report describes a conceptual design analysis, as well as conceptual level cost estimates, that are based upon approximate methods. The data developed are not at sufficient depth to be used for design or construction purposes. Cost data are only suited for planning and budget estimation purposes, and are not of sufficient depth of detail to justify major capital investment.

The Reference Syngas Production Plant produces approximately 952 MMBtu/hr of medium Btu (337 Btu/scf) syngas product for export to an industrial customer(s) from approximately 1,118 MMBtu/hr of Illinois #6 coal. The net plant thermal efficiency (as defined in the DOE Quality Guidelines for Energy System Studies for a fuel production plant) is about 74.7%.

The following sections provide descriptions of the major systems and equipment comprising the Syngas Production Reference Plant, estimated performance characteristics, mass and energy balances of the major systems, and capital and operating cost estimates.

This page intentionally left blank

VI.2 SYSTEM DESCRIPTION AND PERFORMANCE

This section contains the system description, heat and mass balances, and performance estimates for the Syngas Production Plant using Illinois #6 coal.

VI.2.1 SYSTEM DESCRIPTION

The system is an industrial size syngas production plant producing approximately 158,700 lb/hr of cleaned syngas with a higher heating value of about 6,290 Btu/lb (337 Btu/scf[a]) and lower heating value of about 5,894 Btu/lb (316 Btu/scf[a]) from Illinois #6 coal. Internal systems use about 7,300 lb/hr of the syngas for steam generation, resulting in a net syngas product of about 151,400 lb/hr. A sketch showing the major processes comprising the system is presented in Exhibit VI.2-1. The system contains the following processes:

- A gasifier process package consisting of an oxygen-fired BGL gasifier producing a medium Btu syngas; coal/limestone feed lock for introducing feedstock into the gasifier; syngas wash cooler and primary heat exchanger for cooling the syngas and removing tars, oils, and particulates from the syngas; gas liquor separation and tar/oil recycle process for removing tars and oils from syngas condensate for reinjection into the gasifier; syngas coolers for decreasing the temperature of the syngas to meet the requirements of the syngas cleanup system; and a slag quench vessel and slag lock for removing slag from the gasifier.
- A spare gasifier with coal/limestone feed lock, gas wash cooler, slag quench vessel, and slag lock vessel.
- A syngas cleanup system consisting of a Rectisol acid gas removal system (AGR) for removal and concentration of acid gases (H_2S and COS) from the syngas to levels allowing industrial users to satisfy environmental criteria, and a Claus

[a] Standard Conditions : 14.7 psia, 60°F

plant for producing elemental sulfur byproduct, from sulfur in the acid gas, for sale to industrial users. The Rectisol AGR system is also used to remove benzene, toluene, and xylene (naphtha-BTX) from the syngas stream for recycle to the gasifier.

- A waste water treatment system for removing contaminants from the liquor prior to recycling the waste water or discharging it to the environment.
- A coal receiving, storage, and delivery system for removing coal from trucks and delivering it to a coal storage area and then to the gasifier process coal feeding system.
- A limestone (flux) receiving, storage, and delivery system for removing limestone from trucks and delivering it to a limestone storage area and then to the gasifier process limestone feeding system.
- Slag handling system for collecting the slag discharged from the slag lock and transporting the slag to a storage and truck loading area.
- An air separation unit (ASU) owned and operated by a third party that provides oxygen and nitrogen to the gasification process.
- A steam system for providing deaerated water to processes and generating steam for the gasification process.
- Circulating water system that provides cooling water to the processes.
- Balance of Plant systems for supporting the gasification process, including:
    - Process water supply system;
    - flare system for combusting syngas during start-up and system upsets;
    - air supply system;
    - natural gas supply system;
    - electrical system;
    - instrumentation and control system; and
    - chemical and byproduct storage.

As discussed in the initial paragraph above, this plant configuration produces approximately 151,400 lb/hr of cleaned syngas with a

higher heating value of about 6,290 Btu/lb (337 Btu/scf[b]) and lower heating value of about 5,894 Btu/lb (316 Btu/scf[a]). The configuration presented here mixes the Rectisol tail gas with the sweet syngas to generate the product syngas described above. As discussed, a portion of this gas is utilized within the process.

An alternative configuration was also evaluated where the tail gas was not mixed with the sweet syngas. In this approach, all of the tail gas was utilized within the process along with a small portion of the sweet syngas. The syngas product from this plant configuration is approximately 135,250 lb/hr with a higher heating value of about 7,062 Btu/lb (353 Btu/scf[c]) and lower heating value of about 6,613 Btu/lb (331 Btu/scf[a]). This approach was also used in other configurations discussed in subsequent sections of this report.

In both configurations, the total heat content of the syngas product is 956 MMBtu/hr. The difference is in the mass flow and composition. For the case presented here, the syngas composition of CO, H_2, and CO_2 is 54%, 29%, and 4%, respectively. For the alternative case the syngas composition would correspond to 58% CO, 32% H_2, and less than 1% CO_2.

[b] Standard Conditions : 14.7 psia, 60°F

[c] Standard Conditions : 14.7 psia, 60°F

Exhibit VI.2-1 Sketch of Major Systems Comprising the Syngas Production Reference Plant

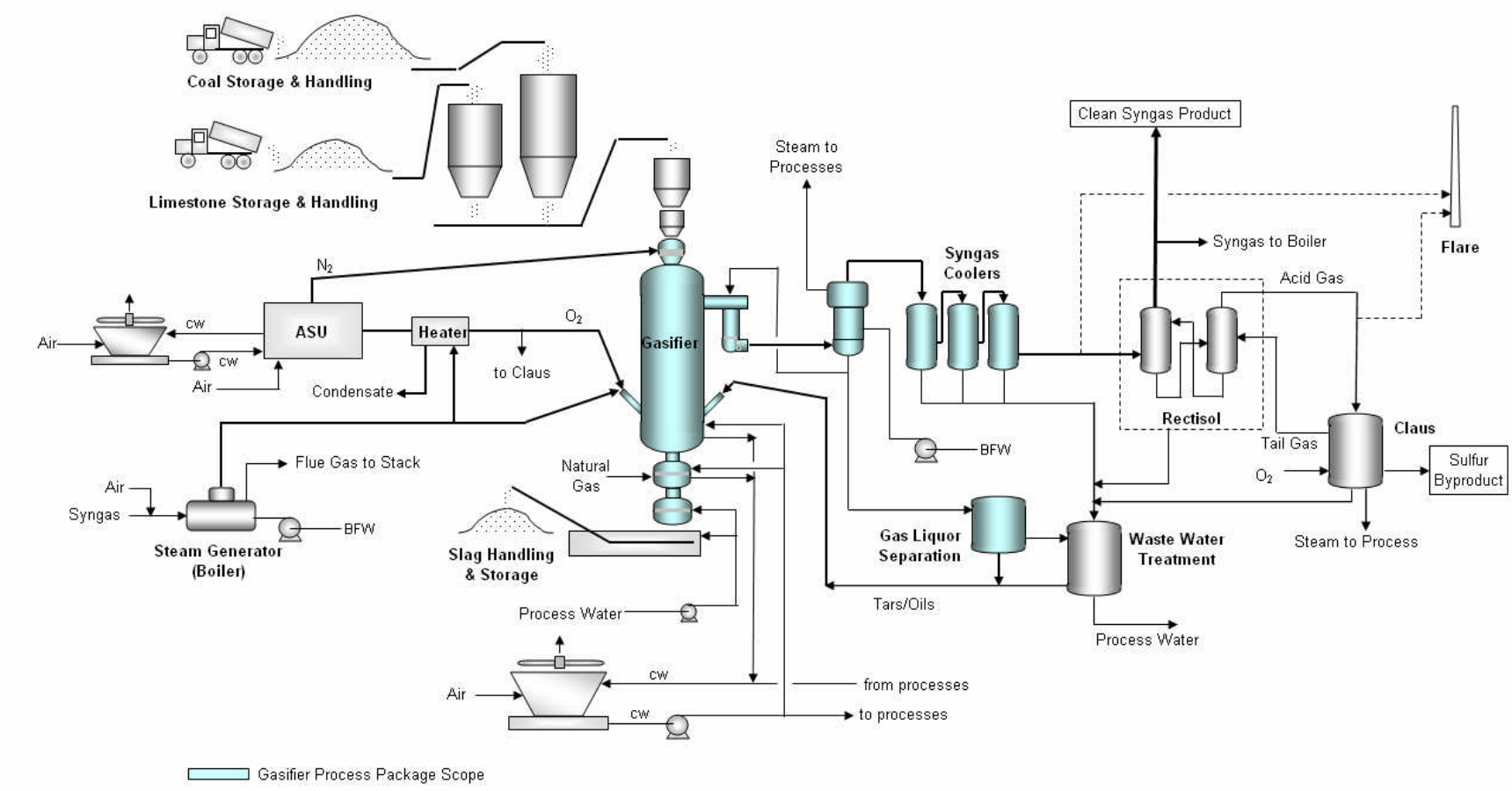

VI.2.2 HEAT & MATERIAL BALANCE, PERFORMANCE ESTIMATES, AND EMISSIONS ESTIMATES

A summary of the estimated performance resulting from heat and mass balance calculations are presented in Exhibit VI.2-2. Conceptual process flow diagrams of the major systems comprising the Syngas Production Reference Plant are shown in Exhibit VI.2-3 through Exhibit VI.2-8. Estimated state point compositions and conditions for flow streams identified with numbers in the process flow diagrams are provided in Exhibit VI.2-9 through Exhibit VI.2-14.

The plant consumes about 95,409 lb/hr (1,118 Btu/hr) of Illinois #6 coal to produce a total of 158,700 lb/hr (about 998 MMBtu/hr) of clean, medium Btu syngas. Therefore, about 89.3% of the energy content of the coal is recovered in the syngas product. About 7,300 lb/hr of the syngas is used internally to produce steam for the gasification process, resulting in about 151,400 lb/hr of syngas with an energy content of about 952 MMBtu/hr available for export to an industrial customer. The auxiliary electrical requirements of the syngas production plant are estimated to be about 5,140 kWe excluding the ASU requirements. The ASU electrical requirements are expected to be about 9,700 kWe. The total syngas production plant thermal efficiency, defined in accordance with the DOE Quality Guidelines for Energy System Studies, is thus about 74.7%. The DOE guidelines define the thermal efficiency of fuel-only systems as the heating value energy of the product fuels (exported syngas in this case) divided by the total heating value energy of all direct and indirect input fuels. The direct fuels in this case are the coal to the gasifier and natural gas to the gasifier slag tap burner. The indirect input fuels are the fuels converted outside the process to produce the electrical power required by the syngas production and ASU plants. In accordance with the DOE guidelines, a fuel energy-to-electrical energy conversion HHV efficiency of 32.8% was used.

About 3,000 lb/hr of elemental sulfur is produced as a co-product. About 13,787 lb/hr of slag is produced by the gasification process that may be sold as a product, depending on site specific factors. However, the Reference Plant evaluation assumes that the slag is sent to offsite non-hazardous waste disposal.

Exhibit VI.2-2 Syngas Production Reference Plant Estimated Performance Summary

Production Figures (average)	
Total Syngas Flow, lb/hr (scfh x 10^6)	158,700 (2.96)
Syngas Higher Heating Value, Btu/lb (Btu/scf)[a]	6,291 (337)
Syngas Lower Heating Value, Btu/lb (Btu/scf)	5,894 (316)
Exported Syngas Flow lb/hr (scfh x 10^6)[b]	151,400 (2.54)
Exported Syngas Energy, MMBtu/hr (HHV)	952
Elemental Sulfur Product, lb/hr	2,999
Slag, lb/hr	13,787
Consumption Figures (average)	
Coal Thermal Input , MMBtu/hr (HHV)[c]	1,118
Coal Feed, lb/hr	95,409
Flux (Limestone) Feed, lb/hr	2,442
Oxygen to Gasifier and Claus Furnace, lb/hr	48,623
Nitrogen for Feed Lock Purge, lb/hr	4,409
Steam to Gasifier[d], lb/hr	29,158
Cooling Makeup Water (Syngas Plant), lb/hr	55,440
Process Makeup Water[e], lb/hr	61,632
Methanol, lb/hr	30
Natural Gas to Slag Tap (ring) burner, lb/hr	140
Aux. Electric Power (Syngas Plant), kWe	5,140
ASU Electric Power, kWe	9,700
ASU Cooling Makeup Water, lb/hr	27,100
Plant Equivalent Efficiency	
Fuel and Power Energy Input[f], MMBtu/hr	1275
Energy in Exported Syngas Product, MMBtu/hr	952
Plant Net Thermal Efficiency[g], %	74.7
Emissions	
Gasification Plant Syngas Fired Boiler	
SO_2 , lb/MMBtu	< 0.003
NOx, lb/MMBtu[h]	< 0.1
Hg, lb/trillionBtu[i]	< 0.001
CO_2, lb/MMBtu	< 225

Note a: Standard Conditions: 14.7 psia, 60°F
Note b: Total syngas from cleanup system minus syngas used in the gasification system processes
Note c: Based on Illinois #6 coal with HHV of 11,714 Btu/lb
Note d: Generated in a fired boiler using tailgas from the processes and portion of syngas produced
Note e: A detailed optimization of water recycling in the plant was not performed. An optimization study may reduce the process water makeup requirement.
Note f: Coal energy plus natural gas energy (to ring burner) plus purchased aux. power and ASU power expressed as thermal energy to utility power generation plant with HHV efficiency of 32.8%.
Note g: Defined in accordance with DOE Quality Guidelines for Energy System Studies as energy in exported syngas product divided by plant energy input as defined in Note e.
Note h: Without post-combustion controls (e.g. SCR).
Note i: Based on Hg content in coal of < 0.12 ppm and 90% or higher removal efficiency.

The annual capacity factor of the Reference Syngas Production Plant, defined as the plant annual syngas production divided by the rated output times 8,760 hours[d], is expected to be about 95% with the inclusion of the spare gasifier. Information published by The Dakota Gasification Company indicates that the Great Plains Synfuels Plant has successfully operated 14 Lurgi gasifiers without a spare while maintaining an annual plant loading as high as 92%.[e] That is, the plant annually produces up to 92% of its rated output capacity. Personnel with experience at the Great Plains Synfuels Plant indicate that corrosion issues in the boiler system, which uses H_2S-rich waste gas from the Rectisol Process as fuel, has historically cost the plant over 2% in availability. The Reference Plant conceptual design for this study sends the H_2S rich gas to a Claus Unit for recovery of sulfur, and uses clean gas from the Rectisol Process as the fuel in the fired boiler. It has also been indicated that because the Great Plains Synfuels Plant has been operating at greater than design capacity, the resulting hydraulic overload of the gas liquor separation system and Phenosolvan system, and its impact on the plant cooling water system, has adversely affected annual plant capacity factor. The incorporation of a dedicated spare gasifier in the Reference Plant is expected to further increase the plant capacity factor over that achieved in the Great Plains Synfuels Plant.

---

[d] Defined in accordance with DOE Quality Guidelines for Energy System Studies

[e] CO_2 Recovery and Sequestration at Dakota Gasification Company. Daren Eliason. 2004 Gasification Technologies Conference. October 4, 2004.

This page intentionally left blank

Exhibit VI.2-3 Gasification and Gas Cooling Conceptual Process Flow Diagram

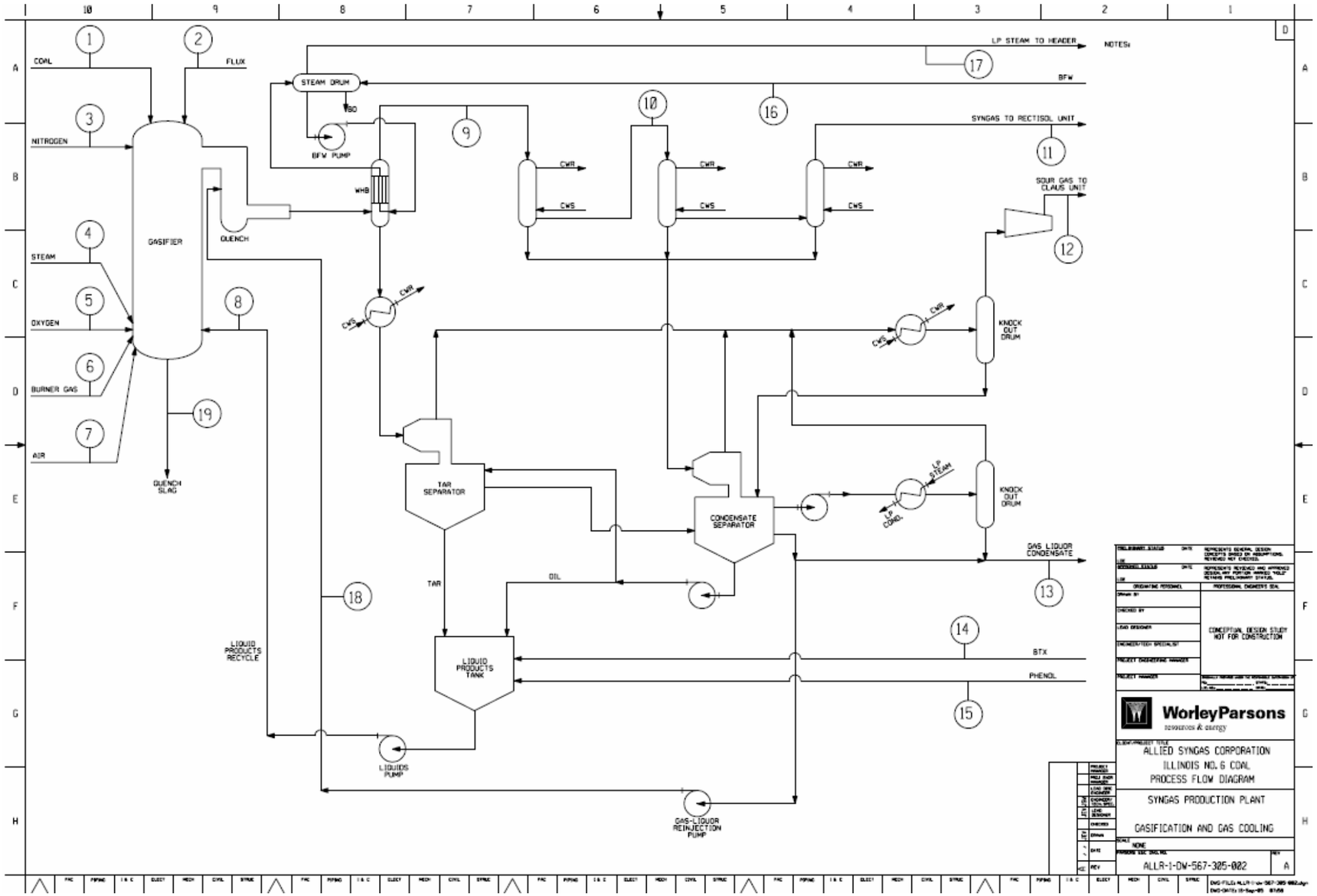

This page intentionally left blank

Exhibit VI.2-4 Rectisol System Conceptual Process Flow Diagram

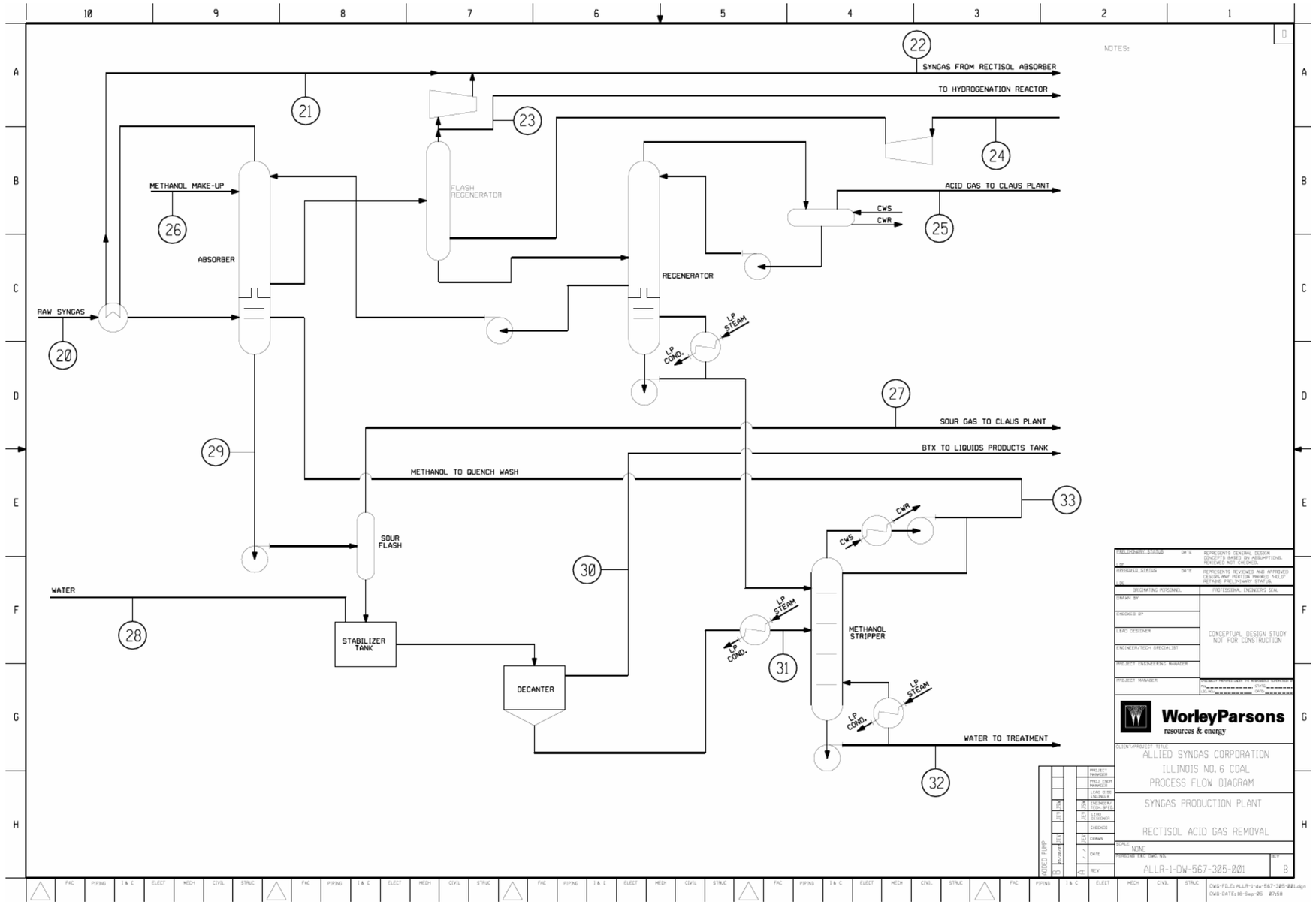

This page intentionally left blank

Exhibit VI.2-5 Sulfur Production (Claus) System Conceptual Process Flow Diagram

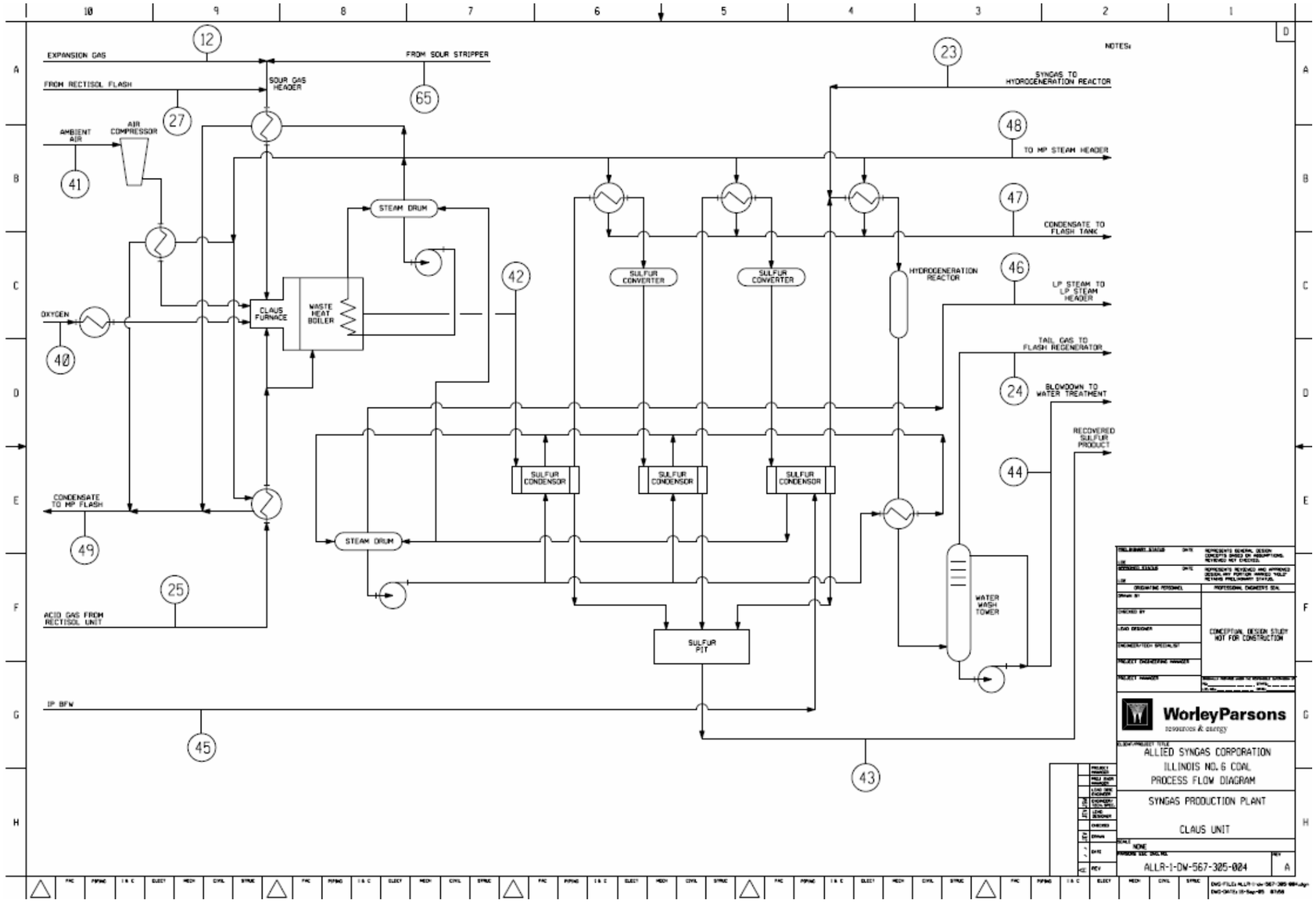

This page intentionally left blank

Exhibit VI.2-6 Waste Water Treatment System Conceptual Process Flow Diagram

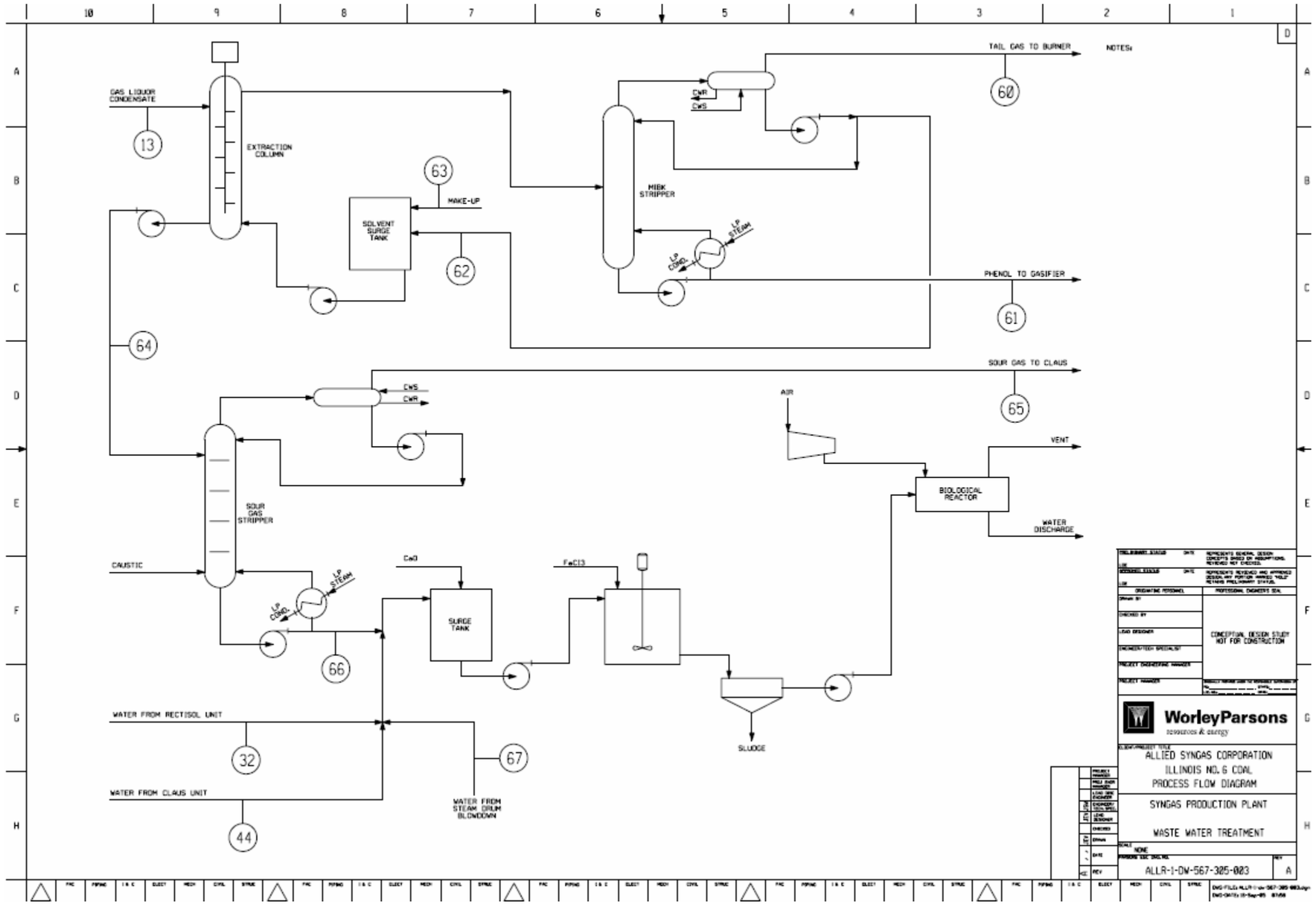

This page intentionally left blank

Exhibit VI.2-7 Steam System Conceptual Process Flow Diagram

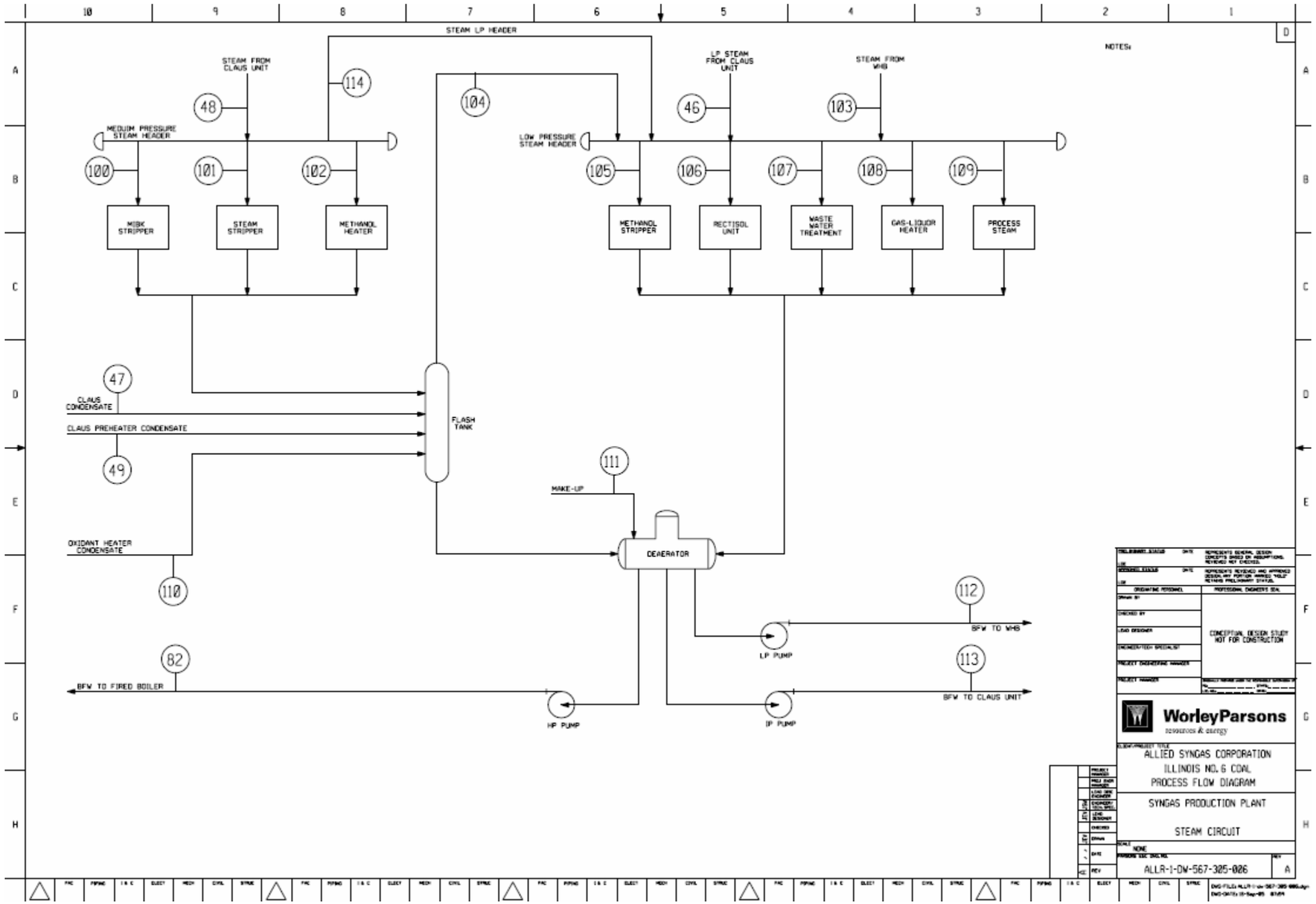

This page intentionally left blank

Exhibit VI.2-8 Syngas-fired Boiler Conceptual Process Flow Diagram

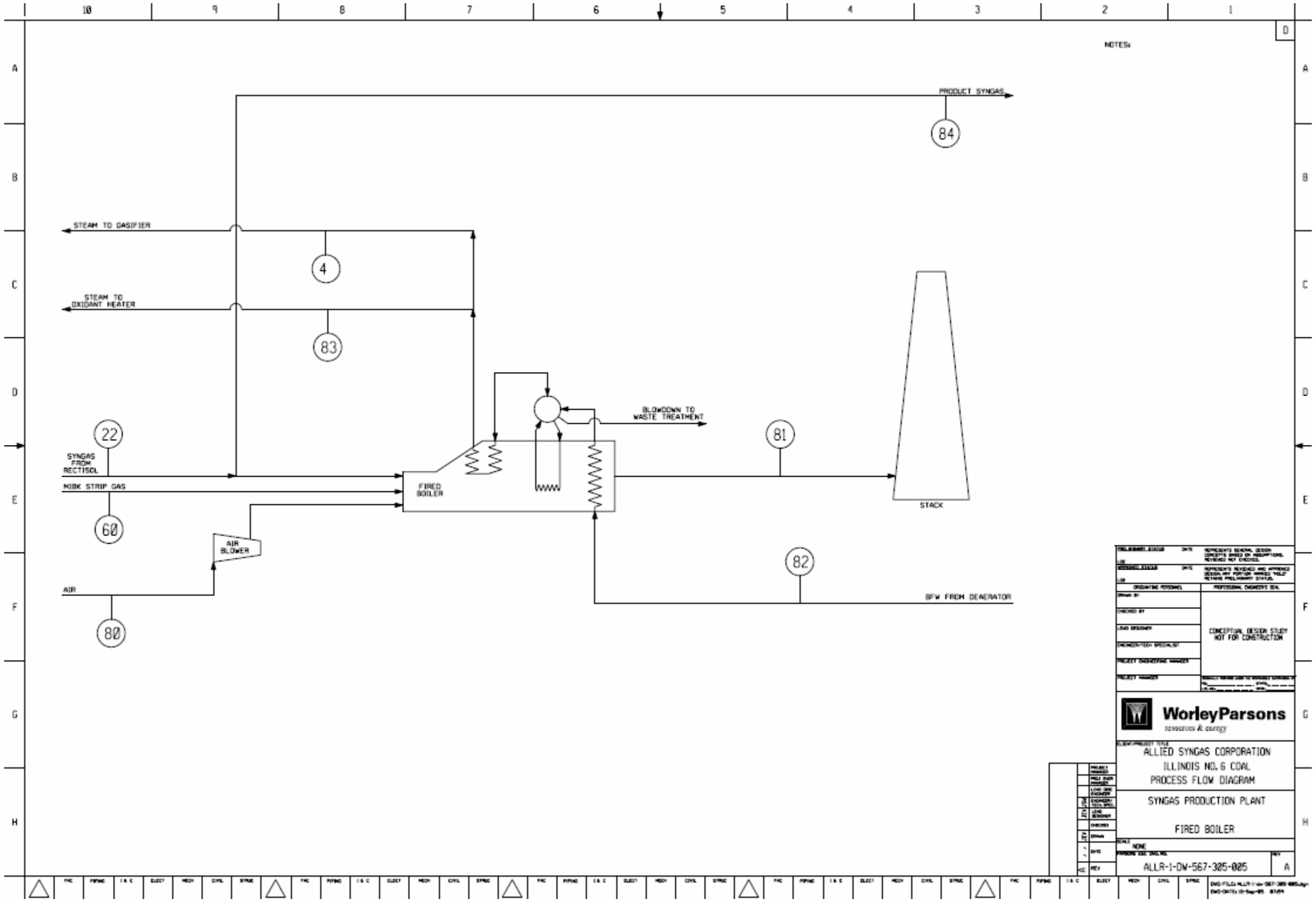

This page intentionally left blank

Exhibit VI.2-9 Gasification and Gas Cooling Systems Estimated State Point Compositions and Conditions

Syngas Option - Gasifier, Gas Cooling, and Gas Liquor Condensate Separation Material Balance

STREAM	1		2		3		4		5		6		7		8		9		10	
Description	Coal to Gasifier		Flux to Gasifier		Purge Nitrogen		Steam to Gasifier		Oxygen to Gasifier		Burner Gas		Burner Air		Liquid Products Recycle		Raw Gas from WHB		Raw Gas	
Flow	lbmol/hr	lb/hr	lbmol/hr	lb/hr	lbmol/hr	lb/hr	lbmol/hr	lb/hr	lbmol/hr	lb/hr	lbmol/hr	lb/hr	lbmol/hr	lb/hr	lbmol/hr	lb/hr	lbmol/hr	lb/hr	lbmol/hr	lb/hr
AR	0	0	0	0	0	0	0	0	0	0	0	0	1.09	43.40	0	0	1.09	43.39	1.09	43.39
BTX	0	0	0	0	0	0	0	0	0	0	0	0	0	0	7.81	719.6	8.01	737.9	8.01	737.9
CH4	0	0	0	0	0	0	0	0	0	0	8.45	135.6	0	0	0	0	458.41	7,354	458.40	7,354
C2H4	0	0	0	0	0	0	0	0	0	0	0.02	0.60	0	0	0	0	3.65	102.4	3.65	102.42
C2H6	0	0	0	0	0	0	0	0	0	0	0	0	0	0	0	0	18.16	546.0	18.16	546.0
C3H6	0	0	0	0	0	0	0	0	0	0	0.02	0.90	0	0	0	0	1.47	61.92	1.47	61.91
C3H8	0	0	0	0	0	0	0	0	0	0	0	0	0	0	0.05	2.07	7.68	338.5	7.68	338.5
C4H8	0	0	0	0	0	0	0	0	0	0	0	0	0	0	0.05	2.81	1.14	63.96	1.14	63.96
C4H10	0	0	0	0	0	0	0	0	0	0	0	0	0	0	0.21	12.10	3.14	182.4	3.14	182.4
CH3OH	0	0	0	0	0	0	0	0	0	0	0	0	0	0	0	0	0.00	0.00	0.00	0.00
CO	0	0	0	0	0	0	0	0	0	0	0	0	0	0	0	0	4,208	117,875	4,208	117,875
CO2	0	0	0	0	0	0	0	0	0	0	0.02	0.76	0	0	0.99	43.57	332.33	14,626	332.27	14,623
COS	0	0	0	0	0	0	0	0	0	0	0	0	0	0	0.06	3.42	4.80	288.4	4.80	288.2
HCN	0	0	0	0	0	0	0	0	0	0	0	0	0	0	0	0	2.23	60.22	2.23	60.17
HCL	0	0	0	0	0	0	0	0	0	0	0	0	0	0	0	0	2.50	91.16	2.50	90.99
H2	0	0	0	0	0	0	0	0	0	0	0	0	0	0	0	0	2,306	4,648	2,306	4,648
H2O	0	0	0	0	0	0	1,618.51	29,158	0	0	0	0	0	0	0.03	0.56	2,468	44,461	331.17	5,966
H2S	0	0	0	0	0	0	0	0	0	0	0	0	0	0	0.46	15.51	89.34	3,045	89.07	3,035
MIBK	0	0	0	0	0	0	0	0	0	0	0	0	0	0	0	0	0.00	0.00	0.00	0.00
N2	0	0	0	0	157.39	4,409	0	0	7.51	210.5	0.08	2.17	84.73	2,374	0	0	287.43	8,052	287.43	8,052
NH3	0	0	0	0	0	0	0	0	0	0	0	0	0	0	0	0	0	0	0	0
O2	0	0	0	0	0	0	0	0	1,495.14	47,841	0	0	22.81	730.0	0	0	0	0	0	0
PHENOL	0	0	0	0	0	0	0	0	0	0	0	0	0	0	1.7	160.0	0	0	0	0
SO2	0	0	0	0	0	0	0	0	0	0	0	0	0	0	0	0	0	0	0	0
Mass Flow, lb/hr																				
Coal	95,409		0		0		0		0		0		0		0		0		0	
Flux	0		2442		0		0		0		0		0		0		0		0	
Oil	0		0		0		0		0		0		0		2099		0		0	
Slag	0		0		0		0		0		0		0		0		0		0	
Sulfur	0		0		0		0		0		0		0		0		0		0	
Tar	0		0		0		0		0		0		0		4902		0		0	
Total Flow lbmol/hr	n/a		n/a		157		1,619		1,503		9		109		n/a		10,203		8,066	
Total Flow lb/hr	95,409		2,442		4,409		29,158		48,053		140		3,147		7,960		202,580		164,070	
Total Flow cuft/hr	n/a		n/a		1,755		38,813		26,564		96		1,212		n/a		245,316		171,122	
Temperature F	60		60		60		680		392		60		60		100		311		208	
Pressure psi	n/a		n/a		500		510		517		500		500		500		340		338	
Vapor Frac	n/a		n/a		1		1		1		1		1		0		1		1	
Liquid Frac	n/a		n/a		0		0		0		0		0		1		0		0	
Enthalpy Btu/lb	n/a		n/a		-118		-5,491		71		-1,959		-4		n/a		-2,530		-1,828	
Density lb/cuft	n/a		n/a		2.5116		0.7512		1.8089		1.4616		2.5973		n/a		0.8258		0.9588	
Average MW	n/a		n/a		28.0135		18.0153		31.9789		16.3016		28.9697		n/a		19.8542		20.3407	

12/28/2005 12:32

This page intentionally left blank

Exhibit VI.2-9 (cont'd) Gasification and Gas Cooling Systems Estimated State Point Compositions and Conditions

Syngas Option - Gasifier, Gas Cooling, and Gas Liquor Condensate Separation Material Balance

STREAM	11		12		13		14		15		16		17		18		19	
Description	Syngas to Rectisol Unit		Sour Gas to Claus Unit		Gas Liquor Condensate		BTX to Gasifier		Phenol to Gasifier		BFW to Steam Drum		LP Steam to Header		Quench Water		Slag	
Flow	lbmol/hr	lb/hr	lbmol/hr	lb/hr	lbmol/hr	lb/hr	lbmol/hr	lb/hr	lbmol/hr	lb/hr	lbmol/hr	lb/hr	lbmol/hr	lb/hr	lbmol/hr	lb/hr	lbmol/hr	lb/hr
AR	1.09	43.39	0.00	0.01	0	0	0	0	0	0	0	0	0	0	0	0	0	0
BTX	8.01	737.9	0	0	0.00	0.19	7.81	719.6	0	0	0	0	0	0	0	0	0	0
CH4	458.39	7354	0.03	0.44	0.03	0.47	0	0	0	0	0	0	0	0	0	0	0	0
C2H4	3.65	102.4	0.00	0.02	0	0	0	0	0	0	0	0	0	0	0	0	0	0
C2H6	18.16	546.0	0.00	0.09	0	0	0	0	0	0	0	0	0	0	0	0	0	0
C3H6	1.47	61.91	0.00	0.01	0	0	0	0	0	0	0	0	0	0	0	0	0	0
C3H8	7.68	338.5	0.00	0.02	0	0	0	2	0	0	0	0	0	0	0	0	0	0
C4H8	1.14	63.96	0.00	0.00	0	0	0	3	0	0	0	0	0	0	0	0	0	0
C4H10	3.14	182.4	0.00	0.00	0	0	0	12	0	0	0	0	0	0	0	0	0	0
CH3OH	0	0	0	0	0	0	0	0	0	0	0	0	0	0	0	0	0	0
CO	4,208.31	117,875	0.08	2.20	0.01	0.24	0	0	0	0	0	0	0	0	0	0	0	0
CO2	332.26	14,622	1.56	68.82	3.65	160.6	0.99	43.51	0	0	0	0	0	0	0	0	0	0
COS	4.80	288.2	0.00	0.14	0.00	0.28	0	3	0	0	0	0	0	0	0	0	0	0
HCN	2.23	60.16	0.00	0.02	0.00	0.08	0	0	0	0	0	0	0	0	0	0	0	0
HCL	0	0	0	0	2.50	91.28	0	0	0	0	0	0	0	0	0	0	0	0
H2	2,305.64	4,648	0.04	0.09	0.02	0.04	0	0	0	0	0	0	0	0	0	0	0	0
H2O	18.52	333.7	0.41	7.45	606.00	10,917	0	1	0	0	1,016.08	18,305	995.76	17,939	3,530.19	63,596	0	0
H2S	89.03	3,034	0.06	2.15	0.45	15.33	0	16	0	0	0	0	0	0	0	0	0	0
MIBK	0	0	0	0	0	0	0	0	0	0	0	0	0	0	0	0	0	0
N2	287.43	8,052	0.01	0.21	0	0	0	0	0	0	0	0	0	0	0	0	0	0
NH3	0	0	0	0	9.14	155.6	0	0	0	0	0	0	0	0	0	0	0	0
O2	0	0	0	0	0	0	0	0	0	0	0	0	0	0	0	0	0	0
PHENOL	0	0	0	0	1.71	160.9	0	0	1.70	159.9	0	0	0	0	0	0	0	0
SO2	0	0	0	0	0	0	0	0	0	0	0	0	0	0	0	0	0	0
Mass Flow, lb/hr																		
Coal	0		0		0		0		0		0		0		0		0	
Flux	0		0		0		0		0		0		0		0		0	
Oil	0		0		0		0		0		0		0		0		0	
Slag	0		0		0		0		0		0		0		0		13787	
Sulfur	0		0		0		0		0		0		0		0		0	
Tar	0		0		0		0		0		0		0		0		0	
Total Flow lbmol/hr	7,751		2		624		10		2		1,016		996		3,530		n/a	
Total Flow lb/hr	158,346		82		11,502		801		160		18,305		17,939		63,597		13,787	
Total Flow cuft/hr	138,213		45		202		15		3		310		104,331		1,101		n/a	
Temperature F	95		95		65		40		316		240		308		100		n/a	
Pressure psi	333		35		25		20		15		150		75		500		n/a	
Vapor Frac	1		1		0		0		0		0		1		0		n/a	
Liquid Frac	0		0		1		1		1		1		0		1		n/a	
Enthalpy Btu/lb	-1,731		-3,840		-6,432		-214		-584		-6,657		-5,685		-6,754		n/a	
Density lb/cuft	1.1457		1.8231		57.0509		54.8956		59.7737		59.1007		18.0153		57.7405		n/a	
Average MW	20.4293		37.0266		18.4475		82.7183		94.1130		18.0153		282.6288		18.0153		n/a	

12/28/2005 12:32

This page intentionally left blank

Exhibit VI.2-10 Rectisol System Estimated State Point Compositions and Conditions

Syngas Option - Rectisol Acid Gas Removal Material Balance

STREAM	20		21		22		23		24		25		26		27	
Description	Raw Syngas to Rectisol Absorber		Syngas Out Rectisol Absorber		Syngas From Rectisol Unit		Flash Gas to Hydrogenation Unit		Tail Gas From Claus Plant		Acid Gas to Claus Plant		Methanol Make-Up		Sour Gas to Claus Plant	
Flow	lbmol/hr	lb/hr	lbmol/hr	lb/hr	lbmol/hr	lb/hr	lbmol/hr	lb/hr	lbmol/hr	lb/hr	lbmol/hr	lb/hr	lbmol/hr	lb/hr	lbmol/hr	lb/hr
AR	1.09	43.39	2.91	116.3	2.99	119.6	0.00	0.06	1.91	76.26	0.00	0.00	0.00	0.00	0.00	0.01
BTX	8.01	737.9	0.12	10.94	0.12	10.94	0.00	0.00	0.00	0.00	0.04	3.65	0.00	0.00	0.04	4.11
CH4	458.39	7,354	421.51	6,762	457.54	7,340	0.61	9.85	0.03	0.53	0.00	0.00	0.00	0.00	0.27	4.30
C2H4	3.65	102.4	1.97	55.16	3.61	101.4	0.03	0.79	0.01	0.18	0.00	0.00	0.00	0.00	0.02	0.44
C2H6	18.16	546.0	9.93	298.5	17.91	538.6	0.14	4.09	0.03	0.96	0.00	0.00	0.00	0.00	0.14	4.12
C3H6	1.47	61.91	0.20	8.39	1.40	59.06	0.02	0.86	0.00	0.20	0.00	0.00	0.00	0.00	0.04	1.87
C3H8	7.68	338.5	3.82	168.58	7.29	321.6	0.06	2.61	0.01	0.61	0.00	0.00	0.00	0.00	0.30	13.12
C4H8	1.14	63.96	0.01	0.5	0.94	52.77	0.02	0.89	0.00	0.21	0.00	0.00	0.00	0.00	0.13	7.20
C4H10	3.14	182.4	0.19	11.13	2.48	144.2	0.04	2.27	0.01	0.53	0.00	0.00	0.00	0.00	0.45	26.37
CH3OH	0.00	0.00	0.00	0.00	0.00	0.00	0.00	0.00	0.00	0.00	1.41	45.28	1.76	56.49	0.01	0.32
CO	4,208.31	117,875	4,137.93	115,903	4,221.14	118,234	1.42	39.69	23.53	659.0	8.46	237.0	0.00	0.00	0.82	23.00
CO2	332.26	14,622	18.92	832.5	335.11	14,748	5.39	237.0	314.99	13,863	290.05	12,765	0.00	0.00	15.71	691.3
COS	4.80	288.2	0.00	0.00	0.02	1.32	0.00	0.02	0.57	34.02	5.19	311.7	0.00	0.00	0.11	6.32
HCN	2.23	60.16	0.00	0.00	0.00	0.00	0.00	0.00	0.00	0.00	0.00	0.08	0.00	0.00	2.22	60.05
HCL	0.00	0.00	0.00	0.00	0.00	0.00	0.00	0.00	0.00	0.00	0.00	0.00	0.00	0.00	0.00	0.00
H2	2,305.64	4,648	2,299.16	4,635	2,303.70	4,644	0.08	0.16	0.46	0.93	2.31	4.65	0.00	0.00	0.02	0.04
H2O	18.40	331.47	0.00	0.00	0.00	0.00	0.00	0.00	46.62	839.8	46.65	840.3	0.00	0.00	0.01	0.21
H2S	89.03	3,034	0.00	0.00	0.02	0.76	0.00	0.01	6.32	215.6	94.08	3,206	0.00	0.00	0.73	24.89
MIBK	0.00	0.00	0.00	0.00	0.00	0.00	0.00	0.00	0.00	0.00	0.00	0.00	0.00	0.00	0.00	0.00
N2	287.43	8,052	436.38	12,225	442.04	12,383	0.10	2.70	155.20	4,348	0.44	12.40	0.00	0.00	0.05	1.42
NH3	0.04	0.68	0.00	0.00	0.00	0.00	0.00	0.00	0.00	0.00	0.00	0.00	0.00	0.00	0.00	0.00
O2	0.00	0.00	0.00	0.00	0.00	0.00	0.00	0.00	0.00	0.00	0.00	0.00	0.00	0.00	0.00	0.00
PHENOL	0.00	0.00	0.00	0.00	0.00	0.00	0.00	0.00	0.00	0.00	0.00	0.00	0.00	0.00	0.00	0.00
SO2	0.00	0.00	0.00	0.00	0.00	0.00	0.00	0.00	0.00	0.00	0.00	0.00	0.00	0.00	0.00	0.00
Mass Flow, lb/hr																
Coal	0		0		0		0		0		0		0		0	
Flux	0		0		0		0		0		0		0		0	
Slag	0		0		0		0		0		0		0		0	
Sulfur	0		0		0		0		0		0		0		0	
Total Flow lbmol/hr	7,751		7,333		7,796		8		549		449		2		21	
Total Flow lb/hr	158,343		141,029		158,701		301		20,039		17,427		56		869	
Total Flow cuft/hr	136,164		143,080		161,722		2,144		9,035		78,658		1		2,483	
Temperature F	95		80		114		50		116		98		140		90	
Pressure psi	333		297		297		20		16		31		50		35	
Vapor Frac	1		1		1		1		1		1		0		1	
Liquid Frac	0		0		0		0		0		0		1		0	
Enthalpy Btu/lb	-1,731		-1,517		-1,709		-3,352		-2,953		-3,228		-3,195		-3,083	
Density lb/cuft	1.146		0.986		0.981		0.140		0.090		0.222		47.109		0.350	
Average MW	20.429		19.232		20.356		38.147		36.455		38.845		32.042		41.239	

12/28/2005 12:37

This page intentionally left blank

Exhibit VI.2-10 (Cont'd) Rectisol System Estimated State Point Compositions and Conditions

Syngas Option - Rectisol Acid Gas Removal Material Balance

STREAM	28		29		30		31		32		33	
Description	Water to Stabilizer Tank		Pre-Wash From Rectisol Absorber		BTX to Liquid Products Tank		Methanol to Stripper		Methanol Stripper Bottoms		Pre-Wash to Rectisol Absorber	
Flow	lbmol/hr	lb/hr	lbmol/hr	lb/hr	lbmol/hr	lb/hr	lbmol/hr	lb/hr	lbmol/hr	lb/hr	lbmol/hr	lb/hr
AR	0.00	0.00	0.00	0.01	0.00	0.00	0.00	0.00	0.00	0.00	0.00	0.00
BTX	0.00	0.00	7.85	723.3	7.81	719.2	0.00	0.00	0.00	0.00	0.00	0.00
CH4	0.00	0.00	0.27	4.32	0.00	0.01	0.00	0.00	0.00	0.00	0.00	0.00
C2H4	0.00	0.00	0.02	0.45	0.00	0.01	0.00	0.00	0.00	0.00	0.00	0.00
C2H6	0.00	0.00	0.14	4.29	0.01	0.17	0.00	0.00	0.00	0.00	0.00	0.00
C3H6	0.00	0.00	0.05	2.19	0.01	0.33	0.00	0.00	0.00	0.00	0.00	0.00
C3H8	0.00	0.00	0.34	14.92	0.04	1.83	0.00	0.00	0.00	0.00	0.00	0.00
C4H8	0.00	0.00	0.19	10.51	0.06	3.35	0.00	0.00	0.00	0.00	0.00	0.00
C4H10	0.00	0.00	0.63	36.44	0.18	10.21	0.00	0.00	0.00	0.00	0.00	0.00
CH3OH	0.00	0.00	16.59	531.5	0.02	0.53	16.56	530.6	0.50	16.12	17.95	575.1
CO	0.00	0.00	0.82	23.01	0.00	0.01	0.00	0.00	0.00	0.00	0.00	0.00
CO2	0.00	0.00	16.71	735.2	1.00	44.05	0.00	0.00	0.00	0.00	0.00	0.00
COS	0.00	0.00	0.15	9.22	0.05	2.92	0.00	0.00	0.00	0.00	0.00	0.00
HCN	0.00	0.00	0.00	0.04	0.00	0.04	0.00	0.00	0.00	0.00	0.00	0.00
HCL	0.00	0.00	0.00	0.00	0.00	0.00	0.00	0.00	0.00	0.00	0.00	0.00
H2	0.00	0.00	0.02	0.04	0.00	0.00	0.00	0.00	0.00	0.00	0.00	0.00
H2O	15.00	270.2	18.50	333.2	0.03	0.60	33.33	600.4	33.19	597.9	0.14	2.48
H2S	0.00	0.00	1.25	42.71	0.53	17.91	0.00	0.00	0.00	0.00	0.00	0.00
MIBK	0.00	0.00	0.00	0.00	0.00	0.00	0.00	0.00	0.00	0.00	0.00	0.00
N2	0.00	0.00	0.05	1.42	0.00	0.00	0.00	0.00	0.00	0.00	0.00	0.00
NH3	0.00	0.00	0.00	0.00	0.00	0.00	0.00	0.00	0.00	0.00	0.00	0.00
O2	0.00	0.00	0.00	0.00	0.00	0.00	0.00	0.00	0.00	0.00	0.00	0.00
PHENOL	0.00	0.00	0.00	0.00	0.00	0.00	0.00	0.00	0.00	0.00	0.00	0.00
SO2	0.00	0.00	0.00	0.00	0.00	0.00	0.00	0.00	0.00	0.00	0.00	0.00
Mass Flow, lb/hr												
Coal	0		0		0		0		0		0	
Flux	0		0		0		0		0		0	
Slag	0		0		0		0		0		0	
Sulfur	0		0		0		0		0		0	
Total Flow lbmol/hr	15		63		10		50		34		18	
Total Flow lb/hr	270		2,473		801		1,131		614		578	
Total Flow cuft/hr	4		41		15		21		11		13	
Temperature F	100		-5		40		135		280		205	
Pressure psi	20		40		20		55		52		48	
Vapor Frac	0		0		0		0		0		0	
Liquid Frac	1		1		1		1		1		1	
Enthalpy Btu/lb	-6,842		-2,949		-215		-5,119		-6,565		-3,150	
Density lb/cuft	61.249		60.346		54.925		52.950		54.215		44.126	
Average MW	18.015		38.932		82.391		22.672		18.225		31.935	

12/28/2005 12:37

This page intentionally left blank

Exhibit VI.2-11 Sulfur Production (Claus) System Estimated State Point Compositions and Conditions

Syngas Option - Claus Unit Material Balance

STREAM	40		41		42		43		44		45		46		47		48		49	
Description	Oxygen to Claus Furnace		Air to Claus Furnace		Claus Gas Out WHB		Sulfur Product		Blowdown to Water Treatment		IP BFW from Deaerator		LP Steam to LP Steam Header		Condensate to Flash Tank		MP Steam to MP Steam Header		Condensate to Flash Tank	
Flow	lbmol/hr	lb/hr	lbmol/hr	lb/hr	lbmol/hr	lb/hr	lbmol/hr	lb/hr	lbmol/hr	lb/hr	lbmol/hr	lb/hr	lbmol/hr	lb/hr	lbmol/hr	lb/hr	lbmol/hr	lb/hr	lbmol/hr	lb/hr
AR	0	0	1.91	76.10	1.87	74.79	0	0	0.00	0.00	0	0	0	0	0	0	0	0	0	0
BTX	0	0	0	0	0.11	9.79	0	0	0	0	0	0	0	0	0	0	0	0	0	0
CH4	0	0	0	0	0	0	0	0	0.00	0.00	0	0	0	0	0	0	0	0	0	0
C2H4	0	0	0	0	0	0	0	0	0.00	0.00	0	0	0	0	0	0	0	0	0	0
C2H6	0	0	0	0	0	0	0	0	0.00	0.00	0	0	0	0	0	0	0	0	0	0
C3H6	0	0	0	0	0	0	0	0	0.00	0.00	0	0	0	0	0	0	0	0	0	0
C3H8	0	0	0	0	0	0	0	0	0.00	0.00	0	0	0	0	0	0	0	0	0	0
C4H8	0	0	0	0	0	0	0	0	0.00	0.00	0	0	0	0	0	0	0	0	0	0
C4H10	0	0	0	0	0	0	0	0	0.00	0.00	0	0	0	0	0	0	0	0	0	0
CH3OH	0	0	0	0	0.79	25.32	0	0	0	0	0	0	0	0	0	0	0	0	0	0
CO	0	0	0	0	20.45	572.7	0	0	0.00	0.00	0	0	0	0	0	0	0	0	0	0
CO2	0	0	0	0	297.99	13,114	0	0	0.00	0.06	0	0	0	0	0	0	0	0	0	0
COS	0	0	0	0	4.00	240.5	0	0	0.00	0.00	0	0	0	0	0	0	0	0	0	0
HCN	0	0	0	0	0.00	0.04	0.00	0.05	0	0	0	0	0	0	0	0	0	0	0	0
HCL	0	0	0	0	0	0	0	0	0	0	0	0	0	0	0	0	0	0	0	0
H2	0	0	0	0	7.04	14.20	0	0	0.00	0.00	0	0	0	0	0	0	0	0	0	0
H2O	0	0	0	0	152.09	2,740	0	0	134.84	2,429	732.90	13,203	259.61	4,677	163.87	2,952	84.78	1,527	224.36	4,042
H2S	0	0	0	0	19.90	678.3	0	0	0.00	0.03	0	0	0	0	0	0	0	0	0	0
MIBK	0	0	0	0	0	0	0	0	0	0	0	0	0	0	0	0	0	0	0	0
N2	0.18	5.00	148.60	4,163	153.39	4,297	0	0	0.00	0.00	0	0	0	0	0	0	0	0	0	0
NH3	0	0	0	0	0	0	0	0	0	0	0	0	0	0	0	0	0	0	0	0
O2	17.66	565.0	40.01	1,280	0.00	0.00	0	0	0.00	0.00	0	0	0	0	0	0	0	0	0	0
PHENOL	0	0	0	0	0	0	0	0	0	0	0	0	0	0	0	0	0	0	0	0
SO2	0	0	0	0	17.78	1,139	0	0	0	0	0	0	0	0	0	0	0	0	0	0
S2	0	0	0	0	0.13	8.58	0	0	0.00	0.00	0	0	0	0	0	0	0	0	0	0
S6	0	0	0	0	2.34	450.1	0	0	0.00	0.00	0	0	0	0	0	0	0	0	0	0
S8	0	0	0	0	4.52	1,160	11.69	2,998	0.00	0.06	0	0	0	0	0	0	0	0	0	0
Total Flow lbmol/hr	18		191		697		12		135		733		260		164		85		224	
Total Flow lb/hr	570		5,519		25,154		2,999		2,429		13,203		4,677		2,952		1,527		4,042	
Total Flow cuft/hr	3,501		72,226		294,159		10		40		228		30,122		64		2,826		77	
Temperature F	90		60		650		311		116		242		308		494		403		470	
Pressure psi	30		15		28		25		16		841		75		645		250		655	
Vapor Frac	1.0		1.0		1.0		0.0		0.0		0.0		1.0		0.0		1.0		0.0	
Liquid Frac	0.0		0.0		0.0		1.0		1.0		1.0		0.0		1.0		0.0		1.0	
Enthalpy Btu/lb	3		-4		-2,672		53		-6,824		-6,655		-5,687		-6,386		-5,664		-6,413	
Density lb/cuft	0.16		0.08		0.00		1.23		60.70		59.22		0.17		49.26		0.54		50.55	
Average MW	31.96		28.97		0.09		314.36		18.02		18		18.02		18.02		18.02		18.02	

12/28/2005 12:41

This page intentionally left blank

Exhibit VI.2-12 Waste Water Treatment System Estimated State Point Compositions and Conditions

Syngas Option - Waste Water Treatment Material Balance

STREAM	60		61		62		63		64		65		66		67	
Description	Tail Gas to Fired Boiler		Recovered Phenol to Gasifier		MIBK Recycle		MIBK Make-Up		De-phenolated Condensate to Stripper		Sour Gas to Claus		Condensate to Metals Treating		Steam Drum Blowdown	
Flow	lbmol/hr	lb/hr	lbmol/hr	lb/hr	lbmol/hr	lb/hr	lbmol/hr	lb/hr	lbmol/hr	lb/hr	lbmol/hr	lb/hr	lbmol/hr	lb/hr	lbmol/hr	lb/hr
AR	0	0	0	0	0	0	0	0	0	0	0	0	0	0	0	0
BTX	0.00	0.00	0.00	0.00	0.00	0.19	0	0	0.00	0.00	0	0	0	0	0	0
CH4	0.02	0.39	0.00	0.00	0.01	0.09	0	0	0.00	0.00	0	0	0	0	0	0
C2H4	0	0	0	0	0	0	0	0	0	0	0	0	0	0	0	0
C2H6	0	0	0	0	0	0	0	0	0	0	0	0	0	0	0	0
C3H6	0	0	0	0	0	0	0	0	0	0	0	0	0	0	0	0
C3H8	0	0	0	0	0	0	0	0	0	0	0	0	0	0	0	0
C4H8	0	0	0	0	0	0	0	0	0	0	0	0	0	0	0	0
C4H10	0	0	0	0	0	0	0	0	0	0	0	0	0	0	0	0
CH3OH	0	0	0	0	0	0	0	0	0	0	0	0	0	0	0	0
CO	0	0	0	0	0	0	0	0	0.01	0.24	0.01	0.24	0	0	0	0
CO2	0	0	0	0	0	0	0	0	3.65	160.6	3.65	160.6	0	0	0	0
COS	0	0	0	0	0	0	0	0	0.00	0.28	0.00	0.28	0	0	0	0
HCN	0	0	0	0	0	0	0	0	0.00	0.08	0.00	0.08	0	0	0	0
HCL	0	0	0	0	0	0	0	0	2.50	91.28	0	0	2.50	91.28	0	0
H2	0	0	0	0	0	0	0	0	0.02	0.04	0.02	0.04	0	0	0	0
H2O	0.05	0.92	0.00	0.00	0.47	8.50	0	0	605.47	10,908	19.55	352.1	585.93	10,555	74.66	1,345
H2S	0	0	0	0	0	0	0	0	0.45	15.33	0.45	15.33	0	0	0	0
MIBK	0.10	10.36	0.00	0.00	11.82	1,184	0.01	0.70	0.00	0.00	0.00	0.00	0	0	0	0
N2	0	0	0	0	0	0	0	0	0	0	0	0	0	0	0	0
NH3	0.01	0.18	0.00	0.00	0.02	0.29	0	0	9.11	155.1	9.09	154.8	0.02	0.31	0	0
O2	0	0	0	0	0	0	0	0	0	0	0	0	0	0	0	0
PHENOL	0.00	0.00	1.70	160.2	0.01	0.58	0	0	0.00	0.00	0.00	0.00	0	0	0	0
SO2	0	0	0	0	0	0	0	0	0	0	0	0	0	0	0	0
Total Flow lbmol/hr	0.19		1.70		12.33		0.01		621.22		32.77		588.45		74.66	
Total Flow lb/hr	11.96		160.24		1,194.00		0.70		11,330.72		683.51		10,647.21		1,345.00	
Total Flow cuft/hr	89.81		2.68		33.80		0.01		2,724.15		3,874.17		1,725.09		9,614.52	
Temperature F	210		313		210		100		69		210		246		459	
Pressure psi	14.9		15.0		15.0		25.0		15.0		35.0		38.0		75.0	
Vapor Frac	1		0		0		0		0		1		0		1	
Liquid Frac	0		1		1		1		1		0		1		0	
Enthalpy Btu/lb	-1,545		-585		-1,367		-1,388		-6,710		-4,450		-6,625		-5,605	
Density lb/cuft	0.1332		59.8696		35.3251		48.7603		4.1594		0.1764		6.1720		0.1399	
Average MW	62.8262		94.1130		96.8594		100.1607		18.2395		20.8571		18.0937		18.0153	

12/28/2005 12:43

This page intentionally left blank

Exhibit VI.2-13 Steam System Estimated State Point Compositions and Conditions

Syngas Option - Steam System Material Balance

STREAM	100	101	102	103	104	105	106	107	108	109	110	111	112	113	114
Description	Steam to MIBK Stripper	Steam to Steam Stripper	Steam to Methanol Heater	LP Steam from WHB	Flash Tank Overheads	Steam to Methanol Stripper	Steam to Rectisol Unit	Steam to Waste Water Treatment	Steam to Gas/Liquor Heater	Process Steam	Condensate from Oxidant Heater	Make-Up	BFW to LP Steam Drum	BFW to Claus Unit	MP Steam to LP Header
H2O Mass Flow, lb/hr	486	470	101	17,939	2,272	2,190	14,797	3,305	1,611	3,453	3,796	30,174	18,305	13,203	470
Total Flow lbmol/hr	26	26	6	996	126	121	821	183	89	192	211	1,675	1,016	733	26
Total Flow lb/hr	486	470	101	17,939	2,272	2,190	14,797	3,305	1,611	3,453	3,796	30,174	18,305	13,203	470
Total Flow cuft/hr	899	870	187	104,330	13,214	12,735	86,003	19,209	9,368	20,072	75	484	310	223	870
Temperature F	403	403	403	308	308	308	308	308	308	308	465	60	240	242	403
Pressure psi	250	250	250	75	75	75	75	75	75	75	490	50	150	841	250
Vapor Frac	1.0	1.0	1.0	1.0	1.0	1.0	1.0	1.0	1.0	1.0	0.0	0.0	0.0	0.0	1
Liquid Frac	0.0	0.0	0.0	0.0	0.0	0.0	0.0	0.0	0.0	0.0	1.0	1.0	1.0	1.0	0
Enthalpy Btu/lb	-5,664	-5,664	-5,664	-5,685	-5,685	-5,685	-5,685	-5,685	-5,685	-5,685	-6,419	-6,838	-6,657	-6,655	-5664
Density lb/cuft	0.5404	0.5404	0.5404	0.1719	0.1719	0.1721	0.1721	0.1721	0.1721	0.1721	50.7432	62.3811	59.1007	59.2168	0.5404
Average MW	18.0153	18.0153	18.0153	18.0153	18.0153	18.0153	18.0153	18.0153	18.0153	18.0153	18.0153	18.0153	18.0153	18.0153	18.0153

12/28/05 12:30 PM

This page intentionally left blank

Exhibit VI.2-14 Syngas-fired Boiler System Estimated State Point Compositions and Conditions

Syngas Option - Fired Boiler Material Balance

STREAM	80		81		82		83		84	
Description	Air to Fired Boiler		Flue Gas to Stack		BFW from Deaerator		Steam to Oxidant Heater		Product Syngas	
Flow	lbmol/hr	lb/hr	lbmol/hr	lb/hr	lbmol/hr	lb/hr	lbmol/hr	lb/hr	lbmol/hr	lb/hr
AR	29	1,163	29	1,169	0	0	0	0	2.86	114
BTX	0	0	0	1	0	0	0	0	0.11	10.99
CH4	0	0	0	0	0	0	0	0	436.5	7,003
C2H4	0	0	0	0	0	0	0	0	3.45	97
C2H6	0	0	0	0	0	0	0	0	17.09	513.8
C3H6	0	0	0	0	0	0	0	0	1.34	56.34
C3H8	0	0	0	0	0	0	0	0	6.96	306.8
C4H8	0	0	0	0	0	0	0	0	0.90	50.34
C4H10	0	0	0	0	0	0	0	0	2.37	137.6
CH3OH	0	0	0	0	0	0	0	0	0.00	0.00
CO	0	0	0	0	0	0	0	0	4,027	112,795
CO2	0	0	235	10,348	0	0	0	0	320	14,069
COS	0	0	0	0	0	0	0	0	0.02	1.26
HCN	0	0	0	0	0	0	0	0	0.00	0.00
HCL	0	0	0	0	0	0	0	0	0.00	0.00
H2	0	0	0	0	0	0	0	0	2,198	4,431
H2O	0	0	154	2,773	1,865	33,603	211	3,796	0.00	0.00
H2S	0	0	0	0	0	0	0	0	0.02	0.72
MIBK	0	0	0	0	0	0	0	0	0.00	0.00
N2	2,271	63,616	2,291	64,185	0	0	0	0	421.7	11,814
NH3	0	0	0	0	0	0	0	0	0.0	0.0
O2	611	19,563	412	13,180	0	0	0	0	0.0	0.0
PHENOL	0	0	0	0	0	0	0	0	0.0	0.0
SO2	0	0	0.004	0.257	0	0	0	0	0.0	0.0
Total Flow lbmol/hr	2,911		3,121		1,865		211		7,438	
Total Flow lb/hr	84,341		91,654		33,604		3,796		151,400	
Total Flow cuft/hr	1,104,062		1,685,249		567		4,741		154,282	
Temperature F	60		280		242		680		114	
Pressure psi	14.7		14.7		900.0		510.0		297.0	
Vapor Frac	1		1		0		1		1	
Liquid Frac	0		0		1		0		0	
Enthalpy Btu/lb	-4		-559		-6,654		-5,521		-1,709	
Density lb/cuft	0.0764		0.0544		59.2266		0.8007		0.9813	
Average MW	28.9697		29.3634		18.0153		18.0153		20.3557	

12/28/2005 12:59

This page intentionally left blank

VI.3 PLOT PLAN AND SITE LAYOUT

A conceptual general equipment arrangement and plot plan is shown in Exhibit VI.3-1. The land requirement for the Syngas Production Reference Plant is estimated to be about 8 acres not including the ASU. About 0.8 acres of this is allocated for 14 days coal and limestone storage (about 16,000 tons of coal and 500 tons of limestone). The area allocated for the gasifier process package is about 0.2 acres, and includes sufficient area for addition of a spare gasifier. An additional 2.6 acres is allocated for the ASU plant including and supporting systems.

An elevation drawing of a conceptual BGL gasification package installation containing one operating and one spare gasifier is shown in Exhibit VI.3-2. The overall height of the structure housing the equipment, including height required for coal and limestone feed system above each gasifier and that required for slag removal system below the gasifier, is about 115 feet.

Exhibit VI.3-1 Conceptual General Equipment Arrangement and Plot Plan for the Syngas Production Reference Plant

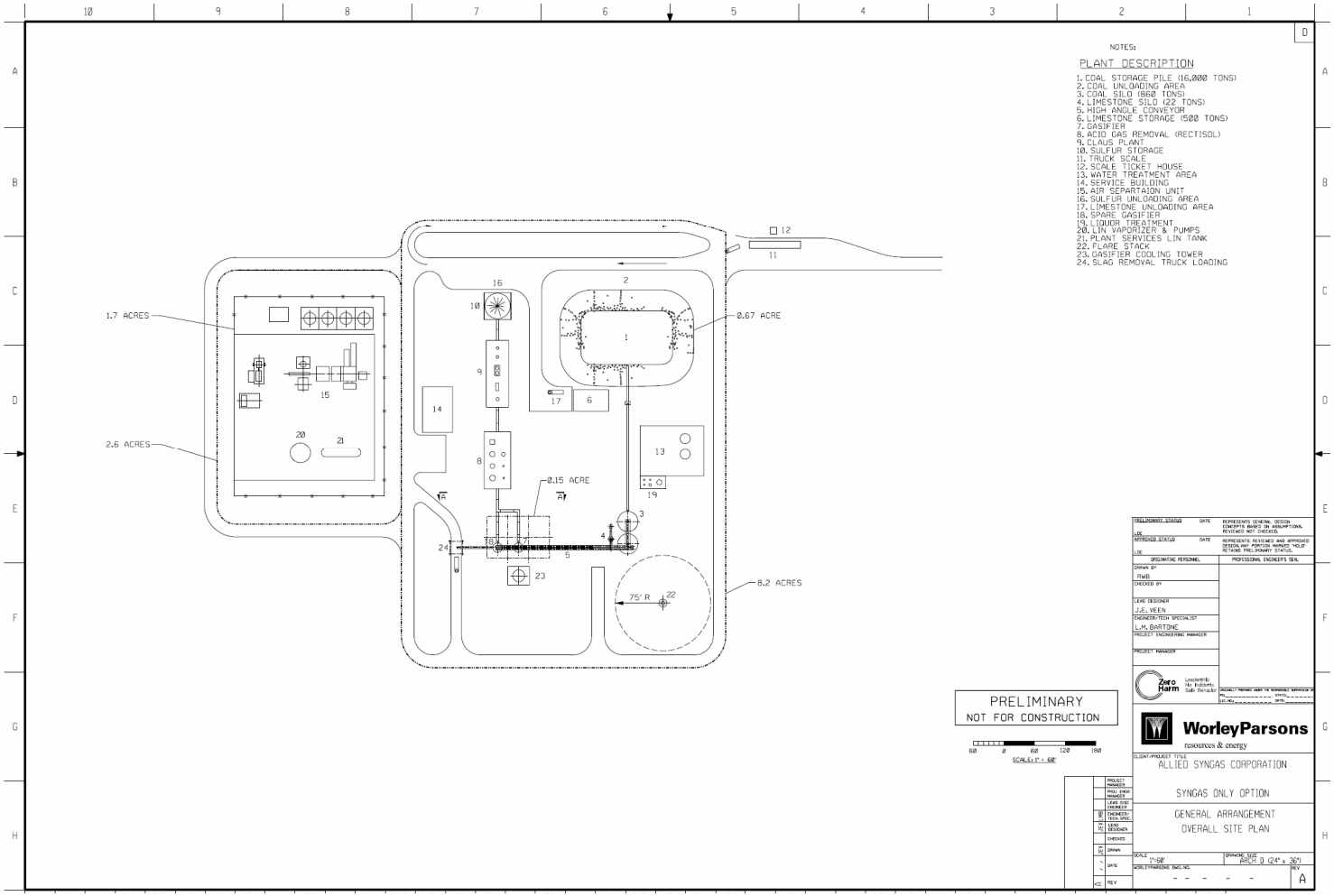

Exhibit VI.3-2 Conceptual Elevation of Gasification Process Installation

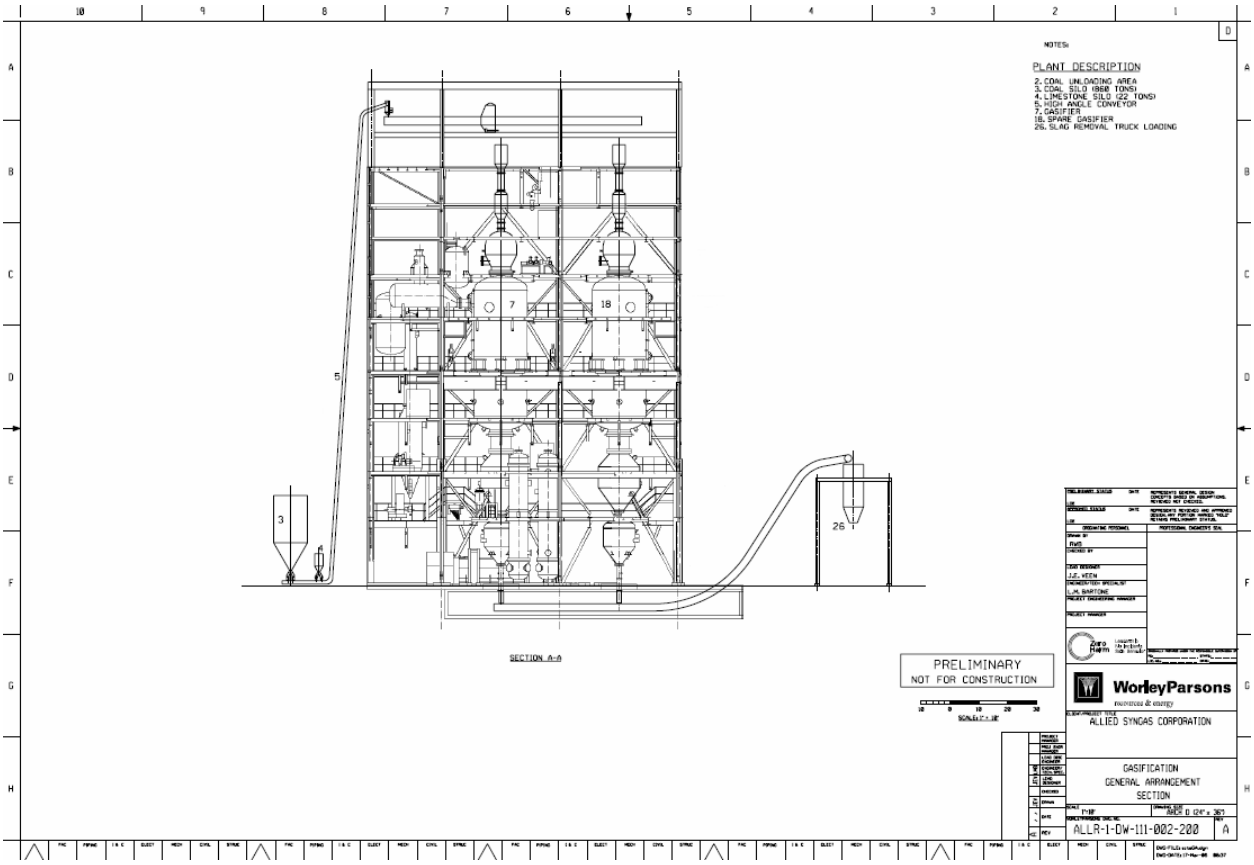

This page intentionally left blank

VI.4 SOLIDS HANDLING SYSTEMS DESCRIPTIONS

VI.4.1 COAL RECEIVING, STORAGE, AND HANDLING

Illinois #6 coal, presized to ¼" x 2", is received, stored, mixed with limestone (flux), transported to the gasifier, and fed into the gasifier lock hopper. A simplified process flow diagram of the system and equipment general arrangements are shown in Exhibit VI.4-1 and Exhibit VI.4-2.

VI.4.1.1 Coal Receiving and Storage

The coal receiving and storage system receives coal, meeting the specifications defined in the Design Requirements Document, from delivery trucks and stores the coal in an outdoor area for reclaim and transport to the gasifier feed system. The system is designed to receive and unload a minimum of 10 coal delivery trucks per hour (70 trucks per day). This allows for receipt of 7 days gasifier consumption at 100% load in 5 days, with unloading occurring over a 7 hour period per day. Trucks will not normally be received at night or on weekends. Coal trucks may range from a 23 ton net tri-axle up to a "Kentucky" type truck rated for 50 ton net weight. The system includes a truck scale for weighing delivery trucks entering and leaving the plant.

The outdoor coal storage area, measuring about 150 ft. by 200 ft., is sized to store about 16,000 tons of coal, sufficient to fuel the gasifier for 14 days at full operating capacity.

VI.4.1.2 Coal Handling and Preparation System

The Coal Handling and Preparation System is designed to perform the following functions:

- Reclaim as-received coal from the coal storage area,
- Screen the coal to remove any material greater than 2" in size,
- Remove magnetic material,

- Store the prepared coal in day bins (18 hour), and
- Meter coal from the day bins to a gasifier feed conveyor.

Coal is reclaimed from the long-term storage pile by a 40 ft. long, 18 degree reclaim feeder and delivered to a vibrating screen at a rate of 250 tons per hour, as shown in Exhibit VI.4-1. The vibrating screen separates oversized (>2") material onto an oversize conveyor that transports the oversized material to an oversized material pile. Coal meeting the top size specification is transported via a high angle conveyor to a reversible belt conveyor that distributes the coal to two, 60° cone type storage silos, each with a capacity of 430 tons. The high angle conveyor consists of two motor driven belts between which the solid material to be transported is sandwiched. An example of a Snake Sandwich High Angle Conveyor manufactured by Dos Santos International for feeding two coal silos is shown in Exhibit VI.4-3. High angle conveyors are used to minimize the land requirement for the syngas production plant. The two silos are steel vessels each 32 feet in diameter with straight shell heights of 45 feet. The total silo capacity is sufficient for 18 hours coal consumption by the gasifier at 100% load. On its way to the silos, the coal is passed through a magnetic material separator where magnetic material is removed and dumped into a container for disposal, and is weighed via a coal scale to measure the quantity of coal being fed to the silos.

Coal is metered from each day silo by a silo discharge feeder onto one of two 100% capacity high angle gasifier feed conveyors, via a two-way diverter gate at the discharge of each silo, at a rate of about 47.7 short tons/hour.

VI.4.2 LIMESTONE RECEIVING, STORAGE, AND HANDLING

Limestone, presized to ¼" x 3/4", is received, stored, mixed with coal, transported to the gasifier, and fed into the gasifier lock hopper. A simplified process flow diagram of the system and equipment general arrangements are also shown in Exhibit VI.4-1 and Exhibit VI.4-2.

VI.4.2.1 Limestone Receiving and Storage

The limestone receiving and storage system receives limestone, meeting the specifications defined in the Design Requirements Document, from delivery trucks and stores the limestone in an outdoor area for reclaim and transport to the gasifier feed system. The system is designed to receive and unload a minimum of two, 23-ton limestone delivery trucks in a 7-hour period each day. This

allows for receipt of 7 days gasifier consumption at 100% load in 5 days. Trucks will not normally be received at night or on weekends. The limestone delivery trucks will be weighed as they enter and leave the facility via the same scales as used for weighing the coal delivery trucks.

The outdoor limestone storage area, measuring about 34 ft. by 55 ft., is sized to store about 500 tons of limestone, sufficient to fuel the gasifier for 14 days at full operating capacity.

VI.4.2.2 Limestone Handling and Preparation System

The Limestone Handling and Preparation System is designed to perform the following functions:

- Reclaim as-received limestone from the coal storage area,
- Store the limestone in a day bin (18 hour), and
- Meter limestone from the day bin to a gasifier feed conveyor.

Limestone is reclaimed from the long-term storage via a front end loader and placed in a reclaim screw feeder hopper, as shown in Exhibit VI.4-1. A screw feeder then transports the limestone at a rate of 10 tons per hour to a high angle conveyor that transports the limestone to a 60° cone type storage silo having a capacity of 22 tons, sufficient for 18 hours consumption by the gasifier at 100% load. An example of a Snake Sandwich High Angle Conveyor manufactured by Dos Santos International for feeding the limestone silo is shown in Exhibit VI.4-4. The silo is a steel vessel, 8 feet in diameter with straight shell height of 12 feet.

Limestone is metered from the day silo by a silo discharge feeder onto one of two 100% capacity high angle gasifier feed conveyors, via a two-way diverter gate at the discharge of the silo, at a rate of about 1.2 tons/hr.

VI.4.3 COAL/LIMESTONE GASIFIER DELIVERY SYSTEM

The coal and limestone gasifier delivery system conveys the coal and limestone mixture to the gasifier feed lock hopper. Coal and limestone from the day bins are transported via one of two 100% high angle gasifier feed conveyors to a 50-ton weigh hopper located above the gasifier feed lock hopper. The weigh hopper's capacity is equivalent to one hour's consumption by the gasifier at 100% load. An example of a Snake Sandwich High Angle Conveyor manufactured by Dos Santos International for feeding coal/limestone

to the weigh hopper is shown in Exhibit VI.4-5. Approximately 7 tons of coal/limestone mixture is metered from the 50-ton weigh hopper into a 7-ton hopper located between the 50 ton weigh hopper and the gasifier. At approximately 10 minute intervals, the coal/limestone mixture in the 7-ton hopper is dumped into the gasifier feed lockhopper.

Exhibit VI.4-1 Simplified Process Flow Diagram of Coal and Limestone Receiving, Storage, and Handling System

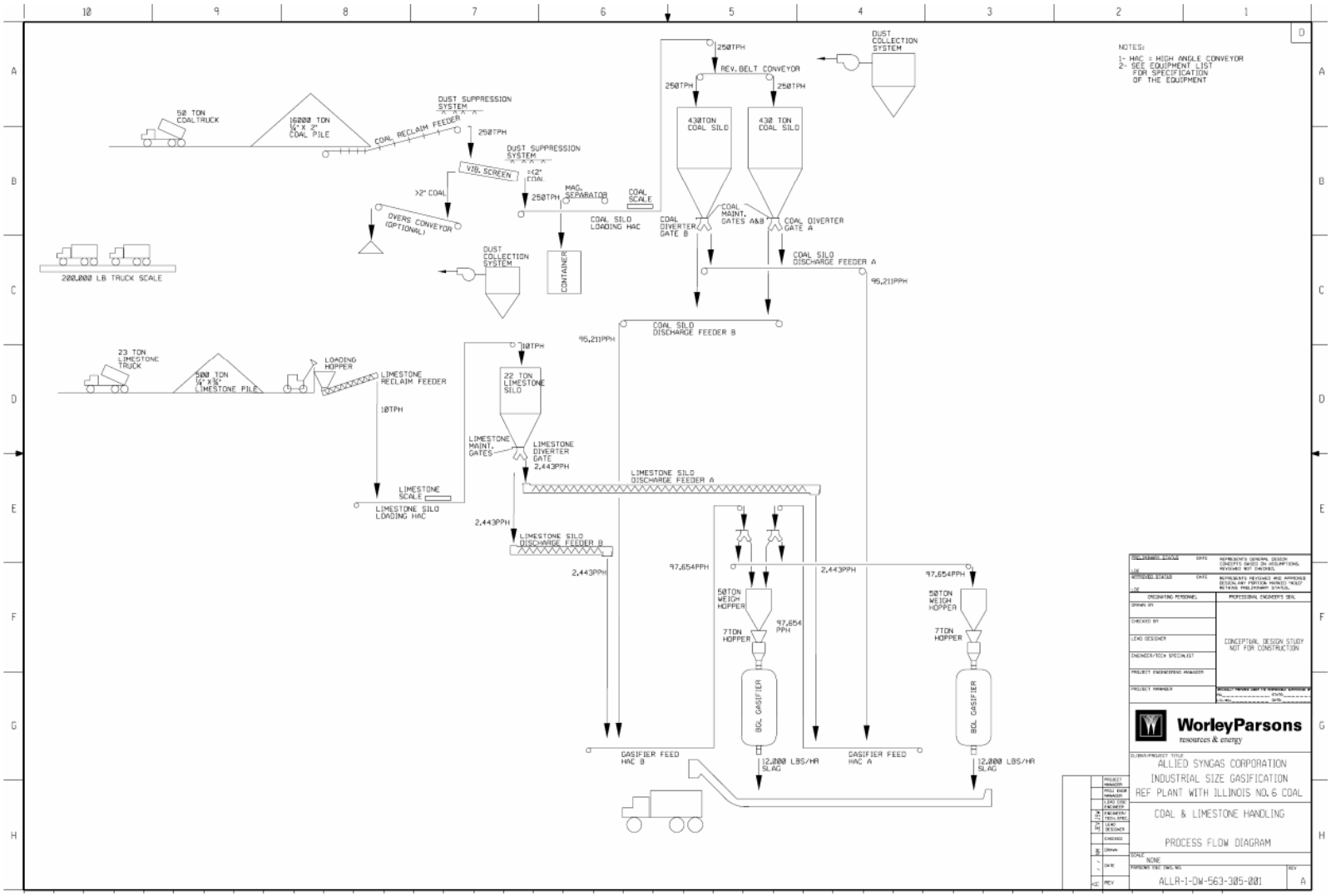

Exhibit VI.4-2 Coal and Limestone Storage and Handling Systems General Arrangement

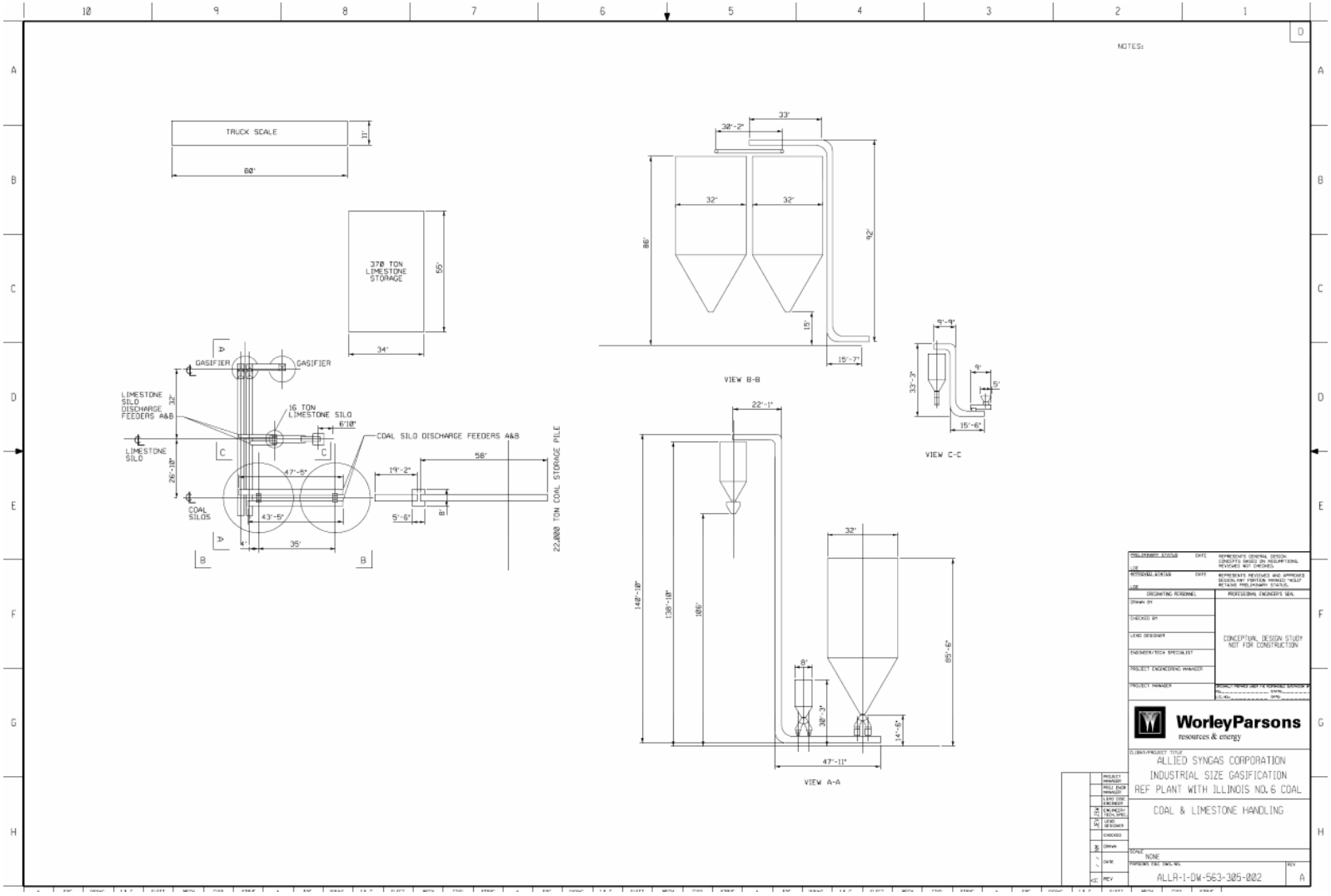

Exhibit VI.4-3 Example of Snake Sandwich High Angle Conveyor by Dos Santos International for Feeding Coal Silos

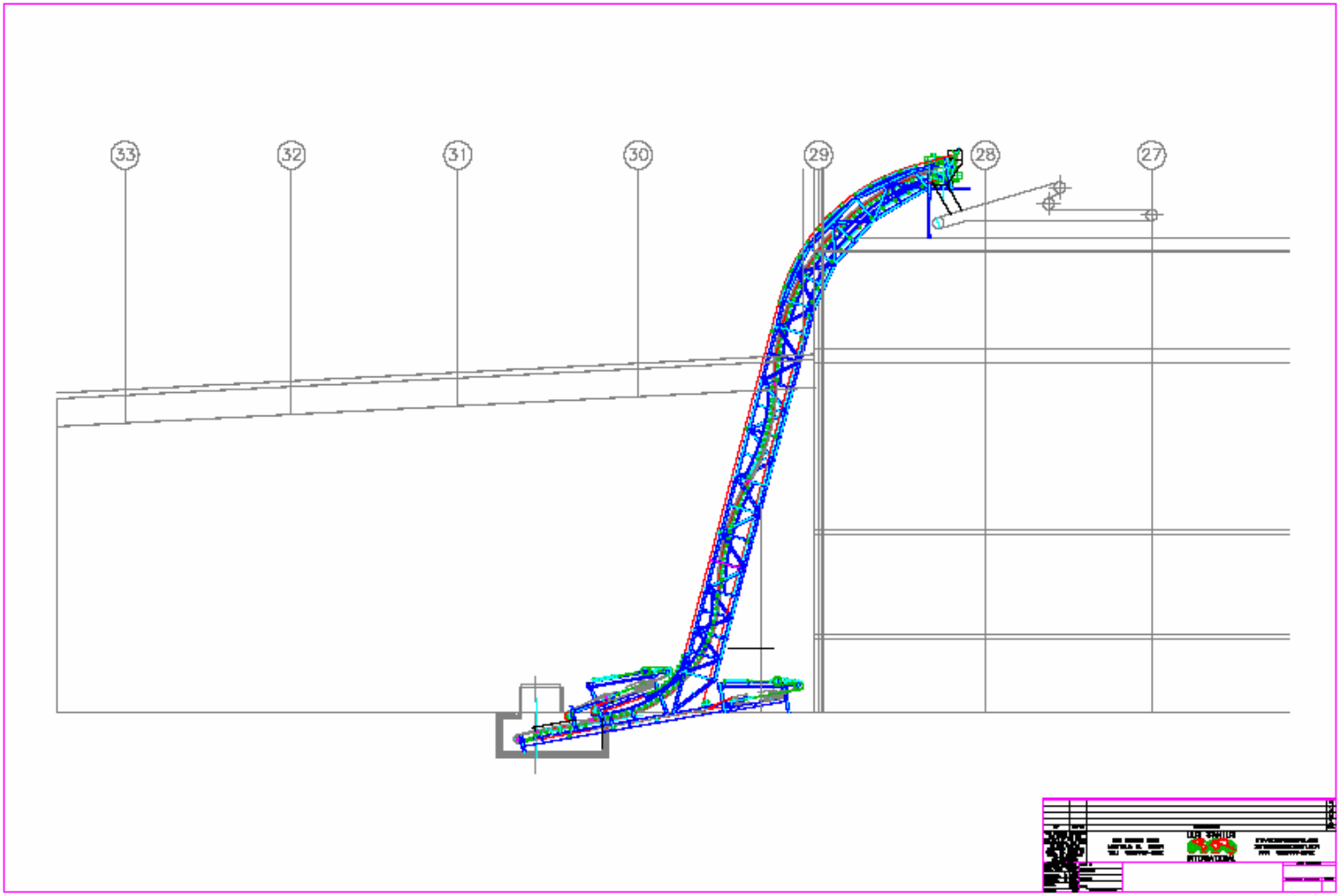

Exhibit VI.4-4 Example of Snake Sandwich High Angle Conveyor by Dos Santos International for Feeding Limestone Silo

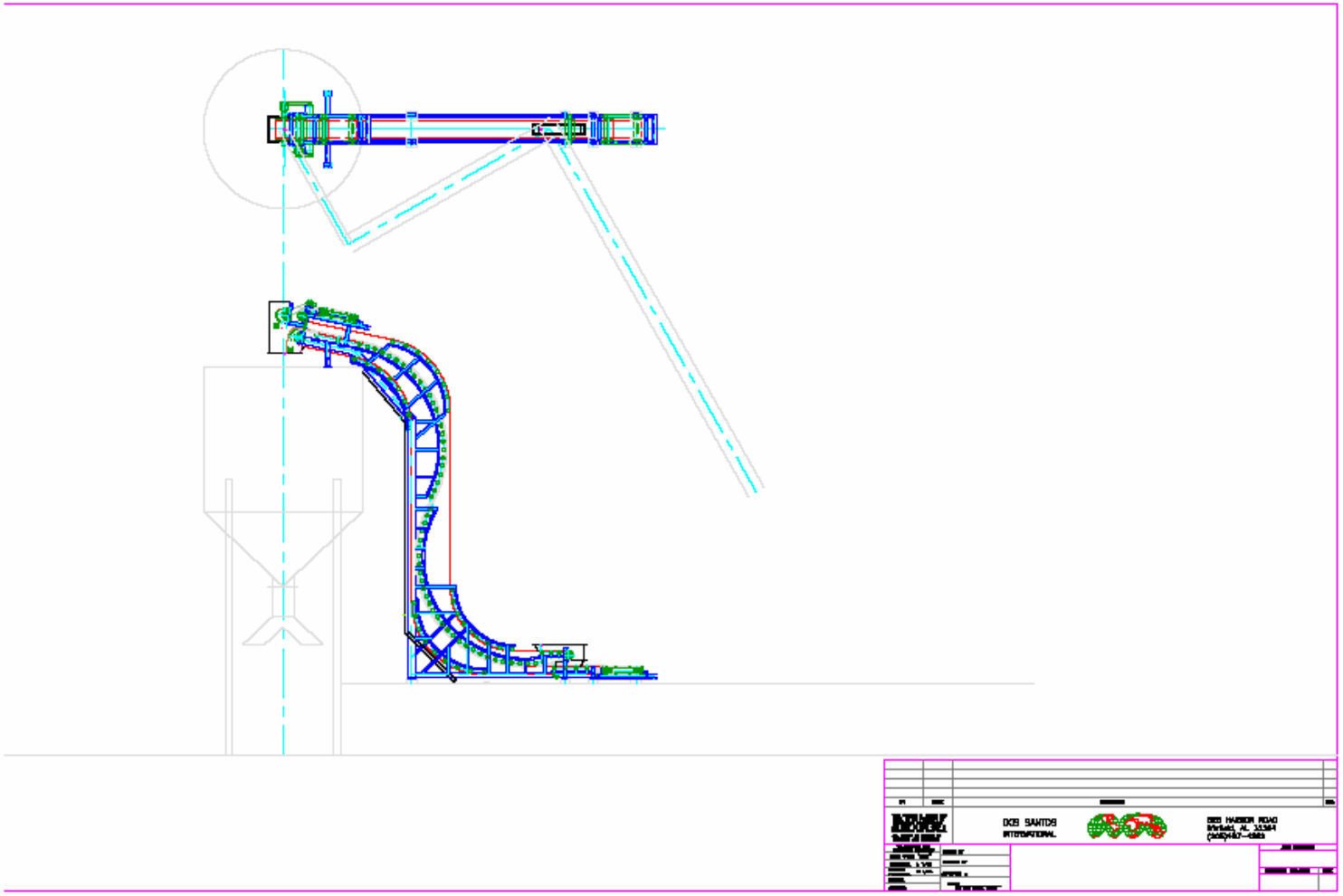

Exhibit VI.4-5 Example of Snake Sandwich High Angle Conveyor by Dos Santos International for Feeding Coal/Limestone to Gasifier Hopper

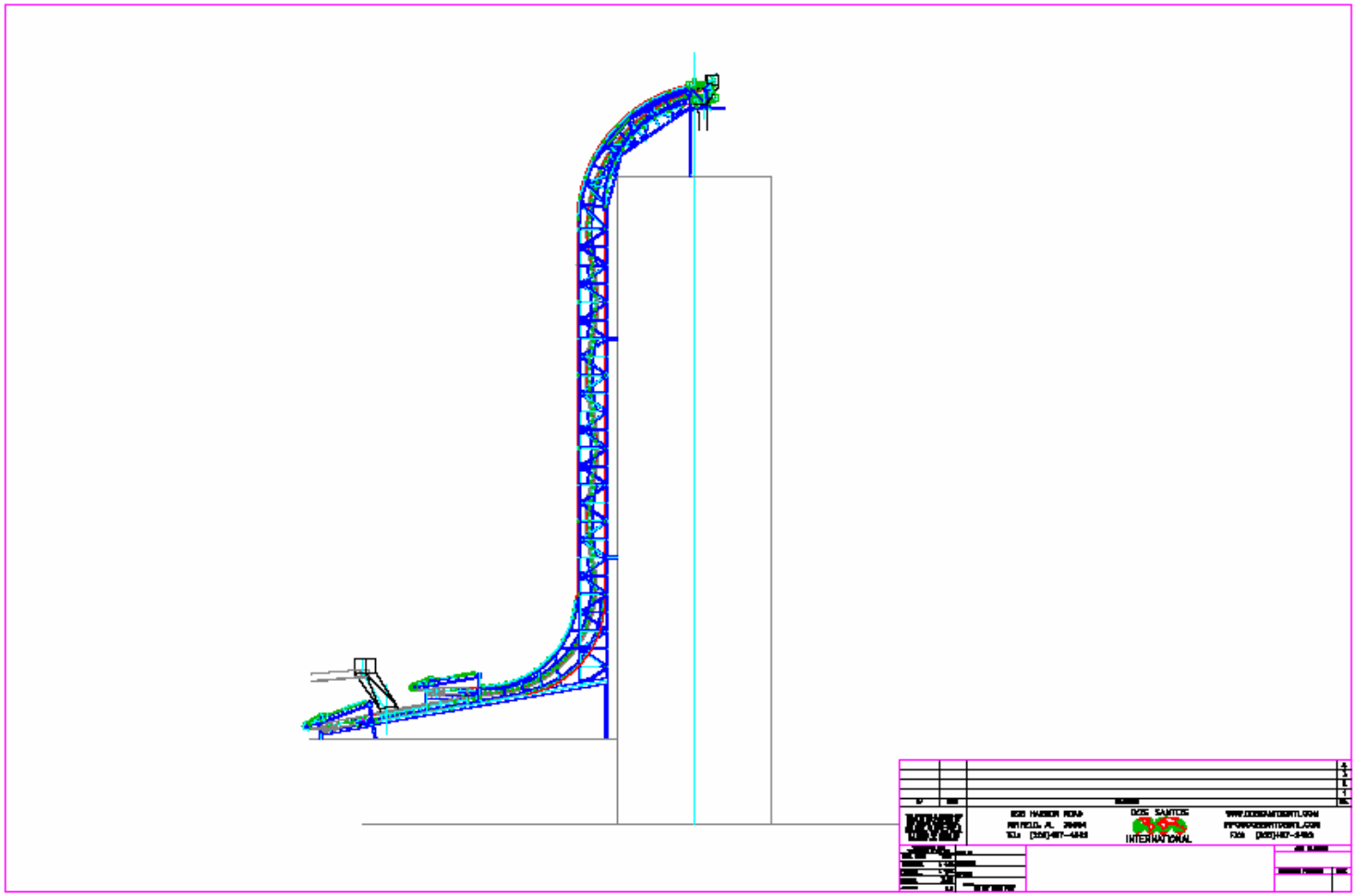

VI.4.4 SLAG HANDLING

The slag handling system collects approximately 7 tons/hour of slag from the gasifier slag lock hopper and transports it to a storage/truck loading area for sale as a byproduct or disposal. The system consists of a water-filled trough with drag-chain conveyor that transports the slag to a truck loading station.

The system will be controlled via a stand alone PLC with DCS interface, and will be provided with instrumentation and components as required for a complete functional, reliable, and safe operating system.

VI.5 GASIFIER PROCESS PACKAGE DESCRIPTION

The gasifier process package includes the following:

- Two gasifiers (one operating and one spare) each with coal, limestone, oxygen, steam, and nitrogen feed systems; a slag removal system; and a syngas wash cooler
- Primary syngas heat exchanger (waste heat exchanger)
- Syngas coolers
- Gas/liquor separation and tar/oil reinjection system.

Refer to the conceptual process flow diagram in Exhibit VI.2-3 and the table in Exhibit VI.2-9 for estimated state point composition and conditions for the gasifier process package.

VI.5.1 GASIFIER

The BGL gasifier is a slagging, fixed bed gasification process utilizing counter current gas/solid flow. It is designed to process about 1,145 tons/day of Illinois #6 coal. A concept sketch of the gasifier is shown in Exhibit VI.5-1. Coal is introduced into the top of the gasifier through a feed lock. The gasification agents, steam and oxygen, are injected through the tuyeres in the lower part of the gasifier into a hot fuel bed. Gaseous reaction products ascend countercurrent to the coal. A stirrer is incorporated in the top of the gasifier when the fuel is a caking coal to ensure smooth continuous flow of coal into the gasifier.

The gasifier is designed to achieve a smooth transition of the fuel from the solid to the gaseous phase. Essentially cold solids that enter at the top of the reactor are heated by hot gases rising from the bottom. The counter-current principle results in one of the lowest oxygen consumption rates of commercial gasification processes.

Exhibit VI.5-1 Schematic Cross-Section of Gasifier

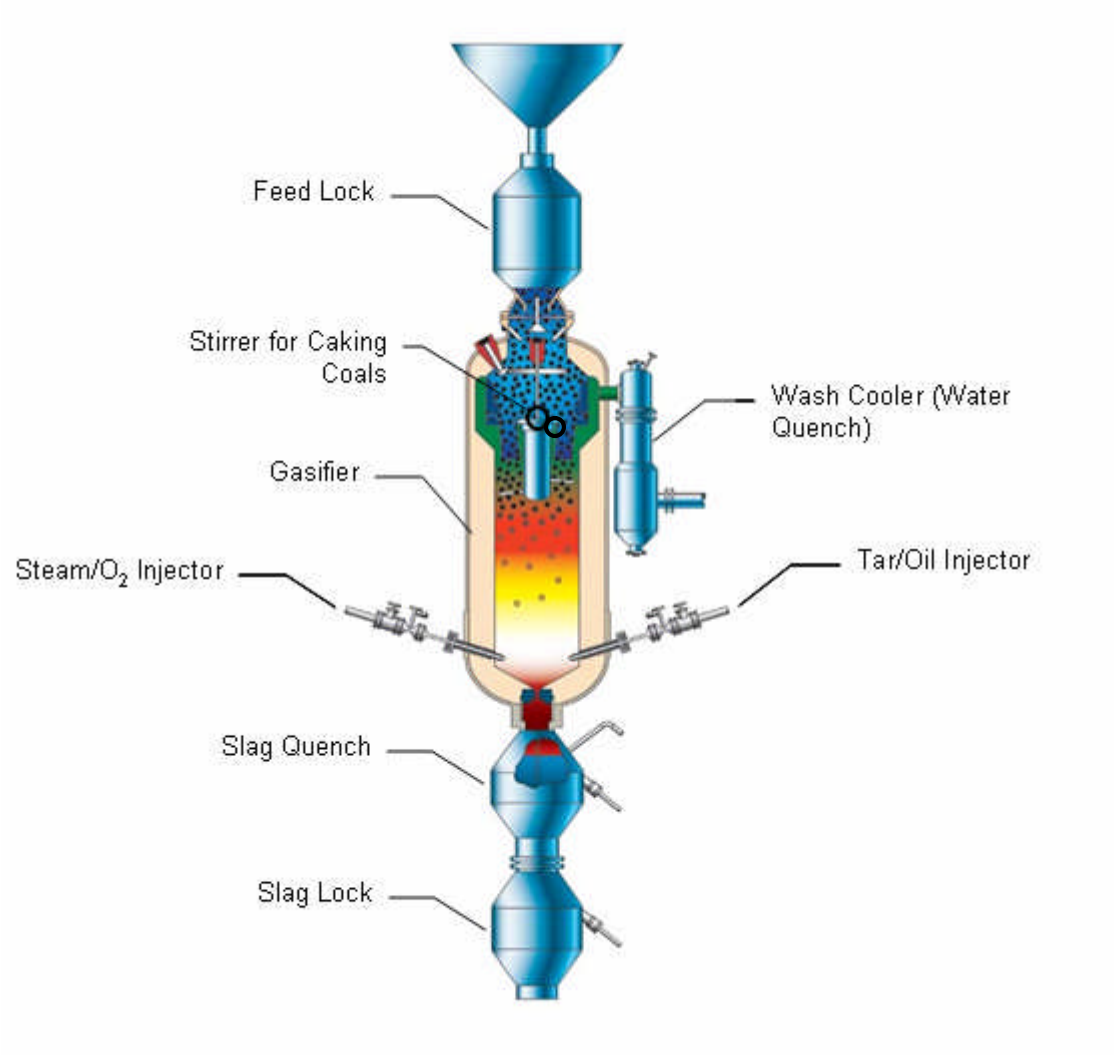

Upon further devolatilization, the coal yields a char or semi-coke that is mainly a carbon skeleton. This process is known as "char conditioning." The formation of well conditioned char within the stirred zone favors good bed behavior.

The gasifier operates at elevated pressure (about 350 psia). The elevated pressure leads to smaller main equipment dimensions and reduces effective gas volume that makes the downstream units smaller in volume and simpler in design.

Liquid slag is discharged by a tap hole arranged centrally at the bottom of the hearth into a water bath in the slag quench vessel. Through rapid cooling, the slag is converted into a solid frit that can simply be disposed of or utilized further.

The gasification media – steam and oxygen – are injected into the gasifier through water-cooled nozzles (tuyeres). Steam and oxygen react immediately with the coke from the gasification zone to form mainly hydrogen and carbon monoxide.

The upward flowing crude gas leaves the fuel bed with a low velocity so that the dust discharge with the gas is minimized.

The crude gas exiting the gasifier enters a wash cooler where the gas is washed intensely with gas liquor, quenched, and saturated with steam. Simultaneously, higher hydrocarbons (tar) condense and dust from the gas is removed. The raw gas is then routed to the first gas cooling stage (waste heat boiler).

VI.5.2 COAL/LIMESTONE FEED SYSTEM

As mentioned previously, the gasification process is under pressure. The coal and limestone (flux) solid mixture is fed to the gasifier reactor via a feed lock operated on a batch basis, loading about 7 tons of coal/limestone mixture during each loading cycle. A limited fuel storage capacity is kept in the top of the gasifier, adding to the safety of the process as it allows the process to continue even if coal lock problems occur. The coal/limestone batch lock hopper cycling contains the following steps:

- Starting with an empty depressurized coal/limestone lock, the bottom cone valve is closed and the top cone valve is opened. Coal and limestone drop by gravity from a weigh hopper, containing only enough coal/limestone mixture to fill the lock, into the lock.
- The top cone valve is then closed and the lock is pressurized with high pressure nitrogen from the ASU plant.
- The bottom cone valve is opened and the fuel gravitates into the gasifier. The system is designed such that for safety reasons the bottom cone valve can be opened only at an even pressure between the gasifier and lock.
- When the lock is empty, the bottom cone valve is closed automatically and the lock is depressurized.
- The top cone valve is opened, the remaining gas is ejected via a dust filter and exhaust gas blower.
- The cycle is then repeated.

VI.5.3 SLAG REMOVAL SYSTEM

The slag removal system consists of a natural gas (or syngas) ring burner, slag quench tank, and slag lock. About 7 tons/hr of slag is intermittently tapped and water quenched automatically, to form a frit that is locked out of the system before being collected and transported for disposal or utilization.

To maintain temperature of the slag pool in the hearth, to prevent tap blockage, and to consume any remaining coke particles, a ring burner is installed underneath the central tap hole of the gasifier. Hot burner gases flow through the slag nozzle into the gasifier and keep the slag in the hearth. After a specific slag height has been reached, as indicated by the differential pressure, the burner is automatically switched to part load operation. The excess pressure of the quench vessel is slightly reduced (below the gasifier pressure) and the liquid slag is discharged through the slag tap into a water-filled slag quench vessel. Upon reaching the minimum slag level, the burner returns to normal operating mode and the tapping is ended. The slag level is controlled automatically via a differential pressure between the quench vessel and slag hearth.

When quenched, the slag forms a glassy granular fritted material of approximately 1/8 inch in diameter. The granular material gravitates further into the water filled slag lock. The sensible heat of the slag is removed via a cooling circuit.

The slag lock works according to the same principle as the coal/limestone lock. It is filled with water and pressurized. The slag is discharged, via a chute, onto a slag conveyor belt and transported to intermediate storage.

VI.5.4 SYNGAS WASH COOLER

Raw gas leaves the top of the gasifier above the fuel bed at a temperature less than 1,000°F and enters the wash cooler (water quench) directly flanged to the gasifier. The raw gas is directly quenched, cooled, and saturated by circulated gas liquor from the gas liquor separation system. The raw gas temperature is reduced to about 330°F. Simultaneously, dust carried with the gas and tar is removed from the gas.

The multi-phase flow from the wash cooler is then directed to the waste heat exchanger (primary heat exchanger).

VI.5.5 WASTE HEAT EXCHANGER (PRIMARY HEAT EXCHANGER)

The raw gas from the wash cooler enters the primary heat exchanger and is cooled to about 311°F by transferring heat to boiler feed water and generating about 17,939 lb/hr of low pressure steam (75 psia / 309°F). Gas liquor and hydrocarbon condensate are discharged automatically from the sump of the heat exchanger to the gas liquor separation unit.

VI.5.6 SYNGAS COOLING SYSTEM

Approximately 202,580 lb/hr of syngas from the primary heat exchanger is cooled via three tubular heat exchangers from about 311°F to about 95°F before it is transported to the syngas cleanup process. Approximately 2.9 million lb/hr of circulating water is used to cool the syngas. Gas liquor condensate from the coolers is discharged to the liquor separation process for removal of hydrocarbons and then to the liquor treatment system prior to recycling the waste water or discharging it to the environment. Approximately 158,346 lb/hr of cooled syngas leaves the system and is transported to the syngas cleanup system.

VI.5.7 GAS LIQUOR SEPARATION AND TAR/OIL REINJECTION SYSTEM

The gas liquor separation and tar/oil reinjection system removes tars and oils from the gas liquor from the primary heat exchanger (waste heat exchanger) and syngas coolers and recycles the tars/oils back to the gasifier.

The tars, oils, and solids are removed from the gas liquor by gravity separation, achievable by an adequate settling time in the tar and condensate separators, and a sufficient difference in the specific gravity between water and the tar/oil fractions. Tars and oils are collected in a liquids products tank, along with BTX from the Rectisol AGR system and phenol from the waste water treatment system. The liquid products (about 7,960 lb/hr) are recycled from the tank to the gasifier. Phenol containing gas liquor condensate from the separation system is transported to the waste water treatment system. Sour gas from the separation system is sent to the Claus unit for sulfur recovery. Cooling water is supplied to the system from the circulating water system, and about 1,611 lb/hr of steam to heat liquor in the separation system is provided from the low pressure steam header in the steam system.

This page intentionally left blank

VI.6 SYNGAS CLEANUP SYSTEM DESCRIPTION

The syngas cleanup system consists of an acid gas removal (AGR) system, and sulfur production system. The AGR system utilizes a Rectisol process to concentrate and remove sulfur in the form of H_2S and COS and trace contaminants from the syngas prior to the syngas being transported to the end-user. The Rectisol process was selected based on results of a preliminary evaluation of commercially available AGR technologies, as discussed in the Conceptual Design Requirements Document in Section V.

Sour gas from the Rectisol process enters a Claus process for production of elemental sulfur byproduct from the H_2S. Refer to the conceptual process flow diagrams in Exhibit VI.2-4 and Exhibit VI.2-5, and the tables in Exhibit VI.2-10 and Exhibit VI.2-11 for estimated state point composition and conditions for the AGR and sulfur production systems.

Data from tests on a BGL gasification process indicate that greater than 90% of the mercury entering the system with the coal reports to the gas liquor stream, and levels below detectable limits report to the syngas. Therefore, it is not anticipated that additional mercury removal from the syngas will be required, and no mercury removal system is included in the reference plant. However, if future testing indicates that additional mercury removal is required to meet environmental criteria, this could be accomplished via an activated carbon bed upstream of the AGR system.

VI.6.1 RECTISOL PROCESS DESCRIPTION

The approximately 158,343 lb/hr of raw gas from the syngas coolers enters an H_2S absorber after being cooled by cleaned syngas leaving the absorber. In the absorber, the raw gas is washed clean of not only H_2S and COS, but also HCN, NH_3, and BTX. The majority of the methanol is recovered in a hot regenerator and methanol stripper. A small amount of fresh methanol is required (about 30 lb/hr)

The raw gas is first prewashed in the bottom section of the absorber and then enters the main section of the absorber via a chimney tray. Laden prewash methanol leaving the bottom of the absorber is routed to a sour flash. The sour gas from the sour flash is directed to the Claus plant. The liquid from the sour flash is sent to a stabilizer tank, where water is introduced, and then to a decanter. BTX from the decanter is transported to the liquids product tank in the gas liquor separation system for recycle back into the gasifier. The remaining liquid from the decanter is heated by low pressure steam prior to being introduced into the methanol stripper. Water from the stripper is directed to the waste water treatment system.

The sulfur-free gas leaving the absorber at the top is reheated in the raw syngas cooler. CO_2, CO, and H_2 recovered from the laden methanol in a flash regenerator is compressed and mixed with the syngas. The resulting product syngas, with a total sulfur concentration of less than 3 ppmv (<0.3gr/100scf), at a pressure of about 300 psia, is available for transport to the syngas-fired boiler and industry end-user.

The laden methanol leaving the main stage of the H_2S absorber is fed to a flash regenerator for recovery of the bulk of the co-absorbed CO_2 as well as the CO and H_2 which are also co-absorbed in very small amounts. Tail gas from the Claus unit is also compressed and fed to the flash regenerator. The major portion of the gas that leaves the flash regenerator at a pressure of about 20 psia is compressed and added to the syngas from the H_2S absorber. A small amount of flashed gas is directed to the hydrogenation reactor in the Claus unit.

The methanol from the flash regenerator enters the hot regenerator for final regeneration by stripping with methanol vapor generated in a reboiler by means of low pressure steam. The acid gas leaving the top of the regenerator is cooled to recover methanol, which is recycled to the regenerator. The acid gas is then transported to the Claus unit for recovery of the sulfur in the gas. Hot regenerated methanol is pumped back to the H_2S absorber via a refrigeration cooler. Water from the methanol stripper is directed to the waste water treatment system.

Approximately 158,701 lb/hr (2.96 million scfh) of clean syngas at about 300 psia / 113°F exits the cleanup system. About 7,301 lb/hr is used in a syngas-fired boiler to generate steam for the gasification process, and 151,400 lb/hr is available for sale to industrial users. The higher heating value (HHV) of the product syngas is about 6,290

Btu/lb (337 Btu/scf), and the lower heating value (LHV) is about 5,894 Btu/lb (316 Btu/scf).

About 17,427 lb/hr of acid gas and 869 lb/hr of sour gas from the Rectisol process is transported to the Claus sulfur recovery unit.

Approximately 136,100 lbs/hr of cooling water required for the approximate 2.45 MMBtu/hr cooling duty in the process is supplied by the circulating water system. About 14,800 lb/hr of low pressure (75 psia) steam required for the process is supplied from the low pressure steam header in the steam system. Refrigerant for cooling the various flow streams is supplied by a refrigeration system requiring about 1,570 kW of electrical power. Pumping and compressor power requirements for the Rectisol process total about 2,000 kWe.

VI.6.2 CLAUS PROCESS DESCRIPTION

The Claus process recovers about 99% of sulfur from the acid gas and sour gas from the Rectisol, liquor separation, and waste water treatment processes in the form of elemental sulfur. The Claus process consists of a Claus furnace and two catalytic stages. The oxidant to the Claus furnace is air enriched to about 30% oxygen by weight. The feed streams are first preheated using steam and then enter the Claus furnace where about 75% of the H_2S is reacted to SO_2. The exhaust is passed through a waste heat boiler to generate steam for the process, and the SO_2 and remaining H_2S in the exhaust is then reacted to sulfur and water in the catalytic stages. Tail gas from the process is hydrogenated and quenched in a water wash tower and then recycled to the flash regenerator in the Rectisol process. Blowdown from the process is sent to the waste water treatment system. Export steam is transported to the low pressure and high pressure steam headers, and condensate to the flash tank in the steam system. Sulfur product is condensed and collected in a sulfur pit for transport to a sulfur product storage area.

About 13,200lb/hr of intermediate pressure (840 psia, 240°F) boiler feed water for steam generation in the Claus process is provided from the deaerator in the steam system. About 570 lb/hr of oxygen is supplied from the ASU. Approximately 222,200 lb/hr of cooling water to provide about 4 MMBtu/hr of cooling duty in the Claus process is supplied by the circulating water system.

About 3,000 lb/hr of elemental sulfur byproduct is produced in the Claus system.

This page intentionally left blank

VI.7 WASTE WATER TREATMENT SYSTEM DESCRIPTION

The waste water treatment system treats the waste water and gas liquor condensate from the processes prior to reusing the water for slag cooling or in other processes. Refer to the conceptual process flow diagram in Exhibit VI.2-6 and the table in Exhibit VI.2-12 for estimated state point compositions and conditions for the waste water treatment system.

Waste water comes from the Rectisol unit (methanol stripper bottoms), Claus Unit (blowdown), and waste heat exchanger steam drum blowdown. Gas liquor condensate comes from the gas liquor separation system.

Gas liquor is first introduced into an extraction column. Phenol containing condensate is sent to an MIBK stripper. Phenol from the stripper is recycled to the gasifier via the liquid products tank in the liquor separation system. Tail gas from the stripper is sent to a tail gas burner after it is cooled by cooling water to condense solvents that are recycled to the extraction column.

Dephenolated liquid from the extraction column is sent to a sour gas stripper. Sour gas from the stripper is sent to the Claus unit. Liquid from the stripper is sent to a surge tank, along with water from the Rectisol and Claus units, where calcium oxide (CaO) is added and then sent to a mixing tank where iron chloride ($FeCl_3$) is added to induce precipitation of solids. Solids (sludge) are then separated from the liquid, and the liquid is transported to a biological reactor for final cleanup. The gas from the biological reactor is vented, and the water is discharged in accordance with local regulations or reused in plant processes if it meets process specifications.

About 3,305 lb/hr of low pressure steam (75 psia) and 490 lb/hr of intermediate pressure steam are provided by the steam system for liquor heating and the MIBK stripper in the waste water treatment process. About 25,000 lb/hr of cooling water is supplied by the circulating water system for gas cooling in the process.

This page intentionally left blank

VI.8 PROCESS STEAM SYSTEM DESCRIPTION

The process steam system consists of a steam subsystem that collects and distributes steam from and to various processes, and a syngas-fired boiler system that generates steam for the gasifier and oxygen preheater.

VI.8.1 STEAM SUBSYSTEM

The steam subsystem collects and supplies steam and boiler feed water to the various processes in the syngas production plant. Refer to the conceptual process flow diagram in Exhibit VI.2-7 and the table in Exhibit VI.2-12 for estimated state point compositions and conditions for the steam subsystem.

The system collects low pressure steam from the Claus unit (about 4,680 lb/hr) and waste heat exchanger in the gasification process (about 17,940 lb/hr) in a low pressure steam header for distribution to the Rectisol, waste water treatment, and gas liquor separation systems. The system collects intermediate pressure steam from the Claus unit (1,530 lb/hr) in an intermediate steam header that distributes intermediate pressure steam to the MIBK stripper and steam stripper in the waste water treatment system, and the methanol heater in the Rectisol system. The subsystem also collects the condensate from these processes and the oxygen preheater, adds makeup water, deaerates it, and distributes it to the waste heat exchanger, Claus unit, and syngas-fired boiler.

VI.8.2 SYNGAS-FIRED BOILER SUBSYSTEM

Refer to the conceptual process flow diagram in Exhibit VI.2-8 and the table in Exhibit VI.2-14 for estimated state point compositions and conditions for the syngas-fired boiler subsystem.

The syngas-fired boiler subsystem receives boiler feed water from the steam subsystem and generates about 32,960 lb/hr of 510 psia / 680°F steam for the gasifier (29,160 lb/hr) and oxygen preheater

(3,800 lb/hr) in a fired boiler. Product syngas (7,300 lb/hr) from the Rectisol process and MIBK strip gas (12 lb/hr) from the waste water treatment system provide the 46 MMBtu/hr of fuel energy to the boiler. Exhaust gas from the boiler is directed to a stack for discharge to the environment.

VI.9 FLARE SYSTEM DESCRIPTION

An elevated flare system provides for safe combustion of syngas during gasifier start-up and system upsets. On gasifier start-up, all syngas gas from the gasifier is sent to a gasifier start-up flare until the gasification process has been stabilized on coal. A knock-out vessel removes excess liquids and solids from the gas prior to the gas being introduced into the flare to prevent plugging of the flare system and to minimize emissions during the start-up period. After the gasifier operation is stabilized, the syngas is transported to the gas cleanup system. The syngas from the gas cleanup system is sent to a separate main flare until the syngas meets product specifications. The syngas will also be sent to the main flare system when the performance of any system treating the syngas or gas liquor becomes insufficient to continue safe operation of the system or meet syngas product quality specifications. From an economic standpoint, it is necessary to keep flaring as short as possible. From the emissions point of view, the most important aspect of the stabilization process is to ensure that desulfurization of the syngas and recovery of sulfur take place as quickly as possible.

The flare system is designed to handle the total quantity of syngas produced from the gasifier at 100% load. The height of the flares will be based on a radiant heat level not to exceed 500 Btu/hr/ft^2 at the base of the flares. For purposes of developing the conceptual layout, a flare height of 150 feet and a clear space radius of 75 ft. around the base of the flares were assumed to satisfy the requirements.

This page intentionally left blank

VI.10 CIRCULATING WATER SYSTEM DESCRIPTION

The circulating water system provides cooling water to the gasification process, syngas coolers, Rectisol system, Claus system, liquor separation system, and waste water treatment system. The system consists of a plume-abated, wet-dry mechanical draft cooling tower, pumps, and piping required to remove heat from the cooling water, add makeup water, and distribute the water to the processes. The estimated circulating water requirements for the processes are shown in Exhibit VI.10-1.

Exhibit VI.10-1 Estimated Circulated Cooling Water Requirements

PROCESS	FLOW RATE	SUPPLY TEMPERATURE	RETURN TEMPERATURE
Gasification (incl. syngas coolers)	3,335,643 lb/hr	69°F	87°F
Rectisol	136,111 lb/hr	69°F	87°F
Claus	222,222 lb/hr	69°F	87°F
Waste Water Treatment	25,000 lb/hr	69°F	87°F
Total	3,718,976 lb/hr		

This page intentionally left blank

VI.11 PROCESS WATER SUPPLY SYSTEM

The process water supply system provides demineralized makeup water to the AGR (Rectisol), steam, and circulating water systems. The system also provides water for slag cooling. The estimated process makeup water requirements are shown in Exhibit VI.11-1. A detailed optimization study of water recycling in the plant was not performed. The estimates for makeup water required do take into account use of water from the waste water treatment system to perform a portion of the slag cooling duty.

Exhibit VI.11-1 Estimated Process Makeup Water Requirements

PROCESS	FLOW RATE
AGR (Rectisol) System	270 lb/hr
Steam System	30,174 lb/hr
Circulating Water System	55,440 lb/hr
Slag Cooling	31,188 lb/hr
Total	117,072 lb/hr

This page intentionally left blank

VI.12 INSTRUMENTATION AND CONTROL SYSTEM DESCRIPTION

The instrumentation and control system consists of the equipment required to control the syngas production related processes in a safe and efficient manner. The plant systems will each be controlled by separate digital control systems (DCS) integrated with an overall plant DCS.

This page intentionally left blank

VI.13 ELECTRICAL SYSTEM DESCRIPTION

The electrical system consists of the equipment necessary to receive and distribute power to the electrically driven components in the syngas production plant and building support systems. It includes station service equipment, switchgear and motor control centers, conduit and cable trays, wire and cables, protective equipment (grounding, cathodic protection, etc.), and standby equipment. The anticipated total electrical power required for the syngas production plant is 5,140 kWe. A breakdown of electrical power requirements for major systems is shown in Exhibit VI.13-1.

Exhibit VI.13-1 Estimated Electric Power Requirements Summary

SYSTEM	KWE
Gasification	600
Material Handling	208
Circulating Water	154
Rectisol	3,568
Claus	180
Wastewater Treatment	300
Steam System	130
Total	5,140

This page intentionally left blank

VI.14 AIR SEPARATION UNIT DESCRIPTION

In this syngas production plant option, about 583 tons/day of 99.5% purity oxygen for the gasifier and Claus furnace, and 53 tons/day of nitrogen for feed lock purging at about 517 psia will be purchased across-the-fence from a gas supplier. The type of ASU will be selected by the gas supplier based on the oxygen and nitrogen requirements, and availability requirement, of the syngas production plant. Utilities for the ASU will be the responsibility of the gas supplier. It is anticipated that these utilities will include about 9,700 kWe of electric power and about 3,200 gpm of circulating water for cooling based on a cryogenic ASU.

This page intentionally left blank

VI.15 CAPITAL AND O&M COST ESTIMATES

This section describes the approach and results of the conceptual cost evaluation of the Syngas Production Reference Plant using Illinois #6 coal.

VI.15.1 COST ESTIMATING APPROACH

The approach to capital cost development is a combination of WorleyParsons' estimates of selected specific major systems to supplement the costs from an in-house BGL gasifier cost model that develops capital costs for an entire IGCC power plant. The format includes separate evaluation of major systems and sub-systems for the entire plant. These costs are determined with several levels of complexity depending on the specific system being estimated. The capital cost at the level of Total Field Cost includes equipment, materials, and installation labor.

The resulting capital cost is provided on an estimate form that recognizes each cost account for the plant. Since this study is limited to the production of syngas, a number of the model cost accounts do not have an estimated value. Each account in the Reference Plant estimate contains separate costs for equipment, materials, and installation labor. These costs comprise the Total Field Cost (TFC), also referred to as the Bare Erected Cost (BEC). The Total Capital Cost consists of equipment and material costs, direct and indirect labor costs, engineering costs, other costs and contingencies for the total syngas project. The estimate does not include escalation, financing costs or any additional costs that would be the responsibility of the plant owner. The model helps assure that plant estimates are consistently evaluated and that all relevant process scope is included. When more than one case is evaluated, this approach produces costs that indicate normalized and unbiased results that reflect generic differences.

The cost of plant operating and maintenance is included for the Reference Plant. These costs were developed on an average

annual cost basis. This operating and maintenance cost estimate includes the following:

- Fuel cost
- Fixed Operating Cost
  - Operating labor
  - Maintenance labor and Material
  - Administrative and support labor
- Variable, non-fuel operating costs
  - Consumables
  - Waste disposal
- Other operating costs (By-Products)

VI.15.2 COST BASIS AND ASSUMPTIONS

VI.15.2.1 Capital Cost Basis and Assumptions

The following are the basis for the capital costs:

- Construction performed by Gulf Coast non-union labor.
- Coal will be delivered to the site by truck.
- A separate unloading facility is included for the limestone (flux) supply.
- Slag waste will be trucked to an unspecified off-site disposal area.
- Cost estimate scope is based on study performance summary, heat and material balance data, conceptual site arrangement, and system design descriptions presented in previous sections.
- Cost estimate is in constant June 2005 dollars.
- Estimate for coal and limestone handling systems is based on an in-house conceptual estimate of plant specific material handling scope. The cost does include vendor furnished budgetary costs for over 80% of the equipment cost.
- The estimate for the gas cleanup system and waste water treatment system were prepared by WorleyParsons. These systems include the Rectisol Section, Claus Section and Gas Liquor Treatment Section. These estimates were developed on the basis of engineering defined equipment lists that defined

each of the major components for each system. The costs were based on a US Gulf Coast basis.

- The estimate for the gasifier system is based on the in-house BGL IGCC cost model utilized for previous IGCC evaluations, and includes the cost of a spare gasifier with feed lock, gas water wash vessel, slag quench vessel, and slag lock.
- Model costs are adjusted to the common June 2005 basis using Chemical Engineering Indices. Indices generally reflect the recent actual increases in steel price. However, the steel commodity prices are very volatile and significant changes occur on a monthly basis. Depending on the perceived long-term impact of these changes, special consideration of the impact is necessary.
- Construction of the project is based on the owner purchasing equipment, retaining the services of an engineering/design/construction manager firm and executing construction with multiple contracts.
- Construction cost is based on a 40 hour workweek with spot overtime.
- Equipment costs are based on use of United States equipment vendors.
- Contingency was evaluated with varying rates for each estimate line item depending on the risk for cost growth. The resulting contingency rate for each estimate is the weighted composite value.
- Estimate includes the following:
    - Syngas production plant battery limits
    - All identified process equipment necessary for the production of syngas
    - Wet/Dry cooling tower and circulating water system
    - Auxiliary transformer, switchgear and MCC's to support the plant auxiliary power load
    - DCS system for plant control
    - Miscellaneous systems and equipment necessary to support the major process systems
    - Site development and buildings
    - Professional services for the engineering and design of the syngas balance of plant.

- Professional services for construction management of the syngas plant.
- Professional services and craft labor in support of plant startup but not the costs of owner's plant startup.
- An allowance for startup spare parts but not the cost of initial spare part inventory.
- An allowance for Builders Risk and General Liability Insurance

♦ Estimates do not include the following:

- Capital cost for the air separation unit (the facility is considered to be off-site and the cost of oxygen and nitrogen are recognized in the annual O&M cost estimate and include the impact of utility costs).
- Sales tax
- Escalation
- Owners costs such as for licenses, permits, land, etc.

VI.15.2.2 Operating and Maintenance Cost Basis and Assumptions

Annual Operating and Maintenance (O&M) costs are based on and include the following:

♦ O&M estimate is the average annual cost.

♦ Evaluation Annual Plant Capacity factor is 95%.

♦ Cost of fuel is included.

♦ Average operator labor rate is $32.00

♦ Operator labor burden is 30% of base labor, and Overhead charge is 25% of all plant labor.

♦ Average annual maintenance material and labor

♦ Consumables costs are based on the expected full load consumption (resulting costs are adjusted for the stated plant capacity factor) and corresponding unit costs for the following:

- Water Makeup
- Water Treatment Chemicals
- Flux (limestone)
- Oxygen

- Methanol
- Natural Gas
- Nitrogen
- Waste Disposal
- Sulfur By-Product Credit

VI.15.2.3 Results

VI.15.2.3.1 Total Indicative Price

A summary of the capital cost estimates by major account is shown in Exhibit VI.15-1. The total capital cost of the syngas production plant is estimated to be $118.7 million, about $5,200/MMBtu/day of syngas product. The estimated capital cost does not include financing, escalation, or owner's costs, as noted in the capital cost basis and assumptions in VI.15.2.1.

VI.15.2.3.2 Annual Operating and Maintenance Costs

The estimated annual operating costs, excluding annualized capital costs, are summarized in Exhibit VI.15-2. The annual fixed operating costs are estimated to be about $6 million, about $260/MMBtu/day of export syngas based on a syngas production rate of about 952 MMBtu/hr (HHV). The annual non-fuel variable operating costs are estimated to total about $12.3 million, about $1.55/MMBtu of export syngas product based on a plant capacity factor of 95%. The annual fuel operating cost is estimated to be $13.1 million, or about $1.65/MMBtu of export syngas product. The total annual variable operating cost, including fuel cost, is thus estimated to be about $3.20/MMBtu of syngas product. If the unit fixed annual operating cost is put on an annual export syngas production basis at 95% capacity factor, then the estimated total annual operating cost, fixed and variable, is about $3.95/MMBtu.

Exhibit VI.15-1 Summary of Capital Cost Estimate

CLIENT: DOE
PROJECT: Industrial Size Gasification
CASE: BGL 1000 Syngas w/ Tar Recycle & Spare-III#6

7/10/2006 Cost Base (Jun.) 2005

Prepared by: G. Hinds Checked by:L. L. Pinkerton

CODE	ITEM		EQUIPMENT	MATERIAL	LABOR	TOTAL	COMMENTS
							22,848 MMBtu/day
1.0	Coal & Sorbent Handling		$ 913,985	$ 111,057	$ 404,090	$ 1,429,132	Coal & Flux Receiving & Reclaim
2.0	Coal & Sorbent Prep & Feed		$ 1,628,788	$ 128,284	$ 600,765	$ 2,357,837	Coal & Flux Storage & Feed to Gasifier
3.0	Misc. BOP Systems		$ 731,374	$ 444,117	$ 444,398	$ 1,619,890	
4.0	Gasifier & Accessories		$ 18,132,336	$ 642,216	$ 11,367,299	$ 30,141,850	Gasifier, Gas Cooling, Slag Quench, Tar Separation
4.0	ASU Plant		$ -	$ -	$ -	$ -	Off-Site (see O&M)
5.0	Gas Cleanup		$ 19,384,063	$ 4,918,095	$ 9,712,246	$ 34,014,404	Rectisol, Claus & Gas Liquor Treating
5.0	CO2 Removal & Compression		$ -	$ -	$ -	$ -	
6.0	Combustion Turbine Plant		$ -	$ -	$ -	$ -	
7.0	HRSG, Ducting & Stack		$ -	$ -	$ -	$ -	
8.0	Steam Turbine Generator		$ -	$ 186,871	$ 113,187	$ 300,058	Steam Piping System
9.0	Cooling Water System		$ 928,242	$ 575,636	$ 479,993	$ 1,983,871	Cooling Tower Cooling & Component Cooling
10.0	Ash Handling System		$ 804,136	$ 294,871	$ 312,194	$ 1,411,202	Slag Conveyor & Truck Feed
11.0	Accessory Electric Plant		$ 2,189,662	$ 1,053,437	$ 2,019,357	$ 5,262,456	
12.0	Instrumentation & Control		$ 2,445,502	$ 276,391	$ 951,747	$ 3,673,640	
13.0	Improvements to Site		$ 217,145	$ 255,977	$ 568,091	$ 1,041,213	
14.0	Buildings & Structures		$ -	$ 983,697	$ 628,015	$ 1,611,712	
	TOTAL FIELD COST		$ 47,375,232	$ 9,870,648	$ 27,601,383	$ 84,847,263	
	PROFESSIONAL SERVICES:		$ 8,484,700	$ -	$ -	$ 8,484,700	Includes Engineering, Design & CM
	OTHER COSTS (LESS Escalation)		$ 4,500,000	$ -	$ 200,000	$ 4,700,000	Freight, Heavy Haul, Startup Spares & Insurances
	ESCALATION		$ -	$ -	$ -	$ -	Excluded
							$/MMBtu/day
	TOTAL (w/o CONTINGENCY)		$ 60,359,932	$ 9,870,648	$ 27,801,383	$ 98,031,963	4,290
	CONTINGENCY					$ 20,685,037	
							$/MMBtu/day
	TOTAL					$ 118,717,000	5,200

Exhibit VI.15-2 Estimated Annual O&M Costs

INITIAL & ANNUAL O&M EXPENSES

Cost Base (Jun.) 2005

BGL 1000 Syngas w/ Tar Recycle & Spare-II#6

Heat Rate-net(Btu/kWh):

Plant Output: Syngas (MMBtu/hr) 952.0 Hydrogen (MMBtu/hr) 0

MWe-net: 0.0

Capacity Factor: (%): 95

OPERATING & MAINTENANCE LABOR

Operating Labor

Operating Labor Rate(base):	32.00	$/hour
Operating Labor Burden:	30.00	% of base
Labor O-H Charge Rate:	25.00	% of labor

Operating Labor Requirements(O.J.)per Shift:	1 unit/mod.	Total Plant
Skilled Operator	2.0	2.0
Operator	5.0	5.0
Foreman	1.0	1.0
Lab Tech's, etc.	1.0	1.0
TOTAL-O.J.'s	9.0	9.0

	Annual Cost $	Annual Unit Cost $/MMBtu
Annual Operating Labor Cost	$3,279,744	0.414
Maintenance Labor Cost	$1,484,577	0.187
Administrative & Support Labor	$1,191,080	0.150
TOTAL FIXED OPERATING COSTS	**$5,955,401**	**0.752**

VARIABLE OPERATING COSTS

						$/MMBtu
Maintenance Material Cost					$2,226,865	0.281
Consumables	**Consumption Initial**	**Consumption /Day**	**Unit Cost**	**Initial Cost**		
Water(/1000 gallons)		380	0.43		$56,604	0.007
Chemicals						
MU & WT Chem.(lbs)	33,992	1,133	0.16	$5,293	$61,182	0.008
Carbon (Mercury Removal) (lb.)			6.50			
COS Catalyst (lb)			0.60			
Flux (limestone-ton)	879	29.3	20.00	$17,582	$203,223	0.026
O2 (ton)		576.6	34.50		$6,898,224	0.871
Methanol (ton)	12	0.4	282.00	$3,384	$39,113	0.005
Subtotal Chemicals				$26,260	$7,201,743	0.909
Other						
Supplemental Fuel(mmBtu)		75.4	7.00		$183,060	0.023
Gases,N2 (ton)	1,587	52.9	17.00		$311,879	0.039
Auxiliary Power (MW/hr)		123.3	40.00		$1,710,337	0.216
Subtotal Other					$2,205,277	0.278
Subtotal-Other						
Waste Disposal						
Spent Mercury Catalyst (lb.)			0.25			
Flyash (ton)						
Bottom Ash/Slag (ton)		165.4	16.00		$917,883	0.116
Subtotal-Waste Disposal					$917,883	0.116
By-products & Emissions						
Sulfur(tons)		36.0	25.00		($311,971)	-0.039
Subtotal By-Products					($311,971)	-0.039
TOTAL VARIABLE OPERATING COSTS					**$12,296,402**	**1.552**
Fuel(ton)	34,347	1,145	33.00	$1,133,458	**$13,100,886**	**1.654**

This page intentionally left blank

VI.16 CONCLUSIONS

A conceptual design and cost estimate of a reference syngas production plant using a single operating BGL 1000 Gasifier was performed. The syngas cleanup system consists of a Rectisol process for removal of sulfur and other contaminants from the syngas and a Claus process for converting H_2S in the syngas to elemental sulfur. The estimated performance characteristics of the plant are as follows:

- Coal Consumption: 95,409 lb/hr
- Coal Thermal Input (HHV): 1,118 MMBtu/hr
- Limestone Consumption: 2,442 lb/hr
- Oxygen Consumption: 48,623 lb/hr
- Nitrogen Consumption: 4,409 lb/hr
- Net Electric Power Consumption: 5,140 kWe
- Exported Syngas Product: 151,400 lb/hr (2.82 million scf/hr)
  952 MMBtu/hr
- Syngas Higher Heating Value: 6,291 Btu/lb (337 Btu/scf)
- Syngas Lower Heating Value: 5,894 Btu/lb (316 Btu/scf)
- Elemental Sulfur Co-product: 3,000 lb/hr
- Slag Production: 13,787 lb/hr
- Gasification System Cold Gas Efficiency: 89.3%
- Net Syngas Production Plant Thermal Efficiency: 74.7%

The study was based on purchase of oxygen and nitrogen from a gas supplier who owns and operates an ASU on-site. The gas supplier is responsible for utilities for the ASU. For the capacity required for the syngas production plant, the electric power consumption of the ASU is estimated by a supplier to be about 9,700 kWe.

The capital cost of the Syngas Production Reference Plant is estimated to total about $118.7 million in June 2005 dollars, about $5,200/MMBtu/day of syngas product, including professional services and contingency, but not including owner's costs. The annual fixed O&M cost is estimated to be about $6 million ($260/MMBtu/day of product). The annual variable O&M cost is estimated to total about $25.4 million (about $3.20/MMBtu of syngas product), with the non-fuel variable O&M cost portion being about $12.3 million, or $1.55/MMBtu of syngas product, and the fuel cost portion being about $13.1 million, or about $1.65/MMBtu or syngas product.

VI.17 MAJOR EQUIPMENT LIST

VI.17.1 GASIFIER PROCESS PACKAGE

Coal / Limestone Feed Lock
Quantity 2
Carbon Steel
Nominal vessel diameter: 8 ft.
Nominal vessel height: 16 ft.
Nominal pressure: 500 psia

Gasifier
Quantity 2
Carbon Steel, Jacketed Shell
Nominal shell diameter: 14 ft.
Nominal height: 44 ft.
Nominal pressure: 500 psia
Refractory
Oxygen/Steam Injector
Tar/oil injector

Slag Quench Vessel
Quantity 2
Carbon Steel Vessel
Nominal vessel diameter: 12 ft.
Nominal vessel height: 17 ft.
Nominal pressure: 500 psia

Slag Lock
Quantity 2
Carbon Steel Vessel
Nominal vessel diameter: 9 ft.
Nominal vessel height: 14 ft.
Nominal pressure: 500 psia

Wash Cooler
Quantity 2
Nominal diameter: 6 ft.
Nominal height: 20 ft.

Waste Heat Exchanger (Primary HX)
Quantity 1
Nominal pressure: 500 psia
Temperature: 300°F – 400°F
Outlet steam pressure: 75 psia
Outlet steam temperature: 308°F
Duty: 0.17 MMBtu/hr

Syngas Cooling System
Quantity 1
Shell and tube (gas tubeside)
Nominal pressure: 340 psia
Temperature: 95°F – 315°F
- Syngas Cooler 1
- Syngas Cooler 2
- Syngas Cooler 3

Liquor Separation and Tar Recycle System
Quantity 1
- Liquor Coolers
- Tar Separator
- Condensate Separator
- Liquid Products Tank

VI.17.2 WASTE WATER TREATMENT SYSTEM

Towers

Solvent Extraction Column

Type	Agitated column
Quantity	1
Diameter	2 ft, 6 inch
Height	30 ft
Number of Trays	20
Pressure	30 psia
Temperature	150 F
Materials of Construction	316 Stainless

Solvent Recovery Column

Type	Packed column
Quantity	1
Diameter	2 ft, 4 inch
Height	30 ft
Number of Trays	15
Pressure	30 psia
Temperature	500 F
Materials of Construction	316 Stainless

Sour Gas Scrubber

Type	Packed column
Quantity	1
Diameter	2 ft
Height	30 ft
Number of Trays	15
Pressure	50 psia
Temperature	300 F
Materials of Construction	316 Stainless

Process Reactors

Biological Reactor

Type	Vertical
Quantity	1
Diameter	16 ft
Height	20 ft
Pressure	15 psia
Temperature	100 F
Materials of Construction	Rubber-lined carbon steel

Tanks

Clean Solvent Storage Tank

Type	Horizontal
Quantity	1
Diameter	3 ft
Length	9 ft
Pressure	20 psia
Temperature	200 F
Materials of Construction	Carbon Steel

Caustic Storage Drum

Type	Horizontal
Quantity	1
Diameter	4 ft
Length	12 ft
Pressure	20 psia
Temperature	100 F
Materials of Construction	Carbon Steel

Heat Exchangers

Solvent Column Reboiler

Type	Shell and tube
Quantity	1
Fluid (Hot/Cold)	MP Steam / Column Bottoms
Duty	0.42 MMBtu/hr
Area	63 ft2
Pressure	30 psia
Temperature	500 F
Materials of Construction	Carbon Steel

Solvent Column Condenser

Type	Shell and Tube
Quantity	1
Fluid (Hot/Cold)	Column Overheads / Cooling Water
Duty	0.27 MMBtu/hr
Area	42 ft2
Pressure	30 psia
Temperature	400 F
Materials of Construction	316 Stainless

Sour Gas Column Reboiler

Type	Shell and Tube
Quantity	1
Fluid (Hot/Cold)	LP Steam / Column Bottoms
Duty	0.312 MMBtu/hr
Area	120 ft2
Pressure	50 psia
Temperature	400 F
Materials of Construction	Carbon Steel

Sour Gas Column Condenser

Type	Shell and Tube
Quantity	1
Fluid (Hot/Cold)	Column Overheads / Cooling Water
Duty	0.1 MMBtu/hr
Area	17 ft2
Pressure	50 psia
Temperature	300 F
Materials of Construction	316 Stainless

Compressors

Air Compressor

Type	Centrifugal
Quantity	1
Fluid	Air
Work	70 hp
Pressure Rise	5 psi
Outlet Pressure	20 psia
Temperature	200 F
Materials of Construction	Carbon Steel

Miscellaneous

Water Clarifier

Quantity	1 operating
Fluid	10% TSS Water @ 30 gpm
Temperature	100 F

VI.17.3 RECTISOL SYSTEM

Towers

Rectisol Absorber

Type	Tray column
Quantity	1
Diameter	7 ft
Height	100 ft
Number of Trays	50
Pressure	330 psia
Temperature	-60 to 10 F
Materials of Construction	316 Stainless

Flash Regenerator

Type	Tray column
Quantity	1
Diameter	3 ft
Height	38 ft
Number of Trays	17
Pressure	330 psia
Temperature	-35 to 50 F
Materials of Construction	316 Internals, Carbon Steel

Hot Regenerator

Type	Tray column
Quantity	1
Diameter	4 ft
Height	30 ft
Number of Ideal Stages	15
Pressure	50 psia
Temperature	100-500 F
Materials of Construction	316 Stainless

Methanol Stripper

Type	Packed column
Quantity	1
Diameter	3 ft, 6 inches
Height	25 ft
Number of Ideal Stages	20
Pressure	80 psia
Temperature	300 F
Materials of Construction	Carbon steel shell
Packing Material	1 inch ceramic Raschig rings

Package Units

Refrigeration System

Refrigerant	Propylene
Quantity	1
Duty	7 MMBtu/hr (580 ton)

Tanks

Pre-wash Flash Tank

Type	Vertical
Quantity	1
Diameter	1 ft, 6 inch
Total Vessel Height	5 ft
Liquid Level Height	2 ft
Pressure	50 psia
Temperature	100 F
Materials of Construction	Carbon Steel

BTX Overflow Decanter

Type	Horizontal, Skimmer Weir
Quantity	1
Height	2 ft
Length	4 ft
Width	2 ft
Pressure	20 psia
Temperature	50 F
Materials of Construction	Carbon Steel

Heat Exchangers

Feed Gas Cooler

Type	Shell and Tube
Quantity	1
Fluid (Hot/Cold)	Raw Syngas / Treated Syngas
Duty	5.2 MMBtu/hr
Area	16,827 ft2
Pressure	400 psia
Temperature	-20 to 100 F
Materials of Construction	Carbon Steel

Treated Gas Exchanger

Type	Shell and Tube
Quantity	1
Fluid (Hot/Cold)	Absorber Bottoms / Treated Syngas
Duty	2.6 MMBtu/hr
Area	9,869 ft2
Pressure	400 psia
Temperature	-60 to 0 F
Materials of Construction	316 Stainless

Inter-stage Wash Cooler

Type	Shell and Tube
Quantity	1
Fluid (Hot/Cold)	Methanol / Propylene
Duty	4.3 MMBtu/hr
Area	3,222 ft2
Pressure	400 psia
Temperature	-60 F
Materials of Construction	316 Stainless

Lean Methanol Cooler

Type	Shell and Tube
Quantity	1
Fluid (Hot/Cold)	Methanol / Propylene
Duty	17.5 MMBtu/hr
Area	4,680 ft2
Pressure	400 psia
Temperature	-60 F
Materials of Construction	316 Stainless

Heat Exchangers (continued)

Hot Regenerator Overheads Condenser

Type	Shell and Tube
Quantity	1
Fluid (Hot/Cold)	Overheads / Cooling Water
Duty	0.9 MMBtu/hr
Area	436 ft2
Pressure	100 psia
Temperature	100 F
Materials of Construction	316 Stainless

Hot Regenerator Reboiler

Type	Shell and Tube
Quantity	1
Fluid (Hot/Cold)	LP Steam / Hot Regenerator Bottoms
Duty	5.3 MMBtu/hr
Area	785 ft2
Pressure	200 psia
Temperature	300 F
Materials of Construction	Carbon Steel

Methanol Stripper Feed Heater

Type	Shell and Tube
Quantity	1
Fluid (Hot/Cold)	LP Steam / Column Feed
Duty	0.12 MMBtu/hr
Area	20 ft2
Pressure	100 psia
Temperature	200 F
Materials of Construction	Carbon Steel

Methanol Stripper Overheads Condenser

Type	Shell and Tube
Quantity	1
Fluid (Hot/Cold)	Overheads / Cooling Water
Duty	2.7 MMBtu/hr
Area	224 ft2
Pressure	100 psia
Temperature	200 F
Materials of Construction	Carbon Steel

Heat Exchangers (continued)

Methanol Stripper Reboiler

Type	Shell and Tube
Quantity	1
Fluid (Hot/Cold)	LP Steam / Column Bottoms
Duty	2.9 MMBtu/hr
Area	753 ft2
Pressure	100 psia
Temperature	300 F
Materials of Construction	Carbon Steel
Temperature	300 F
Materials of Construction	316 SS

Compressors

Flash Regenerator Compressor

Type	Centrifugal
Quantity	1
Fluid	Syngas
Work	600 hp
Pressure Rise	280 psi
Outlet Pressure	300 psia
Temperature	500 F
Materials of Construction	Carbon Steel

Pumps

Lean Methanol Pump

Type	Centrifugal
Quantity	1 operating / 1 spare
Fluid	Methanol @ 800 gpm
Work	200 hp
Pressure Rise	200 psi
Outlet Pressure	350 psia
Temperature	300 F
Materials of Construction	316 clad on Carbon Steel

Rich Methanol Pump

Type	Centrifugal
Quantity	1 operating / 1 spare
Fluid	Methanol @ 800 gpm
Work	100 hp
Pressure Rise	100 psi
Outlet Pressure	250 psia
Temperature	100 F
Materials of Construction	316 clad on Carbon Steel

Hot Regenerator Bottoms Pump

Type	Centrifugal
Quantity	1 operating / 1 spare
Fluid	Methanol @ 50 gpm
Work	30 hp
Pressure Rise	23 psi
Outlet Pressure	50 psia
Temperature	120 F
Materials of Construction	Carbon Steel

BTX Bottoms Pump

Type	Centrifugal
Quantity	1 operating / 1 spare
Fluid	Methanol @ 10 gpm
Work	20 hp
Pressure Rise	30 psi
Outlet Pressure	80 psia
Temperature	100 F
Materials of Construction	Carbon Steel

Pumps (continued)

Methanol Stripper Pump

Type	Centrifugal
Quantity	1 operating / 1 spare
Fluid	Methanol @ 30 gpm
Work	10 hp
Pressure Rise	5 psi
Outlet Pressure	40 psia
Temperature	150 F
Materials of Construction	Carbon Steel

Methanol Stripper Bottoms Pump

Type	Centrifugal
Quantity	1 operating / 1 spare
Fluid	Methanol @ 30 gpm
Work	10 hp
Pressure Rise	5 psi
Outlet Pressure	40 psia
Temperature	150 F
Materials of Construction	Carbon Steel

VI.17.4 CLAUS SYSTEM

Towers

Water Wash Tower

Type	Tray column
Quantity	1
Diameter	5 ft
Height	40 ft
Number of Trays	15
Pressure	30 psia
Temperature	150 F
Materials of Construction	316 Stainless

Process Reactors

Claus Furnace

Type	Horizontal
Quantity	1
Diameter	5 ft
Height	15 ft
Pressure	50 psia
Temperature	2,500 F
Catalyst Volume	N/A
Catalyst Life	None
Materials of Construction	Refractory-lined carbon steel

Claus Sulfur Converter No. 1

Type	Fixed-bed
Quantity	1
Diameter	5 ft
Height	14 ft
Pressure	30 psia
Temperature	600 F
Catalyst Volume	200 ft3
Catalyst Life	1 year
Materials of Construction	Carbon Steel

Claus Sulfur Converter No. 2

Type	Fixed-bed
Quantity	1
Diameter	5 ft
Height	14 ft
Pressure	30 psia
Temperature	600 F
Catalyst Volume	200 ft3
Catalyst Life	1 year
Materials of Construction	Carbon Steel

Hydrogenation Reactor

Type	Fixed-bed
Quantity	1
Diameter	4 ft, 6 inch
Height	14 ft
Pressure	30 psia
Temperature	600 F
Catalyst Volume	160 ft3
Catalyst Life	1 year
Materials of Construction	Carbon Steel

Tanks

Medium Pressure Steam Drum

Type	Horizontal
Quantity	1
Diameter	8 ft
Length	24 ft
Pressure	700 psia
Temperature	500 F
Materials of Construction	Carbon Steel

Low Pressure Steam Drum

Type	Horizontal
Quantity	1
Diameter	4 ft
Length	12 ft
Pressure	120 psia
Temperature	500 F
Materials of Construction	Carbon Steel

Sulfur Storage Pit

Type	In-ground pit
Quantity	1
Height	10 ft
Length	12 ft
Width	7 ft
Pressure	15 psia
Temperature	300 F
Materials of Construction	Concrete, epoxy lined

Sulfur Storage Tank

Type	Vertical
Quantity	1
Diameter	40 ft
Height	42 ft
Pressure	20 psia
Temperature	500 F
Materials of Construction	Carbon Steel, epoxy lined

Heat Exchangers

Waste Heat Boiler

Type	Fired Tube
Quantity	1
Fluid (Hot/Cold)	Claus gas / MP Steam
Duty	6.03 MMBtu/hr
Area	451 ft2
Pressure	600 psia
Temperature	1,600 F
Materials of Construction	Stainless Steel

Acid Gas Heater

Type	Shell and Tube
Quantity	1
Fluid (Hot/Cold)	MP Steam / Acid Gas
Duty	1.16 MMBtu/hr
Area	352 ft2
Pressure	600 psia
Temperature	600 F
Materials of Construction	316 Stainless

Oxidant Heater

Type	Shell and Tube
Quantity	1
Fluid (Hot/Cold)	MP Steam / Air
Duty	0.312 MMBtu/hr
Area	128 ft2
Pressure	600 psia
Temperature	600 F
Materials of Construction	Carbon Steel

Sour Gas Heater

Type	Shell and Tube
Quantity	1
Fluid (Hot/Cold)	MP Steam / Sour Gas
Duty	0.1 MMBtu/hr
Area	30 ft2
Pressure	600 psia
Temperature	600 F
Materials of Construction	316 Stainless

Heat Exchangers (continued)

Claus Reactor No. 1 Preheater

Type	Shell and Tube
Quantity	1
Fluid (Hot/Cold)	MP Steam / Claus Gas
Duty	0.711 MMBtu/hr
Area	448 ft2
Pressure	600 psia
Temperature	600 F
Materials of Construction	Carbon Steel

Claus Reactor No. 2 Preheater

Type	Shell and Tube
Quantity	1
Fluid (Hot/Cold)	MP Steam / Claus Gas
Duty	0.42 MMBtu/hr
Area	161 ft2
Pressure	600 psia
Temperature	600 F
Materials of Construction	Carbon Steel

Hydrogenation Reactor Preheater

Type	Shell and Tube
Quantity	1
Fluid (Hot/Cold)	MP Steam / Claus Tail Gas
Duty	1.3 MMBtu/hr
Area	590 ft2
Pressure	600 psia
Temperature	600 F
Materials of Construction	Carbon Steel

Hydrogenation Reactor Cooler

Type	Shell and Tube
Quantity	1
Fluid (Hot/Cold)	Claus Tail Gas / LP Steam
Duty	1.1 MMBtu/hr
Area	386 ft2
Pressure	100 psia
Temperature	400 F
Materials of Construction	Carbon Steel

Heat Exchangers (continued)

Sulfur Condenser No. 1

Type	Shell and Tube
Quantity	1
Fluid (Hot/Cold)	Claus Gas-Sulfur / LP Steam
Duty	1.71 MMBtu/hr
Area	453 ft2
Pressure	100 psia
Temperature	400 F
Materials of Construction	316

Sulfur Condenser No. 2

Type	Shell and Tube
Quantity	1
Fluid (Hot/Cold)	Claus Gas-Sulfur / LP Steam
Duty	1.44 MMBtu/hr
Area	627 ft2
Pressure	100 psia
Temperature	400 F
Materials of Construction	316

Sulfur Condenser No. 3

Type	Shell and Tube
Quantity	1
Fluid (Hot/Cold)	Claus Gas-Sulfur / LP Steam
Duty	0.77 MMBtu/hr
Area	453 ft2
Pressure	100 psia
Temperature	400 F
Materials of Construction	316

Sulfur Storage Heater

Type	Bayonet
Quantity	1
Fluid (Hot/Cold)	MP Steam / Molten Sulfur
Duty	10 MMBtu/hr
Area	500 ft2
Pressure	600 psia
Temperature	400 F
Materials of Construction	316

Compressors

Air Compressor	
Type	Centrifugal
Quantity	1
Fluid	Air
Work	130 hp
Pressure Rise	20 psi
Outlet Pressure	35 psia
Temperature	300 F
Materials of Construction	Carbon Steel

Pumps

Medium Pressure BFW Pump

Type	Centrifugal
Quantity	1 operating / 1 spare
Fluid	Water @ 150 gpm
Work	100 hp
Pressure Rise	30 psi
Outlet Pressure	700 psia
Temperature	600 F
Materials of Construction	Carbon Steel

Low Pressure BFW Pump

Type	Centrifugal
Quantity	1 operating / 1 spare
Fluid	Water @ 100 gpm
Work	50 hp
Pressure Rise	30 psi
Outlet Pressure	100 psia
Temperature	400 F
Materials of Construction	Carbon Steel

Wash Water Tower Pump

Type	Centrifugal
Quantity	1 operating / 1 spare
Fluid	Water @ 500 gpm
Work	30 hp
Pressure Rise	10 psi
Outlet Pressure	30 psia
Temperature	120 F
Materials of Construction	Carbon Steel

Sulfur Pump

Type	Centrifugal
Quantity	1 operating / 1 spare
Fluid	Molten Sulfur @ 50 gpm
Work	20 hp
Pressure Rise	5 psi
Outlet Pressure	20 psia
Temperature	400 F
Materials of Construction	316 Stainless Steel

Skids

Molten Sulfur Truck Loading Skid

Quantity	1 operating
Fluid	Molten Sulfur @ 200 gpm
Temperature	300 F

VI.17.5 STEAM SYSTEM

Syngas-fired boiler: 46 MMBtu/hr
Deaerator
Flash Tank
Low Pressure Steam Header
Medium Pressure Steam Header

VI.17.6 CIRCULATING WATER SYSTEM

Plume-abated mechanical draft cooling tower
- Cooling Duty: 67 MMBtu/hr
- Circulating water flow rate: 7,435 gpm

Pumps

VI.17.7 COAL AND LIMESTONE RECEIVING AND HANDLING SYSTEMS

Item No.	Equipment	Quantity	Flow Rate TPH	Specs	weight	Comments
	Coal handling system					
1	Truck Scale	1		200,000 lb, 80'x11', 8 load cells	33,800Lb	
2	Coal Reclaim Feeder	1	250	40'-0" lg		
3	Vib. Screen	1	250	8' wx16 lg		
4	Coal Silos Loading HAC	1	250			
5	Coal Scale	1	250			
6	Magnetic Separator	1	250	42" w x 66" lg x 30" h		with rectifier
7	Overs Conveyor (Optional)					
8	Reversible Belt Conveyor	1	250			
9	Coal Silo A	1		430T, 32' dia. X 70' high		
10	Coal Silo B	1		430T, 32' dia. X 70' high		
11	Coal Maint Gates A	1		24" sq. manual		
12	Coal Maint Gates B	1		24" sq. manual		
13	Coal Diverter Gate A	1		24" sq. Pneumatic		
14	Coal Diverter Gate B	1		24" sq. Pneumatic		
15	Coal Silo discharge feeder A	1		24"x 44'-0"		
16	Coal Silo discharge feeder B	1	50	24"X 48'-0"		
	Limestone handling system					
17	Loading Hopper	1		1000 lbs 5'sq.x3' high		
18	Limestone Reclaim Feeder	1	10	12" dia. X 10'-0"		
19	Limestone Silos Loading HAC	1	10			
20	Limestone Scale	1				
21	limestone Silo	1		22T, 12' dia. X 28'		
22	Limestone Maint Gate	1		24" sq. manual		
23	Limestone Diverter Gate	1		24" sq. Pneumatic		
24	Limestone Silo discharge feeder A	1		12" x 12'-0"		
25	Limestone Silo discharge feeder B	1		12" x 18'-0"		
	Coal/Limestone					
26	Gasifier Feed HAC A	1				
27	Gasifier Feed HAC B	1				
28	Weigh Hopper	1		50T, 12' dia. 18'		
29	Weigh Hopper Load Cells	4				Add 4 Load cells
30	Loss weigh Hopper	1		7T, 6' dia. X 10'		

Industrial Size Gasification for Syngas, Substitute Natural Gas and Power Production

Section VII - Case 1AH Conceptual Design Description
Syngas and H_2 Co-Production Reference Plant – Illinois #6 Coal

DOE/NETL-401 / 040607

FR-53769211

April 2007

Disclaimer

This report was prepared as an account of work sponsored by an agency of the United States Government. Neither the United States Government nor any agency thereof, nor any of their employees, makes any warranty, express or implied, or assumes any legal liability or responsibility for the accuracy, completeness, or usefulness of any information, apparatus, product, or process disclosed, or represents that its use would not infringe privately owned rights. Reference therein to any specific commercial product, process, or service by trade name, trademark, manufacturer, or otherwise does not necessarily constitute or imply its endorsement, recommendation, or favoring by the United States Government or any agency thereof. The views and opinions of authors expressed therein do not necessarily state or reflect those of the United States Government or any agency thereof.

Industrial Size Gasification for Syngas, Substitute Natural Gas and Power Production

Section VII - Case 1AH Conceptual Design Description
Syngas and H_2 Co-Production Reference Plant – Illinois #6 Coal

---

DOE/NETL-401 / 040607

FR-53769211

April 2007

NETL Contact: DE-AC26-04NT41817.401.01.05.002

Office of Systems Analysis and Planning Support

Prepared by:

Leonard M. Bartone, Jr., P.E.
Jay White
WorleyParsons Group Inc.

Research and Development Solutions, LLC.

National Energy Technology Laboratory
www.netl.doe.gov

This page is intentionally left blank

SECTION *VII* TABLE OF CONTENTS

Section VII Table of Contents ..... ***VII-i***

Section VII List of Exhibits ..... ***VII-iii***

Terminology ..... ***VII-v***

Acknowledgements ..... ***VII-vii***

VII.1 Summary ***VII-1***

VII.2 System Description and Performance ***VII-5***

VII.2.1 System Description ..... **VII 5**

VII.2.2 Heat & Material Balance, Performance Estimates, and Emissions Estimates **VII-8**

VII.3 Plot Plan and Site Layout ***VII-39***

VII.4 Solids Handling Systems Descriptions ***VII-43***

VII.4.1 Coal Receiving, Storage, and Handling **VII-43**

VII.4.1.1 Coal Receiving and Storage VII-43

VII.4.1.2 Coal Handling and Preparation System VII-43

VII.4.2 Limestone Receiving, Storage, and Handling **VII-44**

VII.4.2.1 Limestone Receiving and Storage VII-44

VII.4.2.2 Limestone Handling and Preparation System VII-45

VII.4.3 Coal/Limestone Gasifier Delivery System **VII-45**

VII.4.4 Slag Handling **VII-52**

VII.5 Gasifier Process Package Description ***VII-53***

VII.5.1 Gasifier **VII-53**

VII.5.2 Coal/Limestone Feed System **VII-55**

VII.5.3 Slag Removal System **VII-56**

VII.5.4 Syngas Wash Cooler **VII-56**

VII.5.5 Waste Heat Exchanger (Primary Heat Exchanger) **VII-57**

VII.5.6 Syngas Cooling System **VII-57**

VII.5.7 Gas Liquor Separation and Tar/Oil Reinjection System **VII-57**

VII.6 Syngas Cleanup System Description VII-59
VII.6.1 Rectisol Process Description VII-59
VII.6.2 Claus Process Description VII-61
VII.7 Hydrogen Production System VII-63
VII.8 Waste Water Treatment System Description VII-65
VII.9 Process Steam System Description VII-67
VII.9.1 Steam Subsystem VII-67
VII.9.2 Syngas-fired Boiler Subsystem VII-67
VII.10 Flare System Description VII-69
VII.11 Circulating Water System Description VII-71
VII.12 Process Water Supply System VII-73
VII.13 Instrumentation and Control System Description VII-75
VII.14 Electrical System Description VII-77
VII.15 Air Separation Unit Description VII-79
VII.16 Capital and O&M Cost Estimates VII-81
VII.16.1 Cost Estimating Approach VII-81
VII.16.2 Cost Basis and Assumptions VII-82
VII.16.2.1 Capital Cost Basis and Assumptions VII-82
VII.16.2.2 Operating and Maintenance Cost Basis and Assumptions VII-84
VII.16.2.3 Results VII-85
VII.17 Conclusion VII-89
VII.18 Major Equipment List VII-91
VII.18.1 Gasifier Process Package VII-91
VII.18.2 Waste Water Treatment System VII-93
VII.18.3 Rectisol System VII-97
VII.18.4 Claus System VII-104
VII.18.5 Hydrogen production System VII-113
VII.18.6 Steam System VII-113
VII.18.7 Circulating Water System VII-113
VII.18.8 Coal and Limestone Receiving and Handling Systems VII-114

SECTION VII LIST OF EXHIBITS

Exhibit VII.2-1 Sketch of Major Systems Comprising the Syngas and H_2 Co-Production Plant VII-7

Exhibit VII.2-2 Syngas/Hydrogen Co-Production Plant Estimated Performance Summary VII-10

Exhibit VII.2-3 Gasification and Gas Cooling Conceptual Process Flow Diagram VII-11

Exhibit VII.2-4 Rectisol System Conceptual Process Flow Diagram VII-13

Exhibit VII.2-5 Sulfur Production (Claus) System Conceptual Process Flow Diagram VII-15

Exhibit VII.2-6 Waste Water Treatment System Conceptual Process Flow Diagram VII-17

Exhibit VII.2-7 Steam System Conceptual Process Flow Diagram VII-19

Exhibit VII.2-8 Syngas-fired Boiler Conceptual Process Flow Diagram VII-21

Exhibit VII.2-9 Gasification and Gas Cooling Systems Estimated State Point Compositions and Conditions VII-23

Exhibit VII.2-10 Rectisol System Estimated State Point Compositions and Conditions VII-27

Exhibit VII.2-11 Sulfur Production (Claus) System Estimated State Point Compositions and Conditions VII-31

Exhibit VII.2-12 Waste Water Treatment System Estimated State Point Compositions and Conditions VII-33

Exhibit VII.2-13 Steam System Estimated State Point Compositions and Conditions VII-35

Exhibit VII.2-14 Syngas-fired Boiler System Estimated State Point Compositions and Conditions VII-37

Exhibit VII.3-1 Conceptual General Equipment Arrangement and Plot Plan for the Syngas and H_2 Co-production Reference Plant VII-40

Exhibit VII.3-2 Conceptual Elevation of Gasification Process Installation VII-41

Exhibit VII.4-1 Simplified Process Flow Diagram of Coal and Limestone Receiving, Storage, and Handling System.....VII-47

Exhibit VII.4-2 Coal and Limestone Storage and Handling Systems General Arrangement.....VII-48

Exhibit VII.4-3 Example of Snake Sandwich High Angle Conveyor by Dos Santos International for Feeding Coal Silos.....VII-49

Exhibit VII.4-4 Example of Snake Sandwich High Angle Conveyor by Dos Santos International for Feeding Limestone Silo VII-50

Exhibit VII.4-5 Example of Snake Sandwich High Angle Conveyor by Dos Santos International for Feeding Coal/Limestone to Gasifier Hopper.....VII-51

Exhibit VII.5-1 Schematic of Gasifier.....VII-54

Exhibit VII.11-1 Estimated Circulated Cooling Water Requirements.....VII-71

Exhibit VII.12-1 Estimated Process Makeup Water Requirements.....VII-73

Exhibit VII.14-1 Estimated Electric Power Requirements Summary.....VII-77

Exhibit VII.16-1 Summary of Capital Cost Estimate VII-86

Exhibit VII.16-2 Estimated Annual O&M Costs.....VII-87

TERMINOLOGY

ASU ..... Air separation unit
BEC ..... Bare erected cost
BGL ..... British Gas Lurgi
BTX ..... Benzene, Toluene, and Xylene
Btu ..... British thermal unit
ºC ..... Degrees Celsius
CC ..... Combined cycle
CO_2 ..... Carbon dioxide
CT, GT ..... Combustion turbine, synonym for gas turbine
DME ..... Dimethyl ether
DOE ..... Department of Energy (United States)
DRD ..... Design Requirements Document
EIA ..... Energy Information Administration
EPA ..... Environmental Protection Agency
°F ..... degrees Fahrenheit
FOF ..... Forced outage factor
FOR ..... Forced outage rate
fps ..... Feet per second
GE ..... General Electric
GT, CT ..... Gas turbine, synonym for combustion turbine
GWh ..... Gigawatt-hour
Hg ..... Mercury
HHV ..... Higher Heating Value
HRSG ..... Heat recovery steam generator
ID ..... Induced Draft (fan)
IDC ..... Interest during construction
IGCC ..... Integrated Gasification Combined Cycle
kW, kWe ..... Kilowatt electric
kWt ..... Kilowatt thermal
KWh ..... Kilowatt-hour
LHV ..... Lower heaving value
MDEA ..... Methyl diethanol amine
MIBK ..... Methyl Isobutyl Ketone
MW, MWe ..... Megawatt electrical
MW_t ..... Megawatt thermal
MWh ..... Megawatt-hour
NETL ..... DOE National Energy Technology Laboratory
NOx ..... Nitrous oxides
O_2 ..... Oxygen
O&M ..... Operating and Maintenance
P&W ..... Pratt & Whitney
Part. ..... Particulate emissions
POX ..... Partial Oxidation
psia ..... Pound/square inch (14.696 psi = 1 atm)
Q ..... Heat
QGESS ..... DOE/NETL Quality Guidelines for Energy System Studies
S ..... Sulfur content of fuel
scf ..... Standard cubic feet (based on 14.7psia/60°F)
SNCR ..... Selective non-catalytic reduction (for NOx control)
SNG ..... Substitute (Synthetic) Natural Gas
SO_2 ..... Sulfur dioxide
ST ..... Steam turbine
Syngas ..... Synthetic gas
T&D ..... Transmission and distribution (electrical)
t ..... Short ton (2,000 lbs)

TG .....Turbo-generator, (turbine-generator)
t/h .....Ton/hour
ton.....short ton, (2000 lbs)
t/h,tph .....Ton per hour
t/y,tpy.....Ton per year
TPC .....Total plant cost
US, U.S. .....United States
USEPA United States Environmental Protection Agency
USD, US$ ..... The United States Dollar
USDOE ..... United States Department of Energy
y, yr..... Year

ACKNOWLEDGEMENTS

This work was performed under DOE/NETL Contract No. DE-AM26-04NT41817 with Research and Development Solutions (RDS), LLC. WorleyParsons Group Inc. performed the work under a subcontract agreement with RDS, Subcontract No. 41817M2943.

The NETL Project Manager for this activity was Jeffrey Hoffmann.

The authors acknowledge the contributions of Victor Shellhorse and Bill Jones of Allied Syngas Corporation who were of considerable assistance in describing the characteristics of the British Gas Lurgi gasifier.

This page intentionally left blank

VII.1 SUMMARY

A feasibility study was performed to evaluate the technical and economic viability of coal-derived syngas and substitute natural gas (SNG) refueling of U.S. industries. The study includes the development of Reference Plant Conceptual Designs for the following application scenarios:

Case 1 – A coal-derived syngas production plant, based on the BGL 1000 gasifier being marketed in North America by Allied Syngas Corporation, with a nominal gasifier capacity of approximately 1000 million Btu/hr (MMBtu/hr) of synthesis gas.

Case 1A – Illinois #6 Coal as fuel, no hydrogen production

Case 1AH - Illinois #6 Coal as fuel, with hydrogen production

Case 1B – PRB Coal as fuel, no hydrogen production

Case 1BH - PRB Coal as fuel, with hydrogen production

Case 2 – A coal-derived SNG production plant, based on the BGL 1000 gasifier, for distribution through natural gas pipelines.

Case 2A – Illinois #6 Coal as fuel

Case 2B – PRB Coal as fuel

Case 3 – A gas turbine refueling configuration for a nominal 80 to 150 MWe (combined cycle equivalent) based on the Case 1 syngas configuration

Case 3A – Illinois #6 Coal as fuel

Case 3B – PRB Coal as fuel

Case 4 – A gas turbine refueling configuration for a nominal 80 to 150 MWe (combined cycle equivalent) based on the Case 3 SNG configuration

Case 4A – Illinois #6 Coal as fuel

Case 4B – PRB Coal as fuel

As part of this effort, a conceptual design and conceptual level capital and operating and maintenance cost estimates were developed for a Syngas and H_2 Co-production Reference Plant (Case 1AH) based on a single operating BGL 1000 gasifier. Allied Syngas Corporation and Envirotherm GmbH provided the gasifier performance and composition, temperature, and pressure of the syngas from the gasification process. A model of the gasification process integrated with the major supporting systems was developed using ASPEN Plus™ software, and mass and energy balance calculations were performed using the model. These data were used to define the functional requirements of the systems, performance estimates, and conceptual specifications of end-use equipment.

The design of the syngas production portion of this application is based on the Syngas Production Reference Plant conceptual design described in the Section VI Conceptual Design Description – Syngas Production Reference Plant – Illinois #6 Coal. There are minor modifications to the Syngas Production Reference Plant to improve the efficiency and minimize the cost for this application. The modifications are as follows:

- Addition of a Pressure Swing Adsorption (PSA) system to remove hydrogen from the sweet (clean) syngas from the Rectisol AGR system.
- Use of a portion of the syngas from the PSA as fuel in the syngas-fired boiler.

This Reference Plant conceptual design is based on the requirements defined in the Conceptual Design Requirements Document (DRD) in Section V of this report. The requirements include the following:

- Fuel for the gasifier is Illinois #6 coal. The composition of the coal is defined in the DRD.
- Limestone is used as the flux in the gasifier.
- The gasifier uses an oxidant that contains 99.5% O_2 purchased from a third party who owns and operates an air separation unit (ASU) on the site. Nitrogen for purging is also purchased from the third party.
- Electrical power is purchased from a local provider.

- The gasifier will produce a medium-Btu syngas
- A Rectisol process will be used for syngas cleanup.
- Elemental sulfur will be produced as a byproduct.
- A pressure swing adsorption (PSA) process will be used to remove "first pass" hydrogen from the syngas; that is, the syngas will not be subjected to a water-gas shift reaction before entering the PSA.
- The gasifier process package design will be provided by Envirotherm/Allied Syngas Corporation and will consist of all equipment/systems from the coal/flux feed lock to the inlet of the syngas acid gas removal (AGR) system and the discharge of the slag lock, including the tar/oil separation system and reinjection system.
- The gasifier process package will include a spare gasifier complete with coal/flux feed lock, gasifier, gas wash cooler, slag quench vessel, and slag lock vessel.
- Capital cost estimates for the gasifier process will be based on a WorleyParsons' in-house BGL IGCC cost model utilized for previous IGCC evaluations.
- Capital cost estimates for other systems will be developed by WorleyParsons based on a combination of WorleyParsons' in-house cost data and budgetary quotes provided by equipment supplies.
- Construction labor costs will be based on Gulf Coast non-union labor rates.

This report describes a conceptual design analysis, as well as conceptual level cost estimates that are based upon approximate methods. The data developed are not at sufficient depth to be used for design or construction purposes. Cost data are only suited for planning and budget estimation purposes, and are not of sufficient depth of detail to justify major capital investment.

The Reference Syngas and H2 Production Plant produces approximately 769 MMBtu/hr of medium Btu (360 Btu/scf) syngas product and about 184 MMBtu/hr of 99.9% purity H_2 for export to an industrial customer(s) from approximately 1,118 MMBtu/hr of Illinois #6 coal. The net plant thermal efficiency (as defined in the DOE Quality Guidelines for Energy System Studies for a fuel production plant) is about 74.7%.

The following sections provide descriptions of the major systems and equipment comprising the Syngas and H_2 Co-production Reference Plant, estimated performance characteristics, mass and energy balances of the major systems, and capital and operating cost estimates. Although the syngas production portion of the plant in this application is essentially the same as that described in the Conceptual Design Description – Syngas Production Reference Plant – Illinois #6 Coal, as previously noted, the description of the syngas production portion is also included in this document to provide a complete, stand-alone description of the Syngas and H_2 Co-production Reference Plant.

VII.2 SYSTEM DESCRIPTION AND PERFORMANCE

This section contains the system description, heat and mass balances, and performance estimates for the Syngas and H_2 Co-production Reference Plant.

VII.2.1 SYSTEM DESCRIPTION

The system is an industrial size plant producing approximately 132,540 lb/hr of cleaned CO rich syngas with a higher heating value of about 5,835 Btu/lb (360 Btu/scf[a]) and about 3,019 lb/hr of 99.9% purity hydrogen from Illinois #6 coal. Internal systems use 500 lb/hr of the CO-rich syngas for steam generation, resulting in net syngas production of about 132,037 lb/hr. A sketch showing the major processes comprising the system is presented in Exhibit VII.2-1. The system contains the following processes:

- A gasifier process package consisting of an oxygen-fired BGL gasifier producing a medium Btu syngas; coal/limestone feed lock for introducing feedstock into the gasifier; syngas wash cooler and primary heat exchanger for cooling the syngas and removing tars, oils, and particulates from the syngas; gas liquor separation and tar/oil recycle process for removing tars and oils from syngas condensate for reinjection into the gasifier; syngas coolers for decreasing the temperature of the syngas to meet the requirements of the syngas cleanup system; and a slag quench vessel and slag lock for removing slag from the gasifier.
- A spare gasifier with coal/limestone feed lock, gas wash cooler, slag quench vessel, and slag lock vessel.
- A syngas cleanup system consisting of a Rectisol acid gas removal system (AGR) for removal and concentration of acid gases (H_2S and COS) from the syngas to levels allowing industrial users to satisfy environmental criteria, and a Claus

[a] Standard Conditions : 14.7 psia, 60°F

plant for producing elemental sulfur byproduct, from sulfur in the acid gas, for sale to industrial users. The Rectisol AGR system is also used to remove benzene, toluene, and xylene (naphtha-BTX) from the syngas stream for recycle to the gasifier.

- A Pressure Swing Adsorption System (PSA) system for removing hydrogen from the syngas.
- A waste water treatment system for removing contaminants from the liquor prior to recycling the waste water or discharging it to the environment.
- A coal receiving, storage, and delivery system for removing coal from trucks and delivering it to a coal storage area and then to the gasifier process coal feeding system.
- A limestone (flux) receiving, storage, and delivery system for removing limestone from trucks and delivering it to a limestone storage area and then to the gasifier process limestone feeding system.
- Slag handling system for collecting the slag discharged from the slag lock and transporting the slag to a storage and truck loading area.
- An air separation unit (ASU) owned and operated by a third party that provides oxygen and nitrogen to the gasification process.
- A steam system for providing deaerated water to processes and generating steam for the gasification process.
- Circulating water system that provides cooling water to the processes.
- Balance of Plant systems for supporting the gasification process, including:
    - Process water supply system;
    - Flare system for combusting syngas during start-up and system upsets;
    - Air supply system;
    - Natural gas supply system;
    - Electrical system;
    - Instrumentation and control system; and
    - Chemical and byproduct storage.

Exhibit VII.2-1 Sketch of Major Systems Comprising the Syngas and H_2 Co-Production Plant

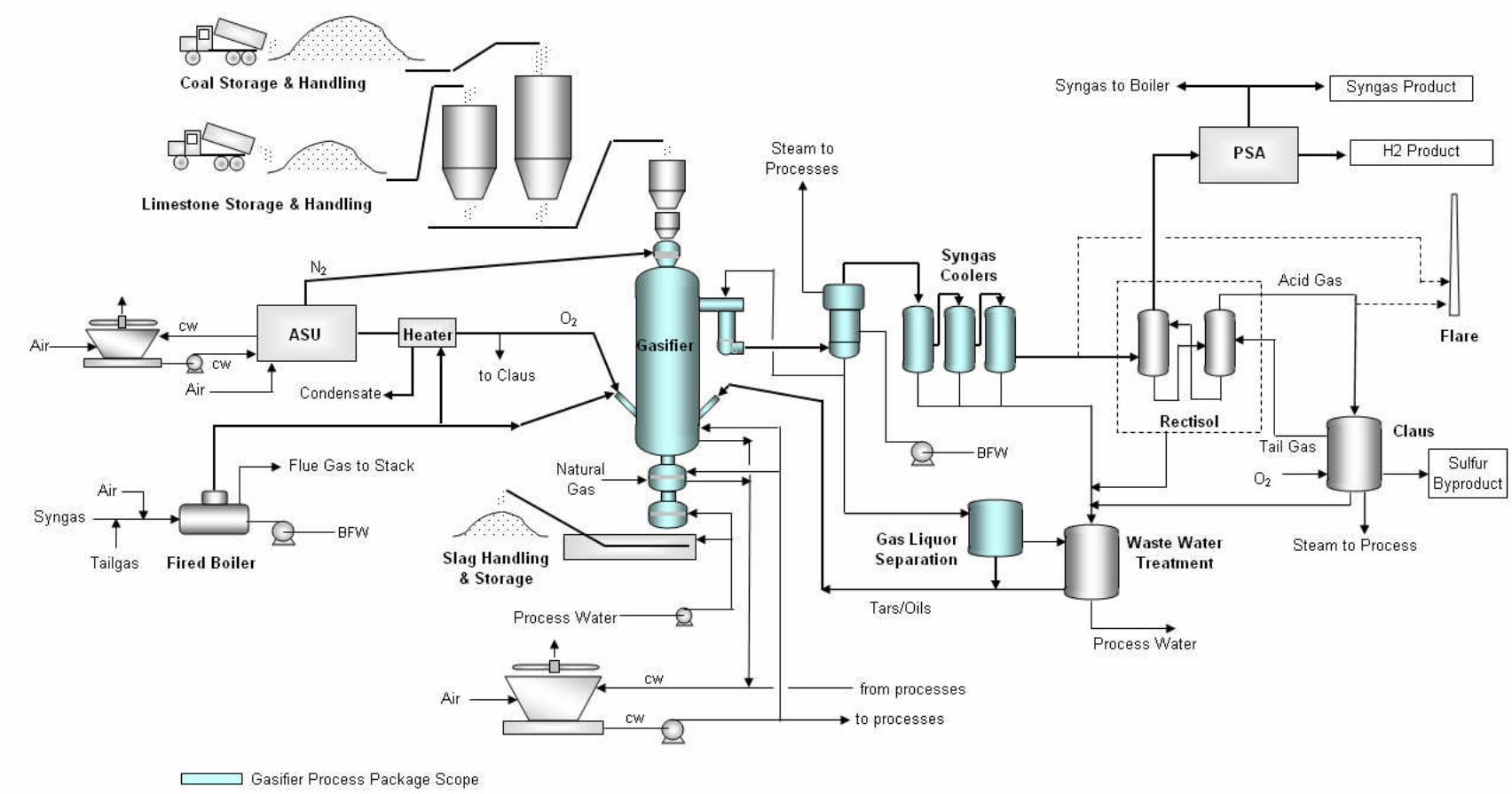

VII.2.2 HEAT & MATERIAL BALANCE, PERFORMANCE ESTIMATES, AND EMISSIONS ESTIMATES

A summary of the estimated performance resulting from heat and mass balance calculations are presented in Exhibit VII.2-2. Conceptual process flow diagrams of the major systems comprising the Syngas and H_2 Co-production Reference Plant are shown in Exhibit VII.2-3 through Exhibit VII.2-8. Estimated state point compositions and conditions for flow streams identified with numbers in the process flow diagrams are provided in Exhibit VII.2-9 through Exhibit VII.2-14.

The plant consumes about 95,409 lb/hr (1,118 Btu/hr) of Illinois #6 coal to produce about 3,019 lb/hr of 99.9% purity hydrogen and 132,537 lb/hr of clean, CO rich syngas with a higher heating value of about 5,830 Btu/lb (360 Btu/scf).. About 500 lb/hr of the syngas is co-fired, along with other tailgas from the processes, in a boiler to produce steam for the gasifier and oxygen heater, leaving about 132,037 lb/hr of syngas for export to an industrial customer(s). As an alternative, if a site-specific case warrants it, all of the syngas produced could be fired in a boiler to generate steam for export. For example, the 132,037 lb/hr of syngas could produce about 615,800 lb/hr of additional steam at 510psia/680°F for export.

The auxiliary power requirements of the syngas/H_2 production plant are estimated to be about 5,145 kWe, excluding the ASU power requirements. The ASU electrical requirements are expected to be about 9,700 kWe. The total syngas production plant thermal efficiency, defined in accordance with the DOE Quality Guidelines for Energy System Studies, is thus about 74.7%. The DOE guidelines define the thermal efficiency of fuel-only systems as the heating value energy of all the product fuels divided by the total heating value energy of all direct and indirect input fuels. The direct fuels in this case are the coal to the gasifier and natural gas to the gasifier slag tap burner. The indirect input fuels are the fuels converted outside the process to produce the electrical power required by the syngas production and ASU plants. In accordance with the DOE guidelines, a fuel energy-to-electrical energy conversion HHV efficiency of 32.8% was used.

About 3,000 lb/hr of elemental sulfur is also produced as a co-product. About 13,787 lb/hr of slag is produced by the gasification process that may be sold as a product, depending on site specific

factors. However, the Reference Plant evaluation assumes that the slag is sent to offsite non-hazardous waste disposal.

The annual capacity factor of the Reference Syngas/H_2 Production Plant, defined as the plant annual syngas production divided by the rated output times 8,760 hours[b], is expected to be about 95% with the inclusion of the spare gasifier. Information published by The Dakota Gasification Company indicates that the Great Plains Synfuels Plant has successfully operated 14 Lurgi gasifiers without a spare while maintaining an annual plant loading as high as 92%.[c] That is, the plant annually produces up to 92% of its rated output capacity. Personnel with experience at the Great Plains Synfuels Plant indicate that corrosion issues in the boiler system, which uses H_2S-rich waste gas from the Rectisol Process as fuel, has historically cost the plant over 2% in availability. The Reference Plant conceptual design for this study sends the H_2S rich gas to a Claus Unit for recovery of sulfur, and uses clean gas from the Rectisol Process as the fuel in the fired boiler. It has also been indicated that because the Great Plains Synfuels Plant has been operating at greater than design capacity, the resulting hydraulic overload of the gas liquor separation system and Phenosolvan system, and its impact on the plant cooling water system, has adversely affected annual plant capacity factor. The incorporation of a dedicated spare gasifier in the Reference Plant is expected to further increase the plant capacity factor over that achieved in the Great Plains Synfuels Plant.

---

[b] Defined in accordance with DOE Quality Guidelines for Energy System Studies

[c] CO_2 Recovery and Sequestration at Dakota Gasification Company. Daren Eliason. 2004 Gasification Technologies Conference. October 4, 2004.

Exhibit VII.2-2 Syngas/Hydrogen Co-Production Plant Estimated Performance Summary

Production Figures (average)	
Total Syngas Product, lb/hr (scfh x 10^6)	132,540 (2.26)
Syngas Higher Heating Value, Btu/lb (Btu/scf) [a]	5,830 (360)
Syngas Lower Heating Value, Btu/lb (Btu/scf)	5,595 (345)
Exported Syngas Product, lb/hr (scfh x 10^6) [b]	132,037 (2.25)
Energy Content of Exported Syngas (MMBtu/hr-HHV)	769
Hydrogen (99.9%) Product, lb/hr (scfh x 10^6)	3,019 (0.57)
Energy Content of Hydrogen Product (MMBtu/hr-HHV)	183.6
Elemental Sulfur Product, lb/hr	3,000
Slag, lb/hr	13,787
Consumption Figures (average)	
Coal Thermal Input , MMBtu/hr (HHV) [c]	1,118
Coal Feed, lb/hr	95,409
Flux (Limestone) Feed, lb/hr	2,442
Oxygen to Gasifier and Claus Furnace, lb/hr	48,173
Nitrogen for Feed Lock Purge, lb/hr	4,409
Steam to Gasifier[d], lb/hr	29,158
Cooling Makeup Water (Syngas Plant), lb/hr	55,440
Process Makeup Water[e], lb/hr	61,820
Methanol, lb/hr	30
Natural Gas to Slag Tap (Ring) burner, lb/hr	140
Aux. Electric Power (Syngas Plant), kWe	5,145
ASU Electric Power, kWe	9,700
ASU Cooling Makeup Water, lb/hr	27,100
Plant Equivalent Efficiency	
Fuel and Power Energy Input[f], MMBtu/hr	1275
Energy in Syngas and H_2 Products, MMBtu/hr	953
Plant Net Thermal Efficiency[g], %	74.7
Emissions	
Syngas Fired Boiler	
SO_2 , lb/MMBtu	< 0.003
NO_x, lb/MMBtu[h]	< 0.1
Hg, lb/trillion Btu[i]	< 0.001
CO_2, lb/MMBtu	< 225

Note a: Standard Conditions: 14.7 psia, 60°F
Note b: Total syngas from cleanup system minus syngas used in the gasification system processes
Note c: Based on Illinois #6 coal with HHV of 11,714 Btu/lb
Note d: Generated in a fired boiler using tailgas from the processes and portion of syngas produced
Note e: A detailed optimization of water recycling in the plant was not performed. An optimization study may reduce the process water makeup requirement
Note f: Coal energy plus natural gas energy (to ring burner) plus purchased aux. power and ASU power expressed as thermal energy to utility power generation plant with HHV efficiency of 32.8%.
Note g: Defined in accordance with DOE Quality Guidelines for Energy System Studies as energy in exported syngas product divided by plant energy input as defined in Note e.
Note h: Without post-combustion controls (e.g. SCR)
Note i: Based on Hg content in coal of < 0.12 ppm and 90% or higher removal efficiency.

Exhibit VII.2-3 Gasification and Gas Cooling Conceptual Process Flow Diagram

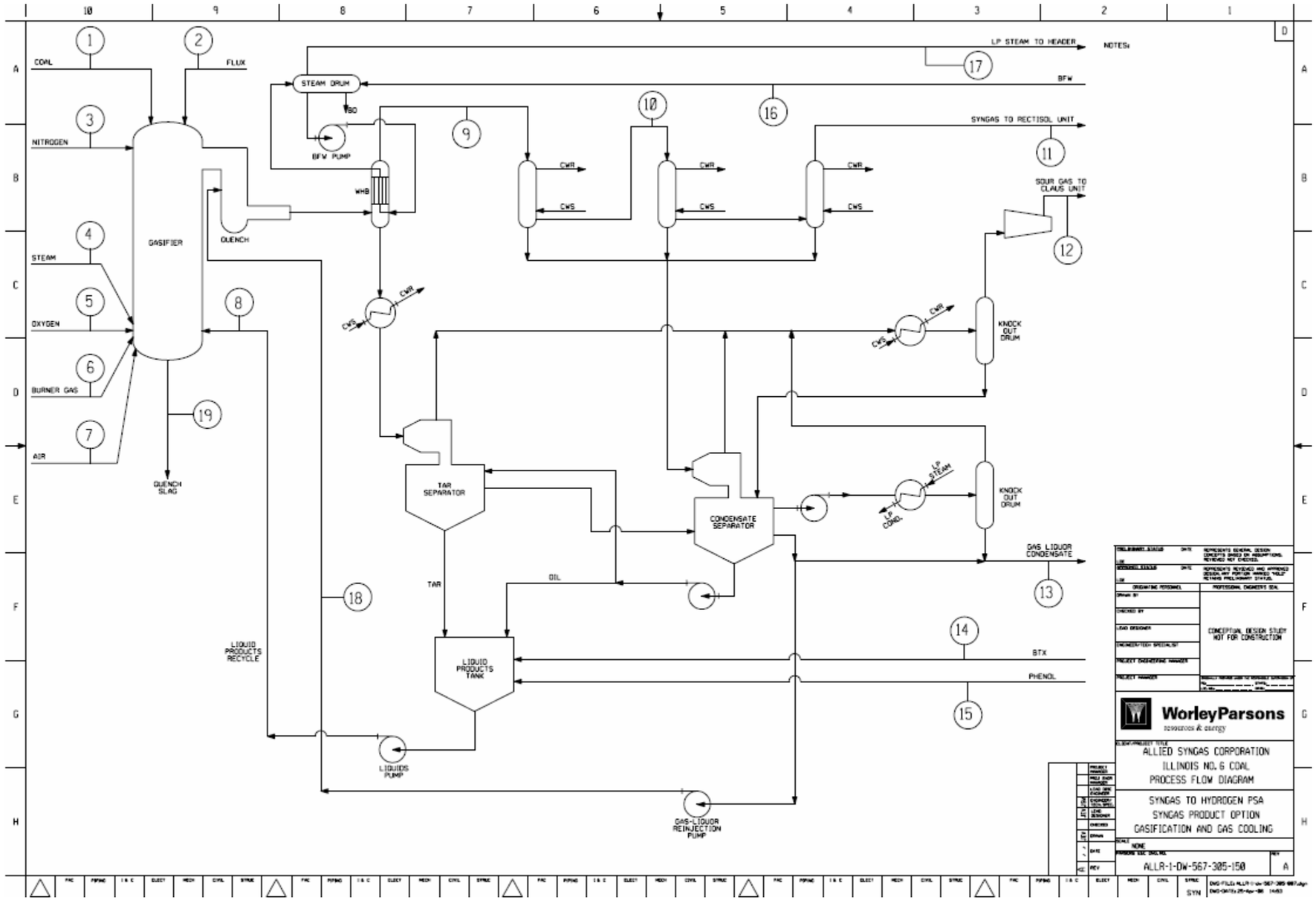

This page intentionally left blank

Exhibit VII.2-4 Rectisol System Conceptual Process Flow Diagram

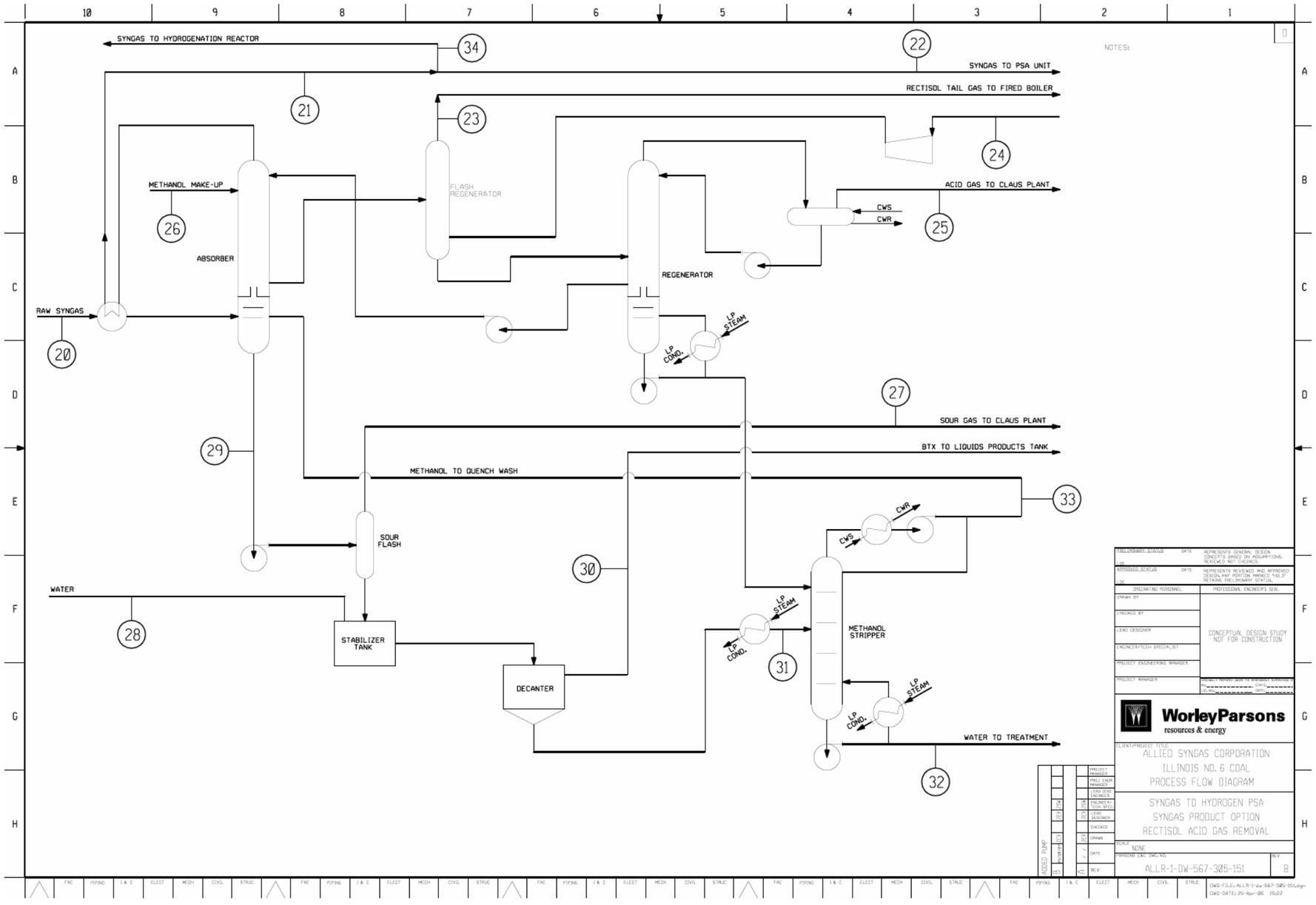

This page intentionally left blank

Exhibit VII.2-5 Sulfur Production (Claus) System Conceptual Process Flow Diagram

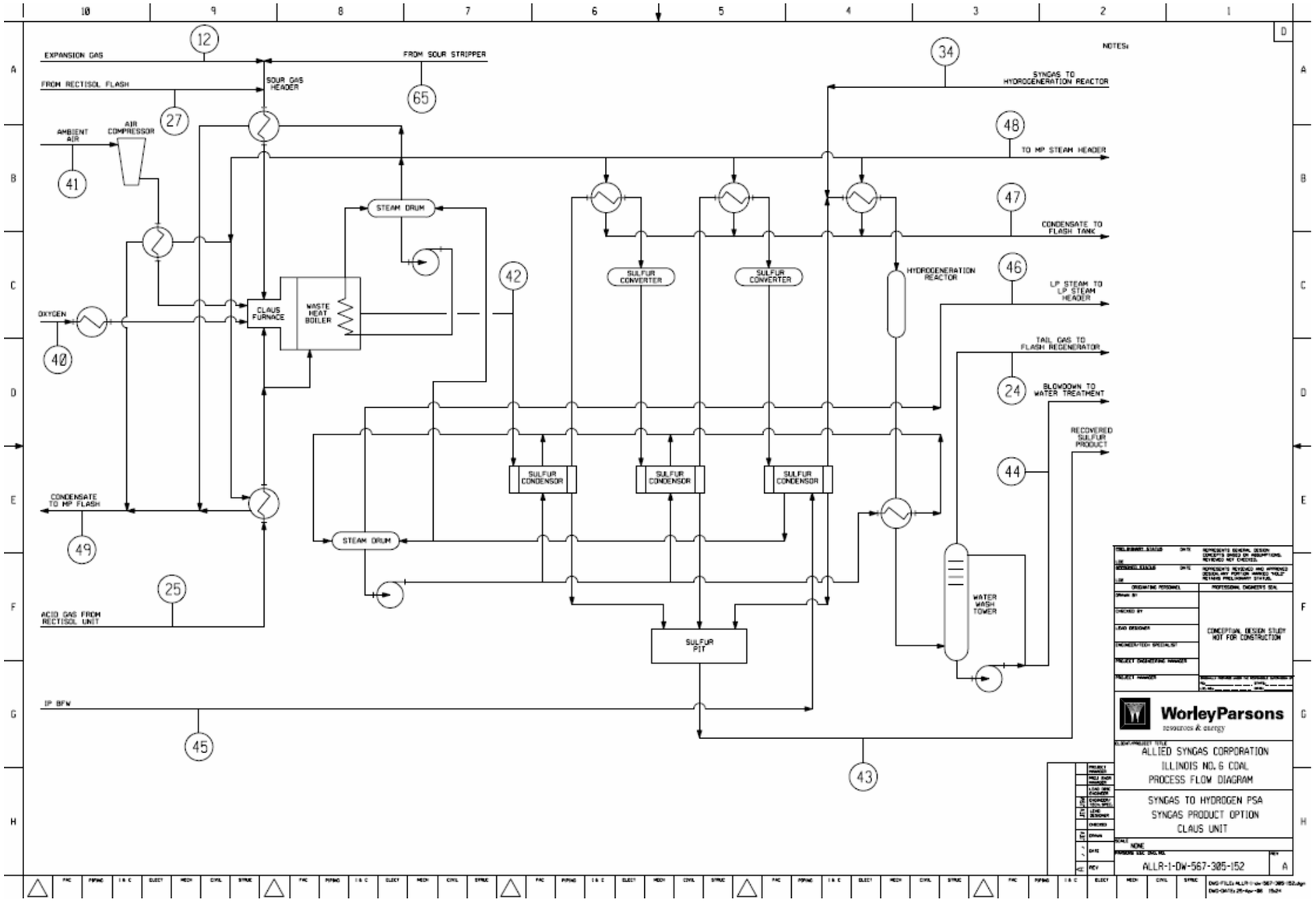

This page intentionally left blank

Exhibit VII.2-6 Waste Water Treatment System Conceptual Process Flow Diagram

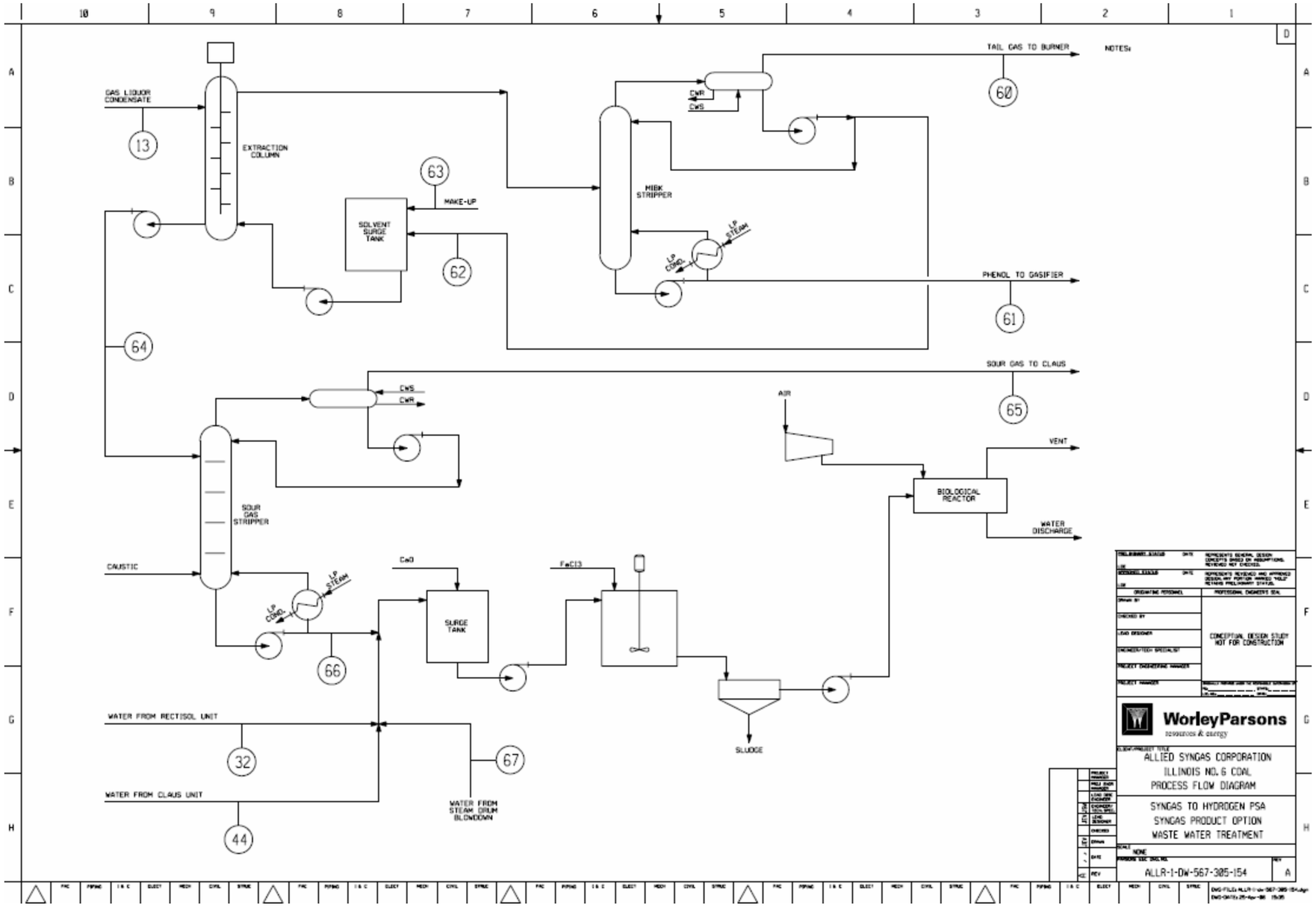

This page intentionally left blank

Exhibit VII.2-7 Steam System Conceptual Process Flow Diagram

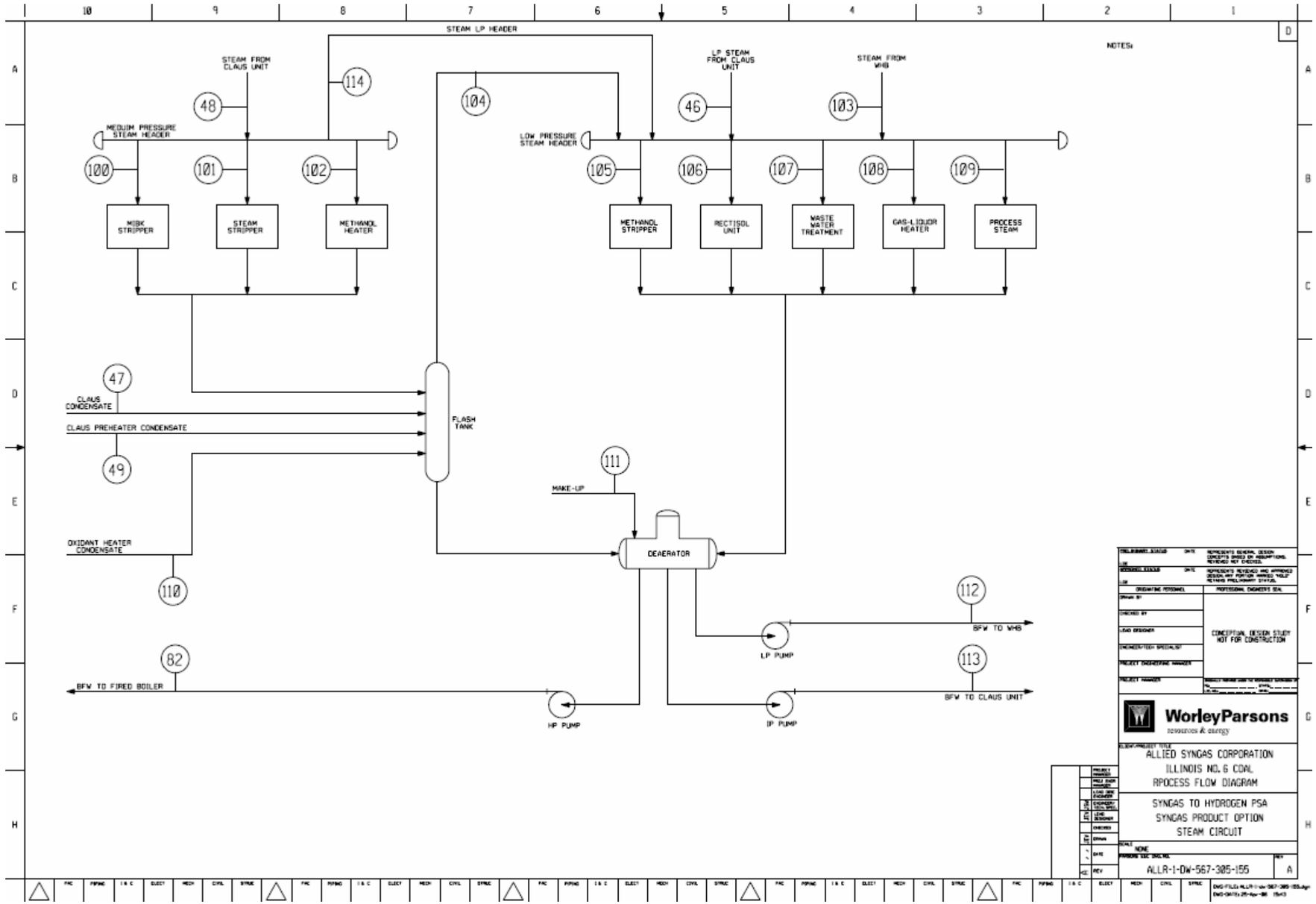

This page intentionally left blank

Exhibit VII.2-8 Syngas-fired Boiler Conceptual Process Flow Diagram

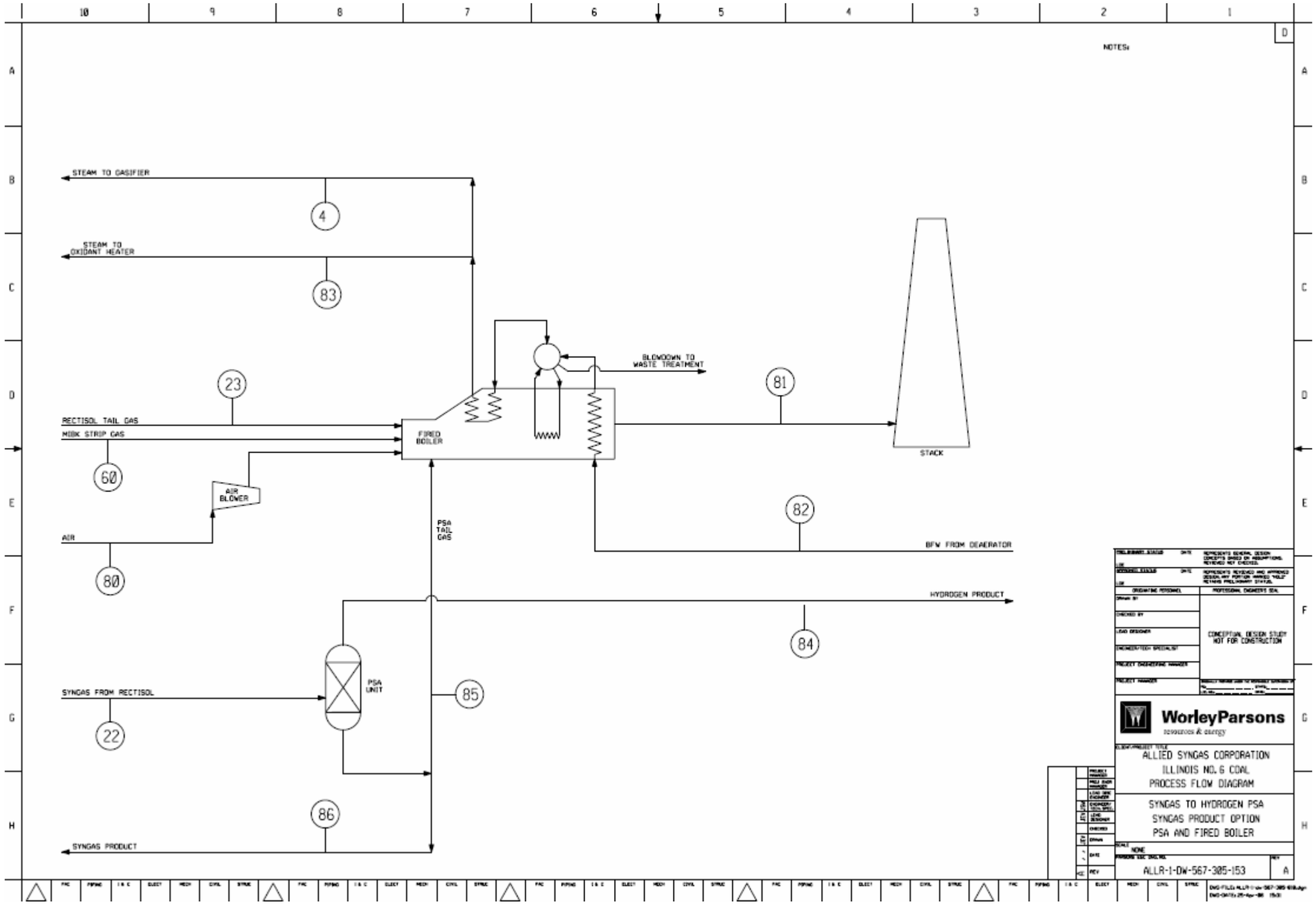

This page intentionally left blank

Exhibit VII.2-9 Gasification and Gas Cooling Systems Estimated State Point Compositions and Conditions

Syngas to Hydrogen Option - Gasifier, Gas Cooling, and Gas Liquor Condensate Separation Material Balance (pg. 1 of 2)

STREAM	1		2		3		4		5		6		7		8		9		10	
Description	Coal to Gasifier		Flux to Gasifier		Purge Nitrogen		Steam to Gasifier		Oxygen to Gasifier		Burner Gas		Burner Air		Liquid Products Recycle		Raw Gas from WHB		Raw Gas	
Flow	lbmol/hr	lb/hr	lbmol/hr	lb/hr	lbmol/hr	lb/hr	lbmol/hr	lb/hr	lbmol/hr	lb/hr	lbmol/hr	lb/hr	lbmol/hr	lb/hr	lbmol/hr	lb/hr	lbmol/hr	lb/hr	lbmol/hr	lb/hr
AR	0	0	0	0	0	0	0	0	0	0	0	0	1.09	43.40	0	0	1.09	43.39	1.09	43.39
BTX	0	0	0	0	0	0	0	0	0	0	0	0	0	0	7.81	719.6	8.01	737.9	8.01	737.9
CH4	0	0	0	0	0	0	0	0	0	0	8.45	135.6	0	0	0	0	458.41	7,354	458.40	7,354
C2H4	0	0	0	0	0	0	0	0	0	0	0.02	0.60	0	0	0	0	3.65	102.4	3.65	102.42
C2H6	0	0	0	0	0	0	0	0	0	0	0	0	0	0	0	0	18.16	546.0	18.16	546.0
C3H6	0	0	0	0	0	0	0	0	0	0	0.02	0.90	0	0	0	0	1.47	61.92	1.47	61.91
C3H8	0	0	0	0	0	0	0	0	0	0	0	0	0	0	0.05	2.07	7.68	338.5	7.68	338.5
C4H8	0	0	0	0	0	0	0	0	0	0	0	0	0	0	0.05	2.81	1.14	63.96	1.14	63.96
C4H10	0	0	0	0	0	0	0	0	0	0	0	0	0	0	0.21	12.10	3.14	182.4	3.14	182.4
CH3OH	0	0	0	0	0	0	0	0	0	0	0	0	0	0	0	0	0.00	0.00	0.00	0.00
CO	0	0	0	0	0	0	0	0	0	0	0	0	0	0	0	0	4,208	117,875	4,208	117,875
CO2	0	0	0	0	0	0	0	0	0	0	0.02	0.76	0	0	0.99	43.57	332.33	14,626	332.27	14,623
COS	0	0	0	0	0	0	0	0	0	0	0	0	0	0	0.06	3.42	4.80	288.4	4.80	288.2
HCN	0	0	0	0	0	0	0	0	0	0	0	0	0	0	0	0	2.23	60.22	2.23	60.17
HCL	0	0	0	0	0	0	0	0	0	0	0	0	0	0	0	0	2.50	91.16	2.50	90.99
H2	0	0	0	0	0	0	0	0	0	0	0	0	0	0	0	0	2,306	4,648	2,306	4,648
H2O	0	0	0	0	0	0	1,618.51	29,158	0	0	0	0	0	0	0.03	0.56	2,468	44,461	331.17	5,966
H2S	0	0	0	0	0	0	0	0	0	0	0	0	0	0	0.46	15.51	89.34	3,045	89.07	3,035
MIBK	0	0	0	0	0	0	0	0	0	0	0	0	0	0	0	0	0.00	0.00	0.00	0.00
N2	0	0	0	0	157.39	4,409	0	0	7.51	210.5	0.08	2.17	84.73	2,374	0	0	287.43	8,052	287.43	8,052
NH3	0	0	0	0	0	0	0	0	0	0	0	0	0	0	0	0	0	0	0	0
O2	0	0	0	0	0	0	0	0	1,495.14	47,841	0	0	22.81	730.0	0	0	0	0	0	0
PHENOL	0	0	0	0	0	0	0	0	0	0	0	0	0	0	1.7	160.0	0	0	0	0
SO2	0	0	0	0	0	0	0	0	0	0	0	0	0	0	0	0	0	0	0	0
Mass Flow, lb/hr																				
Coal	95,409		0		0		0		0		0		0		0		0		0	
Flux	0		2442		0		0		0		0		0		0		0		0	
Oil	0		0		0		0		0		0		0		2099		0		0	
Slag	0		0		0		0		0		0		0		0		0		0	
Sulfur	0		0		0		0		0		0		0		0		0		0	
Tar	0		0		0		0		0		0		0		4902		0		0	
Total Flow lbmol/hr	n/a		n/a		157		1,619		1,503		9		109		n/a		10,203		8,066	
Total Flow lb/hr	95,409		2,442		4,409		29,158		48,053		140		3,147		7,960		202,580		164,070	
Total Flow cuft/hr	n/a		n/a		1,755		38,813		26,564		96		1,212		n/a		245,316		171,122	
Temperature F	60		60		60		680		392		60		60		100		311		208	
Pressure psi	n/a		n/a		500		510		517		500		500		500		340		338	
Vapor Frac	n/a		n/a		1		1		1		1		1		0		1		1	
Liquid Frac	n/a		n/a		0		0		0		0		0		1		0		0	
Enthalpy Btu/lb	n/a		n/a		-118		-5,491		71		-1,959		-4		n/a		-2,530		-1,828	
Density lb/cuft	n/a		n/a		2.5116		0.7512		1.8089		1.4616		2.5973		n/a		0.8258		0.9588	
Average MW	n/a		n/a		28.0135		18.0153		31.9789		16.3016		28.9697		n/a		19.8542		20.3407	

4/26/2006 13:36

This page intentionally left blank

.

Exhibit VII.2-9 (cont'd) Gasification and Gas Cooling Systems Estimated State Point Compositions and Conditions

Syngas to Hydrogen Option - Gasifier, Gas Cooling, and Gas Liquor Condensate Separation Material Balance (pg. 2 of 2)

STREAM	11		12		13		14		15		16		17		18		19	
Description	Syngas to Rectisol Unit		Sour Gas to Claus Unit		Gas Liquor Condensate		BTX to Gasifier		Phenol to Gasifier		BFW to Steam Drum		LP Steam to Header		Quench Water		Slag	
Flow	lbmol/hr	lb/hr	lbmol/hr	lb/hr	lbmol/hr	lb/hr	lbmol/hr	lb/hr	lbmol/hr	lb/hr	lbmol/hr	lb/hr	lbmol/hr	lb/hr	lbmol/hr	lb/hr	lbmol/hr	lb/hr
AR	1.09	43.39	0.00	0.01	0	0	0	0	0	0	0	0	0	0	0	0	0	0
BTX	8.01	737.9	0	0	0.00	0.19	7.81	719.6	0	0	0	0	0	0	0	0	0	0
CH4	458.39	7354	0.03	0.44	0.03	0.47	0	0	0	0	0	0	0	0	0	0	0	0
C2H4	3.65	102.4	0.00	0.02	0	0	0	0	0	0	0	0	0	0	0	0	0	0
C2H6	18.16	546.0	0.00	0.09	0	0	0	0	0	0	0	0	0	0	0	0	0	0
C3H6	1.47	61.91	0.00	0.01	0	0	0	0	0	0	0	0	0	0	0	0	0	0
C3H8	7.68	338.5	0.00	0.02	0	0	0	2	0	0	0	0	0	0	0	0	0	0
C4H8	1.14	63.96	0.00	0.00	0	0	0	3	0	0	0	0	0	0	0	0	0	0
C4H10	3.14	182.4	0.00	0.00	0	0	0	12	0	0	0	0	0	0	0	0	0	0
CH3OH	0	0	0	0	0	0	0	0	0	0	0	0	0	0	0	0	0	0
CO	4,208.31	117,875	0.08	2.20	0.01	0.24	0	0	0	0	0	0	0	0	0	0	0	0
CO2	332.26	14,622	1.56	68.82	3.65	160.6	0.99	43.51	0	0	0	0	0	0	0	0	0	0
COS	4.80	288.2	0.00	0.14	0.00	0.28	0	3	0	0	0	0	0	0	0	0	0	0
HCN	2.23	60.16	0.00	0.02	0.00	0.08	0	0	0	0	0	0	0	0	0	0	0	0
HCL	0	0	0	0	2.50	91.28	0	0	0	0	0	0	0	0	0	0	0	0
H2	2,305.64	4,648	0.04	0.09	0.02	0.04	0	0	0	0	0	0	0	0	0	0	0	0
H2O	18.52	333.7	0.41	7.45	606.00	10,917	0	1	0	0	1,016.08	18,305	995.76	17,939	3,530.19	63,596	0	0
H2S	89.03	3,034	0.06	2.15	0.45	15.33	0	16	0	0	0	0	0	0	0	0	0	0
MIBK	0	0	0	0	0	0	0	0	0	0	0	0	0	0	0	0	0	0
N2	287.43	8,052	0.01	0.21	0	0	0	0	0	0	0	0	0	0	0	0	0	0
NH3	0	0	0	0	9.14	155.6	0	0	0	0	0	0	0	0	0	0	0	0
O2	0	0	0	0	0	0	0	0	0	0	0	0	0	0	0	0	0	0
PHENOL	0	0	0	0	1.71	160.9	0	0	1.70	159.9	0	0	0	0	0	0	0	0
SO2	0	0	0	0	0	0	0	0	0	0	0	0	0	0	0	0	0	0
Mass Flow, lb/hr																		
Coal	0		0		0		0		0		0		0		0		0	
Flux	0		0		0		0		0		0		0		0		0	
Oil	0		0		0		0		0		0		0		0		0	
Slag	0		0		0		0		0		0		0		0		13787	
Sulfur	0		0		0		0		0		0		0		0		0	
Tar	0		0		0		0		0		0		0		0		0	
Total Flow lbmol/hr	7,751		2		624		10		2		1,016		996		3,530		n/a	
Total Flow lb/hr	158,346		82		11,502		801		160		18,305		17,939		63,597		13,787	
Total Flow cuft/hr	138,213		45		202		15		3		310		104,331		1,101		n/a	
Temperature F	95		95		65		40		316		240		308		100		n/a	
Pressure psi	333		35		25		20		15		150		75		500		n/a	
Vapor Frac	1		1		0		0		0		0		1		0		n/a	
Liquid Frac	0		0		1		1		1		1		0		1		n/a	
Enthalpy Btu/lb	-1,731		-3,840		-6,432		-214		-584		-6,657		-5,685		-6,754		n/a	
Density lb/cuft	1.1457		1.8231		57.0509		54.8956		59.7737		59.1007		18.0153		57.7405		n/a	
Average MW	20.4293		37.0266		18.4475		82.7183		94.1130		18.0153		282.6288		18.0153		n/a	

4/26/2006 13:36

This page intentionally left blank

Exhibit VII.2-10 Rectisol System Estimated State Point Compositions and Conditions

Syngas to Hydrogen Option - Rectisol Acid Gas Removal Material Balance (pg. 1 of 2)

STREAM	20		21		22		23		24		25		26		27	
Description	Raw Syngas to Rectisol Absorber		Syngas Out Rectisol Absorber		Syngas to PSA Unit		Flash Gas to Fired Boiler		Tail Gas From Claus Plant		Acid Gas to Claus Plant		Methanol Make-Up		Sour Gas to Claus Plant	
Flow	lbmol/hr	lb/hr	lbmol/hr	lb/hr	lbmol/hr	lb/hr	lbmol/hr	lb/hr	lbmol/hr	lb/hr	lbmol/hr	lb/hr	lbmol/hr	lb/hr	lbmol/hr	lb/hr
AR	1.09	43.39	1.06	42.2	1.06	42.1	2.22	88.75	2.21	88.43	0.02	0.90	0.00	0.00	0.00	0.01
BTX	8.01	737.9	0.12	10.94	0.12	10.94	0.04	3.65	0.00	0.00	0.00	0.00	0.00	0.00	0.04	4.11
CH4	458.39	7,354	421.48	6,762	421.32	6,759	36.36	583.25	0.07	1.17	0.37	5.89	0.00	0.00	0.27	4.30
C2H4	3.65	102.4	1.96	55.06	1.96	55.0	1.67	46.91	0.00	0.00	0.00	0.00	0.00	0.00	0.02	0.44
C2H6	18.16	546.0	9.91	297.9	9.90	297.8	8.11	243.78	0.00	0.02	0.00	0.00	0.00	0.00	0.14	4.12
C3H6	1.47	61.91	0.20	8.36	0.20	8.36	1.22	51.36	0.00	0.00	0.00	0.00	0.00	0.00	0.04	1.87
C3H8	7.68	338.5	3.82	168.27	3.81	168.2	3.52	155.33	0.00	0.01	0.00	0.00	0.00	0.00	0.30	13.12
C4H8	1.14	63.96	0.01	0.5	0.01	0.53	0.94	52.92	0.00	0.00	0.00	0.00	0.00	0.00	0.13	7.20
C4H10	3.14	182.4	0.19	11.09	0.19	11.1	2.32	134.87	0.00	0.00	0.00	0.00	0.00	0.00	0.45	26.37
CH3OH	0.00	0.00	0.00	0.00	0.00	0.00	0.00	0.00	0.00	0.00	1.41	45.28	1.76	56.49	0.01	0.32
CO	4,208.31	117,875	4,114.92	115,259	4,113.41	115,216	111.61	3,126.32	20.18	565.2	1.13	31.6	0.00	0.00	0.82	23.00
CO2	332.26	14,622	9.47	416.6	9.46	416	320.82	14,118.9	89.98	3,960	75.25	3,312	0.00	0.00	15.71	691.3
COS	4.80	288.2	0.00	0.00	0.00	0.00	0.00	0.25	0.53	31.79	5.17	310.6	0.00	0.00	0.11	6.32
HCN	2.23	60.16	0.00	0.00	0.00	0.00	0.00	0.00	0.00	0.00	0.00	0.08	0.00	0.00	0.00	0.00
HCL	0.00	0.00	0.00	0.00	0.00	0.00	0.00	0.00	0.00	0.00	0.00	0.00	0.00	0.00	0.00	0.00
H2	2,305.64	4,648	2,298.70	4,634	2,297.86	4,632	14.66	29.56	7.79	15.70	0.04	0.09	0.00	0.00	0.02	0.04
H2O	18.52	333.72	0.00	0.00	0.00	0.00	0.00	0.00	19.00	342.3	19.03	342.8	0.00	0.00	0.01	0.21
H2S	89.03	3,034	0.03	0.90	0.03	0.90	0.05	1.56	4.07	138.7	91.77	3,128	0.00	0.00	0.73	24.89
MIBK	0.00	0.00	0.00	0.00	0.00	0.00	0.00	0.00	0.00	0.00	0.00	0.00	0.00	0.00	0.00	0.00
N2	287.43	8,052	283.35	7,938	283.25	7,935	180.76	5,063.90	177.28	4,966	0.54	15.24	0.00	0.00	0.05	1.42
NH3	0.00	0.00	0.00	0.00	0.00	0.00	0.00	0.00	0.00	0.00	0.00	0.00	0.00	0.00	0.00	0.00
O2	0.00	0.00	0.00	0.00	0.00	0.00	0.00	0.00	0.00	0.00	0.00	0.00	0.00	0.00	0.00	0.00
PHENOL	0.00	0.00	0.00	0.00	0.00	0.00	0.00	0.00	0.00	0.00	0.00	0.00	0.00	0.00	0.00	0.00
SO2	0.00	0.00	0.00	0.00	0.00	0.00	0.00	0.00	0.00	0.00	0.00	0.00	0.00	0.00	0.00	0.00
Mass Flow, lb/hr																
Coal	0		0		0		0		0		0		0		0	
Flux	0		0		0		0		0		0		0		0	
Slag	0		0		0		0		0		0		0		0	
Sulfur	0		0		0		0		0		0		0		0	
Total Flow lbmol/hr	7,751		7,145		7,143		684		321		195		2		19	
Total Flow lb/hr	158,346		135,606		135,556		23,702		10,110		7,192		56		809	
Total Flow cuft/hr	138,213		139,444		139,393		136,373		96,095		34,740		1		2,508	
Temperature F	95		80		80		100		113		90		140		-15	
Pressure psi	333		297		297		30		21		30		50		35	
Vapor Frac	1		1		1		1		1		1		0		1	
Liquid Frac	0		0		0		0		0		0		1		0	
Enthalpy Btu/lb	-1,731		-1,558		-1,558		-2,580		-1,795		-2,269		-3,195		-3,434	
Density lb/cuft	1.146		0.972		0.972		0.174		0.105		0.207		47.109		0.323	
Average MW	20.429		18.979		18.979		34.636		31.483		36.931		32.042		42.933	

4/26/2006 0:00

This page intentionally left blank

Exhibit VII.2-10 (Cont'd) Rectisol System Estimated State Point Compositions and Conditions

Syngas to Hydrogen Option - Rectisol Acid Gas Removal Material Balance (pg. 2 of 2)

STREAM	28		29		30		31		32		33		34	
Description	Water to Stabilizer Tank		Pre-Wash From Rectisol Absorber		BTX to Liquid Products Tank		Methanol to Stripper		Methanol Stripper Bottoms		Pre-Wash to Rectisol Absorber		Syngas to Hydrogenation Reactor	
Flow	lbmol/hr	lb/hr	lbmol/hr	lb/hr	lbmol/hr	lb/hr	lbmol/hr	lb/hr	lbmol/hr	lb/hr			lbmol/hr	lb/hr
AR	0.00	0.00	0.00	0.01	0.00	0.00	0.00	0.00	0.00	0.00	0.00	0.00	0.00	0.02
BTX	0.00	0.00	7.85	723.3	7.80	719.2	0.00	0.00	0.00	0.00	0.00	0.00	0.00	0.00
CH4	0.00	0.00	0.27	4.32	0.00	0.01	0.00	0.00	0.00	0.00	0.00	0.00	0.16	2.49
C2H4	0.00	0.00	0.02	0.45	0.00	0.01	0.00	0.00	0.00	0.00	0.00	0.00	0.00	0.02
C2H6	0.00	0.00	0.14	4.29	0.01	0.17	0.00	0.00	0.00	0.00	0.00	0.00	0.00	0.11
C3H6	0.00	0.00	0.05	2.19	0.01	0.33	0.00	0.00	0.00	0.00	0.00	0.00	0.00	0.00
C3H8	0.00	0.00	0.34	14.92	0.04	1.80	0.00	0.00	0.00	0.00	0.00	0.00	0.00	0.06
C4H8	0.00	0.00	0.19	10.51	0.06	3.31	0.00	0.00	0.00	0.00	0.00	0.00	0.00	0.00
C4H10	0.00	0.00	0.63	36.44	0.17	10.07	0.00	0.00	0.00	0.00	0.00	0.00	0.00	0.00
CH3OH	0.00	0.00	16.59	531.5	0.02	0.53	16.56	530.6	0.39	12.44	17.94	574.69	0.00	0.0
CO	0.00	0.00	0.82	23.01	0.00	0.01	0.00	0.00	0.00	0.00	0.00	0.00	1.52	42.50
CO2	0.00	0.00	16.71	735.2	1.00	43.87	0.00	0.00	0.00	0.00	0.00	0.00	0.00	0.15
COS	0.00	0.00	0.15	9.22	0.05	2.90	0.00	0.00	0.00	0.00	0.00	0.00	0.00	0.00
HCN	0.00	0.00	0.00	0.04	0.00	0.04	0.00	0.00	0.00	0.00	0.00	0.00	0.00	0.00
HCL	0.00	0.00	0.00	0.00	0.00	0.00	0.00	0.00	0.00	0.00	0.00	0.00	0.00	0.00
H2	0.00	0.00	0.02	0.04	0.00	0.00	0.00	0.00	0.00	0.00	0.00	0.00	0.85	1.71
H2O	15.00	270.2	18.50	333.2	0.03	0.60	33.45	602.6	33.31	600.1	0.14	2.5	0.00	0.00
H2S	0.00	0.00	1.25	42.71	0.52	17.82	0.00	0.00	0.00	0.00	0.00	0.00	0.00	0.00
MIBK	0.00	0.00	0.00	0.00	0.00	0.00	0.00	0.00	0.00	0.00	0.00	0.00	0.00	0.00
N2	0.00	0.00	0.05	1.42	0.00	0.00	0.00	0.00	0.00	0.00	0.00	0.00	0.10	2.93
NH3	0.00	0.00	0.00	0.00	0.00	0.00	0.00	0.00	0.00	0.00	0.00	0.00	0.00	0.00
O2	0.00	0.00	0.00	0.00	0.00	0.00	0.00	0.00	0.00	0.00	0.00	0.00	0.00	0.00
PHENOL	0.00	0.00	0.00	0.00	0.00	0.00	0.00	0.00	0.00	0.00	0.00	0.00	0.00	0.00
SO2	0.00	0.00	0.00	0.00	0.00	0.00	0.00	0.00	0.00	0.00	0.00	0.00	0.00	0.00
Mass Flow, lb/hr														
Coal	0		0		0		0		0		0		0	
Flux	0		0		0		0		0		0		0	
Slag	0		0		0		0		0		0		0	
Sulfur	0		0		0		0		0		0		0	
Total Flow lbmol/hr	15		64		10		50		34		18		3	
Total Flow lb/hr	270		2,473		801		1,133		613		577		50	
Total Flow cuft/hr	4		41		15		21		11		13		51	
Temperature F	100		-4		40		135		282		205		80	
Pressure psi	20		330		20		55		52		48		297	
Vapor Frac	0		0		0		0		0		0		1	
Liquid Frac	1		1		1		1		1		1		0	
Enthalpy Btu/lb	-6,842		-2,954		-214		-5,122		-6,586		-3,150		-1,558	
Density lb/cuft	61.249		60.366		54.930		52.963		54.283		44.126		0.972	
Average MW	18.015		38.898		82.430		22.660		18.177		31.935		18.979	

4/26/2006 0:00

This page intentionally left blank

Exhibit VII.2-11 Sulfur Production (Claus) System Estimated State Point Compositions and Conditions

Syngas to Hydrogen Option - Claus Unit Material Balance

STREAM	40		41		42		43		44		45		46		47		48		49	
Description	Oxygen to Claus Furnace		Air to Claus Furnace		Claus Gas Out WHB		Sulfur Product		Blowdown to Water Treatment		IP BFW from Deaerator		LP Steam to LP Steam Header		Condensate to Flash Tank		MP Steam to MP Steam Header		Condensate to Flash Tank	
Flow	lbmol/hr	lb/hr	lbmol/hr	lb/hr	lbmol/hr	lb/hr	lbmol/hr	lb/hr	lbmol/hr	lb/hr	lbmol/hr	lb/hr	lbmol/hr	lb/hr	lbmol/hr	lb/hr	lbmol/hr	lb/hr	lbmol/hr	lb/hr
AR	0.00	0.00	2.19	87.51	2.21	88.43	0.00	0.00	0.00	0.00	0.00	0.00	0.00	0.00	0.00	0.00	0.00	0.00	0.00	0.00
BTX	0.00	0.00	0.00	0.00	0.00	0.00	0.00	0.00	0.00	0.00	0.00	0.00	0.00	0.00	0.00	0.00	0.00	0.00	0.00	0.00
CH4	0.00	0.00	0.00	0.00	0.22	3.53	0.00	0.00	0.00	0.00	0.00	0.00	0.00	0.00	0.00	0.00	0.00	0.00	0.00	0.00
C2H4	0.00	0.00	0.00	0.00	0.00	0.00	0.00	0.00	0.00	0.00	0.00	0.00	0.00	0.00	0.00	0.00	0.00	0.00	0.00	0.00
C2H6	0.00	0.00	0.00	0.00	0.00	0.00	0.00	0.00	0.00	0.00	0.00	0.00	0.00	0.00	0.00	0.00	0.00	0.00	0.00	0.00
C3H6	0.00	0.00	0.00	0.00	0.00	0.00	0.00	0.00	0.00	0.00	0.00	0.00	0.00	0.00	0.00	0.00	0.00	0.00	0.00	0.00
C3H8	0.00	0.00	0.00	0.00	0.00	0.00	0.00	0.00	0.00	0.00	0.00	0.00	0.00	0.00	0.00	0.00	0.00	0.00	0.00	0.00
C4H8	0.00	0.00	0.00	0.00	0.00	0.00	0.00	0.00	0.00	0.00	0.00	0.00	0.00	0.00	0.00	0.00	0.00	0.00	0.00	0.00
C4H10	0.00	0.00	0.00	0.00	0.00	0.00	0.00	0.00	0.00	0.00	0.00	0.00	0.00	0.00	0.00	0.00	0.00	0.00	0.00	0.00
CH3OH	0.00	0.00	0.00	0.00	0.00	0.00	0.00	0.00	0.00	0.00	0.00	0.00	0.00	0.00	0.00	0.00	0.00	0.00	0.00	0.00
CO	0.00	0.00	0.00	0.00	18.35	513.88	0.00	0.00	0.00	0.00	0.00	0.00	0.00	0.00	0.00	0.00	0.00	0.00	0.00	0.00
CO2	0.00	0.00	0.00	0.00	86.91	3824.66	0.00	0.00	0.00	0.04	0.00	0.00	0.00	0.00	0.00	0.00	0.00	0.00	0.00	0.00
COS	0.00	0.00	0.00	0.00	3.69	221.57	0.00	0.00	0.00	0.00	0.00	0.00	0.00	0.00	0.00	0.00	0.00	0.00	0.00	0.00
HCN	0.00	0.00	0.00	0.00	0.00	0.05	0.00	0.05	0.00	0.00	0.00	0.00	0.00	0.00	0.00	0.00	0.00	0.00	0.00	0.00
HCL	0.00	0.00	0.00	0.00	0.00	0.00	0.00	0.00	0.00	0.00	0.00	0.00	0.00	0.00	0.00	0.00	0.00	0.00	0.00	0.00
H2	0.00	0.00	0.00	0.00	10.93	22.03	0.00	0.00	0.00	0.00	0.00	0.00	0.00	0.00	0.00	0.00	0.00	0.00	0.00	0.00
H2O	0.00	0.00	0.00	0.00	121.67	2191.91	0.00	0.00	124.43	2241.67	732.90	13203.25	259.61	4676.90	163.87	2952.08	84.78	1527.32	224.36	4041.80
H2S	0.00	0.00	0.00	0.00	20.94	713.70	0.00	0.00	0.00	0.03	0.00	0.00	0.00	0.00	0.00	0.00	0.00	0.00	0.00	0.00
MIBK	0.00	0.00	0.00	0.00	0.00	0.00	0.00	0.00	0.00	0.00	0.00	0.00	0.00	0.00	0.00	0.00	0.00	0.00	0.00	0.00
N2	0.04	1.05	170.87	4786.84	177.18	4963.56	0.00	0.00	0.00	0.00	0.00	0.00	0.00	0.00	0.00	0.00	0.00	0.00	0.00	0.00
NH3	0.00	0.00	0.00	0.00	0.00	0.00	0.00	0.00	0.00	0.00	0.00	0.00	0.00	0.00	0.00	0.00	0.00	0.00	0.00	0.00
O2	3.72	118.95	46.00	1472.04	0.00	0.00	0.00	0.00	0.00	0.00	0.00	0.00	0.00	0.00	0.00	0.00	0.00	0.00	0.00	0.00
PHENOL	0.00	0.00	0.00	0.00	0.00	0.00	0.00	0.00	0.00	0.00	0.00	0.00	0.00	0.00	0.00	0.00	0.00	0.00	0.00	0.00
SO2	0.00	0.00	0.00	0.00	12.42	795.90	0.00	0.00	0.00	0.00	0.00	0.00	0.00	0.00	0.00	0.00	0.00	0.00	0.00	0.00
S2	0.00	0.00	0.00	0.00	0.11	6.80	0.00	0.00	0.00	0.00	0.00	0.00	0.00	0.00	0.00	0.00	0.00	0.00	0.00	0.00
S6	0.00	0.00	0.00	0.00	2.54	488.52	0.00	0.00	0.00	0.00	0.00	0.00	0.00	0.00	0.00	0.00	0.00	0.00	0.00	0.00
S8	0.00	0.00	0.00	0.00	5.74	1473.06	11.72	3005.63	0.00	0.00	0.00	0.00	0.00	0.00	0.00	0.00	0.00	0.00	0.00	0.00
Total Flow lbmol/hr	4		219		463		12		124		733		260		164		85		224	
Total Flow lb/hr	120		6,346		15,308		3,006		2,242		13,203		4,677		2,952		1,527		4,042	
Total Flow cuft/hr	737		83,054		195,362		10		37		223		27,119		60		1,057		80	
Temperature F	90		60		650		311		113		242		308		494		497		471	
Pressure psi	30		15		28		25		21		841		75		645		665		655	
Vapor Frac	1.0		1.0		1.0		0.0		0.0		0.0		1.0		0.0		1.0		0.0	
Liquid Frac	0.0		0.0		0.0		1.0		1.0		1.0		0.0		1.0		0.0		1.0	
Enthalpy Btu/lb	3		-4		-1,800		53		-6,827		-6,655		-5,687		-6,386		-5,664		-6,412	
Density lb/cuft	0.16		0.08		0.08		316.18		60.80		59.22		0.17		49.26		1.45		50.50	
Average MW	31.96		28.97		33.07		256.50		18.02		18		18.02		18.02		18.02		18.02	

4/26/2006 14:14

This page intentionally left blank

Exhibit VII.2-12 Waste Water Treatment System Estimated State Point Compositions and Conditions

Syngas to Hydrogen Option - Waste Water Treatment Material Balance

STREAM	60		61		62		63		64		65		66		67	
Description	Tail Gas to Fired Boiler		Recovered Phenol to Gasifier		MIBK Recycle		MIBK Make-Up		De-phenolated Condensate to Stripper		Sour Gas to Claus		Condensate to Metals Treating		Steam Drum Blowdown	
Flow	lbmol/hr	lb/hr	lbmol/hr	lb/hr	lbmol/hr	lb/hr	lbmol/hr	lb/hr	lbmol/hr	lb/hr	lbmol/hr	lb/hr	lbmol/hr	lb/hr	lbmol/hr	lb/hr
AR	0	0	0	0	0	0	0	0	0	0	0	0	0	0	0	0
BTX	0.00	0.00	0.00	0.00	0.00	0.19	0	0	0.00	0.00	0	0	0	0	0	0
CH4	0.02	0.39	0.00	0.00	0.01	0.09	0	0	0.00	0.00	0	0	0	0	0	0
C2H4	0	0	0	0	0	0	0	0	0	0	0	0	0	0	0	0
C2H6	0	0	0	0	0	0	0	0	0	0	0	0	0	0	0	0
C3H6	0	0	0	0	0	0	0	0	0	0	0	0	0	0	0	0
C3H8	0	0	0	0	0	0	0	0	0	0	0	0	0	0	0	0
C4H8	0	0	0	0	0	0	0	0	0	0	0	0	0	0	0	0
C4H10	0	0	0	0	0	0	0	0	0	0	0	0	0	0	0	0
CH3OH	0	0	0	0	0	0	0	0	0	0	0	0	0	0	0	0
CO	0	0	0	0	0	0	0	0	0.01	0.24	0.01	0.24	0	0	0	0
CO2	0	0	0	0	0	0	0	0	3.65	160.6	3.65	160.6	0	0	0	0
COS	0	0	0	0	0	0	0	0	0.00	0.28	0.00	0.28	0	0	0	0
HCN	0	0	0	0	0	0	0	0	0.00	0.08	0.00	0.08	0	0	0	0
HCL	0	0	0	0	0	0	0	0	2.50	91.28	0	0	2.50	91.28	0	0
H2	0	0	0	0	0	0	0	0	0.02	0.04	0.02	0.04	0	0	0	0
H2O	0.05	0.92	0.00	0.00	0.47	8.50	0	0	605.47	10,908	19.55	352.1	585.93	10,555	74.66	1,345
H2S	0	0	0	0	0	0	0	0	0.45	15.33	0.45	15.33	0	0	0	0
MIBK	0.10	10.36	0.00	0.00	11.82	1,184	0.01	0.70	0.00	0.00	0.00	0.00	0	0	0	0
N2	0	0	0	0	0	0	0	0	0	0	0	0	0	0	0	0
NH3	0.01	0.18	0.00	0.00	0.02	0.29	0	0	9.11	155.1	9.09	154.8	0.02	0.31	0	0
O2	0	0	0	0	0	0	0	0	0	0	0	0	0	0	0	0
PHENOL	0.00	0.00	1.70	160.2	0.01	0.58	0	0	0.00	0.00	0.00	0.00	0	0	0	0
SO2	0	0	0	0	0	0	0	0	0	0	0	0	0	0	0	0
Total Flow lbmol/hr	0.19		1.70		12.33		0.01		621.22		32.77		588.45		74.66	
Total Flow lb/hr	11.96		160.24		1,194.00		0.70		11,330.72		683.51		10,647.21		1,345.00	
Total Flow cuft/hr	89.81		2.68		33.80		0.01		2,724.15		3,874.17		1,725.09		9,614.52	
Temperature F	210		313		210		100		69		210		246		459	
Pressure psi	14.9		15.0		15.0		25.0		15.0		35.0		38.0		75.0	
Vapor Frac	1		0		0		0		0		1		0		1	
Liquid Frac	0		1		1		1		1		0		1		0	
Enthalpy Btu/lb	-1,545		-585		-1,367		-1,388		-6,710		-4,450		-6,625		-5,605	
Density lb/cuft	0.1332		59.8696		35.3251		48.7603		4.1594		0.1764		6.1720		0.1399	
Average MW	62.8262		94.1130		96.8594		100.1607		18.2395		20.8571		18.0937		18.0153	

4/26/2006 14:29

This page intentionally left blank

Exhibit VII.2-13 Steam System Estimated State Point Compositions and Conditions

Syngas to Hydrogen Option - Steam System Material Balance

STREAM	100	101	102	103	104	105	106	107	108	109	110	111	112	113	114
Description	Steam to MIBK Stripper	Steam to Steam Stripper	Steam to Methanol Heater	LP Steam from WHB	Flash Tank Overheads	Steam to Methanol Stripper	Steam to Rectisol Unit	Steam to Waste Water Treatment	Steam to Gas/Liquor Heater	Process Steam	Condensate from Oxidant Heater	Make-Up	BFW to LP Steam Drum	BFW to Claus Unit	MP Steam to LP Header
H2O Mass Flow, lb/hr	486	470	101	17,610	2,272	2,190	14,797	3,305	1,611	3,126	3,796	33,243	18,305	13,203	470
Total Flow lbmol/hr	26	26	6	996	126	121	821	183	89	192	211	1,675	1,016	733	26
Total Flow lb/hr	486	470	101	17,939	2,272	2,190	14,797	3,305	1,611	3,453	3,796	30,174	18,305	13,203	470
Total Flow cuft/hr	899	870	187	104,330	13,214	12,735	86,003	19,209	9,368	20,072	75	484	310	223	870
Temperature F	403	403	403	308	308	308	308	308	308	308	465	60	240	242	403
Pressure psi	250	250	250	75	75	75	75	75	75	75	490	50	150	841	250
Vapor Frac	1.0	1.0	1.0	1.0	1.0	1.0	1.0	1.0	1.0	1.0	0.0	0.0	0.0	0.0	1
Liquid Frac	0.0	0.0	0.0	0.0	0.0	0.0	0.0	0.0	0.0	0.0	1.0	1.0	1.0	1.0	0
Enthalpy Btu/lb	-5,664	-5,664	-5,664	-5,685	-5,685	-5,685	-5,685	-5,685	-5,685	-5,685	-6,419	-6,838	-6,657	-6,655	-5664
Density lb/cuft	0.5404	0.5404	0.5404	0.1719	0.1719	0.1721	0.1721	0.1721	0.1721	0.1721	50.7432	62.3811	59.1007	59.2168	0.5404
Average MW	18.0153	18.0153	18.0153	18.0153	18.0153	18.0153	18.0153	18.0153	18.0153	18.0153	18.0153	18.0153	18.0153	18.0153	18.0153

5/23/2006 20:57

This page intentionally left blank

Exhibit VII.2-14 Syngas-fired Boiler System Estimated State Point Compositions and Conditions

Syngas to Hydrogen Option - Fired Boiler Material Balance

STREAM	80		81		82		83		84		85		86	
Description	Air to Fired Boiler		Flue Gas to Stack		BFW from Deaerator		Steam to Oxidant Heater		Hydrogen Product		PSA Tail Gas		Syngas Product	
Flow	lbmol/hr	lb/hr	lbmol/hr	lb/hr	lbmol/hr	lb/hr	lbmol/hr	lb/hr	lbmol/hr	lb/hr	lbmol/hr	lb/hr	lbmol/hr	lb/hr
AR	211	8,412	214	8,543	0	0	0	0	0.00	0	0.00	0	1.05	42
BTX	0	0	0	0	0	0	0	0	0.00	0.00	0.00	0	0.12	11
CH4	0	0	0	0	0	0	0	0	0.2	3	1.59	25	419.52	6,730
C2H4	0	0	0	0	0	0	0	0	0.00	0	0.01	0	1.95	55
C2H6	0	0	0	0	0	0	0	0	0.00	0.0	0.04	1	9.87	297
C3H6	0	0	0	0	0	0	0	0	0.00	0.00	0.00	0	0.20	8
C3H8	0	0	0	0	0	0	0	0	0.00	0.0	0.01	1	3.80	168
C4H8	0	0	0	0	0	0	0	0	0.00	0.00	0.00	0	0.01	1
C4H10	0	0	0	0	0	0	0	0	0.00	0.0	0.00	0	0.19	11
CH3OH	0	0	0	0	0	0	0	0	0.00	0.00	0.00	0	0.00	0
CO	0	0	0	0	0	0	0	0	0	1	15.52	435	4,097.87	114,781
CO2	0	0	5,098	224,354	0	0	0	0	0	0	0.04	2	9.43	415
COS	0	0	0	0	0	0	0	0	0.00	0.00	0.00	0	0.00	0
HCN	0	0	0	0	0	0	0	0	0.00	0.00	0.00	0	0.00	0
HCL	0	0	0	0	0	0	0	0	0.00	0.00	0.00	0	0.00	0
H2	0	0	0	0	0	0	0	0	1,494	3,011	3.03	6	801.22	1,615
H2O	0	0	1,847	33,266	2,017	36,343	211	3,796	0.00	0.00	0.00	0	0.00	0
H2S	0	0	0	0	0	0	0	0	0.00	0.00	0.00	0	0.03	1
MIBK	0	0	0	0	0	0	0	0	0.00	0.00	0.00	0	0.00	0
N2	16,424	460,103	16,888	473,098	0	0	0	0	0.1	4	1.07	30	282.04	7,901
NH3	0	0	0	0	0	0	0	0	0.0	0.0	0.00	0	0.00	0
O2	4,422	141,491	843	26,988	0	0	0	0	0.0	0.0	0.00	0	0.00	0
PHENOL	0	0	0	0	0	0	0	0	0.0	0.0	0.00	0	0.00	0
SO2	0	0	0.076	4.893	0	0	0	0	0.0	0.0	0.00	0	0.00	0
Total Flow lbmol/hr	21,056		24,890		2,017		211		1,494		21		5,627	
Total Flow lb/hr	610,000		766,250		36,344		3,796		3,019		500		132,037	
Total Flow cuft/hr	7,985,180		13,434,400		614		4,741		30,997		6,958		1,837,540	
Temperature F	60		280		242		680		90		70		70	
Pressure psi	14.7		14.7		900.0		510.0		287.0		17		17	
Vapor Frac	1		1		0		1		1		1		1	
Liquid Frac	0		0		1		0		0		0		0	
Enthalpy Btu/lb	-4		-1,326		-6,654		-5,521		44		-1,595		-1,595	
Density lb/cuft	0.0764		0.0570		59.2266		0.8007		0.0974		0.0719		0.0719	
Average MW	28.9697		30.7858		18.0153		18.0153		2.0207		23.4637		23.4637	

5/23/2006 14:43

This page intentionally left blank

VII.3 PLOT PLAN AND SITE LAYOUT

A conceptual general equipment arrangement and plot plan is shown in Exhibit VII.3-1. The land requirement for the Syngas and H_2 Production Reference Plant is estimated to be about 8 acres not including the ASU. About 0.8 acres of this is allocated for 14 days coal and limestone storage (about 16,000 tons of coal and 500 tons of limestone). The area allocated for the gasifier process package is about 0.2 acres, and includes sufficient area for addition of a spare gasifier. An additional 2.6 acres is estimated for the ASU plant and supporting systems.

An elevation drawing of a conceptual BGL gasification package installation containing one operating and one spare gasifier is shown in Exhibit VII.3-2. The overall height of the structure housing the equipment, including height required for coal and limestone feed system above each gasifier and that required for slag removal system below the gasifier, is about 115 feet.

Exhibit VII.3-1 Conceptual General Equipment Arrangement and Plot Plan for the Syngas and H_2 Co-production Reference Plant

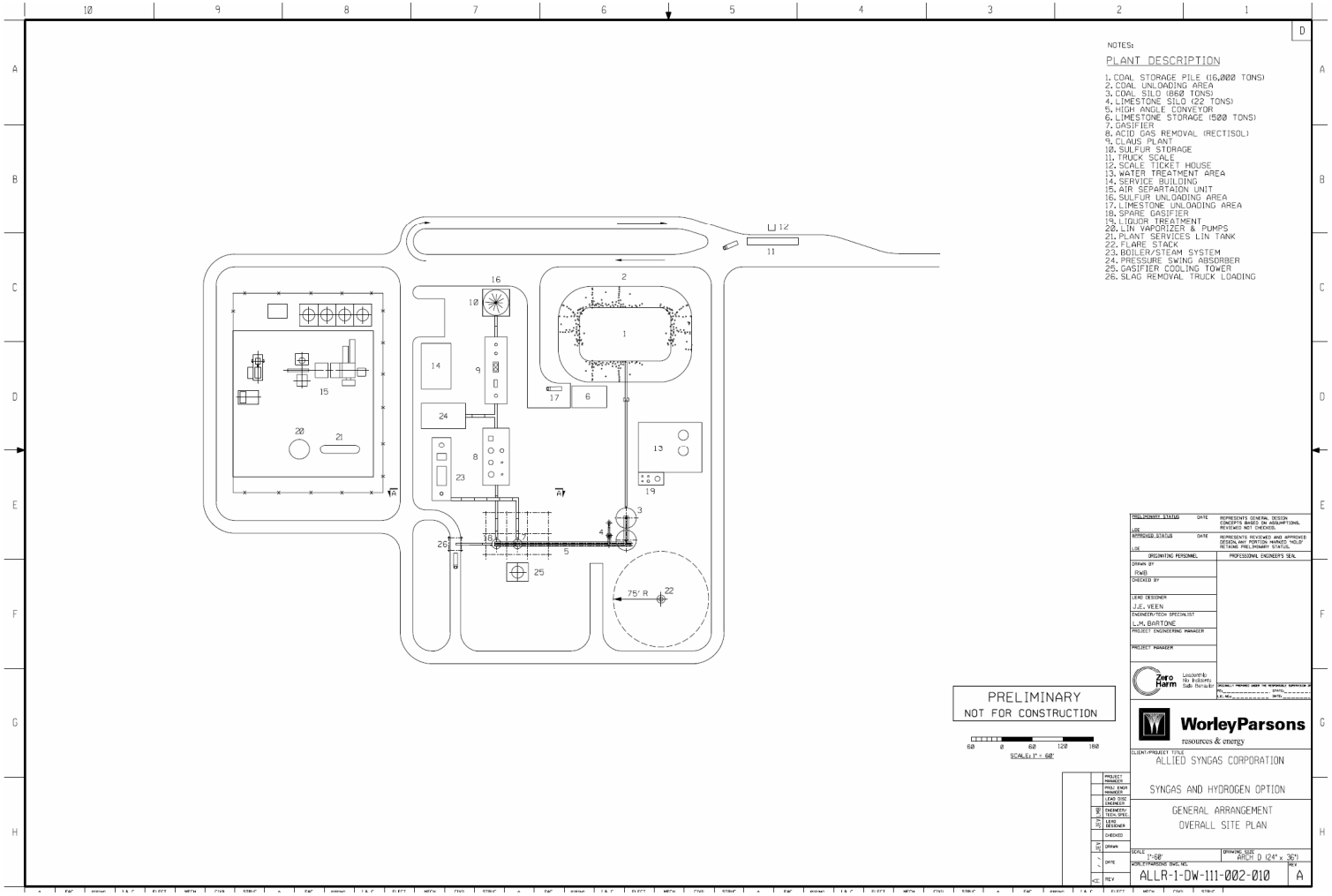

Exhibit VII.3-2 Conceptual Elevation of Gasification Process Installation

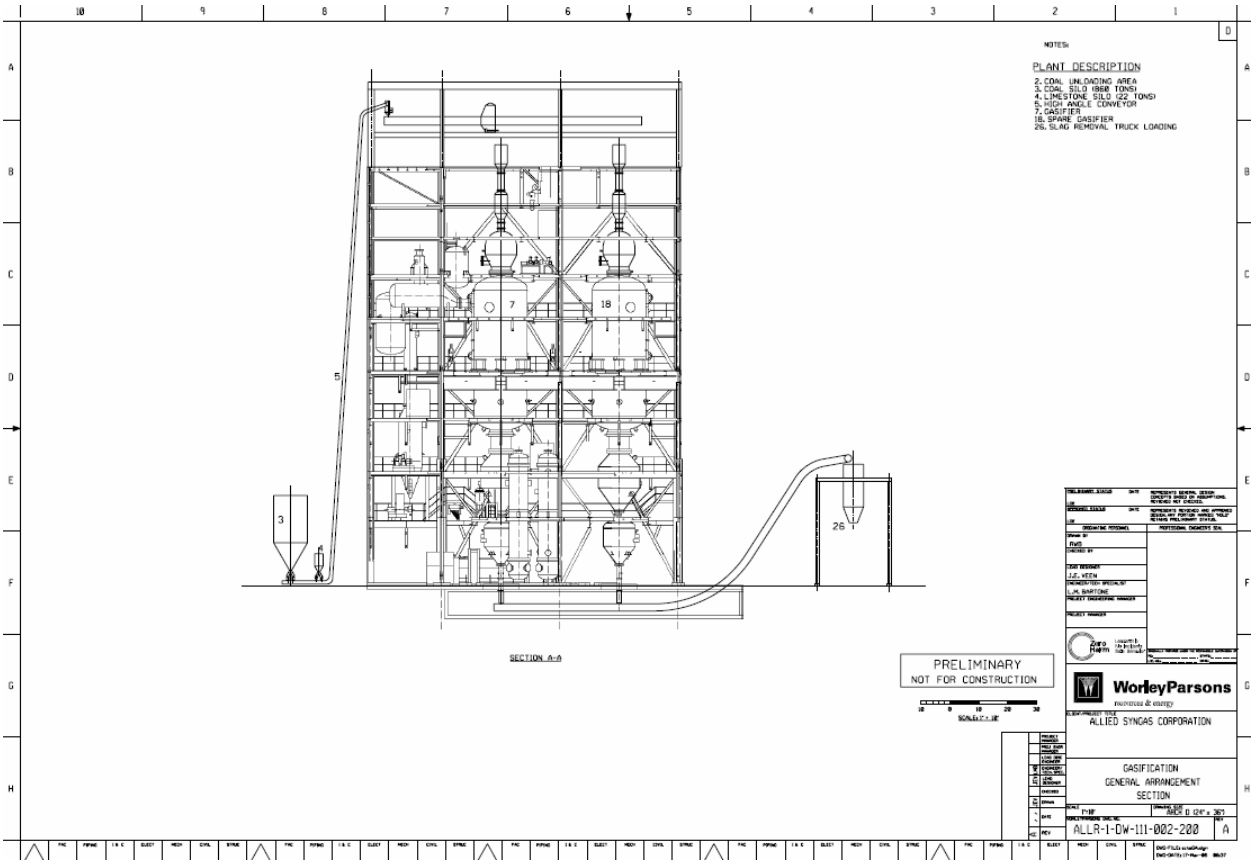

This page intentionally left blank

VII.4 SOLIDS HANDLING SYSTEMS DESCRIPTIONS

VII.4.1 COAL RECEIVING, STORAGE, AND HANDLING

Illinois #6 coal, presized to ¼" x 2", is received, stored, mixed with limestone (flux), transported to the gasifier, and fed into the gasifier lock hopper. A simplified process flow diagram of the system and equipment general arrangements are shown in Exhibit VII.4-1 and Exhibit VII.4-2.

VII.4.1.1 Coal Receiving and Storage

The coal receiving and storage system receives coal, meeting the specifications defined in the Design Requirements Document, from delivery trucks and stores the coal in an outdoor area for reclaim and transport to the gasifier feed system. The system is designed to receive and unload a minimum of 10 coal delivery trucks per hour (70 trucks per day). This allows for receipt of 7 days gasifier consumption at 100% load in 5 days, with unloading occurring over a 7 hour period per day. Trucks will not normally be received at night or on weekends. Coal trucks may range from a 23 ton net tri-axle up to a "Kentucky" type truck rated for 50 ton net weight. The system includes a truck scale for weighing delivery trucks entering and leaving the plant.

The outdoor coal storage area, measuring about 150 ft. by 200 ft., is sized to store about 16,000 tons of coal, sufficient to fuel the gasifier for 14 days at full operating capacity.

VII.4.1.2 Coal Handling and Preparation System

The Coal Handling and Preparation System is designed to perform the following functions:

- Reclaim as-received coal from the coal storage area,
- Screen the coal to remove any material greater than 2" in size,
- Remove magnetic material,

- Store the prepared coal in day bins (18 hour), and
- Meter coal from the day bins to a gasifier feed conveyor.

Coal is reclaimed from the long-term storage pile by a 40 ft. long, 18 degree reclaim feeder and delivered to a vibrating screen at a rate of 250 tons per hour, as shown in Exhibit VII.4-1. The vibrating screen separates oversized (>2") material onto an oversize conveyor that transports the oversized material to an oversized material pile. Coal meeting the top size specification is transported via a high angle conveyor to a reversible belt conveyor that distributes the coal to two, 60° cone type storage silos, each with a capacity of 430 tons. The high angle conveyor consists of two motor driven belts between which the solid material to be transported is sandwiched. An example of a Snake Sandwich High Angle Conveyor manufactured by Dos Santos International for feeding two coal silos is shown in Exhibit VII.4-3. High angle conveyors are used to minimize the land requirement for the syngas production plant. The two silos are steel vessels each 32 feet in diameter with straight shell heights of 45 feet. The total silo capacity is sufficient for 18 hours coal consumption by the gasifier at 100% load. On its way to the silos, the coal is passed through a magnetic material separator where magnetic material is removed and dumped into a container for disposal, and is weighed via a coal scale to measure the quantity of coal being fed to the silos.

Coal is metered from each day silo by a silo discharge feeder onto one of two 100% capacity high angle gasifier feed conveyors, via a two-way diverter gate at the discharge of each silo, at a rate of about 47.7 short tons/hour.

VII.4.2 LIMESTONE RECEIVING, STORAGE, AND HANDLING

Limestone, pre-sized to ¼" x 3/4", is received, stored, mixed with coal, transported the active gasifier, and fed into the gasifier lock hopper. A simplified process flow diagram of the system and equipment general arrangements are also shown in Exhibit VII.4-1 and Exhibit VII.4-2.

VII.4.2.1 Limestone Receiving and Storage

The limestone receiving and storage system receives limestone, meeting the specifications defined in the Design Requirements Document, from delivery trucks and stores the limestone in an outdoor area for reclaim and transport to the gasifier feed system. The system is designed to receive and unload a minimum of two, 23-ton limestone delivery trucks in a 7-hour period each day. This

allows for receipt of 7 days gasifier consumption at 100% load in 5 days. Trucks will not normally be received at night or on weekends. The limestone delivery trucks will be weighed as they enter and leave the facility via the same scales as used for weighing the coal delivery trucks.

The outdoor limestone storage area, measuring about 34 ft. by 55 ft., is sized to store about 500 tons of limestone, sufficient to fuel the gasifier for 14 days at full operating capacity.

VII.4.2.2 Limestone Handling and Preparation System

The Limestone Handling and Preparation System is designed to perform the following functions:

- Reclaim as-received limestone from the coal storage area,
- Store the limestone in a day bin (18 hour), and
- Meter limestone from the day bin to a gasifier feed conveyor.

Limestone is reclaimed from the long-term storage via a front end loader and placed in a reclaim screw feeder hopper, as shown in Exhibit VII.4-1. A screw feeder then transports the limestone at a rate of 10 tons per hour to a high angle conveyor that transports the limestone to a 60° cone type storage silo having a capacity of 22 tons, sufficient for 18 hours consumption by the gasifier at 100% load. An example of a Snake Sandwich High Angle Conveyor manufactured by Dos Santos International for feeding the limestone silo is shown in Exhibit VII.4-4. The silo is a steel vessel, 8 feet in diameter with straight shell height of 12 feet.

Limestone is metered from the day silo by a silo discharge feeder onto one of two 100% capacity high angle gasifier feed conveyors, via a two-way diverter gate at the discharge of the silo, at a rate of about 1.2 tons/hr.

VII.4.3 COAL/LIMESTONE GASIFIER DELIVERY SYSTEM

The coal and limestone gasifier delivery system conveys the coal and limestone mixture to the gasifier feed lock hopper. Coal and limestone from the day bins are transported via one of two 100% high angle gasifier feed conveyors to a 50-ton weigh hopper located above the active gasifier feed lock hopper. The weigh hopper's capacity is equivalent to one hour's consumption by the gasifier at 100% load. An example of a Snake Sandwich High Angle Conveyor manufactured by Dos Santos International for feeding coal/limestone

to the weigh hopper is shown in Exhibit VII.4-5. Approximately 7 tons of coal/limestone mixture is metered from the 50-ton weigh hopper into a 7-ton hopper located between the 50 ton weigh hopper and the gasifier. At approximately 10 minute intervals, the coal/limestone mixture in the 7-ton hopper is dumped into the gasifier feed lockhopper.

Exhibit VII.4-1 Simplified Process Flow Diagram of Coal and Limestone Receiving, Storage, and Handling System

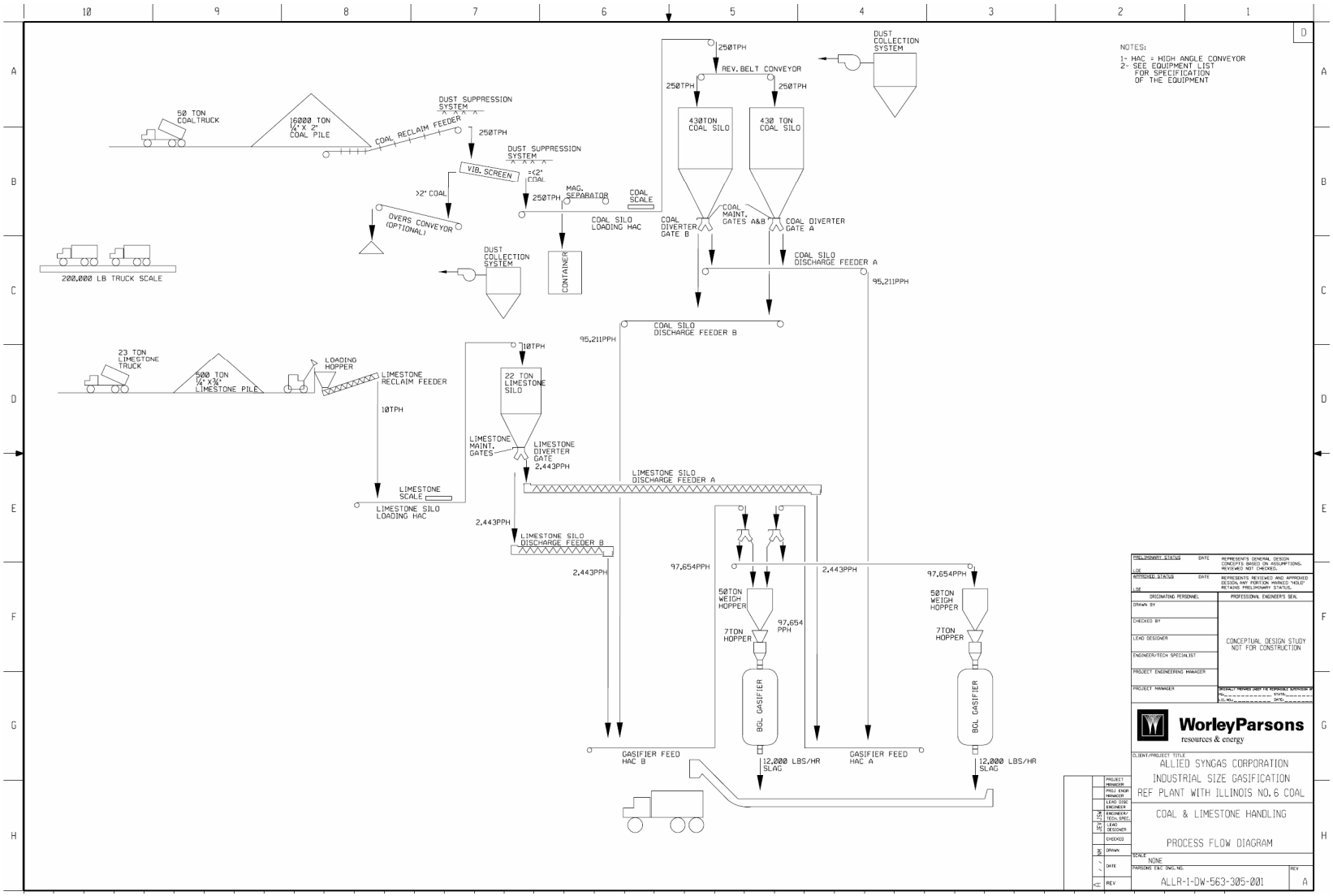

Exhibit VII.4-2 Coal and Limestone Storage and Handling Systems General Arrangement

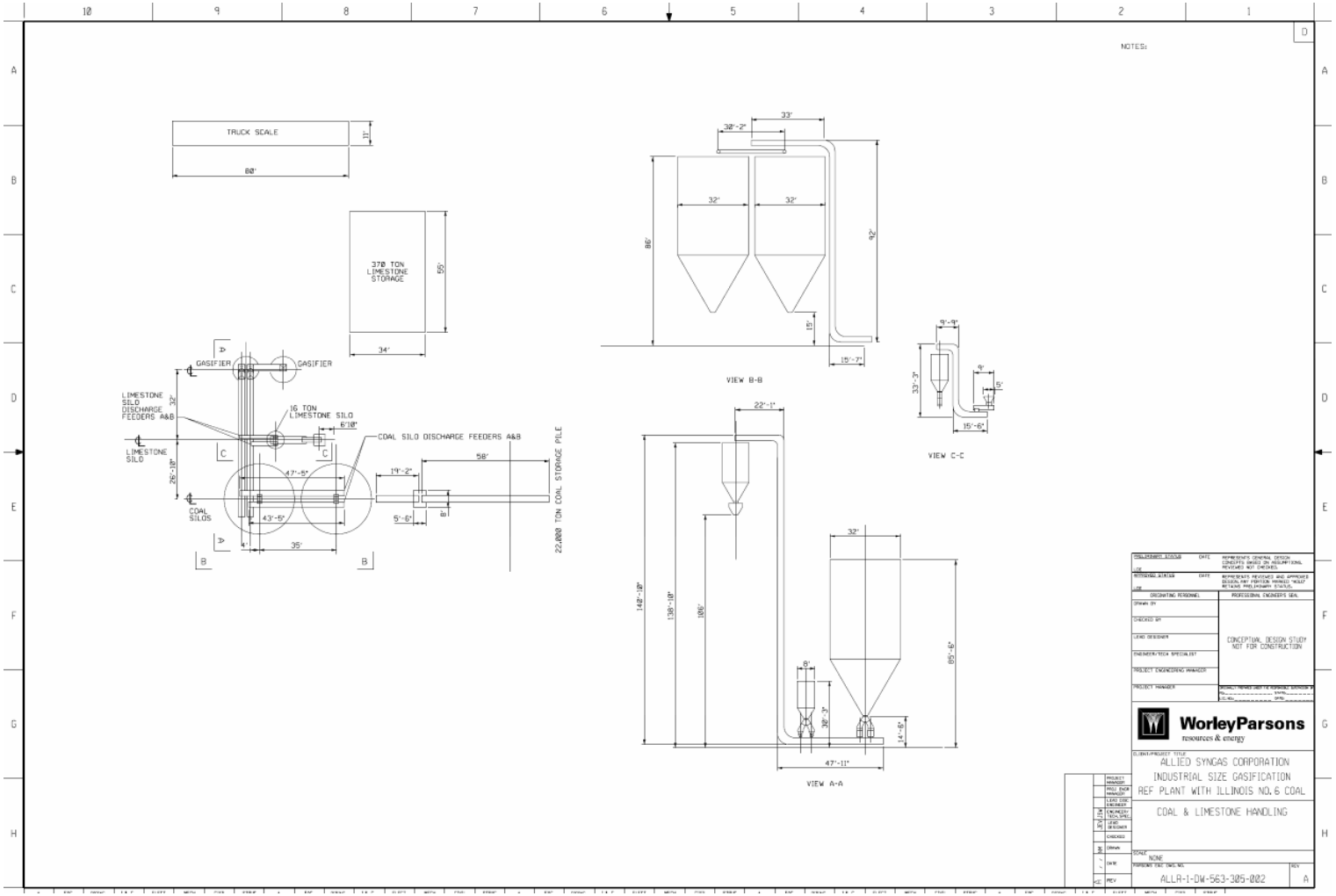

Exhibit VII.4-3 Example of Snake Sandwich High Angle Conveyor by Dos Santos International for Feeding Coal Silos

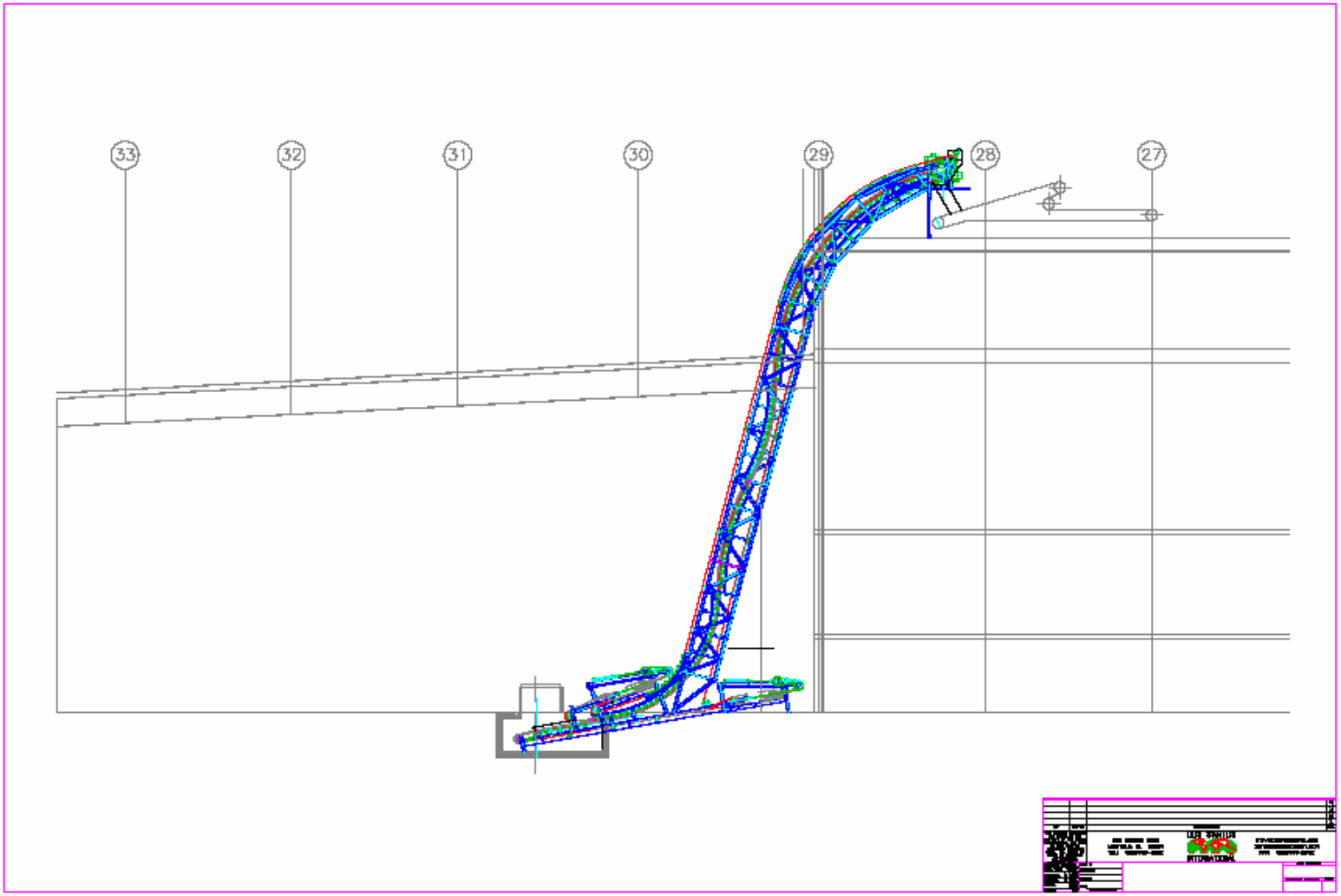

Exhibit VII.4-4 Example of Snake Sandwich High Angle Conveyor by Dos Santos International for Feeding Limestone Silo

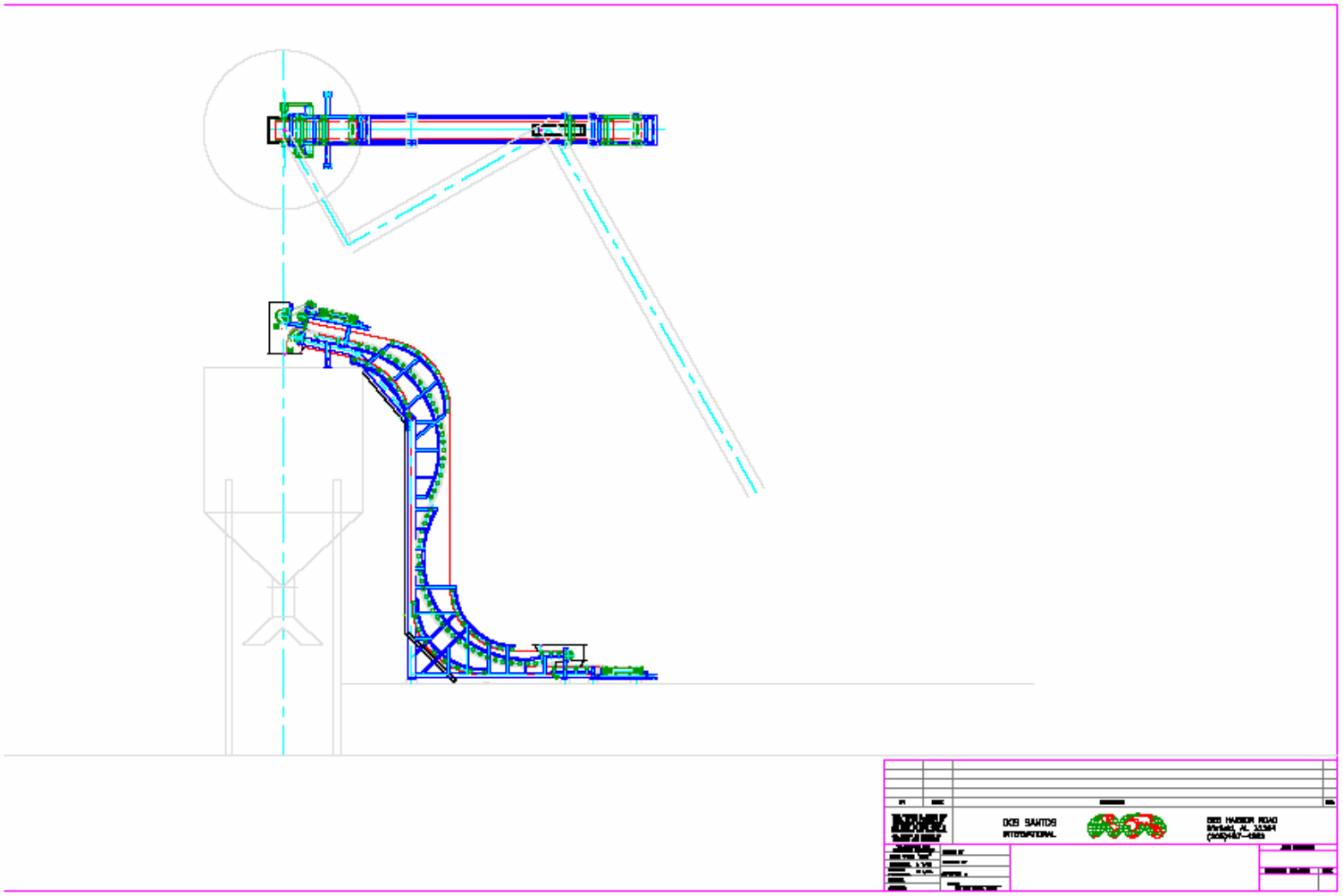

Exhibit VII.4-5 Example of Snake Sandwich High Angle Conveyor by Dos Santos International for Feeding Coal/Limestone to Gasifier Hopper

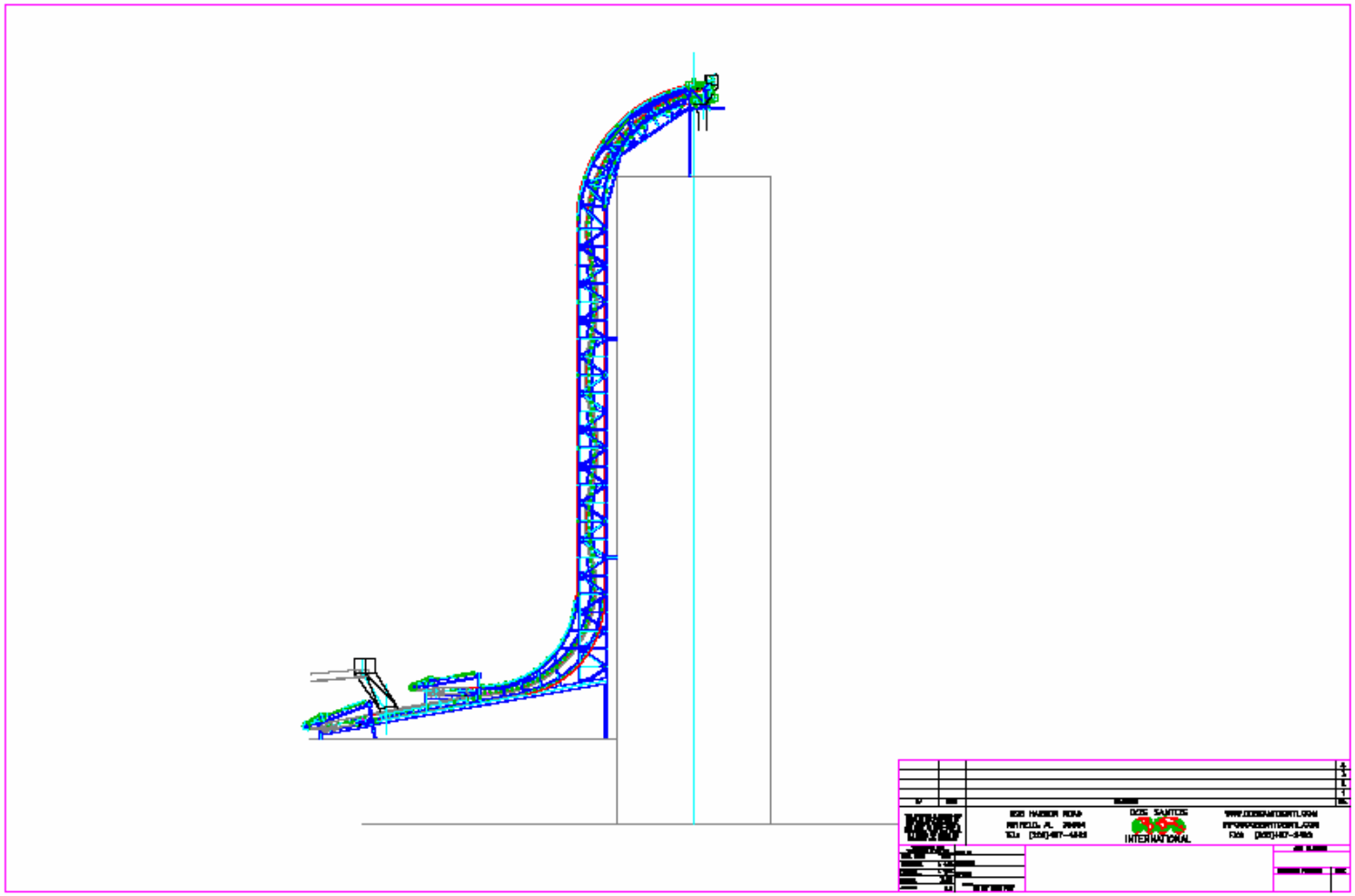

VII.4.4 SLAG HANDLING

The slag handling system collects approximately 7 tons/hour of slag from the gasifier slag lock hopper and transports it to a storage/truck loading area for sale as a byproduct or disposal. The system consists of a water-filled trough with drag-chain conveyor that transports the slag to a truck loading station.

The system will be controlled via a stand alone PLC with DCS interface, and will be provided with instrumentation and components as required for a complete functional, reliable, and safe operating system.

VII.5 GASIFIER PROCESS PACKAGE DESCRIPTION

The gasifier process package includes the following:

- Two gasifiers (one operating and one spare) each with coal, limestone, oxygen, steam, and nitrogen feed systems; a slag removal system; and a syngas wash cooler
- Primary syngas heat exchanger (waste heat exchanger)
- Syngas coolers
- Gas/liquor separation and tar/oil reinjection system.

Refer to the conceptual process flow diagram in Exhibit VII.2-3 and the table in Exhibit VII.2-9 for estimated state point compositions and conditions for the gasifier process package.

VII.5.1 GASIFIER

The BGL gasifier is a slagging, fixed bed gasification process utilizing counter current gas/solid flow. It is designed to process about 1,145 tons/day of Illinois #6 coal. A concept sketch of the gasifier is shown in Exhibit VII.5-1. Coal is introduced into the top of the gasifier through a feed lock. The gasification agents, steam and oxygen, are injected through the tuyeres in the lower part of the gasifier into a hot fuel bed. Gaseous reaction products ascend countercurrent to the coal. A stirrer is incorporated in the top of the gasifier when the fuel is a caking coal to ensure smooth continuous flow of coal into the gasifier.

The gasifier is designed to achieve a smooth transition of the fuel from the solid to the gaseous phase. Essentially cold solids that enter at the top of the reactor are heated by hot gases rising from the bottom. The counter-current principle results in one of the lowest oxygen consumption rates of commercial gasification processes.

Exhibit VII.5-1 Schematic of Gasifier

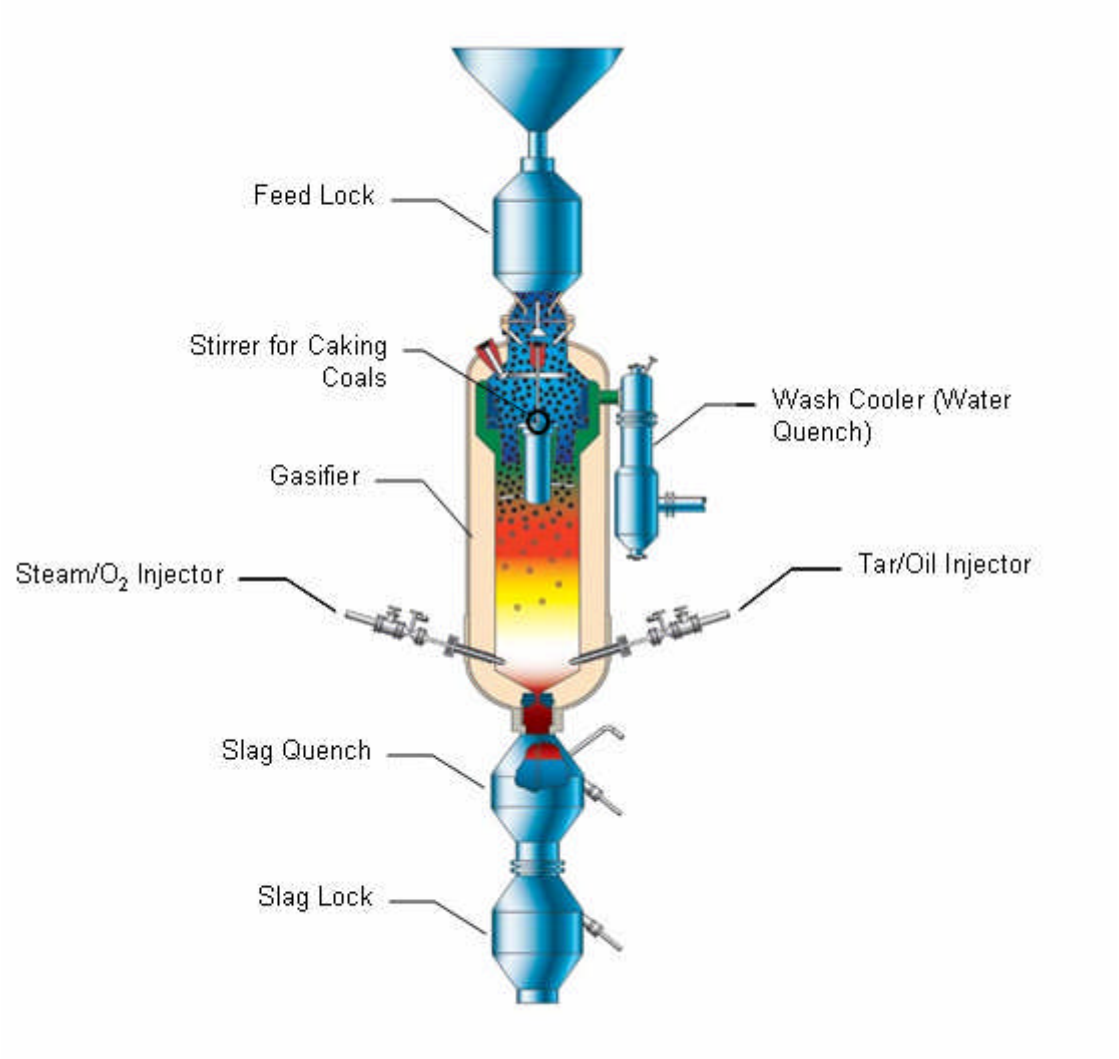

Upon further devolatilization, the coal yields a char or semi-coke that is mainly a carbon skeleton. This process is known as "char conditioning." The formation of well conditioned char within the stirred zone favors good bed behavior.

The gasifier operates at elevated pressure (about 350 psia). The elevated pressure leads to smaller main equipment dimensions and reduces effective gas volume that makes the downstream units smaller in volume and simpler in design.

Liquid slag is discharged by a tap hole arranged centrally at the bottom of the hearth into a water bath in the slag quench vessel. Through rapid cooling, the slag is converted into a solid frit that can simply be disposed of or utilized further.

The gasification media – steam and oxygen – are injected into the gasifier through water-cooled nozzles (tuyeres). Steam and oxygen react immediately with the coke from the gasification zone to form mainly hydrogen and carbon monoxide.

The upward flowing crude gas leaves the fuel bed with a low velocity so that the dust discharge with the gas is minimized.

The crude gas exiting the gasifier enters a wash cooler where the gas is washed intensely with gas liquor, quenched, and saturated with steam. Simultaneously, higher hydrocarbons (tar) condense and dust from the gas is removed. The raw gas is then routed to the first gas cooling stage (waste heat boiler).

VII.5.2 COAL/LIMESTONE FEED SYSTEM

As mentioned previously, the gasification process is under pressure. The coal and limestone (flux) solid mixture is fed to the gasifier reactor via a feed lock operated on a batch basis, loading about 7 tons of coal/limestone mixture during each loading cycle. A limited fuel storage capacity is kept in the top of the gasifier, adding to the safety of the process as it allows the process to continue even if coal lock problems occur. The coal/limestone batch lock hopper cycling contains the following steps:

- Starting with an empty depressurized coal/limestone lock, the bottom cone valve is closed and the top cone valve is opened. Coal and limestone drop by gravity from a weigh hopper, containing only enough coal/limestone mixture to fill the lock, into the lock.
- The top cone valve is then closed and the lock is pressurized with high pressure nitrogen from the ASU plant.
- The bottom cone valve is opened and the fuel gravitates into the gasifier. The system is designed such that for safety reasons the bottom cone valve can be opened only at an even pressure between the gasifier and lock.
- When the lock is empty, the bottom cone valve is closed automatically and the lock is depressurized.
- The top cone valve is opened, the remaining gas is ejected via a dust filter and exhaust gas blower.
- The cycle is then repeated.

VII.5.3 SLAG REMOVAL SYSTEM

The slag removal system consists of a natural gas (or syngas) ring burner, slag quench tank, and slag lock. About 7 tons/hr of slag is intermittently tapped and water quenched automatically, to form a frit that is locked out of the system before being collected and transported for disposal or utilization.

To maintain temperature of the slag pool in the hearth, to prevent tap blockage, and to consume any remaining coke particles, a ring burner is installed underneath the central tap hole of the gasifier. Hot burner gases flow through the slag nozzle into the gasifier and keep the slag in the hearth. After a specific slag height has been reached, as indicated by the differential pressure, the burner is automatically switched to part load operation. The excess pressure of the quench vessel is slightly reduced (below the gasifier pressure) and the liquid slag is discharged through the slag tap into a water-filled slag quench vessel. Upon reaching the minimum slag level, the burner returns to normal operating mode and the tapping is ended. The slag level is controlled automatically via a differential pressure between the quench vessel and slag hearth.

When quenched, the slag forms a glassy granular fritted material of approximately 1/8 inch in diameter. The granular material gravitates further into the water filled slag lock. The sensible heat of the slag is removed via a cooling circuit.

The slag lock works according to the same principle as the coal/limestone lock. It is filled with water and pressurized. The slag is discharged, via a chute, onto a slag conveyor belt and transported to intermediate storage.

VII.5.4 SYNGAS WASH COOLER

Raw gas leaves the top of the gasifier above the fuel bed at a temperature less than 1000°F and enters the wash cooler (water quench) directly flanged to the gasifier. The raw gas is directly quenched, cooled, and saturated by circulated gas liquor from the gas liquor separation system. The raw gas temperature is reduced to about 330°F. Simultaneously, dust carried with the gas and tar is removed from the gas.

The multi-phase flow from the wash cooler is then directed to the waste heat exchanger (primary heat exchanger).

VII.5.5 WASTE HEAT EXCHANGER (PRIMARY HEAT EXCHANGER)

The raw gas from the wash cooler enters the primary heat exchanger and is cooled to about 311°F by transferring heat to boiler feed water and generating about 17,939 lb/hr of low pressure steam (75 psia / 309°F). Gas liquor and hydrocarbon condensate are discharged automatically from the sump of the heat exchanger to the gas liquor separation unit.

VII.5.6 SYNGAS COOLING SYSTEM

Approximately 202,580 lb/hr of syngas from the primary heat exchanger is cooled via three tubular heat exchangers from about 311°F to about 95°F before it is transported to the syngas cleanup process. Approximately 2.9 million lb/hr of circulating water is used to cool the syngas. Gas liquor condensate from the coolers is discharged to the liquor separation process for removal of hydrocarbons and then to the liquor treatment system prior to recycling the waste water or discharging it to the environment. Approximately 158,346 lb/hr of cooled syngas leaves the system and is transported to the syngas cleanup system.

VII.5.7 GAS LIQUOR SEPARATION AND TAR/OIL REINJECTION SYSTEM

The gas liquor separation and tar/oil reinjection system removes tars and oils from the gas liquor from the primary heat exchanger (waste heat exchanger) and syngas coolers and recycles the tars/oils back to the gasifier.

The tars, oils, and solids are removed from the gas liquor by gravity separation, achievable by an adequate settling time in the tar and condensate separators, and a sufficient difference in the specific gravity between water and the tar/oil fractions. Tars and oils are collected in a liquids products tank, along with BTX from the Rectisol AGR system and phenol from the waste water treatment system. The liquid products (about 7,960 lb/hr) are recycled from the tank to the gasifier. Phenol containing gas liquor condensate from the separation system is transported to the waste water treatment system. Sour gas from the separation system is sent to the Claus unit for sulfur recovery. Cooling water is supplied to the system from the circulating water system, and about 1,611 lb/hr of steam to heat liquor in the separation system is provided from the low pressure steam header in the steam system.

This page intentionally left blank

VII.6 SYNGAS CLEANUP SYSTEM DESCRIPTION

The syngas cleanup system consists of an acid gas removal (AGR) system, and sulfur production system. The AGR system utilizes a Rectisol process to concentrate and remove sulfur in the form of H_2S and COS and trace contaminants from the syngas prior to the syngas being transported to the end-user. The Rectisol process was selected based on results of a preliminary evaluation of commercially available AGR technologies, as discussed in the Conceptual Design Requirements Document in Section V.

Sour gas from the Rectisol process enters a Claus process for production of elemental sulfur byproduct from the H_2S. Refer to the conceptual process flow diagrams in Exhibit VII.2-4 and Exhibit VII.2-5, and the tables in Exhibit VII.2-10 and Exhibit VII.2-11 for estimated state point composition and conditions for the AGR and sulfur production systems.

Data from tests on a BGL gasification process indicate that greater than 90% of the mercury entering the system with the coal reports to the gas liquor stream, and levels below detectable limits report to the syngas. Therefore, it is not anticipated that additional mercury removal from the syngas will be required, and no mercury removal system is included in the reference plant. However, if future testing indicates that additional mercury removal is required to meet environmental criteria, this could be accomplished via an activated

VII.6.1 RECTISOL PROCESS DESCRIPTION

The approximately 158,346 lb/hr of raw gas from the syngas coolers enters an H_2S absorber after being cooled by cleaned syngas leaving the absorber. In the absorber, the raw gas is washed and clean of not only H_2S and COS, but also HCN, NH_3, and BTX. The majority of the methanol is recovered in a hot regenerator and methanol stripper. A small amount of fresh methanol is required (about 30 lb/hr)

The raw gas is first prewashed in the bottom section of the absorber and then enters the main section of the absorber via a chimney tray. Laden prewash methanol leaving the bottom of the absorber is routed to a sour flash. The sour gas from the sour flash is directed to the Claus plant. The liquid from the sour flash is sent to a stabilizer tank, where water is introduced, and then to a decanter. BTX from the decanter is transported to the liquids product tank in the gas liquor separation system for recycle back into the gasifier. The remaining liquid from the decanter is heated by low pressure steam prior to being introduced into the methanol stripper. Water from the stripper is directed to the waste water treatment system.

The sulfur-free gas (less than 3 ppmv (<0.3 gr/100scf) total sulfur) leaving the absorber at the top at a pressure of about 300 psia is reheated in a raw syngas cooler. The major portion of the syngas (135,556 lb/hr) is transported to the PSA process and a small portion is sent to the hydroregeneration reactor in the Claus unit. An additional 23,702 lb/hr of flash gas from the AGR is directed to a syngas-fired boiler to produce steam for the gasifier and oxygen heater. About 7,192 lb/hr of acid gas and 809 lb/hr of sour gas from the Rectisol process is transported to the Claus sulfur recovery unit.

The laden methanol leaving the main stage of the H_2S absorber is fed to a flash regenerator for recovery of the bulk of the co-absorbed CO_2 as well as the CO and H_2 which are also co-absorbed in very small amounts. Tail gas from the Claus unit is also compressed and fed to the flash regenerator. The gas that leaves the flash regenerator at a pressure of about 30 psia is transported to a syngas-fired boiler to generate steam for the gasifier and oxygen heater.

The methanol from the flash regenerator enters the hot regenerator for final regeneration by stripping with methanol vapor generated in a reboiler by means of low pressure steam. The acid gas leaving the top of the regenerator is cooled to recover methanol, which is recycled to the regenerator. The acid gas is then transported to the Claus unit for recovery of the sulfur in the gas. Hot regenerated methanol is pumped back to the H_2S absorber via a refrigeration cooler. Water from the methanol stripper is directed to the waste water treatment system.

Approximately 136,100 lbs/hr of cooling water required for the approximate 2.45 MMBtu/hr cooling duty in the process is supplied by the circulating water system. About 14,800 lb/hr of low pressure (75 psia) steam required for the process is supplied from the low

pressure steam header in the steam system. Refrigerant for cooling the various flow streams is supplied by a refrigeration system requiring about 1,570 kW of electrical power. Pumping and compressor power requirements for the Rectisol process total about 2,000 kWe.

VII.6.2 CLAUS PROCESS DESCRIPTION

The Claus process recovers about 99% of sulfur from the acid gas and sour gas from the Rectisol, liquor separation, and waste water treatment processes in the form of elemental sulfur. The Claus process consists of a Claus furnace and two catalytic stages. The oxidant to the Claus furnace is air enriched to about 30% oxygen by weight. The feed streams are first preheated using steam and then enter the Claus furnace where about 75% of the H_2S is reacted to SO_2. The exhaust is passed through a waste heat boiler to generate steam for the process, and the SO_2 and remaining H_2S in the exhaust is then reacted to sulfur and water in the catalytic stages. Tail gas from the process is hydrogenated and quenched in a water wash tower and then recycled to the flash regenerator in the Rectisol process. Blowdown from the process is sent to the waste water treatment system. Export steam is transported to the low pressure and high pressure steam headers, and condensate to the flash tank in the steam system. Sulfur product is condensed and collected in a sulfur pit for transport to a sulfur product storage area.

About 13,200lb/hr of intermediate pressure (840 psia, 240°F) boiler feed water for steam generation in the Claus process is provided from the deaerator in the steam system. About 570 lb/hr of oxygen is supplied from the ASU. Approximately 222,200 lb/hr of cooling water to provide about 4 MMBtu/hr of cooling duty in the Claus process is supplied by the circulating water system.

About 3,000 lb/hr of elemental sulfur byproduct is produced in the Claus unit in the syngas cleanup system.

This page intentionally left blank

VII.7 HYDROGEN PRODUCTION SYSTEM

A pressure swing adsorption (PSA) system is used to produce hydrogen from the clean syngas exiting the AGR. The PSA consists of multiple vessels for adsorption of gases other than hydrogen, depressurization, and equalization to produce a 99.9% pure hydrogen product. Approximately 135,556 lb/hr of syngas enters the PSA at a pressure/temperature of about 300 psia/80°F. This syngas stream has a hydrogen content of about 32% by volume (3.4% by weight). The hydrogen recovery efficiency of the PSA is about 65%, resulting in a hydrogen product flow rate of about 3,019 lb/hr.

Of the approximate 132,537 lb/hr of CO rich syngas, with a heat content of about 774 MMBtu/hr, about 500 lb/hr is fired along with tailgas from other process in a syngas-fired boiler for generating steam for the gasifier and oxygen heater. The remaining 132,037 lb/hr (769 MMBtu/hr) of syngas product is available for sale to an industrial customer(s). As an alternative, the remaining syngas can be fired in a boiler to produce steam for sale to an industrial customer(s). The steam conditions would be dependent on the needs of the customer, but as an example, approximately 615,800 lb/hr of steam at 510psia/680°F could be produced from the syngas.

This page intentionally left blank

VII.8 WASTE WATER TREATMENT SYSTEM DESCRIPTION

The waste water treatment system treats the waste water and gas liquor condensate from the processes prior to reusing the water for slag cooling or in other processes. Refer to the conceptual process flow diagram in Exhibit VII.2-6 and the table in Exhibit VII.2-12 for estimated state point compositions and conditions for the waste water treatment system.

Waste water comes from the Rectisol unit (methanol stripper bottoms), Claus Unit (blowdown), and waste heat exchanger steam drum blowdown. Gas liquor condensate comes from the gas liquor separation system.

Gas liquor is first introduced into an extraction column. Phenol containing condensate is sent to an MIBK stripper. Phenol from the stripper is recycled to the gasifier via the liquid products tank in the liquor separation system. Tail gas from the stripper is sent to a tail gas burner after it is cooled by cooling water to condense solvents that are recycled to the extraction column.

Dephenolated liquid from the extraction column is sent to a sour gas stripper. Sour gas from the stripper is sent to the Claus unit. Liquid from the stripper is sent to a surge tank, along with water from the Rectisol and Claus units, where calcium oxide (CaO) is added and then sent to a mixing tank where iron chloride ($FeCl_3$) is added to induce precipitation of solids. Solids (sludge) are then separated from the liquid, and the liquid is transported to a biological reactor for final cleanup. The gas from the biological reactor is vented, and the water is discharged in accordance with local regulations or reused in plant processes if it meets process specifications.

About 3,305 lb/hr of low pressure steam (75 psia) and 490 lb/hr of intermediate pressure steam are provided by the steam system for liquor heating and the MIBK stripper in the waste water treatment process. About 25,000 lb/hr of cooling water is supplied by the circulating water system for gas cooling in the process.

This page intentionally left blank

VII.9 PROCESS STEAM SYSTEM DESCRIPTION

The process steam system consists of a steam subsystem that collects and distributes steam from and to various processes, and a syngas-fired boiler system that generates steam for the gasifier and oxygen preheater.

VII.9.1 STEAM SUBSYSTEM

The steam subsystem collects and supplies steam and boiler feed water to the various processes in the syngas production plant. Refer to the conceptual process flow diagram in Exhibit VII.2-7 and the table in Exhibit VII.2-12 for estimated state point compositions and conditions for the steam subsystem.

The system collects low pressure steam from the Claus unit (about 4,680 lb/hr) and waste heat exchanger in the gasification process (about 17,940 lb/hr) in a low pressure steam header for distribution to the Rectisol, waste water treatment, and gas liquor separation systems. The system collects intermediate pressure steam from the Claus unit (1,530 lb/hr) in an intermediate steam header that distributes intermediate pressure steam to the MIBK stripper and steam stripper in the waste water treatment system, and the methanol heater in the Rectisol system. The subsystem also collects the condensate from these processes and the oxygen preheater, adds makeup water, deaerates it, and distributes it to the waste heat exchanger, Claus unit, and syngas-fired boiler.

VII.9.2 SYNGAS-FIRED BOILER SUBSYSTEM

Refer to the conceptual process flow diagram in Exhibit VII.2-8 and the table in Exhibit VII.2-14 for estimated state point compositions and conditions for the syngas-fired boiler subsystem.

The syngas-fired boiler subsystem receives boiler feed water from the steam subsystem and generates about 32,960 lb/hr of 510 psia / 680°F steam for the gasifier (29,160 lb/hr) and oxygen preheater

(3,800 lb/hr) in a fired boiler. Product syngas (7,300 lb/hr) from the Rectisol process and MIBK strip gas (12 lb/hr) from the waste water treatment system provide the 46 MMBtu/hr of fuel energy to the boiler. Exhaust gas from the boiler is directed to a stack for discharge to the environment.

VII.10 FLARE SYSTEM DESCRIPTION

An elevated flare system provides for safe combustion of syngas during gasifier start-up and system upsets. On gasifier start-up, all syngas gas from the gasifier is sent to a gasifier start-up flare until the gasification process has been stabilized on coal. A knock-out vessel removes excess liquids and solids from the gas prior to the gas being introduced into the flare to prevent plugging of the flare system and to minimize emissions during the start-up period. After the gasifier operation is stabilized, the syngas is transported to the gas cleanup system. The syngas from the gas cleanup system is sent to a separate main flare until the syngas meets product specifications. The syngas will also be sent to the main flare system when the performance of any system treating the syngas or gas liquor becomes insufficient to continue safe operation of the system or meet syngas product quality specifications. From an economic standpoint, it is necessary to keep flaring as short as possible. From the emissions point of view, the most important aspect of the stabilization process is to ensure that desulfurization of the syngas and recovery of sulfur take place as quickly as possible.

The flare system is designed to handle the total quantity of syngas produced from the gasifier at 100% load. The height of the flares will be based on a radiant heat level not to exceed 500 Btu/hr/ft^2 at the base of the flares. For purposes of developing the conceptual layout, a flare height of 150 feet and a clear space radius of 75 ft. around the base of the flares were assumed to satisfy the requirements.

This page intentionally left blank

VII.11 CIRCULATING WATER SYSTEM DESCRIPTION

The circulating water system provides cooling water to the gasification process, syngas coolers, Rectisol system, Claus system, liquor separation system, and waste water treatment system. The system consists of a plume-abated, wet-dry mechanical draft cooling tower, pumps, and piping required to remove heat from the cooling water, add makeup water, and distribute the water to the processes. The estimated circulating water requirements for the processes are shown in Exhibit VII.11-1.

Exhibit VII.11-1 Estimated Circulated Cooling Water Requirements

PROCESS	FLOW RATE	SUPPLY TEMPERATURE	RETURN TEMPERATURE
Gasification (incl. syngas coolers)	3,335,643 lb/hr	69°F	87°F
Rectisol	136,111 lb/hr	69°F	87°F
Claus	222,222 lb/hr	69°F	87°F
Waste Water Treatment	25,000 lb/hr	69°F	87°F
Total	3,718,976 lb/hr		

This page intentionally left blank

VII.12 PROCESS WATER SUPPLY SYSTEM

The process water supply system provides demineralized makeup water to the AGR (Rectisol), steam, and circulating water systems. The system also provides water for slag cooling. The estimated process makeup water requirements are shown in Exhibit VII.12-1. A detailed optimization of water recycling in the plant was not performed. The estimates for makeup water required do take into account use of water from the waste water treatment system to perform a portion of the slag cooling duty.

Exhibit VII.12-1 Estimated Process Makeup Water Requirements

PROCESS	FLOW RATE
AGR (Rectisol) System	270 lb/hr
Steam System	30,174 lb/hr
Circulating Water System	55,440 lb/hr
Slag Cooling	31,376 lb/hr
Total	117,260 lb/hr

This page intentionally left blank

VII.13 INSTRUMENTATION AND CONTROL SYSTEM DESCRIPTION

The instrumentation and control system consists of the equipment required to control the syngas production related processes in a safe and efficient manner. The plant systems will each be controlled by separate digital control systems (DCS) integrated with an overall plant DCS.

This page intentionally left blank

VII.14 ELECTRICAL SYSTEM DESCRIPTION

The electrical system consists of the equipment necessary to receive and distribute power to the electrically driven components in the syngas production plant and building support systems. It includes station service equipment, switchgear and motor control centers, conduit and cable trays, wire and cables, protective equipment (grounding, cathodic protection, etc.), and standby equipment. The anticipated total electrical power required for the syngas production plant is 5,140 kWe. A breakdown of electrical power requirements for major systems is shown in Exhibit VII.14-1.

Exhibit VII.14-1 Estimated Electric Power Requirements Summary

SYSTEM	KWE
Gasification	600
Material Handling	208
Circulating Water	154
Rectisol	3,568
Claus	180
PSA	5
Wastewater Treatment	300
Steam System	130
Total	5,145

This page intentionally left blank

VII.15 AIR SEPARATION UNIT DESCRIPTION

In this syngas production plant option, about 578 tons/day of 99.5% purity oxygen for the gasifier and Claus furnace, and 53 tons/day of nitrogen at about 517 psia will be purchased across-the-fence from a gas supplier. The type of ASU will be selected by the gas supplier based on the oxygen and nitrogen requirements, and availability requirement, of the syngas production plant. Utilities for the ASU will be the responsibility of the gas supplier. It is anticipated that these utilities will include about 9,700 kWe of electric power and about 3,200 gpm of circulating water for cooling.

This page intentionally left blank

VII.16 CAPITAL AND O&M COST ESTIMATES

This section describes the approach and results of evaluating the expected cost of the Syngas and H_2 Co-production Reference Plant.

VII.16.1 COST ESTIMATING APPROACH

The approach to capital cost development is a combination of WorleyParsons estimates of selected specific major systems to supplement the costs from an in-house BGL gasifier cost model that develops capital costs for an entire integrated gasification combined cycle (IGCC) plant. The format includes separate evaluation of major systems and sub-systems for the entire plant. These costs are determined with several levels of complexity depending on the specific system being estimated. The capital cost at the level of Total Field Cost includes equipment, materials, and installation labor.

The resulting capital cost is provided on an estimate form that recognizes each cost account for the plant. Since this evaluation is limited to the production of syngas and hydrogen, a number of the model cost accounts do not have an estimated value. Each account in the Reference Plant estimate contains separate costs for equipment, materials, and installation labor. These costs comprise the Total Field Cost (TFC), also referred to as the Bare Erected Cost (BEC). The Total Capital Cost consists of equipment and material costs, direct and indirect labor costs, engineering costs, other costs and contingencies for the total syngas project. The estimate does not include escalation, financing costs or any additional costs that would be the responsibility of the plant owner. The model helps assure that plant estimates are consistently evaluated and that all relevant process scope is included. When more than one case is evaluated, this approach produces costs that indicate normalized and unbiased results that reflect generic differences.

The cost of plant operating and maintenance is included for the Reference Plant. These costs were developed on an average

annual cost basis. This operating and maintenance cost estimate includes the following:

- Fuel cost
- Fixed Operating Cost
  - Operating labor
  - Maintenance labor and Material
  - Administrative and support labor
- Variable, non-fuel operating costs
  - Consumables
  - Waste disposal
- Other operating costs (By-Products)

VII.16.2 COST BASIS AND ASSUMPTIONS

VII.16.2.1 Capital Cost Basis and Assumptions

The following are the basis for the capital costs:

- Construction performed by Gulf Coast non-union labor.
- Coal will be delivered to the site by truck.
- A separate unloading facility is included for the limestone (flux) supply.
- Slag will be trucked to an unspecified off-site disposal area.
- Cost estimate scope is based on study performance summary, heat and material balance data, conceptual site arrangement, and system design descriptions presented in previous sections.
- Cost estimate is in constant June 2005 dollars.
- Estimate for coal and limestone handling systems is based on an in-house conceptual estimate of plant specific material handling scope. The cost does include vendor furnished budgetary costs for over 80% of the equipment cost.
- The estimate for the gas cleanup system and waste water treatment system were prepared by WorleyParsons. These systems include the Rectisol Section, Claus Section and Gas Liquor Treatment Section. These estimates were developed on the basis of engineering defined equipment lists that defined

each of the major components for each system. The costs were based on a US Gulf Coast basis.

- The PSA system cost was based on vendor budgetary cost estimates.
- The estimate for the gasifier system is based on the in-house BGL IGCC cost model utilized for previous IGCC evaluations, and includes the cost of a spare gasifier with feed lock, gas water wash vessel, slag quench vessel, and slag lock.
- Model costs are adjusted to the common June 2005 basis using Chemical Engineering Indices. Indices generally reflect the recent actual increases in steel price. However, the steel commodity prices are very volatile and significant changes occur on a monthly basis. Depending on the perceived long-term impact of these changes, special consideration of the impact is necessary.
- Construction of the project is based on the owner purchasing equipment, retaining the services of an engineering/design/construction manager firm and executing construction with multiple contracts.
- Construction cost is based on a 40 hour workweek with spot overtime.
- Equipment costs are based on use of United States equipment vendors.
- Contingency was evaluated with varying rates for each estimate line item depending on the risk for cost growth. The resulting contingency rate for each estimate is the weighted composite value.
- Estimate includes the following:
    - Syngas/H_2 production plant battery limits
    - All identified process equipment necessary for the production of syngas
    - Wet/Dry cooling tower and circulating water system
    - Auxiliary transformer, switchgear and MCC's to support the plant auxiliary power load
    - DCS system for plant control
    - Miscellaneous systems and equipment necessary to support the major process systems
    - Site development and buildings

- Professional services for the engineering & design of the syngas balance of plant.
- Professional services for construction management of the syngas plant.
- Professional services and craft labor in support of plant startup but not the costs of owner's plant startup.
- An allowance for startup spare parts but not the cost of initial spare part inventory.
- An allowance for Builders Risk and General Liability Insurance

♦ Estimates do not include the following:

- Capital cost for the air separation unit (the facility is considered to be off-site and the cost of oxygen and nitrogen are recognized in the annual O&M cost estimate and include the impact of utility costs).
- Sales tax
- Escalation
- Owners costs such as for licenses, permits, land, etc.

VII.16.2.2 Operating and Maintenance Cost Basis and Assumptions

Annual Operating and Maintenance (O&M) costs are based on and include the following:

♦ O&M estimate is the average annual cost.

♦ Evaluation Annual Plant Capacity factor is 95%.

♦ Cost of fuel is included.

♦ Average operator labor rate is $32.00

♦ Operator labor burden is 30% of base labor, and Overhead charge is 25% of all plant labor.

♦ Average annual maintenance material and labor

♦ Consumables costs are based on the expected full load consumption (resulting costs are adjusted for the stated plant capacity factor) and corresponding unit costs for the following:

- Water Makeup
- Water Treatment Chemicals

- Flux (limestone)
- Oxygen
- Methanol
- Natural Gas
- Nitrogen
- Waste Disposal
- Sulfur By-Product Credit

VII.16.2.3 Results

VII.16.2.3.1 Total Indicative Price

A summary of the capital cost estimates by major account is shown in Exhibit VII.16-1. The total capital cost of the syngas/H_2 production plant is estimated to be $124.6 million, about $5,440/MMBtu/day of the combined energy of the syngas and hydrogen products (total fuel product). The estimated capital cost does not include financing, escalation, or owner's costs, as noted in the capital cost basis and assumptions in VII.16.2.1.

VII.16.2.3.2 Annual Operating and Maintenance Costs

The estimated annual operating costs, excluding annualized capital costs, are summarized in Exhibit VII.16-2. The annual fixed operating costs are estimated to be about $6 million, or about $263/MMBtu/day of the combined energy of the syngas and hydrogen products (total fuel product). The annual non-fuel variable operating costs are estimated to total about $12.4 million, about $1.56/MMBtu of total fuel product based on a plant capacity factor of 95%. The annual fuel operating cost is estimated to be $13.1 million, or about $1.65/MMBtu of total fuel product. The total annual variable operating cost, including fuel cost, is thus estimated to be about $3.21/MMBtu of total fuel product. If the unit fixed annual operating cost is put on an annual total fuel production basis at 95% capacity factor, then the estimated total annual operating cost, fixed and variable, is about $3.97/MMBtu.

Exhibit VII.16-1 Summary of Capital Cost Estimate

INDICATIVE PRICING

CLIENT: DOE
PROJECT: Industrial Size Gasification
CASE: BGL 1000 Syngas w/ Tar Recycle, H2 & Spare-III#6

7/7/2006 Cost Base (Jun.) 2005

Prepared by: G. Hinds Checked by:L. L. Pinkerton

CODE	ITEM		EQUIPMENT	MATERIAL	LABOR	TOTAL	COMMENTS
							22,896 MMBtu/day
1.0	Coal & Sorbent Handling		$ 913,985	$ 111,057	$ 404,090	$ 1,429,132	Coal & Flux Receiving & Reclaim
2.0	Coal & Sorbent Prep & Feed		$ 1,628,788	$ 128,284	$ 600,765	$ 2,357,837	Coal & Flux Storage & Feed to Gasifier
3.0	Misc. BOP Systems		$ 731,374	$ 444,117	$ 444,398	$ 1,619,890	
4.0	Gasifier & Accessories		$ 18,132,336	$ 642,216	$ 11,367,299	$ 30,141,850	Gasifier, Gas Cooling, Slag Quench, Tar Separation
4.0	ASU Plant		$ -	$ -	$ -	$ -	Off-Site (see O&M)
5.0	Gas Cleanup		$ 23,384,029	$ 4,788,359	$ 10,656,850	$ 38,829,237	Rectisol, Claus & Gas Liquor Treating
5.0	CO2 Removal & Compression		$ -	$ -	$ -	$ -	
6.0	Combustion Turbine Plant		$ -	$ -	$ -	$ -	
7.0	HRSG, Ducting & Stack		$ -	$ -	$ -	$ -	
8.0	Steam Turbine Generator		$ -	$ 186,871	$ 113,187	$ 300,058	Steam Piping System
9.0	Cooling Water System		$ 928,242	$ 575,636	$ 479,993	$ 1,983,871	Cooling Tower Cooling & Component Cooling
10.0	Ash Handling System		$ 804,136	$ 294,871	$ 312,194	$ 1,411,202	Slag Conveyor & Truck Feed
11.0	Accessory Electric Plant		$ 2,189,662	$ 1,053,437	$ 2,019,357	$ 5,262,456	
12.0	Instrumentation & Control		$ 2,445,502	$ 276,391	$ 951,747	$ 3,673,640	
13.0	Improvements to Site		$ 217,145	$ 255,977	$ 568,091	$ 1,041,213	
14.0	Buildings & Structures		$ -	$ 983,697	$ 628,015	$ 1,611,712	
	TOTAL FIELD COST		$ 51,375,198	$ 9,740,912	$ 28,545,987	$ 89,662,097	
	PROFESSIONAL SERVICES:		$ 8,966,200	$ -	$ -	$ 8,966,200	Includes Engineering, Design & CM
	OTHER COSTS (LESS Escalation)		$ 4,600,000	$ -	$ 200,000	$ 4,800,000	Freight, Heavy Haul, Startup Spares & Insurances
	ESCALATION		$ -	$ -	$ -	$ -	Excluded
							$/MMBtu/day
	TOTAL (w/o CONTINGENCY)		$ 64,941,398	$ 9,740,912	$ 28,745,987	$ 103,428,297	4,520
	CONTINGENCY					$ 21,185,037	
							$/MMBtu/day
	TOTAL					$ 124,613,334	5,440

Exhibit VII.16-2 Estimated Annual O&M Costs

INITIAL & ANNUAL O&M EXPENSES

BGL 1000 Syngas w/ Tar Recycle, H2 & Spare-III#6				Cost Base (Jun.)	2005
Plant Output:	Syngas (MMBtu/hr)	770.4	Hydrogen (MMBtu/hr) 183.6	Heat Rate-net(Btu/kWh):	
				MWe-net:	0.0
				Capacity Factor: (%):	95

OPERATING & MAINTENANCE LABOR

Operating Labor		
Operating Labor Rate(base):	32.00	$/hour
Operating Labor Burden:	30.00	% of base
Labor O-H Charge Rate:	25.00	% of labor

Operating Labor Requirements(O.J.)per Shift:	1 unit/mod.	Total Plant
Skilled Operator	2.0	2.0
Operator	5.0	5.0
Foreman	1.0	1.0
Lab Tech's, etc.	1.0	1.0
TOTAL-O.J.'s	9.0	9.0

	Annual Cost $	Annual Unit Cost $/MMBtu
Annual Operating Labor Cost	$3,279,744	0.413
Maintenance Labor Cost	$1,531,724	0.193
Administrative & Support Labor	$1,202,867	0.152
TOTAL FIXED OPERATING COSTS	**$6,014,336**	**0.758**

VARIABLE OPERATING COSTS

	Annual Cost $	$/MMBtu
Maintenance Material Cost	$2,297,587	0.289

Consumables	Consumption Initial	Consumption /Day	Unit Cost	Initial Cost	Annual Cost $	$/MMBtu
Water(/1000 gallons)		380	0.43		$56,604	0.007
Chemicals						
MU & WT Chem.(lbs)	33,992	1,133	0.16	$5,293	$61,182	0.008
Carbon (Mercury Removal) (lb.)			6.50			
COS Catalyst (lb)			0.60			
Flux (limestone-ton)	879	29.3	20.00	$17,582	$203,223	0.026
O2 (ton)		576.6	34.50		$6,898,224	0.869
Methanol (ton)	12	0.4	282.00	$3,384	$39,113	0.005
Subtotal Chemicals				$26,260	$7,201,743	0.907
Other						
Supplemental Fuel(mmBtu)		75.4	7.00		$183,060	0.023
Gases,N2 (ton)	1,587	52.9	17.00		$311,879	0.039
Auxiliary Power (MW/hr)		123.3	40.00		$1,710,337	0.215
Subtotal Other					$2,205,277	0.278
Subtotal-Other						
Waste Disposal						
Spent Mercury Catalyst (lb.)			0.25			
Flyash (ton)						
Bottom Ash/Slag (ton)		165.4	16.00		$917,883	0.116
Subtotal-Waste Disposal					$917,883	0.116
By-products & Emissions						
Sulfur(tons)		36.1	25.00		($312,699)	-0.039
Subtotal By-Products					($312,699)	-0.039
TOTAL VARIABLE OPERATING COSTS					**$12,366,395**	**1.558**
Fuel(ton)	34,347	1,145	33.00	$1,133,458	**$13,100,886**	**1.650**

This page intentionally left blank

VII.17 CONCLUSION

A conceptual design and cost estimate of a reference syngas/hydrogen production plant using a single operating BGL 1000 Gasifier were developed. The syngas cleanup system consists of a Rectisol process for removal of sulfur and other contaminants from the syngas and a Claus process for converting H_2S in the syngas to elemental sulfur. A Pressure Swing Adsorption (PSA) system is used for production of hydrogen from the syngas. The estimated performance characteristics of the plant are as follows:

- Coal Consumption: 95,409 lb/hr
- Coal Thermal Input (HHV): 1,118 MMBtu/hr
- Limestone Consumption: 2,442 lb/hr
- Oxygen Consumption: 48,173 lb/hr
- Nitrogen Consumption: 4,409 lb/hr
- Net Electric Power Consumption: 5,145 kWe
- Exported Syngas Product: 132,037 lb/hr (2.26 million scf/hr)
  769 MMBtu/hr
- Syngas Higher Heating Value: 5,830 Btu/lb (360 Btu/scf)
- Syngas Lower Heating Value: 5,595 Btu/lb (345 Btu/scf)
- Hydrogen Product: 3,019 lb/hr (184 MMBtu/hr)
- Elemental Sulfur Co-product: 3,000 lb/hr
- Gasification System Cold Gas Efficiency: 89.3%
- Net Syngas/Hydrogen Production Plant Thermal Efficiency: 74.7%
- Slag Production: 13,787 lb/hr

The study was based on purchase of oxygen and nitrogen from a gas supplier who owns and operates an ASU on-site. The gas supplier is responsible for utilities for the ASU. For the capacity

required for the syngas production plant, the electric power consumption of the ASU is estimated by a supplier to be about 9,700 kWe.

The capital cost of the Syngas and H_2 Co-Production Reference Plant is estimated to total about $124.6 million, in June 2005 dollars, about $5,440/MMBtu/day of the combined energy of the syngas and hydrogen products (total fuel product), including professional services and contingency, but not including owner's costs. The annual fixed O&M cost is estimated to be about $6 million ($263/MMBtu/day of total fuel product). The annual variable O&M cost is estimated to total about $25.5 million (about $3.21/MMBtu of syngas product), with the non-fuel variable O&M cost portion being about $12.4 million, or $1.56/MMBtu of total fuel product, and the fuel cost portion being about $13.1 million, or about $1.65/MMBtu or total fuel product.

VII.18 MAJOR EQUIPMENT LIST

VII.18.1 GASIFIER PROCESS PACKAGE

Coal / Limestone Feed Lock
Quantity 2
Carbon Steel
Nominal vessel diameter: 8 ft.
Nominal vessel height: 16 ft.
Nominal pressure: 500 psia

Gasifier
Quantity 2
Carbon Steel, Jacketed Shell
Nominal shell diameter: 14 ft.
Nominal height: 44 ft.
Nominal pressure: 500 psia
Refractory
Oxygen/Steam Injector
Tar/oil injector

Slag Quench Vessel
Quantity 2
Carbon Steel Vessel
Nominal vessel diameter: 12 ft.
Nominal vessel height: 17 ft.
Nominal pressure: 500 psia

Slag Lock
Quantity 2
Carbon Steel Vessel
Nominal vessel diameter: 9 ft.
Nominal vessel height: 14 ft.
Nominal pressure: 500 psia

Wash Cooler
Quantity 2
Nominal diameter: 6 ft.
Nominal height: 20 ft.

Waste Heat Exchanger (Primary HX)
Quantity 1
Nominal pressure: 500 psia
Temperature: 300°F – 400°F
Outlet steam pressure: 75 psia
Outlet steam temperature: 308°F
Duty: 0.17 MMBtu/hr

Syngas Cooling System
Quantity 1
Shell and tube (gas tubeside)
Nominal pressure: 340 psia
Temperature: 95°F – 315°F
- Syngas Cooler 1
- Syngas Cooler 2
- Syngas Cooler 3

Liquor Separation and Tar Recycle System
Quantity 1
- Liquor Coolers
- Tar Separator
- Condensate Separator
- Liquid Products Tank

VII.18.2 WASTE WATER TREATMENT SYSTEM

Towers

Solvent Extraction Column

Type	Agitated column
Quantity	1
Diameter	2 ft, 6 inch
Height	30 ft
Number of Trays	20
Pressure	30 psia
Temperature	150 F
Materials of Construction	316 Stainless

Solvent Recovery Column

Type	Packed column
Quantity	1
Diameter	2 ft, 4 inch
Height	30 ft
Number of Trays	15
Pressure	30 psia
Temperature	500 F
Materials of Construction	316 Stainless

Sour Gas Scrubber

Type	Packed column
Quantity	1
Diameter	2 ft
Height	30 ft
Number of Trays	15
Pressure	50 psia
Temperature	300 F
Materials of Construction	316 Stainless

Process Reactors

Biological Reactor

Type	Vertical
Quantity	1
Diameter	16 ft
Height	20 ft
Pressure	15 psia
Temperature	100 F
Materials of Construction	Rubber-lined carbon steel

Tanks

Clean Solvent Storage Tank

Type	Horizontal
Quantity	1
Diameter	3 ft
Length	9 ft
Pressure	20 psia
Temperature	200 F
Materials of Construction	Carbon Steel

Caustic Storage Drum

Type	Horizontal
Quantity	1
Diameter	4 ft
Length	12 ft
Pressure	20 psia
Temperature	100 F
Materials of Construction	Carbon Steel

Heat Exchangers

Solvent Column Reboiler

Type	Shell and tube
Quantity	1
Fluid (Hot/Cold)	MP Steam / Column Bottoms
Duty	0.42 MMBtu/hr
Area	63 ft2
Pressure	30 psia
Temperature	500 F
Materials of Construction	Carbon Steel

Solvent Column Condenser

Type	Shell and Tube
Quantity	1
Fluid (Hot/Cold)	Column Overheads / Cooling Water
Duty	0.27 MMBtu/hr
Area	42 ft2
Pressure	30 psia
Temperature	400 F
Materials of Construction	316 Stainless

Sour Gas Column Reboiler

Type	Shell and Tube
Quantity	1
Fluid (Hot/Cold)	LP Steam / Column Bottoms
Duty	0.312 MMBtu/hr
Area	120 ft2
Pressure	50 psia
Temperature	400 F
Materials of Construction	Carbon Steel

Sour Gas Column Condenser

Type	Shell and Tube
Quantity	1
Fluid (Hot/Cold)	Column Overheads / Cooling Water
Duty	0.1 MMBtu/hr
Area	17 ft2
Pressure	50 psia
Temperature	300 F
Materials of Construction	316 Stainless

Compressors

Air Compressor

Type	Centrifugal
Quantity	1
Fluid	Air
Work	70 hp
Pressure Rise	5 psi
Outlet Pressure	20 psia
Temperature	200 F
Materials of Construction	Carbon Steel

Miscellaneous

Water Clarifier

Quantity	1 operating
Fluid	10% TSS Water @ 30 gpm
Temperature	100 F

VII.18.3 RECTISOL SYSTEM

Towers

Rectisol Absorber

Type	Tray column
Quantity	1
Diameter	7 ft
Height	100 ft
Number of Trays	50
Pressure	330 psia
Temperature	-60 to 10 F
Materials of Construction	316 Stainless

Flash Regenerator

Type	Tray column
Quantity	1
Diameter	3 ft
Height	38 ft
Number of Trays	17
Pressure	330 psia
Temperature	-35 to 50 F
Materials of Construction	316 Internals, Carbon Steel

Hot Regenerator

Type	Tray column
Quantity	1
Diameter	4 ft
Height	30 ft
Number of Ideal Stages	15
Pressure	50 psia
Temperature	100-500 F
Materials of Construction	316 Stainless

Methanol Stripper

Type	Packed column
Quantity	1
Diameter	3 ft, 6 inches
Height	25 ft
Number of Ideal Stages	20
Pressure	80 psia
Temperature	300 F
Materials of Construction	Carbon steel shell
Packing Material	1 inch ceramic Raschig rings

Package Units

Refrigeration System

Refrigerant	Propylene
Quantity	1
Duty	7 MMBtu/hr (580 ton)

Tanks

Pre-wash Flash Tank

Type	Vertical
Quantity	1
Diameter	1 ft, 6 inch
Total Vessel Height	5 ft
Liquid Level Height	2 ft
Pressure	50 psia
Temperature	100 F
Materials of Construction	Carbon Steel

BTX Overflow Decanter

Type	Horizontal, Skimmer Weir
Quantity	1
Height	2 ft
Length	4 ft
Width	2 ft
Pressure	20 psia
Temperature	50 F
Materials of Construction	Carbon Steel

Heat Exchangers

Feed Gas Cooler

Type	Shell and Tube
Quantity	1
Fluid (Hot/Cold)	Raw Syngas / Treated Syngas
Duty	5.2 MMBtu/hr
Area	16,827 ft2
Pressure	400 psia
Temperature	-20 to 100 F
Materials of Construction	Carbon Steel

Treated Gas Exchanger

Type	Shell and Tube
Quantity	1
Fluid (Hot/Cold)	Absorber Bottoms / Treated Syngas
Duty	2.6 MMBtu/hr
Area	9,869 ft2
Pressure	400 psia
Temperature	-60 to 0 F
Materials of Construction	316 Stainless

Inter-stage Wash Cooler

Type	Shell and Tube
Quantity	1
Fluid (Hot/Cold)	Methanol / Propylene
Duty	4.3 MMBtu/hr
Area	3,222 ft2
Pressure	400 psia
Temperature	-60 F
Materials of Construction	316 Stainless

Lean Methanol Cooler

Type	Shell and Tube
Quantity	1
Fluid (Hot/Cold)	Methanol / Propylene
Duty	17.5 MMBtu/hr
Area	4,680 ft2
Pressure	400 psia
Temperature	-60 F
Materials of Construction	316 Stainless

Heat Exchangers (continued)

Hot Regenerator Overheads Condenser

Type	Shell and Tube
Quantity	1
Fluid (Hot/Cold)	Overheads / Cooling Water
Duty	0.9 MMBtu/hr
Area	436 ft2
Pressure	100 psia
Temperature	100 F
Materials of Construction	316 Stainless

Hot Regenerator Reboiler

Type	Shell and Tube
Quantity	1
Fluid (Hot/Cold)	LP Steam / Hot Regenerator Bottoms
Duty	5.3 MMBtu/hr
Area	785 ft2
Pressure	200 psia
Temperature	300 F
Materials of Construction	Carbon Steel

Methanol Stripper Feed Heater

Type	Shell and Tube
Quantity	1
Fluid (Hot/Cold)	LP Steam / Column Feed
Duty	0.12 MMBtu/hr
Area	20 ft2
Pressure	100 psia
Temperature	200 F
Materials of Construction	Carbon Steel

Methanol Stripper Overheads Condenser

Type	Shell and Tube
Quantity	1
Fluid (Hot/Cold)	Overheads / Cooling Water
Duty	2.7 MMBtu/hr
Area	224 ft2
Pressure	100 psia
Temperature	200 F
Materials of Construction	Carbon Steel

Heat Exchangers (continued)

Methanol Stripper Reboiler

Type	Shell and Tube
Quantity	1
Fluid (Hot/Cold)	LP Steam / Column Bottoms
Duty	2.9 MMBtu/hr
Area	753 ft2
Pressure	100 psia
Temperature	300 F
Materials of Construction	Carbon Steel
Temperature	300 F
Materials of Construction	316 SS

Compressors

Flash Regenerator Compressor

Type	Centrifugal
Quantity	1
Fluid	Syngas
Work	600 hp
Pressure Rise	280 psi
Outlet Pressure	300 psia
Temperature	500 F
Materials of Construction	Carbon Steel

Pumps

Lean Methanol Pump

Type	Centrifugal
Quantity	1 operating / 1 spare
Fluid	Methanol @ 800 gpm
Work	200 hp
Pressure Rise	200 psi
Outlet Pressure	350 psia
Temperature	300 F
Materials of Construction	316 clad on Carbon Steel

Rich Methanol Pump

Type	Centrifugal
Quantity	1 operating / 1 spare
Fluid	Methanol @ 800 gpm
Work	100 hp
Pressure Rise	100 psi
Outlet Pressure	250 psia
Temperature	100 F
Materials of Construction	316 clad on Carbon Steel

Hot Regenerator Bottoms Pump

Type	Centrifugal
Quantity	1 operating / 1 spare
Fluid	Methanol @ 50 gpm
Work	30 hp
Pressure Rise	23 psi
Outlet Pressure	50 psia
Temperature	120 F
Materials of Construction	Carbon Steel

BTX Bottoms Pump

Type	Centrifugal
Quantity	1 operating / 1 spare
Fluid	Methanol @ 10 gpm
Work	20 hp
Pressure Rise	30 psi
Outlet Pressure	80 psia
Temperature	100 F
Materials of Construction	Carbon Steel

Pumps (continued)

Methanol Stripper Pump

Type	Centrifugal
Quantity	1 operating / 1 spare
Fluid	Methanol @ 30 gpm
Work	10 hp
Pressure Rise	5 psi
Outlet Pressure	40 psia
Temperature	150 F
Materials of Construction	Carbon Steel

Methanol Stripper Bottoms Pump

Type	Centrifugal
Quantity	1 operating / 1 spare
Fluid	Methanol @ 30 gpm
Work	10 hp
Pressure Rise	5 psi
Outlet Pressure	40 psia
Temperature	150 F
Materials of Construction	Carbon Steel

VII.18.4 CLAUS SYSTEM

Towers

Water Wash Tower

Type	Tray column
Quantity	1
Diameter	5 ft
Height	40 ft
Number of Trays	15
Pressure	30 psia
Temperature	150 F
Materials of Construction	316 Stainless

Process Reactors

Claus Furnace

Type	Horizontal
Quantity	1
Diameter	5 ft
Height	15 ft
Pressure	50 psia
Temperature	2,500 F
Catalyst Volume	N/A
Catalyst Life	None
Materials of Construction	Refractory-lined carbon steel

Claus Sulfur Converter No. 1

Type	Fixed-bed
Quantity	1
Diameter	5 ft
Height	14 ft
Pressure	30 psia
Temperature	600 F
Catalyst Volume	200 ft3
Catalyst Life	1 year
Materials of Construction	Carbon Steel

Claus Sulfur Converter No. 2

Type	Fixed-bed
Quantity	1
Diameter	5 ft
Height	14 ft
Pressure	30 psia
Temperature	600 F
Catalyst Volume	200 ft3
Catalyst Life	1 year
Materials of Construction	Carbon Steel

Hydrogenation Reactor

Type	Fixed-bed
Quantity	1
Diameter	4 ft, 6 inch
Height	14 ft
Pressure	30 psia
Temperature	600 F
Catalyst Volume	160 ft3
Catalyst Life	1 year
Materials of Construction	Carbon Steel

Tanks

Medium Pressure Steam Drum

Type	Horizontal
Quantity	1
Diameter	8 ft
Length	24 ft
Pressure	700 psia
Temperature	500 F
Materials of Construction	Carbon Steel

Low Pressure Steam Drum

Type	Horizontal
Quantity	1
Diameter	4 ft
Length	12 ft
Pressure	120 psia
Temperature	500 F
Materials of Construction	Carbon Steel

Sulfur Storage Pit

Type	In-ground pit
Quantity	1
Height	10 ft
Length	12 ft
Width	7 ft
Pressure	15 psia
Temperature	300 F
Materials of Construction	Concrete, epoxy lined

Sulfur Storage Tank

Type	Vertical
Quantity	1
Diameter	40 ft
Height	42 ft
Pressure	20 psia
Temperature	500 F
Materials of Construction	Carbon Steel, epoxy lined

Heat Exchangers

Waste Heat Boiler

Type	Fired Tube
Quantity	1
Fluid (Hot/Cold)	Claus gas / MP Steam
Duty	6.03 MMBtu/hr
Area	451 ft2
Pressure	600 psia
Temperature	1,600 F
Materials of Construction	Stainless Steel

Acid Gas Heater

Type	Shell and Tube
Quantity	1
Fluid (Hot/Cold)	MP Steam / Acid Gas
Duty	1.16 MMBtu/hr
Area	352 ft2
Pressure	600 psia
Temperature	600 F
Materials of Construction	316 Stainless

Oxidant Heater

Type	Shell and Tube
Quantity	1
Fluid (Hot/Cold)	MP Steam / Air
Duty	0.312 MMBtu/hr
Area	128 ft2
Pressure	600 psia
Temperature	600 F
Materials of Construction	Carbon Steel

Sour Gas Heater

Type	Shell and Tube
Quantity	1
Fluid (Hot/Cold)	MP Steam / Sour Gas
Duty	0.1 MMBtu/hr
Area	30 ft2
Pressure	600 psia
Temperature	600 F
Materials of Construction	316 Stainless

Heat Exchangers (continued)

Claus Reactor No. 1 Preheater

Type	Shell and Tube
Quantity	1
Fluid (Hot/Cold)	MP Steam / Claus Gas
Duty	0.711 MMBtu/hr
Area	448 ft2
Pressure	600 psia
Temperature	600 F
Materials of Construction	Carbon Steel

Claus Reactor No. 2 Preheater

Type	Shell and Tube
Quantity	1
Fluid (Hot/Cold)	MP Steam / Claus Gas
Duty	0.42 MMBtu/hr
Area	161 ft2
Pressure	600 psia
Temperature	600 F
Materials of Construction	Carbon Steel

Hydrogenation Reactor Preheater

Type	Shell and Tube
Quantity	1
Fluid (Hot/Cold)	MP Steam / Claus Tail Gas
Duty	1.3 MMBtu/hr
Area	590 ft2
Pressure	600 psia
Temperature	600 F
Materials of Construction	Carbon Steel

Hydrogenation Reactor Cooler

Type	Shell and Tube
Quantity	1
Fluid (Hot/Cold)	Claus Tail Gas / LP Steam
Duty	1.1 MMBtu/hr
Area	386 ft2
Pressure	100 psia
Temperature	400 F
Materials of Construction	Carbon Steel

Heat Exchangers (continued)

Sulfur Condenser No. 1

Type	Shell and Tube
Quantity	1
Fluid (Hot/Cold)	Claus Gas-Sulfur / LP Steam
Duty	1.71 MMBtu/hr
Area	453 ft2
Pressure	100 psia
Temperature	400 F
Materials of Construction	316

Sulfur Condenser No. 2

Type	Shell and Tube
Quantity	1
Fluid (Hot/Cold)	Claus Gas-Sulfur / LP Steam
Duty	1.44 MMBtu/hr
Area	627 ft2
Pressure	100 psia
Temperature	400 F
Materials of Construction	316

Sulfur Condenser No. 3

Type	Shell and Tube
Quantity	1
Fluid (Hot/Cold)	Claus Gas-Sulfur / LP Steam
Duty	0.77 MMBtu/hr
Area	453 ft2
Pressure	100 psia
Temperature	400 F
Materials of Construction	316

Sulfur Storage Heater

Type	Bayonet
Quantity	1
Fluid (Hot/Cold)	MP Steam / Molten Sulfur
Duty	10 MMBtu/hr
Area	500 ft2
Pressure	600 psia
Temperature	400 F
Materials of Construction	316

Compressors

Air Compressor

Type	Centrifugal
Quantity	1
Fluid	Air
Work	130 hp
Pressure Rise	20 psi
Outlet Pressure	35 psia
Temperature	300 F
Materials of Construction	Carbon Steel

Pumps

Medium Pressure BFW Pump

Type	Centrifugal
Quantity	1 operating / 1 spare
Fluid	Water @ 150 gpm
Work	100 hp
Pressure Rise	30 psi
Outlet Pressure	700 psia
Temperature	600 F
Materials of Construction	Carbon Steel

Low Pressure BFW Pump

Type	Centrifugal
Quantity	1 operating / 1 spare
Fluid	Water @ 100 gpm
Work	50 hp
Pressure Rise	30 psi
Outlet Pressure	100 psia
Temperature	400 F
Materials of Construction	Carbon Steel

Wash Water Tower Pump

Type	Centrifugal
Quantity	1 operating / 1 spare
Fluid	Water @ 500 gpm
Work	30 hp
Pressure Rise	10 psi
Outlet Pressure	30 psia
Temperature	120 F
Materials of Construction	Carbon Steel

Sulfur Pump

Type	Centrifugal
Quantity	1 operating / 1 spare
Fluid	Molten Sulfur @ 50 gpm
Work	20 hp
Pressure Rise	5 psi
Outlet Pressure	20 psia
Temperature	400 F
Materials of Construction	316 Stainless Steel

Skids

Molten Sulfur Truck Loading Skid

Quantity	1 operating
Fluid	Molten Sulfur @ 200 gpm
Temperature	300 F

VII.18.5 HYDROGEN PRODUCTION SYSTEM

UOP PolyBed™ PSA Unit – 1 Unit

VII.18.6 STEAM SYSTEM

Syngas-fired boiler: 46 MMBtu/hr
Deaerator
Flash Tank
Low Pressure Steam Header
Medium Pressure Steam Header

VII.18.7 CIRCULATING WATER SYSTEM

Plume-abated mechanical draft cooling tower
- Cooling Duty: 67 MMBtu/hr
- Circulating water flow rate: 7,435 gpm

Pumps

VII.18.8 COAL AND LIMESTONE RECEIVING AND HANDLING SYSTEMS

Item No.	Equipment	Quantity	Flow Rate TPH	Specs	weight	Comments
	Coal handling system					
1	Truck Scale	1		200,000 lb, 80'x11', 8 load cells	33,800Lb	
2	Coal Reclaim Feeder	1	250	40'-0" lg		
3	Vib. Screen	1	250	8' wx16 lg		
4	Coal Silos Loading HAC	1	250			
5	Coal Scale	1	250			
6	Magnetic Separator	1	250	42" w x 66" lg x 30" h		with rectifier
7	Overs Conveyor (Optional)					
8	Reversible Belt Conveyor	1	250			
9	Coal Silo A	1		430T, 32' dia. X 70' high		
10	Coal Silo B	1		430T, 32' dia. X 70' high		
11	Coal Maint Gates A	1		24" sq. manual		
12	Coal Maint Gates B	1		24" sq. manual		
13	Coal Diverter Gate A	1		24" sq. Pneumatic		
14	Coal Diverter Gate B	1		24" sq. Pneumatic		
15	Coal Silo discharge feeder A	1		24"x 44'-0"		
16	Coal Silo discharge feeder B	1	50	24"X 48'-0"		
	Limestone handling system					
17	Loading Hopper	1		1000 lbs 5'sq.x3' high		
18	Limestone Reclaim Feeder	1	10	12" dia. X 10'-0"		
19	Limestone Silos Loading HAC	1	10			
20	Limestone Scale	1				
21	limestone Silo	1		22T, 12' dia. X 28'		
22	Limestone Maint Gate	1		24" sq. manual		
23	Limestone Diverter Gate	1		24" sq. Pneumatic		
24	Limestone Silo discharge feeder A	1		12" x 12'-0"		
25	Limestone Silo discharge feeder B	1		12" x 18'-0"		
	Coal/Limestone					
26	Gasifier Feed HAC A	1				
27	Gasifier Feed HAC B	1				
28	Weigh Hopper	1		50T, 12' dia. 18'		
29	Weigh Hopper Load Cells	4				Add 4 Load cells
30	Loss weigh Hopper	1		7T, 6' dia. X 10'		

Industrial Size Gasification for Syngas, Substitute Natural Gas and Power Production

Section VIII - Case 2A Conceptual Design Description
SNG Production Reference Plant – Illinois #6 Coal

DOE/NETL-401 / 040607

FR-53769211

April 2007

Disclaimer

This report was prepared as an account of work sponsored by an agency of the United States Government. Neither the United States Government nor any agency thereof, nor any of their employees, makes any warranty, express or implied, or assumes any legal liability or responsibility for the accuracy, completeness, or usefulness of any information, apparatus, product, or process disclosed, or represents that its use would not infringe privately owned rights. Reference therein to any specific commercial product, process, or service by trade name, trademark, manufacturer, or otherwise does not necessarily constitute or imply its endorsement, recommendation, or favoring by the United States Government or any agency thereof. The views and opinions of authors expressed therein do not necessarily state or reflect those of the United States Government or any agency thereof.

Industrial Size Gasification for Syngas, Substitute Natural Gas and Power Production

Section VIII - Case 2A Conceptual Design Description
SNG Production Reference Plant – Illinois #6 Coal

DOE/NETL-401 / 040607

FR-53769211

April 2007

NETL Contact: DE-AC26-04NT41817.401.01.05.002

Office of Systems Analysis and Planning Support

Prepared by:

Leonard M. Bartone, Jr., P.E.
Jay White
WorleyParsons Group Inc.

Research and Development Solutions, LLC.

National Energy Technology Laboratory
www.netl.doe.gov

This page is intentionally left blank

SECTION VIII TABLE OF CONTENTS

Section VIII Table of Contents ..... *VIII-i*

Section VIII List of Exhibits ..... *VIII-iii*

Terminology ..... *VIII-v*

Acknowledgements ..... *VIII-vii*

VIII.1 Summary *VIII-1*

VIII.2 System Description and Performance *VIII-5*

VIII.2.1 System Description **VIII-5**

VIII.2.2 Heat & Material Balance, Performance Estimates, and Emissions Estimates **VIII-8**

VIII.3 Plot Plan and Site Layout *VIII-51*

VIII.4 Solids Handling Systems Descriptions *VIII-55*

VIII.4.1 Coal Receiving, Storage, and Handling **VIII-55**

VIII.4.1.1 Coal Receiving and Storage VIII-55

VIII.4.1.2 Coal Handling and Preparation System VIII-55

VIII.4.2 Limestone Receiving, Storage, and Handling **VIII-56**

VIII.4.2.1 Limestone Receiving and Storage VIII-56

VIII.4.2.2 Limestone Handling and Preparation System VIII-57

VIII.4.3 Coal/Limestone Gasifier Delivery System **VIII-57**

VIII.4.4 Slag Handling **VIII-64**

VIII.5 Gasifier Process Package Description *VIII-65*

VIII.5.1 Gasifier **VIII-65**

VIII.5.2 Coal/Limestone Feed System **VIII-67**

VIII.5.3 Slag Removal System **VIII-68**

VIII.5.4 Syngas Wash Cooler **VIII-68**

VIII.5.5 Waste Heat Exchanger (Primary Heat Exchanger) **VIII-69**

VIII.5.6 Syngas Cooling System **VIII-69**

VIII.5.7 Gas Liquor Separation and Tar/Oil Reinjection System **VIII-69**

VIII.6 Water-Gas Shift Reaction System VIII-71
VIII.7 Syngas Cleanup System Description VIII-73
VIII.7.1 Rectisol Process Description VIII-73
VIII.7.2 Claus Process Description VIII-75
VIII.8 Methanation System VIII-77
VIII.9 Waste Water Treatment System Description VIII-79
VIII.10 Process Steam System Description VIII-81
VIII.10.1 Steam Subsystem VIII-81
VIII.10.2 Syngas-fired Boiler Subsystem VIII-81
VIII.11 Flare System Description VIII-83
VIII.12 Circulating Water System Description VIII-85
VIII.13 Process Water Supply System VIII-87
VIII.14 Instrumentation and Control System Description VIII-89
VIII.15 Electrical System Description VIII-91
VIII.16 Air Separation Unit Description VIII-93
VIII.17 Capital and O&M Cost Estimates VIII-95
VIII.17.1 Cost Estimating Approach VIII-95
VIII.17.2 Cost Basis and Assumptions VIII-96
VIII.17.2.1 Capital Cost Basis and Assumptions VIII-96
VIII.17.2.2 Operating and Maintenance Cost Basis and Assumptions VIII-98
VIII.17.2.3 Results VIII-99
VIII.18 Conclusion VIII-103
VIII.19 Major Equipment List VIII-105
VIII.19.1 Gasifier Process Package VIII-105
VIII.19.2 Waste Water Treatment System VIII-107
VIII.19.3 Rectisol System VIII-111
VIII.19.4 Claus System VIII-118
VIII.19.5 Water-Gas Shift System VIII-127
VIII.19.6 Methanation System VIII-133
VIII.19.7 Steam System VIII-140
VIII.19.8 Circulating Water System VIII-142
VIII.19.9 Coal and Limestone Receiving and Handling Systems VIII-143

SECTION VIII LIST OF EXHIBITS

Exhibit VIII.2-1 Sketch of the Major Systems Comprising the SNG Production Reference Plant VIII-7

Exhibit VIII.2-2 SNG Production Reference Plant Estimated Performance Summary VIII-10

Exhibit VIII.2-3 Gasification and Gas Cooling Conceptual Process Flow Diagram VIII-11

Exhibit VIII.2-4 Rectisol System Conceptual Process Flow Diagram VIII-13

Exhibit VIII.2-5 Sulfur Production (Claus) System Conceptual Process Flow Diagram VIII-15

Exhibit VIII.2-6 Waste Water Treatment System Conceptual Process Flow Diagram VIII-17

Exhibit VIII.2-7 Steam System Conceptual Process Flow Diagram VIII-19

Exhibit VIII.2-8 Syngas-fired Boiler Conceptual Process Flow Diagram VIII-21

Exhibit VIII.2-9 Water-Gas Shift Reaction System Conceptual Process Flow Diagram VIII-23

Exhibit VIII.2-10 Methanation System Conceptual Process Flow Diagram VIII-25

Exhibit VIII.2-11 Gasification and Gas Cooling Systems Estimated State Point Conditions and Compositions VIII-27

Exhibit VIII.2-12 Rectisol System Estimated State Point Compositions and Conditions VIII-31

Exhibit VIII.2-13 Sulfur Production (Claus) System Estimated State Point Compositions and Conditions VIII-35

Exhibit VIII.2-14 Waste Water Treatment System Estimated State Point Compositions and Conditions VIII-37

Exhibit VIII.2-15 Steam System Estimated State Point Compositions and Conditions VIII-39

Exhibit VIII.2-16 Fired Boiler System Estimated State Point Compositions and Conditions VIII-41

Exhibit VIII.2-17 Water-Gas Shift Reaction System Estimated State Point Compositions and Conditions VIII-43

Exhibit VIII.2-18 Methanation System Estimated State Point Compositions and Conditions VIII-47

Exhibit VIII.3-1 Conceptual General Equipment Arrangement and Plot Plan of SNG Production Reference Plant VIII-52

Exhibit VIII.3-2 Conceptual Elevation of Gasification Process Installation VIII-53

Exhibit VIII.4-1 Simplified Process Flow Diagram of Coal and Limestone Receiving, Storage, and Handling System VIII-59

Exhibit VIII.4-2 Coal and Limestone Storage and Handling Systems General Arrangement VIII-60

Exhibit VIII.4-3 Example of Snake Sandwich High Angle Conveyor by Dos Santos International for Feeding Coal Silos VIII-61

Exhibit VIII.4-4 Example of Snake Sandwich High Angle Conveyor by Dos Santos International for Feeding Limestone Silo VIII-62

Exhibit VIII.4-5 Example of Snake Sandwich High Angle Conveyor by Dos Santos International for Feeding Coal/Limestone to Gasifier Hopper VIII-63

Exhibit VIII.5-1 Schematic of Gasifier VIII-66

Exhibit VIII.12-1 Estimated Circulated Cooling Water Requirements VIII-85

Exhibit VIII.13-1 Estimated Process Makeup Water Requirements VIII-87

Exhibit VIII.15-1 Estimated Electric Power Requirements Summary VIII-91

Exhibit VIII.17-1 Summary of Capital Cost Estimate VIII-100

Exhibit VIII.17-2 Estimated Annual O&M Costs VIII-101

TERMINOLOGY

ASU ..... Air separation unit
BEC ..... Bare erected cost
BGL ..... British Gas Lurgi
BTX ..... Benzene, Toluene, and Xylene
Btu ..... British thermal unit
ºC ..... Degrees Celsius
CC ..... Combined cycle
CO_2 ..... Carbon dioxide
CT, GT ..... Combustion turbine, synonym for gas turbine
DME ..... Dimethyl ether
DOE ..... Department of Energy (United States)
DRD ..... Design Requirements Document
EIA ..... Energy Information Administration
EPA ..... Environmental Protection Agency
°F ..... degrees Fahrenheit
FOF ..... Forced outage factor
FOR ..... Forced outage rate
fps ..... Feet per second
GE ..... General Electric
GT, CT ..... Gas turbine, synonym for combustion turbine
GWh ..... Gigawatt-hour
Hg ..... Mercury
HHV ..... Higher Heating Value
HRSG ..... Heat recovery steam generator
ID ..... Induced Draft (fan)
IDC ..... Interest during construction
IGCC ..... Integrated Gasification Combined Cycle
kW, kWe ..... Kilowatt electric
kWt ..... Kilowatt thermal
KWh ..... Kilowatt-hour
LHV ..... Lower heaving value
MDEA ..... Methyl diethanol amine
MIBK ..... Methyl Isobutyl Ketone
MW, MWe ..... Megawatt electrical
MW_t ..... Megawatt thermal
MWh ..... Megawatt-hour
NETL ..... DOE National Energy Technology Laboratory
NOx ..... Nitrous oxides
O_2 ..... Oxygen
O&M ..... Operating and Maintenance
P&W ..... Pratt & Whitney
Part. ..... Particulate emissions
POX ..... Partial Oxidation
psia ..... Pound/square inch (14.696 psi = 1 atm)
Q ..... Heat
QGESS ..... DOE/NETL Quality Guidelines for Energy System Studies
S ..... Sulfur content of fuel
scf ..... Standard cubic feet (based on 14.7psia/60°F)
SNCR ..... Selective non-catalytic reduction (for NOx control)
SNG ..... Substitute (Synthetic) Natural Gas
SO_2 ..... Sulfur dioxide
ST ..... Steam turbine
Syngas ..... Synthetic gas
T&D ..... Transmission and distribution (electrical)
t ..... Short ton (2,000 lbs)

TG .....Turbo-generator, (turbine-generator)
t/h .....Ton/hour
ton.....short ton, (2000 lbs)
t/h,tph .....Ton per hour
t/y,tpy.....Ton per year
TPC .....Total plant cost
US, U.S. .....United States
USEPA United States Environmental Protection Agency
USD, US$ ..... The United States Dollar
USDOE ..... United States Department of Energy
y, yr..... Year

ACKNOWLEDGEMENTS

This work was performed under DOE/NETL Contract No. DE-AM26-04NT41817 with Research and Development Solutions (RDS), LLC. WorleyParsons Group Inc. performed the work under a subcontract agreement with RDS, Subcontract No. 41817M2943.

The NETL Project Manager for this activity was Jeffrey Hoffmann.

The authors acknowledge the contributions of Victor Shellhorse and Bill Jones of Allied Syngas Corporation who were of considerable assistance in describing the characteristics of the British Gas Lurgi gasifier.

This page intentionally left blank

VIII.1 SUMMARY

A feasibility study was performed to evaluate the technical and economic viability of coal-derived syngas and substitute natural gas (SNG) refueling of U.S. industries. The study includes the development of Reference Plant Conceptual Designs for the following application scenarios:

Case 1 – A coal-derived syngas production plant, based on the BGL 1000 gasifier being marketed in North America by Allied Syngas Corporation, with a nominal gasifier capacity of approximately 1000 MMBtu/hr (MMBtu/hr) of synthesis gas.

Case 1A – Illinois #6 Coal as fuel, no hydrogen production

Case 1AH - Illinois #6 Coal as fuel, with hydrogen production

Case 1B – PRB Coal as fuel, no hydrogen production

Case 1BH - PRB Coal as fuel, with hydrogen production

Case 2 – A coal-derived SNG production plant, based on the BGL 1000 gasifier, for distribution through natural gas pipelines.

Case 2A – Illinois #6 Coal as fuel

Case 2B – PRB Coal as fuel

Case 2 – A gas turbine refueling configuration for a nominal 80 to 150 MWe (combined cycle equivalent) based on the Case 1 syngas configuration

Case 3A – Illinois #6 Coal as fuel

Case 3B – PRB Coal as fuel

Case 4 – A gas turbine refueling configuration for a nominal 80 to 150 MWe (combined cycle equivalent) based on the Case 3 SNG configuration

Case 4A – Illinois #6 Coal as fuel

Case 4B – PRB Coal as fuel

As part of this effort, a conceptual design and conceptual level capital and operating and maintenance cost estimates were developed for an SNG Production Reference Plant, based on a single operating BGL 1000 gasifier. Allied Syngas Corporation and Envirotherm GmbH provided the gasifier performance and composition, temperature, and pressure of the syngas from the gasification process. A model of the gasification process integrated with the major supporting systems was developed using ASPEN Plus™ and mass and energy balance calculations were performed using the model. These data were used to define the functional requirements of the systems, performance estimates, and conceptual specifications of end-use equipment.

The design of the syngas production portion of this application is based on the Syngas Production Reference Plant conceptual design described in the Section VI Conceptual Design Description – Syngas Production Reference Plant – Illinois #6 Coal. There are minor modifications to the Syngas Production Reference Plant to improve the efficiency and minimize the cost for this application. The modifications are as follows:

- Only a portion of the syngas from the primary heat exchanger in the gasification process is sent through the syngas coolers, the remainder is sent to a water-gas shift reaction system. A small amount of the syngas from the syngas coolers is used for feedlock purging in the gasification process instead of nitrogen, and the major portion of the syngas from the syngas coolers is combined with the syngas from the water-gas shift reaction system and sent to the acid gas removal (AGR) system.
- CO-rich tailgas from the Rectisol AGR system is used as fuel for the fired boiler generating steam for the processes instead of being recombined with syngas from the Rectisol AGR. Syngas from the Rectisol AGR system is sent to a methanation process for the production of SNG.

The SNG Production Reference Plant design is based on the requirements defined in the Conceptual Design Requirements Document in Section V. The requirements include the following:

- Fuel for the gasifier is Illinois #6 coal. The composition of the coal is defined in the DRD.

- Limestone is used as the flux in the gasifier.
- The gasifier uses an oxidant that contains 99.5% oxygen purchased from a third party who owns and operates an air separation unit (ASU) on the site. Nitrogen for purging is also purchased from the third party.
- Electrical power is purchased from a local provider.
- The gasifier will produce a medium-Btu syngas
- A Rectisol process will be used for syngas cleanup.
- Elemental sulfur will be produced as a byproduct
- A methanation process will produce an SNG meeting pipeline quality natural gas specifications
- The gasifier process package design will be provided by Envirotherm/Allied Syngas Corporation and will consist of all equipment/systems from the coal/flux feed lock to the inlet of the syngas acid gas removal (AGR) system and the discharge of the slag lock, including the tar/oil separation system and reinjection system.
- The gasifier process package will include a spare gasifier complete with coal/flux feed lock, gasifier, gas wash cooler, slag quench vessel, and slag lock vessel
- Capital cost estimates for the gasifier process will be based on a WorleyParsons' in-house BGL IGCC cost model utilized for previous IGCC evaluations.
- Capital cost estimates for other systems will be based on a combination of WorleyParsons' in-house cost data and budgetary quotes provided by equipment supplies.
- Construction labor costs will be based on Gulf Coast non-union labor rates.

This report describes a conceptual design analysis, as well as conceptual level cost estimates that are based upon approximate methods. The data developed are not at sufficient depth to be used for design or construction purposes. Cost data are only suited for planning and budget estimation purposes only, and are not of sufficient depth of detail to justify major capital investment.

The Reference SNG Production Plant produces approximately 791 MMBtu/hr of SNG product meeting pipeline natural gas specifications from approximately 1,118 MMBtu/hr of Illinois #6 coal. The net plant

thermal efficiency (as defined in the DOE Quality Guidelines for Energy System Studies for a fuel production plant) is about 59%.

The following sections provide descriptions of the major systems and equipment comprising the SNG production plant, estimated performance characteristics, mass and energy balances of the major systems, and capital and operating cost estimates. Although the syngas production portion of the plant in this application is based on that described in the Conceptual Design Description – Syngas Production Reference Plant – Illinois #6 Coal, as previously noted, the description of the syngas production portion is also included in this document to provide a complete, stand-alone description of the SNG Production Reference Plant.

VIII.2 SYSTEM DESCRIPTION AND PERFORMANCE

This section contains the system description, heat and mass balances, and performance estimates for the SNG Production Reference Plant using Illinois #6 Coal.

VIII.2.1 SYSTEM DESCRIPTION

The system is an industrial size SNG production plant producing approximately 34,469 lb/hr of pipeline quality SNG with a higher heating value of about 22,956 Btu/lb (985 Btu/scf[a]) and lower heating value of about 20,670 Btu/lb (885 Btu/scf[a]). A sketch showing the major processes comprising the system is presented in Exhibit VIII.2-1. The system contains the following processes:

- A gasifier process package consisting of an oxygen-fired BGL gasifier producing a medium Btu syngas; coal/limestone feed lock for introducing feedstock into the gasifier; syngas wash cooler and primary heat exchanger for cooling the syngas and removing tars, oils, and particulates from the syngas; gas liquor separation and tar/oil recycle process for removing tars and oils from syngas condensate for reinjection into the gasifier; syngas coolers for decreasing the temperature of the syngas to meet the requirements of the syngas cleanup system; and a slag quench vessel and slag lock for removing slag from the gasifier.
- A spare gasifier with coal/limestone feed lock, gas wash cooler, slag quench vessel, and slag lock vessel.
- A syngas cleanup system consisting of a Rectisol acid gas removal system (AGR) for removal and concentration of acid gases (H_2S and COS) from the syngas to the levels required for the methanation process, and a Claus plant for producing elemental sulfur byproduct, from sulfur in the acid gas, for sale to industrial users. The Rectisol AGR system is also used to

[a] Standard Conditions : 14.7 psia, 60°F

remove benzene, toluene, and xylene (naphtha-BTX) from the syngas stream for recycle to the gasifier;

- A water-gas shift reaction system for increasing the hydrogen to carbon ratio of the syngas to that required for the methanation process.
- A methanation process for producing SNG from the syngas.
- A waste water treatment system for removing contaminants from the liquor prior to recycling the waste water or discharging it to the environment.
- A coal receiving, storage, and delivery system for removing coal from trucks and delivering it to a coal storage area and then to the gasifier process coal feeding system.
- A limestone (flux) receiving, storage, and delivery system for removing limestone from trucks and delivering it to a limestone storage area and then to the gasifier process limestone feeding system.
- Slag handling system for collecting the slag discharged from the slag lock and transporting the slag to a storage and truck loading area.
- An air separation unit (ASU) owned and operated by a third party that provides oxygen and nitrogen to the gasification process.
- A steam system for providing deaerated water to processes and generating steam for the gasification process.
- Circulating water system that provides cooling water to the processes.
- Balance of Plant systems for supporting the gasification process, including:
    - Process water supply system;
    - Flare system for combusting syngas during start-up and system upsets;
    - Air supply system;
    - Natural gas supply system;
    - Electrical system;
    - Instrumentation and control system; and
    - Chemical and byproduct storage.

Exhibit VIII.2-1 Sketch of the Major Systems Comprising the SNG Production Reference Plant

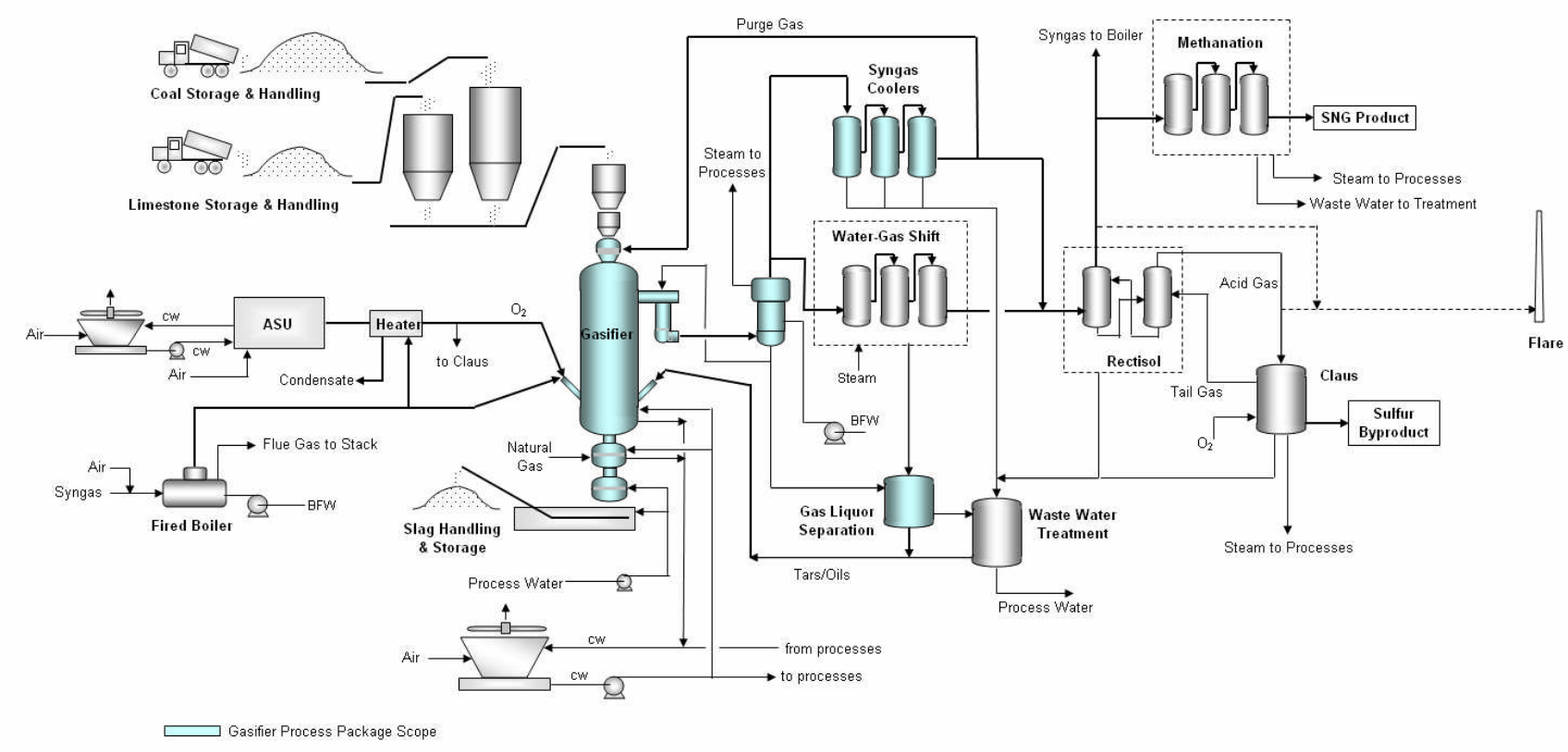

VIII.2.2 HEAT & MATERIAL BALANCE, PERFORMANCE ESTIMATES, AND EMISSIONS ESTIMATES

A summary of the estimated performance resulting from heat and mass balance calculations are presented in Exhibit VIII.2-2. Conceptual process flow diagrams of the major systems comprising the SNG production plant are shown in Exhibit VIII.2-3 through Exhibit VIII.2-10. Estimated state point compositions and conditions for flow streams identified with numbers in the process flow diagrams are provided in Exhibit VIII.2-11 through Exhibit VIII.2-18.

The plant consumes about 95,409 lb/hr (1,118 Btu/hr) of Illinois #6 coal to produce a total of 34,469 lb/hr (about 791 MMBtu/hr) of SNG. Therefore, about 70% of the energy content of the coal is recovered in the SNG product. An additional approximate 36 MMBtu/hr of energy in syngas and tailgas streams produced in the process is used in a fired boiler to produce steam for the processes. About 2,944 lb/hr of elemental sulfur is produced as a co-product.

The auxiliary power requirements of the SNG production plant are estimated to be about 8,804 kWe, excluding the ASU power requirements. The ASU electrical requirements are expected to be about 9,700 kWe. The total SNG production plant thermal efficiency, defined in accordance with the DOE Quality Guidelines for Energy System Studies, is thus about 60%. The DOE guidelines define the thermal efficiency of fuel-only systems as the heating value energy of all the product fuels divided by the total heating value energy of all direct and indirect input fuels. The product fuel in the case is the SNG, since the syngas and tailgas streams are used internally to generate the steam required for the processes. The direct fuel in this case is coal to the gasifier, and the indirect input fuels are the fuels converted outside the process to produce the electrical power required by the syngas production and ASU plants. In accordance with the DOE guidelines, a fuel energy-to-electrical energy conversion HHV efficiency of 32.8% was used for the indirect fuels.

The annual capacity factor of the SNG production plant, defined as the plant annual syngas production divided by the rated output times 8,760 hours[b], is expected to be about 95% with the inclusion of the spare gasifier. Information published by The Dakota Gasification

[b] Defined in accordance with DOE Quality Guidelines for Energy System Studies

Company indicates that the Great Plains Synfuels Plant has successfully operated 14 Lurgi gasifiers without a spare while maintaining an annual plant loading as high as 92%.[c] That is, the plant annually produces up to 92% of its rated output capacity. Personnel with experience at the Great Plains Synfuels Plant indicate that corrosion issues in the boiler system, which uses H_2S-rich waste gas from the Rectisol Process as fuel, has historically cost the plant over 2% in availability. The Reference Plant conceptual design for this study sends the H_2S rich gas to a Claus Unit for recovery of sulfur, and uses clean gas from the Rectisol Process as the fuel in the fired boiler. It has also been indicated that because the Great Plains Synfuels Plant has been operating at greater than design capacity, the resulting hydraulic overload of the gas liquor separation system and Phenosolvan system, and its impact on the plant cooling water system, has adversely affected annual plant capacity factor. The incorporation of a dedicated spare gasifier in the Reference Plant is expected to further increase the plant capacity factor over that achieved in the Great Plains Synfuels Plant.

[c] CO_2 Recovery and Sequestration at Dakota Gasification Company. Daren Eliason. 2004 Gasification Technologies Conference. October 4, 2004.

Exhibit VIII.2-2 SNG Production Reference Plant Estimated Performance Summary

Production Figures (average)	
SNG Product Flow, lb/hr (scfh x 10^6)	34,469 (0.8)
SNG Higher Heating Value, Btu/lb (Btu/scf)[a]	22,956 (985)
SNG Lower Heating Value, Btu/lb (Btu/scf)	20,670 (885)
Elemental Sulfur Product, lb/hr	2,944
Slag, lb/hr	13,787
Consumption Figures (average)	
Coal Thermal Input , MMBtu/hr (HHV)[b]	1,118
Coal Feed, lb/hr	95,409
Flux (Limestone) Feed, lb/hr	2,442
Oxygen to Gasifier and Claus Furnace, lb/hr	48,347
Steam to Gasifier[c], lb/hr	29,158
Cooling Makeup Water (SNG Plant), lb/hr	131,940
Process Makeup Water[d], lb/hr	136168
Methanol, lb/hr	50
Aux. Electric Power (Syngas Plant), kWe	8,804
ASU Electric Power, kWe	9,700
ASU Cooling Makeup Water, lb/hr	27,100
Plant Equivalent Efficiency	
Fuel and Power Energy Input[e], MMBtu/hr	1,310
Energy in SNG Product, MMBtu/hr	791
Plant Net Thermal Efficiency[f], %	60.4
Emissions	
Syngas Fired Boiler	
SO_2 , lb/MMBtu	< 0.003
NOx, lb/MMBtu[g]	< 0.1
Hg, lb/trillionBtu[h]	< 0.001
CO_2 , lb/MMBtu	<225

Note a: Standard Conditions: 14.7 psia, 60°F
Note b Based on Illinois #6 coal with HHV of 11,714 Btu/lb
Note c: Generated in a fired boiler using syngas and tailgas from processes as fuel
Note d: A detailed optimization of water recycling in the plant was not performed. An optimization study may reduce the process water makeup requirement
Note e: Coal energy plus purchased aux. power and ASU power expressed as thermal energy to utility power generation plant with HHV efficiency of 32.8%.
Note f: Defined in accordance with DOE Quality Guidelines for Energy System Studies as energy in fuel product (SNG) divided by fuel energy input as defined in Note d.
Note g: Without post-combustion controls (e.g. SCR)
Note h: Based on Hg content in coal of < 0.12 ppm and 90% or higher removal efficiency.

Exhibit VIII.2-3 Gasification and Gas Cooling Conceptual Process Flow Diagram

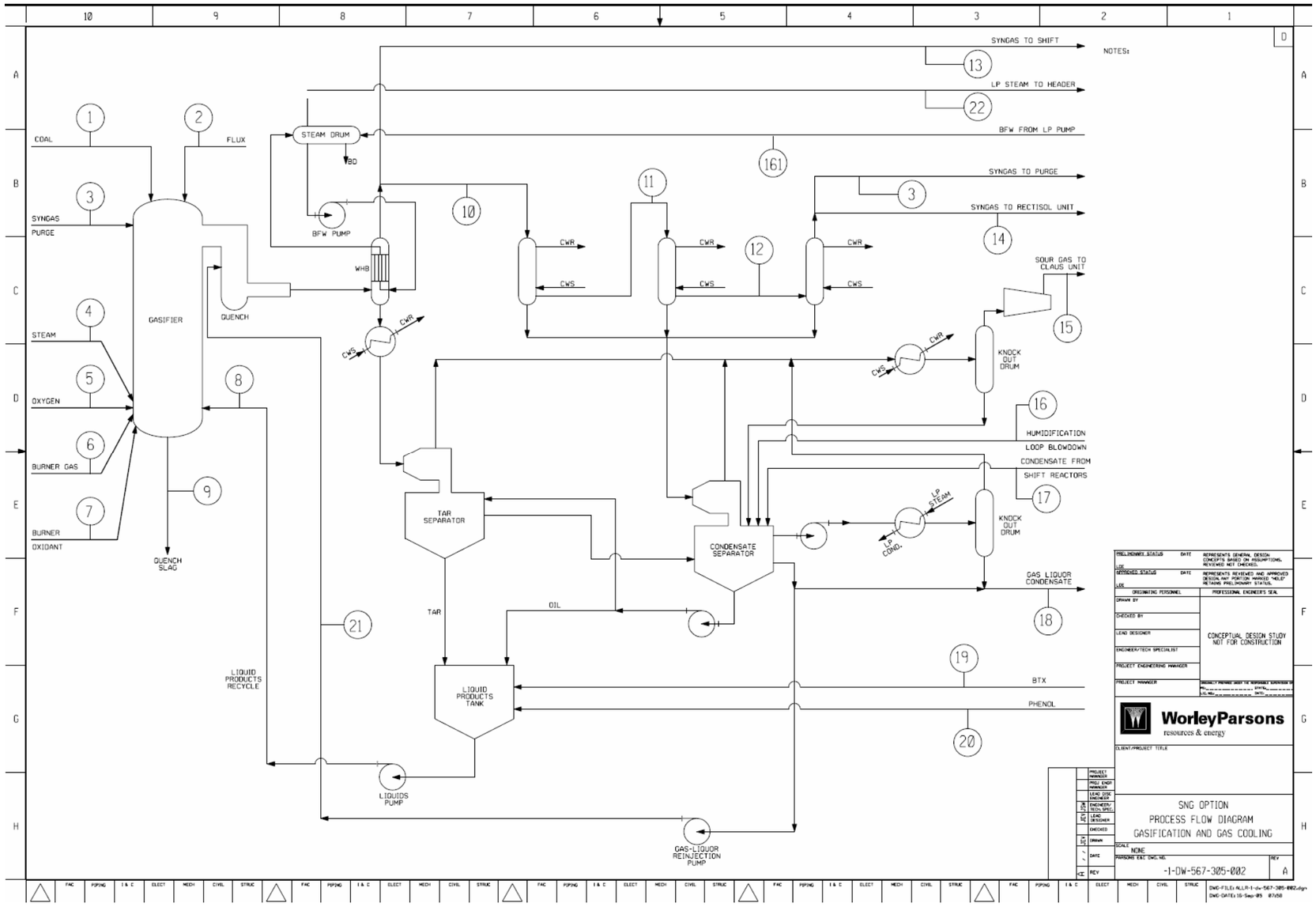

This page is intentionally left blank

Exhibit VIII.2-4 Rectisol System Conceptual Process Flow Diagram

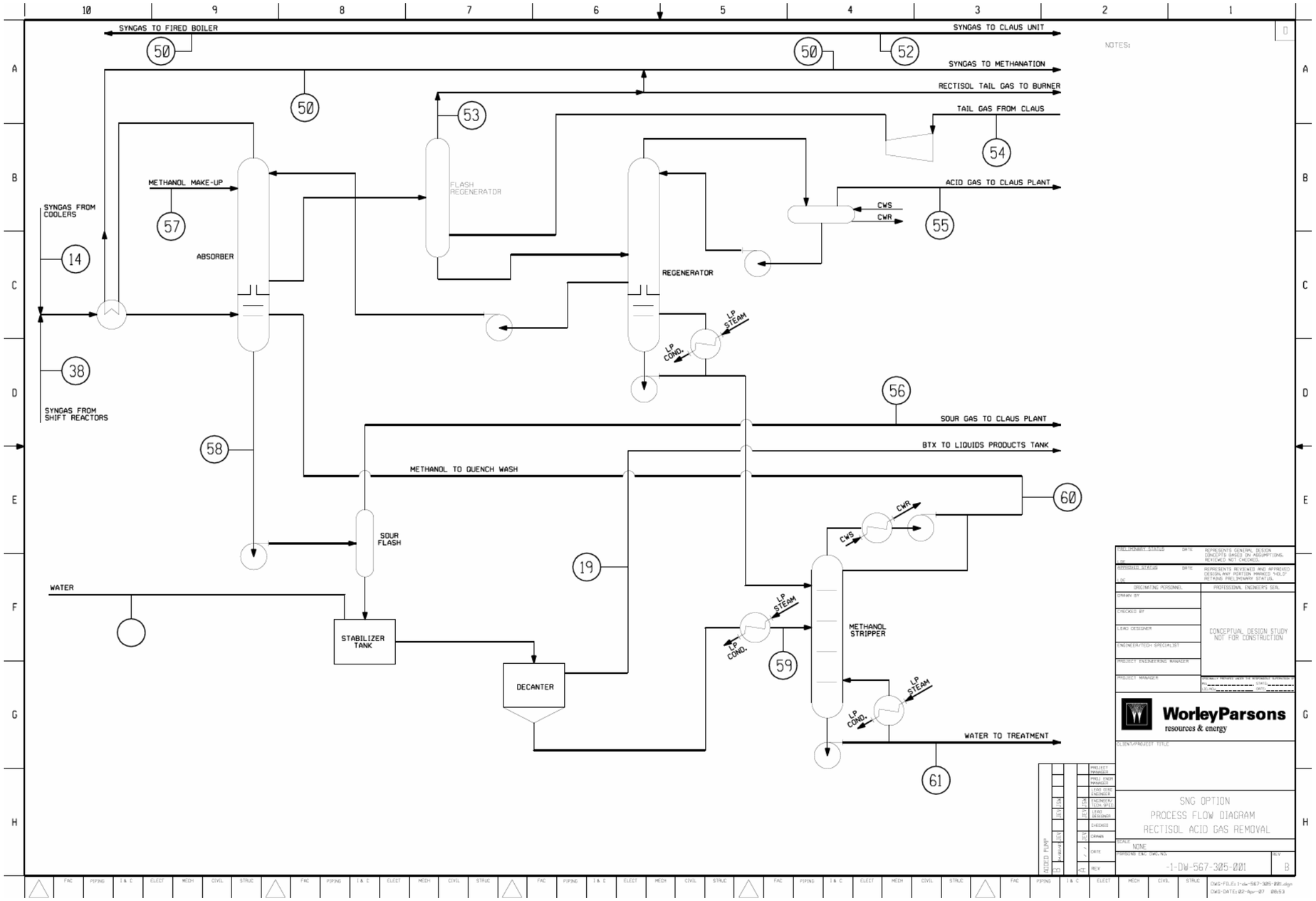

This page is intentionally left blank

Exhibit VIII.2-5 Sulfur Production (Claus) System Conceptual Process Flow Diagram

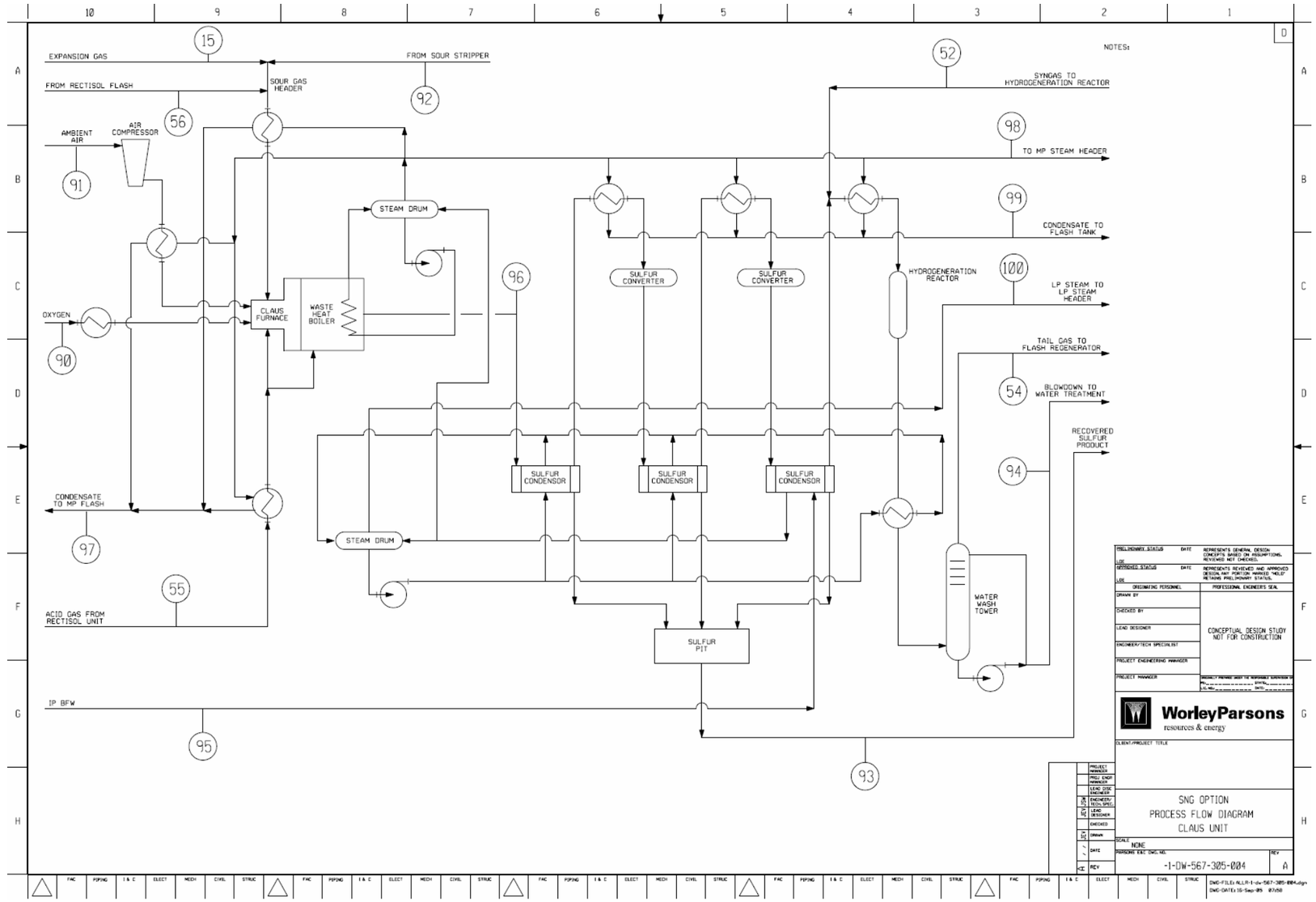

This page is intentionally left blank

Exhibit VIII.2-6 Waste Water Treatment System Conceptual Process Flow Diagram

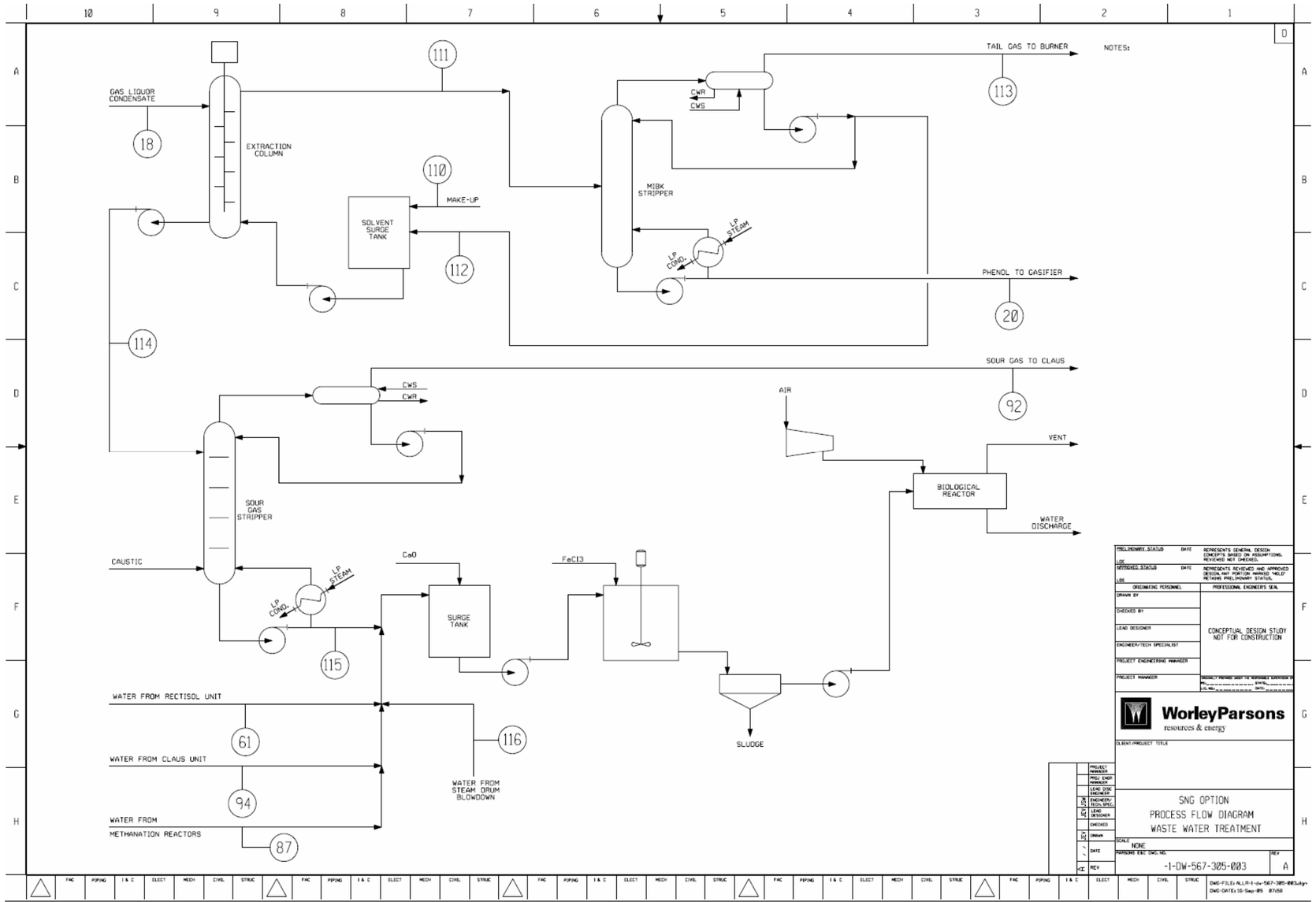

This page is intentionally left blank

Exhibit VIII.2-7 Steam System Conceptual Process Flow Diagram

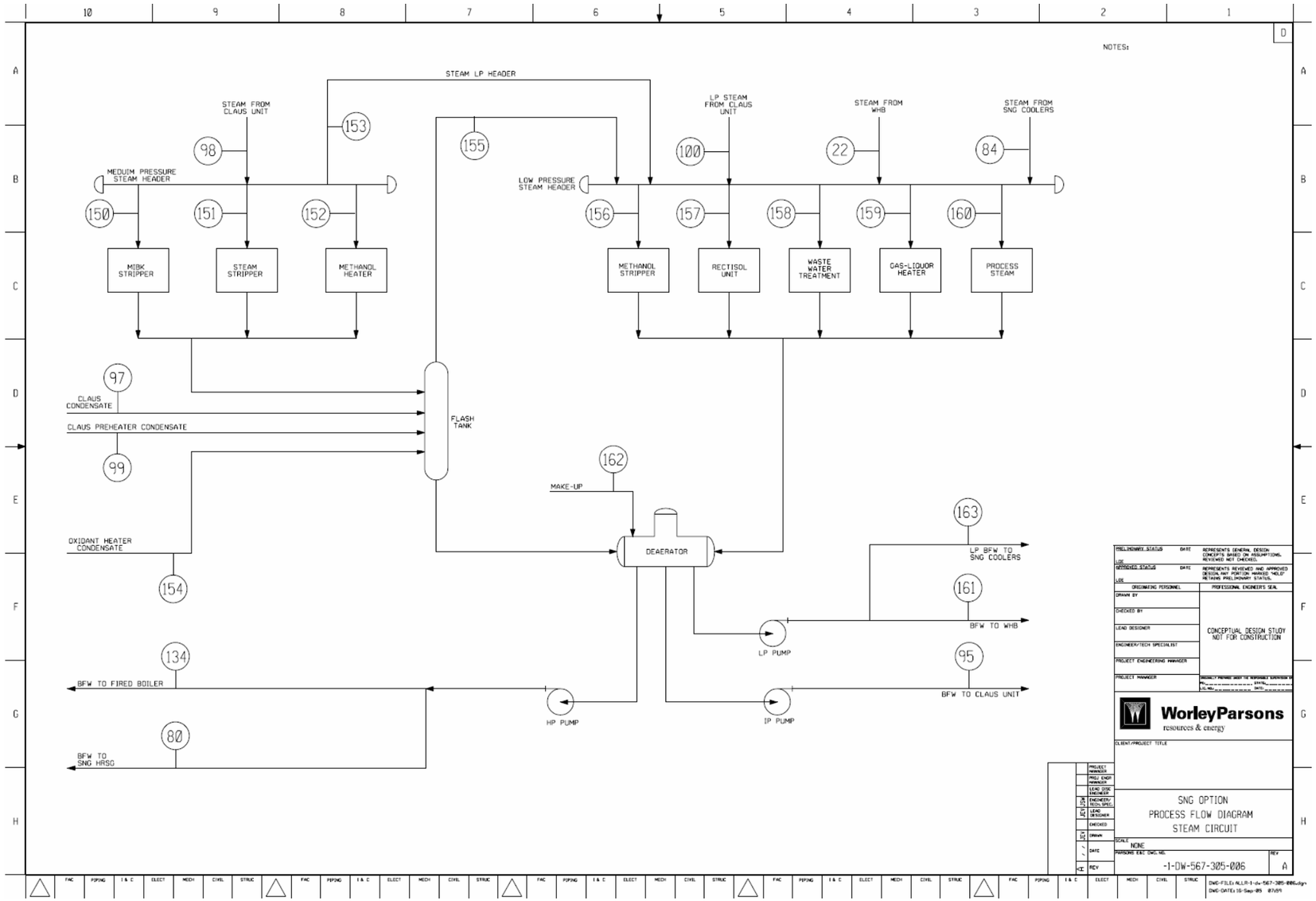

This page is intentionally left blank

Exhibit VIII.2-8 Syngas-fired Boiler Conceptual Process Flow Diagram

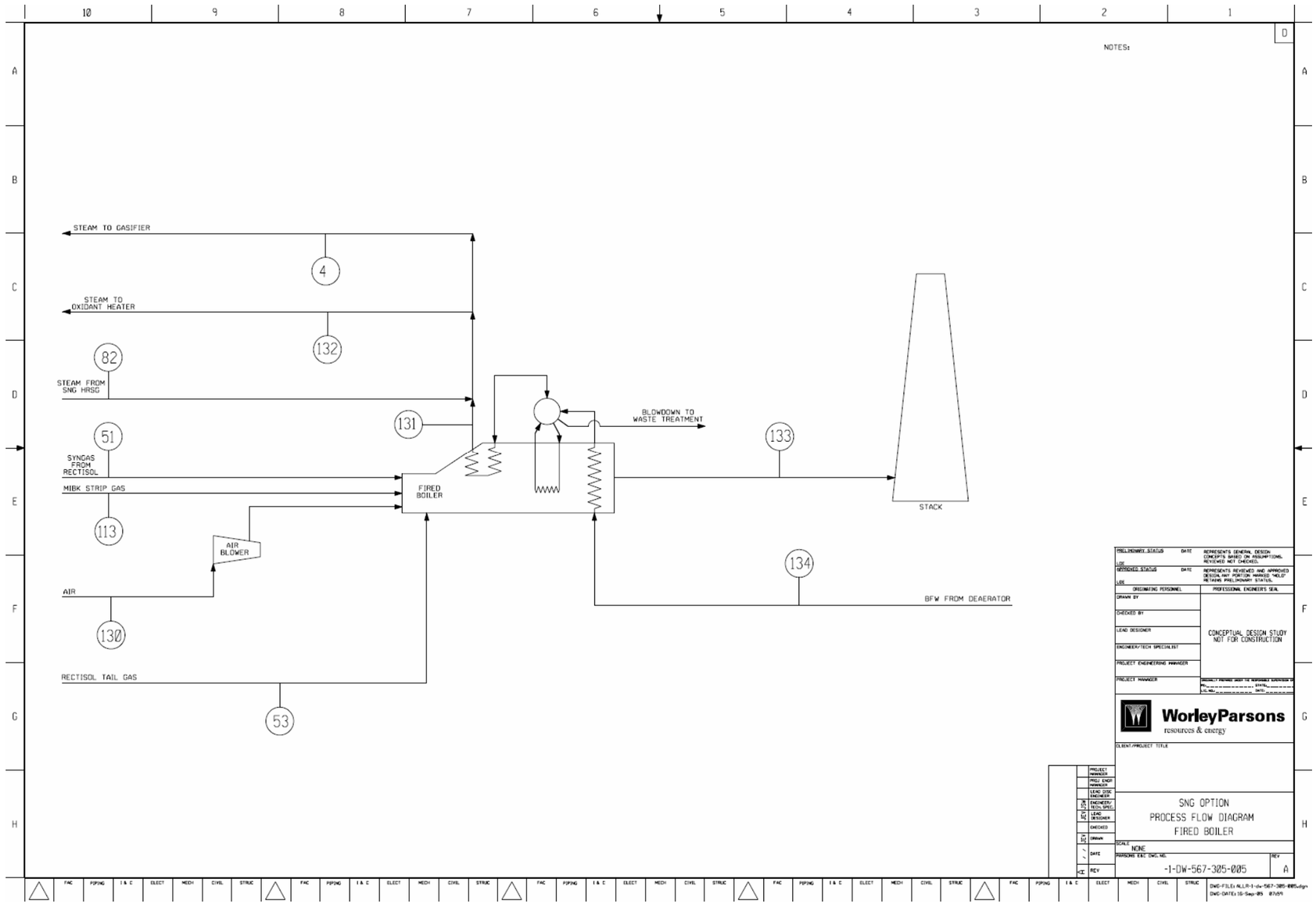

This page is intentionally left blank

Exhibit VIII.2-9 Water-Gas Shift Reaction System Conceptual Process Flow Diagram

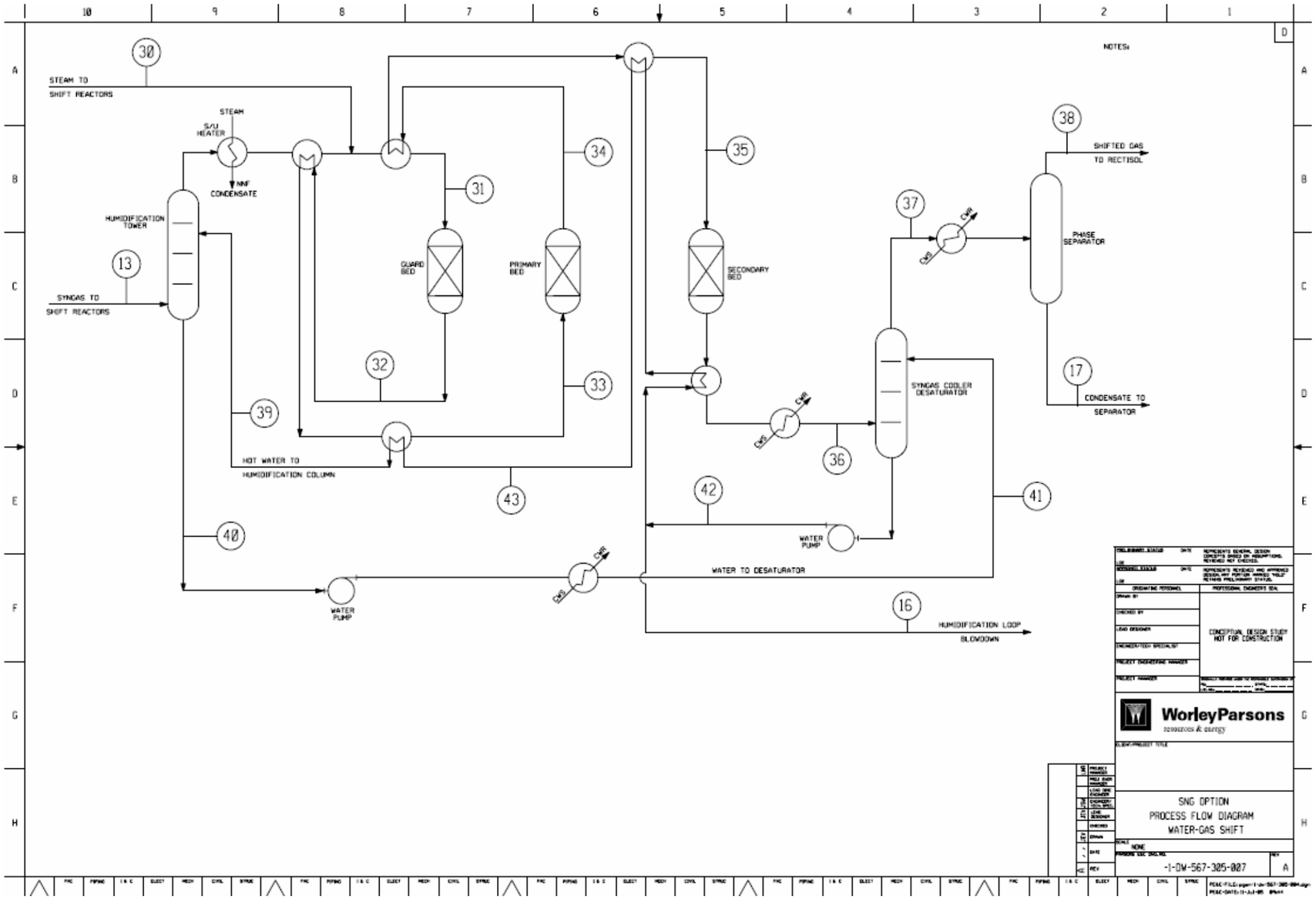

This page is intentionally left blank

Exhibit VIII.2-10 Methanation System Conceptual Process Flow Diagram

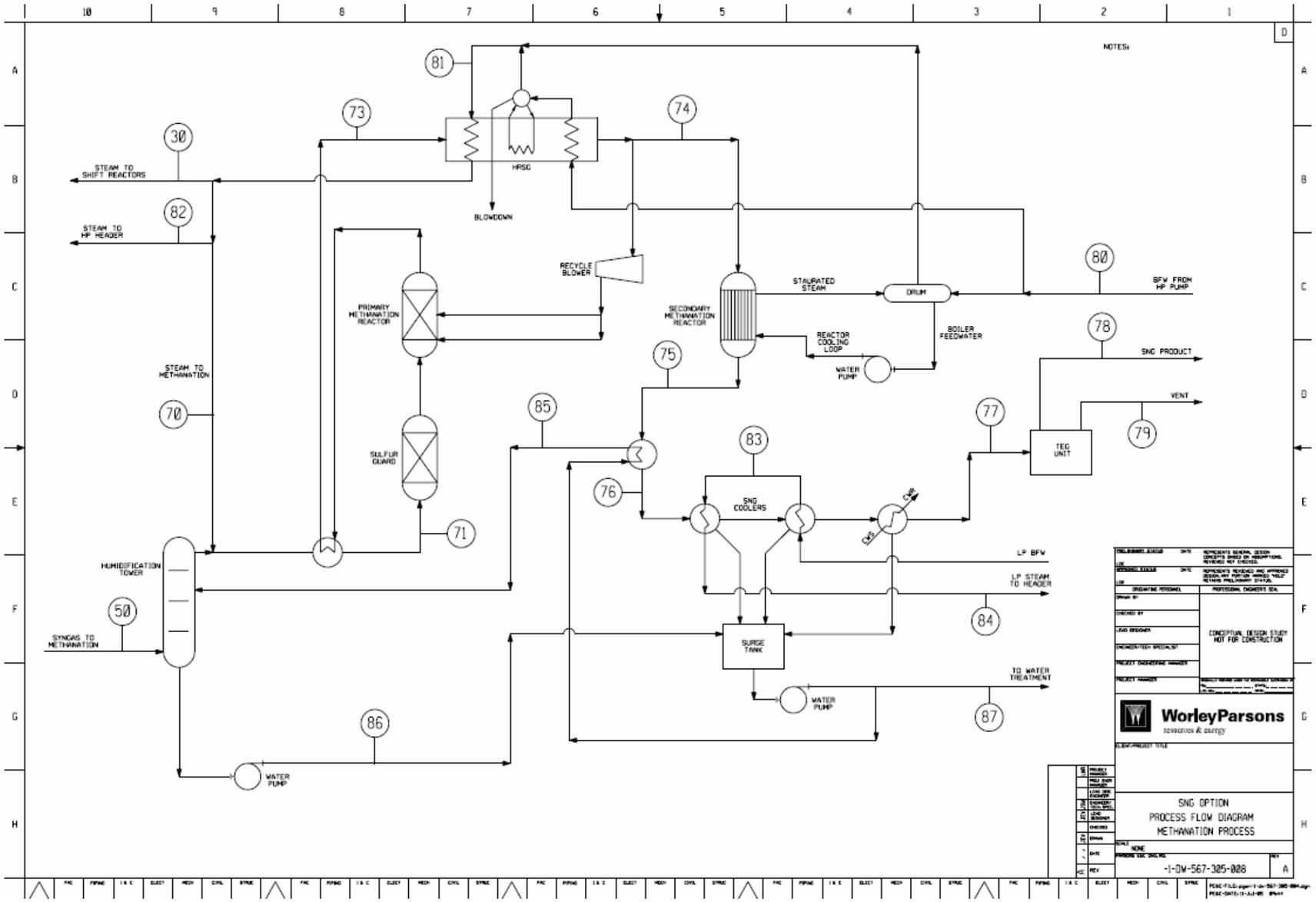

This page is intentionally left blank

Exhibit VIII.2-11 Gasification and Gas Cooling Systems Estimated State Point Conditions and Compositions

SNG Option - Gasifier, Gas Cooling, and Gas Liquor Condensate Separation Material Balance (pg. 1 of 2)

STREAM	1		2		3		4		5		6		7		8		9		10		11	
Description	Coal to Gasifier		Flux to Gasifier		Syngas Purge		Steam to Gasifier		Oxygen to Gasifier		Burner Gas		Oxidant to Burner		Liquid Products Recycle		Slag		Crude Syngas to Gas Coolers		Crude Syngas	
Flow	lbmol/hr	lb/hr	lbmol/hr	lb/hr	lbmol/hr	lb/hr	lbmol/hr	lb/hr	lbmol/hr	lb/hr	lbmol/hr	lb/hr	lbmol/hr	lb/hr	lbmol/hr	lb/hr	lbmol/hr	lb/hr	lbmol/hr	lb/hr	lbmol/hr	lb/hr
AR	0.00	0.00	0.00	0.00	0.00	0.01	0.00	0.00	0.00	0.00	0.00	0.00	0.01	0.40	0.00	0.00	0.00	0.00	0.00	0.12	0.00	0.12
BTX	0.00	0.00	0.00	0.00	0.24	21.91	0.00	0.00	0.00	0.00	0.00	0.00	0.00	0.00	7.59	699.35	0.00	0.00	2.39	220.39	2.39	220.38
CH4	0.00	0.00	0.00	0.00	13.61	218.35	0.00	0.00	0.00	0.00	8.45	135.58	0.00	0.00	0.00	0.00	0.00	0.00	136.92	2196.61	136.91	2196.52
C2H4	0.00	0.00	0.00	0.00	0.11	3.04	0.00	0.00	0.00	0.00	0.02	0.60	0.00	0.00	0.00	0.00	0.00	0.00	1.09	30.59	1.09	30.59
C2H6	0.00	0.00	0.00	0.00	0.54	16.21	0.00	0.00	0.00	0.00	0.00	0.00	0.00	0.00	0.00	0.00	0.00	0.00	5.42	163.09	5.42	163.08
C3H6	0.00	0.00	0.00	0.00	0.04	1.84	0.00	0.00	0.00	0.00	0.02	0.90	0.00	0.00	0.00	0.00	0.00	0.00	0.44	18.49	0.44	18.49
C3H8	0.00	0.00	0.00	0.00	0.23	10.01	0.00	0.00	0.00	0.00	0.00	0.00	0.00	0.00	0.01	0.59	0.00	0.00	2.28	100.67	2.28	100.66
C4H8	0.00	0.00	0.00	0.00	0.03	1.85	0.00	0.00	0.00	0.00	0.00	0.00	0.00	0.00	0.02	1.09	0.00	0.00	0.33	18.59	0.33	18.59
C4H10	0.00	0.00	0.00	0.00	0.09	5.14	0.00	0.00	0.00	0.00	0.00	0.00	0.00	0.00	0.05	2.85	0.00	0.00	0.89	51.72	0.89	51.72
CH3OH	0.00	0.00	0.00	0.00	0.00	0.00	0.00	0.00	0.00	0.00	0.00	0.00	0.00	0.00	0.05	1.60	0.00	0.00	0.00	0.00	0.00	0.00
CO	0.00	0.00	0.00	0.00	124.92	3498.92	0.00	0.00	0.00	0.00	0.00	0.00	0.00	0.00	0.00	0.00	0.00	0.00	1256.65	35198.65	1256.64	35198.46
CO2	0.00	0.00	0.00	0.00	9.87	434.38	0.00	0.00	0.00	0.00	0.02	0.76	0.00	0.00	1.87	82.30	0.00	0.00	99.31	4370.63	99.29	4369.78
COS	0.00	0.00	0.00	0.00	0.14	8.53	0.00	0.00	0.00	0.00	0.00	0.00	0.00	0.00	0.00	0.00	0.00	0.00	1.43	85.91	1.43	85.86
HCN	0.00	0.00	0.00	0.00	0.07	1.79	0.00	0.00	0.00	0.00	0.00	0.00	0.00	0.00	0.00	0.00	0.00	0.00	0.67	17.99	0.67	17.98
HCL	0.00	0.00	0.00	0.00	0.00	0.00	0.00	0.00	0.00	0.00	0.00	0.00	0.00	0.00	0.00	0.00	0.00	0.00	0.00	0.00	0.00	0.00
H2	0.00	0.00	0.00	0.00	68.61	138.31	0.00	0.00	0.00	0.00	0.00	0.00	0.00	0.00	0.00	0.00	0.00	0.00	690.17	1391.38	690.16	1391.37
H2O	0.00	0.00	0.00	0.00	0.53	9.60	1618.51	29157.55	0.00	0.00	0.00	0.00	0.00	0.00	0.04	0.76	0.00	0.00	714.16	12865.61	95.81	1726.03
H2S	0.00	0.00	0.00	0.00	2.64	90.09	0.00	0.00	0.00	0.00	0.00	0.00	0.00	0.00	0.46	15.51	0.00	0.00	26.69	909.46	26.61	906.70
MIBK	0.00	0.00	0.00	0.00	0.00	0.00	0.00	0.00	0.00	0.00	0.00	0.00	0.00	0.00	0.00	0.00	0.00	0.00	0.00	0.00	0.00	0.00
N2	0.00	0.00	0.00	0.00	1.43	39.98	0.00	0.00	7.51	210.48	0.08	2.17	0.12	3.22	0.00	0.00	0.00	0.00	14.36	402.18	14.36	402.18
NH3	0.00	0.00	0.00	0.00	0.00	0.00	0.00	0.00	0.00	0.00	0.00	0.00	0.00	0.00	0.00	0.00	0.00	0.00	0.00	0.00	0.00	0.00
O2	0.00	0.00	0.00	0.00	0.00	0.00	0.00	0.00	1495.14	47841.33	0.00	0.00	22.80	729.55	0.00	0.00	0.00	0.00	0.00	0.00	0.00	0.00
PHENOL	0.00	0.00	0.00	0.00	0.00	0.00	0.00	0.00	0.00	0.00	0.00	0.00	0.00	0.00	1.70	159.99	0.00	0.00	0.00	0.00	0.00	0.00
SO2	0.00	0.00	0.00	0.00	0.00	0.00	0.00	0.00	0.00	0.00	0.00	0.00	0.00	0.00	0.00	0.00	0.00	0.00	0.00	0.00	0.00	0.00
Mass Flow, lb/hr																						
Coal	95,409		0		0		0		0		0		0		0		0		0		0	
Flux	0		2442		0		0		0		0		0		0		0		0		0	
Oil	0		0		0		0		0		0		0		2099		0		0		0	
Slag	0		0		0		0		0		0		0		0		13787		0		0	
Sulfur	0		0		0		0		0		0		0		0		0		0		0	
Tar	0		0		0		0		0		0		0		4902		0		0		0	
Total Flow lbmol/hr	n/a		n/a		223		1,619		1,503		9		23		n/a		n/a		2,953		2,335	
Total Flow lb/hr	95,409		2,442		4,500		29,158		48,053		140		733		7,965		13,787		58,043		46,899	
Total Flow cuft/hr	n/a		n/a		3,979		38,813		26,564		96		256		n/a		n/a		71,010		49,535	
Temperature F	60		60		95		680		392		60		60		100		n/a		311		208	
Pressure psi	n/a		n/a		333		510		517		500		500		500		n/a		340		338	
Vapor Frac	n/a		n/a		1		1		1		1		1		0		n/a		0.9997		1	
Liquid Frac	n/a		n/a		0		0		0		0		0		1		n/a		0.0003		0	
Enthalpy Btu/lb	n/a		n/a		-1,808		-5,491		71		-1,959		-4		n/a		n/a		-2,598		-1,904	
Density lb/cuft	n/a		n/a		1.1311		0.7512		1.8089		1.4616		2.8674		n/a		n/a		0.8174		1	
Average MW	n/a		n/a		20.1710		18.0153		31.9789		16.3016		31.9823		n/a		n/a		19.6542		20	

5/18/2006 13:36

This page is intentionally left blank

Exhibit VIII.2-11 (cont'd) Gasification and Gas Cooling Systems Estimated State Point Conditions and Compositions

SNG Option - Gasifier, Gas Cooling, and Gas Liquor Condensate Separation Material Balance (pg. 2 of 2)

STREAM	12		13		14		15		16		17		18		19		20		21		22	
Description	Crude Syngas		Crude Syngas to Sour Shift		Syngas to Rectisol Unit		Expansion Gas to Claus Unit		Humidification Loop Blowdown		Condensate from Shift Reactors		Gas Liquor Condensate		BTX Recycle to Gasifier		Phenol Recycle to Gasifier		Quench Water		LP Steam to LP Steam Header	
Flow	lbmol/hr	lb/hr	lbmol/hr	lb/hr	lbmol/hr	lb/hr	lbmol/hr	lb/hr	lbmol/hr	lb/hr	lbmol/hr	lb/hr	lbmol/hr	lb/hr	lbmol/hr	lb/hr	lbmol/hr	lb/hr	lbmol/hr	lb/hr	lbmol/hr	lb/hr
AR	0.00	0.12	0.01	0.29	0.00	0.11	0.00	0.00	0.00	0.00	0.00	0.00	0.00	0.00	0.00	0.00	0.00	0.00	0.00	0.00	0.00	0.00
BTX	2.39	220.38	5.85	539.41	2.15	198.48	0.00	0.00	0.00	0.14	0.00	0.00	0.00	0.26	7.60	700.62	0.00	0.00	0.00	0.00	0.00	0.00
CH4	136.91	2196.52	335.11	5376.25	123.30	1978.17	0.02	0.35	0.02	0.27	0.00	0.02	0.03	0.44	0.00	0.01	0.00	0.00	0.00	0.00	0.00	0.00
C2H4	1.09	30.59	2.67	74.88	0.98	27.55	0.00	0.02	0.00	0.01	0.00	0.00	0.00	0.00	0.00	0.01	0.00	0.00	0.00	0.00	0.00	0.00
C2H6	5.42	163.08	13.27	399.15	4.88	146.87	0.00	0.08	0.00	0.03	0.00	0.00	0.00	0.00	0.00	0.07	0.00	0.00	0.00	0.00	0.00	0.00
C3H6	0.44	18.49	1.08	45.26	0.40	16.65	0.00	0.01	0.00	0.00	0.00	0.00	0.00	0.00	0.00	0.13	0.00	0.00	0.00	0.00	0.00	0.00
C3H8	2.28	100.66	5.59	246.38	2.06	90.66	0.00	0.02	0.00	0.01	0.00	0.00	0.00	0.00	0.01	0.62	0.00	0.00	0.00	0.00	0.00	0.00
C4H8	0.33	18.59	0.81	45.50	0.30	16.74	0.00	0.00	0.00	0.00	0.00	0.00	0.00	0.00	0.02	1.11	0.00	0.00	0.00	0.00	0.00	0.00
C4H10	0.89	51.72	2.18	126.57	0.80	46.57	0.00	0.01	0.00	0.00	0.00	0.00	0.00	0.00	0.05	2.85	0.00	0.00	0.00	0.00	0.00	0.00
CH3OH	0.00	0.00	0.00	0.00	0.00	0.00	0.00	0.00	0.00	0.00	0.00	0.00	0.00	0.00	0.02	0.54	0.00	0.00	0.00	0.00	0.00	0.00
CO	1256.64	35198.46	3075.67	86149.40	1131.72	31699.53	0.05	1.39	0.00	0.12	0.00	0.00	0.01	0.15	0.00	0.00	0.00	0.00	0.00	0.00	0.00	0.00
CO2	99.29	4369.71	243.07	10697.21	89.42	3935.34	1.79	78.91	0.59	26.09	0.09	4.09	4.18	184.12	1.90	83.57	0.00	0.00	0.00	0.00	0.00	0.00
COS	1.43	85.86	3.50	210.27	1.29	77.32	0.00	0.07	0.00	0.00	0.00	0.00	0.00	0.14	0.01	0.46	0.00	0.00	0.00	0.00	0.00	0.00
HCN	0.67	17.97	1.63	44.03	0.60	16.19	0.00	0.02	0.00	0.02	0.00	0.01	0.00	0.07	0.00	0.05	0.00	0.00	0.00	0.00	0.00	0.00
HCL	0.00	0.00	0.00	0.00	0.00	0.00	0.00	0.00	0.00	0.00	0.00	0.00	2.50	91.28	0.00	0.00	0.00	0.00	0.00	0.00	0.00	0.00
H2	690.16	1391.37	1689.20	3405.44	621.56	1253.06	0.07	0.14	0.05	0.10	0.00	0.00	0.02	0.04	0.00	0.00	0.00	0.00	0.00	0.00	0.00	0.00
H2O	12.58	226.62	1747.92	31488.83	4.83	86.93	0.43	7.67	1434.93	25850.23	987.34	17786.98	1296.00	23347.48	0.04	0.75	0.00	0.00	2961.85	53357.75	977.50	17609.73
H2S	26.60	906.37	65.31	2225.93	23.95	816.25	0.06	2.16	0.10	3.56	0.07	2.25	0.34	11.60	0.46	15.51	0.00	0.00	0.00	0.00	0.00	0.00
MIBK	0.00	0.00	0.00	0.00	0.00	0.00	0.00	0.00	0.00	0.00	0.00	0.00	0.00	0.00	0.00	0.00	0.00	0.00	0.00	0.00	0.00	0.00
N2	14.36	402.18	35.14	984.35	12.93	362.20	0.00	0.03	0.00	0.01	0.00	0.00	0.00	0.00	0.00	0.00	0.00	0.00	0.00	0.00	0.00	0.00
NH3	0.00	0.00	0.00	0.00	0.00	0.00	0.00	0.00	0.00	0.00	0.00	0.00	3.86	65.71	0.00	0.00	0.00	0.00	0.00	0.00	0.00	0.00
O2	0.00	0.00	0.00	0.00	0.00	0.00	0.00	0.00	0.00	0.00	0.00	0.00	0.00	0.00	0.00	0.00	0.00	0.00	0.00	0.00	0.00	0.00
PHENOL	0.00	0.00	0.00	0.00	0.00	0.00	0.00	0.00	0.00	0.00	0.00	0.00	1.71	160.93	0.00	0.00	1.70	160.21	0.00	0.00	0.00	0.00
SO2	0.00	0.00	0.00	0.00	0.00	0.00	0.00	0.00	0.00	0.00	0.00	0.00	0.00	0.00	0.00	0.00	0.00	0.00	0.00	0.00	0.00	0.00
Mass Flow, lb/hr																						
Coal	0		0		0		0		0		0		0		0		0		0		0	
Flux	0		0		0		0		0		0		0		0		0		0		0	
Oil	0		0		0		0		0		0		0		0		0		0		0	
Slag	0		0		0		0		0		0		0		0		0		0		0	
Sulfur	0		0		0		0		0		0		0		0		0		0		0	
Tar	0		0		0		0		0		0		0		0		0		0		0	
Total Flow lbmol/hr	2,251		7,228		2,021		2		1,436		988		1,309		10		2		2,962		978	
Total Flow lb/hr	45,399		142,061		40,769		91		25,881		17,794		23,863		806		160		53,359		17,610	
Total Flow cuft/hr	42,076		173,798		36,044		50		496		290		419		14		3		924		102,418	
Temperature F	124		311		95		202		342.9661		95		223.3976		40		313.4319		200		308	
Pressure psi	335		340		333		293		375		293		293		20		15		500		75	
Vapor Frac	1		0.9996771		1		1		0		0		0		0		0		0		1	
Liquid Frac	0		0.000322923		0		0		1		1		1		1		1		1		0	
Enthalpy Btu/lb	-1,808		-2,598		-1,808		-3,905		-6,580		-6,845		-6,569		-393		-585		-6,754		-5,685	
Density lb/cuft	1.0790		0.8174		1.1311		1.8256		52.1896		61.4200		56.9280		55.7849		59.8494		57.7405		0.1719	
Average MW	20.1641		19.6542		20.1710		37.3851		18.0267		18.0188		18.2344		79.7150		94.1130		18.0153		18.0153	

5/18/2006 13:36

This page is intentionally left blank

Exhibit VIII.2-12 Rectisol System Estimated State Point Compositions and Conditions

SNG Option - Rectisol Acid Gas Removal Material Balance (pg. 1 of 2)

STREAM	50		51		52		53		54		55		56	
Description	Sweet Syngas to Methanation		Sweet Syngas to Fired Boiler		Sweet Syngas to Claus Unit		Rectisol Tail Gas		Tail Gas From Claus Unit		Acid Gas to Claus Plant		Sour Gas to Claus Plant	
Flow	lbmol/hr	lb/hr	lbmol/hr	lb/hr	lbmol/hr	lb/hr	lbmol/hr	lb/hr	lbmol/hr	lb/hr	lbmol/hr	lb/hr	lbmol/hr	lb/hr
AR	0.01	0.39	0.00	0.0	0.00	0.0	2.36	94.34	2.39	95.34	0.02	0.95	0.00	0.00
BTX	0.10	9.4	0.00	0.01	0.00	0.01	0.03	3.16	0.00	0.01	0.00	0.00	0.24	22.24
CH4	420.27	6,742	0.65	10	0.23	4	36.37	583.56	0.13	2.01	0.37	5.89	0.35	5.60
C2H4	1.95	54.8	0.00	0.08	0.00	0.0	1.67	46.81	0.00	0.01	0.00	0.00	0.02	0.57
C2H6	9.86	296.4	0.02	0.5	0.01	0.2	8.08	243.06	0.00	0.04	0.00	0.00	0.18	5.37
C3H6	0.20	8.26	0.00	0.01	0.00	0.00	1.21	50.86	0.00	0.00	0.00	0.00	0.06	2.59
C3H8	3.75	165.3	0.01	0.25	0.00	0.1	3.47	152.89	0.00	0.02	0.00	0.00	0.40	17.76
C4H8	0.01	0.50	0.00	0.0	0.00	0.00	0.88	49.58	0.00	0.00	0.00	0.00	0.20	11.02
C4H10	0.17	10.0	0.00	0.02	0.00	0.0	2.11	122.39	0.00	0.00	0.00	0.00	0.65	37.80
CH3OH	0.00	0.00	0.00	0.00	0.00	0.00	0.00	0.00	0.00	0.00	1.24	39.66	0.02	0.50
CO	1,520.55	42,591	2.34	66	0.82	23	36.48	1,021.69	2.63	73.7	0.37	10.3	0.40	11.19
CO2	86.72	3,816	0.13	5.9	0.05	2	2,896.83	127,486.5	313.43	13,794	224.75	9,891	75.44	3,320.14
COS	0.00	0.0	0.00	0.00	0.00	0.00	0.00	0.07	0.22	13.19	1.50	90.2	0.05	2.74
HCN	0.00	0.00	0.00	0.00	0.00	0.00	0.00	0.00	0.00	0.00	0.00	0.07	2.21	59.66
HCL	0.00	0.00	0.00	0.00	0.00	0.00	0.00	0.00	0.00	0.00	0.00	0.00	0.00	0.00
H2	4,933.58	9,946	7.59	15	2.66	5	16.66	33.59	1.85	3.74	0.05	0.10	0.05	0.10
H2O	0.00	0.00	0.00	0.00	0.00	0.00	0.00	0.00	33.76	608.2	33.28	599.5	0.02	0.39
H2S	0.00	0	0.00	0.00	0.00	0.00	0.05	1.57	3.24	110.3	92.05	3,137	1.41	48.09
MIBK	0.00	0.00	0.00	0.00	0.00	0.00	0.00	0.00	0.00	0.00	0.00	0.00	0.00	0.00
N2	47.28	1,324	0.07	2	0.03	1	188.12	5,270.07	188.05	5,268	0.57	15.86	0.01	0.31
NH3	0.00	0.00	0.00	0.00	0.00	0.00	0.00	0.00	0.00	0.00	0.00	0.00	0.00	0.00
O2	0.00	0.00	0.00	0.00	0.00	0.00	0.00	0.00	0.00	0.00	0.00	0.00	0.00	0.00
PHENOL	0.00	0.00	0.00	0.00	0.00	0.00	0.00	0.00	0.00	0.00	0.00	0.00	0.00	0.00
SO2	0.00	0.00	0.00	0.00	0.00	0.00	0.00	0.00	0.00	0.00	0.00	0.00	0.00	0.00
Total Flow lbmol/hr	7,024	7,751	11		4		3,194		546		354		82	
Total Flow lb/hr	64,965		100		35		135,162		19,968		13,791		3,546	
Total Flow cuft/hr	137,970		212		74		977,861		9,214		62,786		4,791	
Temperature F	80		80		80		80		120		93		100	
Pressure psi	297		297		297		19		329		31		75	
Vapor Frac	1		1		1		1		1		1		1	
Liquid Frac	0		0		0		0		0		0		0	
Enthalpy Btu/lb	-1,552		-1,552		-1,552		-3,651		-2,866		-3,119		-3,622	
Density lb/cuft	0.4709		0.4709		0.4709		0.1382		2.1672		0.2197		0.7402	
Average MW	9.2484		9.2484		9.2484		42.3133		36.5927		38.9362		43.4009	

5/18/2006 0:00

This page is intentionally left blank

Exhibit VIII.2-12 (cont'd) Rectisol System Estimated State Point Conditions and Compositions

SNG Option - Rectisol Acid Gas Removal Material Balance (pg. 2 of 2)

STREAM	57		58		59		60		61		62	
Description	Methanol Make-Up		Pre-Quench Bottoms		Methanol Stripper Feed		To Quench Wash		Water to Treatment		Water for Decanter	
Flow	lbmol/hr	lb/hr	lbmol/hr	lb/hr	lbmol/hr	lb/hr	lbmol/hr	lb/hr	lbmol/hr	lb/hr	lbmol/hr	lb/hr
AR	0.00	0.00	0.00	0.00	0.00	0.00	0.00	0.00	0.00	0.00	0.00	0.00
BTX	0.00	0.00	7.85	722.9	0.00	0.0	0.00	0.00	0.00	0.00	0.00	0.00
CH4	0.00	0.00	0.35	5.6	0.00	0.0	0.00	0.00	0.00	0.00	0.00	0.00
C2H4	0.00	0.00	0.02	0.6	0.00	0.0	0.00	0.00	0.00	0.00	0.00	0.00
C2H6	0.00	0.00	0.18	5.4	0.00	0.0	0.00	0.00	0.00	0.00	0.00	0.00
C3H6	0.00	0.00	0.06	2.7	0.00	0.0	0.00	0.00	0.00	0.00	0.00	0.00
C3H8	0.00	0.00	0.42	18.4	0.00	0.0	0.00	0.00	0.00	0.00	0.00	0.00
C4H8	0.00	0.00	0.22	12.1	0.00	0.0	0.00	0.00	0.00	0.00	0.00	0.00
C4H10	0.00	0.00	0.70	40.6	0.00	0.0	0.00	0.00	0.00	0.00	0.00	0.00
CH3OH	0.62	20.00	16.76	537.1	16.73	536.1	18.00	576.76	0.00	0.00	0.00	0.00
CO	0.00	0.00	0.40	11.2	0.00	0.0	0.00	0.00	0.00	0.00	0.00	0.00
CO2	0.00	0.00	77.34	3,403.7	0.00	0.0	0.00	0.00	0.00	0.00	0.00	0.00
COS	0.00	0.00	0.05	3.2	0.00	0.0	0.00	0.00	0.00	0.00	0.00	0.00
HCN	0.00	0.00	0.00	0.1	0.00	0.0	0.00	0.00	0.00	0.00	0.00	0.00
HCL	0.00	0.00	0.00	0.0	0.00	0.0	0.00	0.00	0.00	0.00	0.00	0.00
H2	0.00	0.00	0.05	0.1	0.00	0.0	0.00	0.00	0.00	0.00	0.00	0.00
H2O	0.00	0.00	26.66	480.2	41.59	749.3	0.00	0.00	40.39	727.66	15.00	270.23
H2S	0.00	0.00	1.87	63.6	0.00	0.0	0.00	0.00	0.00	0.00	0.00	0.00
MIBK	0.00	0.00	0.00	0.0	0.00	0.0	0.00	0.00	0.00	0.00	0.00	0.00
N2	0.00	0.00	0.01	0.3	0.00	0.0	0.00	0.00	0.00	0.00	0.00	0.00
NH3	0.00	0.00	0.00	0.0	0.00	0.0	0.00	0.00	0.00	0.00	0.00	0.00
O2	0.00	0.00	0.00	0.0	0.00	0.0	0.00	0.00	0.00	0.00	0.00	0.00
PHENOL	0.00	0.00	0.00	0.0	0.00	0.0	0.00	0.00	0.00	0.00	0.00	0.00
SO2	0.00	0.00	0.00	0.0	0.00	0.0	0.00	0.00	0.00	0.00	0.00	0.00
Total Flow lbmol/hr	1		133		58		18		40		15	
Total Flow lb/hr	20		5,308		1,285		577		728		270	
Total Flow cuft/hr	0		82		24		11		13		4	
Temperature F	140		-1		135		0		287		100	
Pressure psi	50		80		55		350		52		20	
Vapor Frac	0		0		0		0		0		0	
Liquid Frac	1		1		1		1		1		1	
Enthalpy Btu/lb	-3,195		-3,647		-5,308		-3,258		-6,654		-6,842	
Density lb/cuft	47.1089		64.7945		53.6425		52.9138		54.4748		61.2486	
Average MW	32.0422		39.9283		22.0390		32.0422		18.0153		18.0153	

5/18/2006 0:00

This page is intentionally left blank

Exhibit VIII.2-13 Sulfur Production (Claus) System Estimated State Point Compositions and Conditions

SNG Option - Claus Unit Material Balance

STREAM	90		91		92		93		94		95		96		97		98		99		100	
Description	Oxygen to Claus Furnace		Air to Claus Furnace		Sour Gas From Stripper		Sulfur Product		Blowdown to Water Treatment		BFW		Claus Gas Out WHB		Condensate to MP Flash		MP Steam to Header		Condensate to Flash Tank		LP Steam to Header	
Flow	lbmol/hr	lb/hr	lbmol/hr	lb/hr	lbmol/hr	lb/hr	lbmol/hr	lb/hr	lbmol/hr	lb/hr	lbmol/hr	lb/hr	lbmol/hr	lb/hr	lbmol/hr	lb/hr	lbmol/hr	lb/hr	lbmol/hr	lb/hr	lbmol/hr	lb/hr
AR	0.00	0.00	2.36	94.40	0.00	0.00	0.00	0.00	0.00	0.00	0.00	0.00	2.39	95.35	0.00	0.00	0.00	0.00	0.00	0.00	0.00	0.00
BTX	0.00	0.00	0.00	0.00	0.00	0.00	0.00	0.00	0.00	0.00	0.00	0.00	0.00	0.00	0.00	0.00	0.00	0.00	0.00	0.00	0.00	0.00
CH4	0.00	0.00	0.00	0.00	0.00	0.00	0.00	0.00	0.00	0.00	0.00	0.00	0.22	3.60	0.00	0.00	0.00	0.00	0.00	0.00	0.00	0.00
C2H4	0.00	0.00	0.00	0.00	0.00	0.00	0.00	0.00	0.00	0.00	0.00	0.00	0.00	0.00	0.00	0.00	0.00	0.00	0.00	0.00	0.00	0.00
C2H6	0.00	0.00	0.00	0.00	0.00	0.00	0.00	0.00	0.00	0.00	0.00	0.00	0.00	0.00	0.00	0.00	0.00	0.00	0.00	0.00	0.00	0.00
C3H6	0.00	0.00	0.00	0.00	0.00	0.00	0.00	0.00	0.00	0.00	0.00	0.00	0.00	0.00	0.00	0.00	0.00	0.00	0.00	0.00	0.00	0.00
C3H8	0.00	0.00	0.00	0.00	0.00	0.00	0.00	0.00	0.00	0.00	0.00	0.00	0.00	0.00	0.00	0.00	0.00	0.00	0.00	0.00	0.00	0.00
C4H8	0.00	0.00	0.00	0.00	0.00	0.00	0.00	0.00	0.00	0.00	0.00	0.00	0.00	0.00	0.00	0.00	0.00	0.00	0.00	0.00	0.00	0.00
C4H10	0.00	0.00	0.00	0.00	0.00	0.00	0.00	0.00	0.00	0.00	0.00	0.00	0.00	0.00	0.00	0.00	0.00	0.00	0.00	0.00	0.00	0.00
CH3OH	0.00	0.00	0.00	0.00	0.00	0.00	0.00	0.00	0.00	0.00	0.00	0.00	0.00	0.00	0.00	0.00	0.00	0.00	0.00	0.00	0.00	0.00
CO	0.00	0.00	0.00	0.00	0.01	0.15	0.00	0.00	0.00	0.00	0.00	0.00	1.47	41.23	0.00	0.00	0.00	0.00	0.00	0.00	0.00	0.00
CO2	0.00	0.00	0.00	0.00	4.18	184.12	0.00	0.00	0.00	0.07	0.00	0.00	312.24	13741.49	0.00	0.00	0.00	0.00	0.00	0.00	0.00	0.00
COS	0.00	0.00	0.00	0.00	0.00	0.14	0.00	0.00	0.00	0.00	0.00	0.00	1.53	91.89	0.00	0.00	0.00	0.00	0.00	0.00	0.00	0.00
HCN	0.00	0.00	0.00	0.00	0.00	0.07	0.00	0.04	0.00	0.00	0.00	0.00	0.00	0.04	0.00	0.00	0.00	0.00	0.00	0.00	0.00	0.00
HCL	0.00	0.00	0.00	0.00	0.00	0.00	0.00	0.00	0.00	0.00	0.00	0.00	0.00	0.00	0.00	0.00	0.00	0.00	0.00	0.00	0.00	0.00
H2	0.00	0.00	0.00	0.00	0.02	0.04	0.00	0.00	0.00	0.00	0.00	0.00	1.77	3.57	0.00	0.00	0.00	0.00	0.00	0.00	0.00	0.00
H2O	0.00	0.00	0.00	0.00	9.99	179.94	0.00	0.00	117.41	2115.08	765.30	13786.81	127.33	2293.79	195.12	3515.08	152.89	2754.23	158.48	2855.06	255.40	4601.04
H2S	0.00	0.00	0.00	0.00	0.34	11.60	0.00	0.00	0.00	0.02	0.00	0.00	23.13	788.34	0.00	0.00	0.00	0.00	0.00	0.00	0.00	0.00
MIBK	0.00	0.00	0.00	0.00	0.00	0.00	0.00	0.00	0.00	0.00	0.00	0.00	0.00	0.00	0.00	0.00	0.00	0.00	0.00	0.00	0.00	0.00
N2	0.09	2.58	184.32	5163.59	0.00	0.00	0.00	0.00	0.00	0.00	0.00	0.00	188.02	5267.26	0.00	0.00	0.00	0.00	0.00	0.00	0.00	0.00
NH3	0.00	0.00	0.00	0.00	3.85	65.50	0.00	0.00	0.00	0.00	0.00	0.00	0.00	0.00	0.00	0.00	0.00	0.00	0.00	0.00	0.00	0.00
O2	9.11	291.45	49.63	1587.90	0.00	0.00	0.00	0.00	0.00	0.00	0.00	0.00	0.00	0.00	0.00	0.00	0.00	0.00	0.00	0.00	0.00	0.00
PHENOL	0.00	0.00	0.00	0.00	0.00	0.00	0.00	0.00	0.00	0.00	0.00	0.00	0.00	0.00	0.00	0.00	0.00	0.00	0.00	0.00	0.00	0.00
SO2	0.00	0.00	0.00	0.00	0.00	0.00	0.00	0.00	0.00	0.00	0.00	0.00	12.37	792.55	0.00	0.00	0.00	0.00	0.00	0.00	0.00	0.00
SO3	0.00	0.00	0.00	0.00	0.00	0.00	0.00	0.00	0.00	0.00	0.00	0.00	0.00	0.00	0.00	0.00	0.00	0.00	0.00	0.00	0.00	0.00
C	0.00	0.00	0.00	0.00	0.00	0.00	0.00	0.00	0.00	0.00	0.00	0.00	0.00	0.00	0.00	0.00	0.00	0.00	0.00	0.00	0.00	0.00
S	0.00	0.00	0.00	0.00	0.00	0.00	0.00	0.00	0.00	0.00	0.00	0.00	0.00	0.00	0.00	0.00	0.00	0.00	0.00	0.00	0.00	0.00
S2	0.00	0.00	0.00	0.00	0.00	0.00	0.00	0.00	0.00	0.00	0.00	0.00	0.14	8.88	0.00	0.00	0.00	0.00	0.00	0.00	0.00	0.00
S6	0.00	0.00	0.00	0.00	0.00	0.00	0.00	0.00	0.00	0.00	0.00	0.00	2.63	505.92	0.00	0.00	0.00	0.00	0.00	0.00	0.00	0.00
S8	0.00	0.00	0.00	0.00	0.00	0.00	11.48	2944.25	0.00	0.04	0.00	0.00	5.30	1358.68	0.00	0.00	0.00	0.00	0.00	0.00	0.00	0.00
Total Flow lbmol/hr	9		236		18		11		117		765		679		195		153		158		255	
Total Flow lb/hr	294		6,846		442		2,944		2,115		13,787		24,993		3,515		2,754		2,855		4,601	
Total Flow cuft/hr	1,806		89,591		2,592		9		35		233		286,375		69		1,906		58		26,680	
Temperature F	90		60		210		312		115		242		650		468		497		494		308	
Pressure psi	30		15		35		25		21		841		28		655		665		645		75	
Vapor Frac	1.0		1.0		0.7		0.0		0.0		0.0		1.0		0.0		1.0		0.0		1	
Liquid Frac	0.0		0.0		0.3		1.0		1.0		1.0		0.0		1.0		0.0		1.0		0	
Enthalpy Btu/lb	3		-4		-4,316		53		-6,826		-6,655		-2,563		-6,416		-5,664		-6,386		-5,687	
Density lb/cuft	0.1628		0.0764		0.1703		315.9727		60.7485		59.2168		0.0873		50.6917		1.4454		49.2567		0.1725	
Average MW	31.9590		28.9697		24.0151		256.4948		18.0160		18.0153		36.8331		18.0153		18.0153		18.0153		18.0153	

5/18/2006

This page is intentionally left blank

Exhibit VIII.2-14 Waste Water Treatment System Estimated State Point Compositions and Conditions

SNG Option - Waste Water Treatment Material Balance

STREAM	110		111		112		113		114		115		116	
Description	MIBK Make Up		To MIBK Stripper		Regenerated Solvent		Tail Gas to Fired Burner		To Sour Gas Stripper		Water to Surge Tank		Steam Drum Blowdown	
Flow	lbmol/hr	lb/hr	lbmol/hr	lb/hr	lbmol/hr	lb/hr	lbmol/hr	lb/hr	lbmol/hr	lb/hr	lbmol/hr	lb/hr	lbmol/hr	lb/hr
AR	0	0	0	0	0	0	0	0	0	0	0	0	0	0
BTX	0.00	0.00	0.00	0.26	0.00	0.00	0.0000	0.0017	0.00	0.00	0	0	0	0
CH4	0.00	0.00	0.03	0.44	0.00	0.00	0.0206	0.3297	0.00	0.00	0	0	0	0
C2H4	0	0	0	0	0	0	0	0	0	0	0	0	0	0
C2H6	0	0	0	0	0	0	0	0	0	0	0	0	0	0
C3H6	0	0	0	0	0	0	0	0	0	0	0	0	0	0
C3H8	0	0	0	0	0	0	0	0	0	0	0	0	0	0
C4H8	0	0	0	0	0	0	0	0	0	0	0	0	0	0
C4H10	0	0	0	0	0	0	0	0	0	0	0	0	0	0
CH3OH	0	0	0	0	0	0	0	0	0	0	0	0	0	0
CO	0	0	0	0	0	0	0	0	0.01	0.15	0.00	0.00	0	0
CO2	0	0	0	0	0	0	0	0	4.18	184.1	0.00	0.0	0	0
COS	0	0	0	0	0	0	0	0	0.00	0.14	0.00	0.00	0	0
HCN	0	0	0	0	0	0	0	0	0.00	0.07	0.00	0.00	0	0
HCL	0	0	0	0	0	0	0	0	2.50	91.28	$2.50	$91.28	0.00	0.00
H2	0	0	0	0	0	0	0	0	0.02	0.04	0.00	0.00	0	0
H2O	0.00	0.00	0.51	9.19	0.00	0.00	0.0335	0.6044	1,295.49	23,338	1,285.50	23,158.4	189.94	3,422
H2S	0	0	0	0	0	0	0	0	0.34	11.60	0.00	0.00	0	0
MIBK	0.00	0.50	11.92	1,194.00	11.92	1,194	0.07	6.72	0.00	0.00	0.00	0.00	0	0
N2	0	0	0	0	0	0	0	0	0	0	0	0	0	0
NH3	0.00	0.00	0.01	0.09	0.00	0.00	0	0	3.85	65.6	0.01	0.1	0.00	0.00
O2	0	0	0	0	0	0	0	0	0	0	0	0	0	0
PHENOL	0.00	0.00	1.71	160.9	0.00	0.00	0	0	0.00	0.00	0.00	0.00	0	0
SO2	0	0	0	0	0	0	0	0	0	0	0	0	0	0
Total Flow lbmol/hr	0.00		14.18		11.92		0.12		1,306.40		1,288.02		189.94	
Total Flow lb/hr	0.50		1,364.91		1,194.00		7.76		23,691.69		23,250.12		3,421.73	
Total Flow cuft/hr	0.01		25.78		23.95		58.25		3,017.33		1,830.47		22,565.93	
Temperature F	100		15		65		210		67		246		394	
Pressure psi	25.0		15.0		25.0		14.9		15.0		38.0		75.0	
Vapor Frac	0		0		0		1		0		0		1	
Liquid Frac	1		1		1		0		1		1		0	
Enthalpy Btu/lb	-1,388		-1,375		-1,404		-1,557		-6,815		-6,656		-5,638	
Density lb/cuft	48.7603		52.9463		49.8557		0.1332		7.8519		12.7017		0.1516	
Average MW	100.1607		96.2804		100.1607		62.8352		18.1351		18.0511		18.0153	

5/18/2006

This page is intentionally left blank

Exhibit VIII.2-15 Steam System Estimated State Point Compositions and Conditions

SNG Option - Steam Circuit Material Balance

STREAM	150	151	152	153	154	155	156	157	158	159	160	161	162	163
Description	MIBK Stripper Steam	Steam to Stripper	Steam to MeOH Heater	MP Steam Bypass	Oxidant Heater Condensate	Flash Tank Overheads	Steam to MeOH Stripper	Steam to Rectisol Unit	Steam to WWT	Steam to Condensate Heater	Process Steam	LP BFW to WHB	Make-Up Water	LP BFW to SNG Coolers
Mass Flow lb/hr														
H2O	491	839	120	1,304	3,797	2,170	2,655	14,797	3,305	3,200	61,499	17,996	135,898	59,771
Total Flow lbmol/hr	27	47	7	72	211	120	147	821	183	178	3,414	999	7,543	3,318
Total Flow lb/hr	491	839	120	1,304	3,797	2,170	2,655	14,797	3,305	3,200	61,499	17,996	135,898	59,771
Total Flow cuft/hr	909	1,553	222	2,414	75	12,622	15,452	86,121	19,236	18,624	357,934	305	2,179	1,011
Temperature F	403	403	403	403	465	308	308	308	308	308	308	240	60	240
Pressure psi	250	250	250	250	490	75	75	75	75	75	75	25	50	150
Vapor Frac	1	1	1	1	0	1	1	1	1	1	1	0	0	0
Liquid Frac	0	0	0	0	1	0	0	0	0	0	0	1	1	1
Enthalpy Btu/lb	-5,664	-5,664	-5,664	-5,664	-6,419	-5,685	-5,684	-5,684	-5,684	-5,684	-5,684	-6,658	-6,838	-6,657
Density lb/cuft	0.5404	0.5404	0.5404	0.5404	50.7432	0.1719	0.1718	0.1718	0.1718	0.1718	0.1718	59.0795	62.3811	59.1007
Average MW	18.0153	18.0153	18.0153	18.0153	18.0153	18.0153	18.0153	18.0153	18.0153	18.0153	18.0153	18.0153	18.0153	18.0153

5/18/2006

This page is intentionally left blank

Exhibit VIII.2-16 Fired Boiler System Estimated State Point Compositions and Conditions

SNG Option - Fired Boiler Material Balance

STREAM	130		131		132		133		134	
Description	Air to Fired Boiler		Steam out Fired Boiler		Steam to Oxidant Heater		Fired Boiler Flue Gas to Stack		Boiler Feed Water	
Flow	lbmol/hr	lb/hr	lbmol/hr	lb/hr	lbmol/hr	lb/hr	lbmol/hr	lb/hr	lbmol/hr	lb/hr
AR	29	1,163	0	0	0	0	31	1,257	0.00	0
BTX	0	0	0	0	0	0	0	3	0.00	0.00
CH4	0	0	0	0	0	0	0	0	0.0	0
C2H4	0	0	0	0	0	0	0	0	0.00	0
C2H6	0	0	0	0	0	0	0	0	0.00	0.0
C3H6	0	0	0	0	0	0	0	0	0.00	0.00
C3H8	0	0	0	0	0	0	0	0	0.00	0.0
C4H8	0	0	0	0	0	0	0	0	0.00	0.00
C4H10	0	0	0	0	0	0	0	0	0.00	0.0
CH3OH	0	0	0	0	0	0	0	0	0.00	0.00
CO	0	0	0	0	0	0	0	0	0	0
CO2	0	0	0	0	0	0	3,019	132,853	0	0
COS	0	0	0	0	0	0	0	0	0.00	0.00
HCN	0	0	0	0	0	0	0	0	0.00	0.00
HCL	0	0	0	0	0	0	0	0	0.00	0.00
H2	0	0	0	0	0	0	0	0	0	0
H2O	0	0	1,111	20,022	211	3,797	158	2,847	1,111.39	20,021.69
H2S	0	0	0	0	0	0	0	0	0.00	0.00
MIBK	0	0	0	0	0	0	0	0	0.00	0.00
N2	2,271	63,616	0	0	0	0	2,459	68,888	0.0	0
NH3	0	0	0	0	0	0	0	0	0.0	0.0
O2	611	19,563	0	0	0	0	430	13,758	0.0	0.0
PHENOL	0	0	0	0	0	0	0	0	0.0	0.0
SO2	0	0	0.000	0.000	0	0	0	3	0.0	0.0
Total Flow lbmol/hr	2,911		1,111		211		6,097		1,111	
Total Flow lb/hr	84,341		20,022		3,797		219,611		20,022	
Total Flow cuft/hr	1,104,060		25,006		4,742		3,289,860		338	
Temperature F	60		680		680		280		242	
Pressure psi	14.7		510.0		510.0		14.7		900.0	
Vapor Frac	1		1		1		1		0	
Liquid Frac	0		0		0		0		1	
Enthalpy Btu/lb	-4		-5,521		-5,521		-2,354		-6,654	
Density lb/cuft	0.0764		0.8007		0.8007		0.0668		59.2266	
Average MW	28.9697		18.0153		18.0153		36.0173		18.0153	

5/18/2006

This page is intentionally left blank

Exhibit VIII.2-17 Water-Gas Shift Reaction System Estimated State Point Compositions and Conditions

SNG Option - Water-Gas Shift Material Balance (pg. 1 of 2)

STREAM	30		31		32		33		34		35		36	
Description	Steam to Shift Reactors		Syngas to Guard Bed		Guard Bed Effluent		Primary Bed Feed		Primary Bed Effluent		Secondary Bed Feed		Shifted Gas to Desaturator	
Flow	lbmol/hr	lb/hr	lbmol/hr	lb/hr	lbmol/hr	lb/hr	lbmol/hr	lb/hr	lbmol/hr	lb/hr	lbmol/hr	lb/hr	lbmol/hr	lb/hr
AR	0.00	0.00	0.01	0.3	0.01	0.3	0.01	0.29	0.01	0.29	0.01	0.29	0.01	0.29
BTX	0.00	0.0	5.82	536.67	5.82	536.67	5.82	536.67	5.82	536.67	5.82	536.67	5.82	536.67
CH4	0.00	0	334.71	5,370	334.71	5,370	334.71	5,369.75	334.71	5,369.75	334.71	5,369.75	334.71	5,369.75
C2H4	0.00	0.0	2.66	74.73	2.66	74.7	2.66	74.73	2.66	74.73	2.66	74.73	2.66	74.73
C2H6	0.00	0.0	13.25	398.4	13.25	398.4	13.25	398.44	13.25	398.44	13.25	398.44	13.25	398.44
C3H6	0.00	0.00	1.07	45.19	1.07	45.19	1.07	45.19	1.07	45.19	1.07	45.19	1.07	45.19
C3H8	0.00	0.0	5.58	246.17	5.58	246.2	5.58	246.17	5.58	246.17	5.58	246.17	5.58	246.17
C4H8	0.00	0.00	0.81	45.5	0.81	45.47	0.81	45.47	0.81	45.47	0.81	45.47	0.81	45.47
C4H10	0.00	0.0	2.18	126.53	2.18	126.5	2.18	126.53	2.18	126.53	2.18	126.53	2.18	126.53
CH3OH	0.00	0.00	0.00	0.00	0.00	0.00	0.00	0.00	0.00	0.00	0.00	0.00	0.00	0.00
CO	0.00	0	3,075.00	86,131	2,675.00	74,927	2,675.00	74,926.64	1,323.52	37,071.7	1,323.52	37,071.7	426.07	11,934.20
CO2	0.00	0	241.68	10,635.9	641.68	28,240	641.68	28,239.5	1,996.61	87,869	1,996.61	87,869	2,894.06	127,364.69
COS	0.00	0.0	3.45	207.34	3.45	207.34	3.45	207.34	0.00	0.15	0.00	0.2	0.00	0.15
HCN	0.00	0.00	1.60	43.35	1.60	43.35	1.60	43.35	1.60	43.35	1.60	43.35	1.60	43.35
HCL	0.00	0.00	0.00	0.00	0.00	0.00	0.00	0.00	0.00	0.00	0.00	0.00	0.00	0.00
H2	0.00	0	1,688.76	3,405	2,088.76	4,211	2,088.76	4,210.93	3,440.24	6,935.52	3,440.24	6,935.52	4,337.69	8,744.77
H2O	3,331.51	60,017.08	8,455.86	152,332.23	8,055.86	145,126.23	8,055.86	145,126.23	6,700.92	120,717.1	6,700.92	120,717.1	5,803.48	104,549.62
H2S	0.00	0	62.00	2,112.97	62.00	2,112.97	62.00	2,112.97	65.45	2,230.5	65.45	2,231	65.45	2,230.51
MIBK	0.00	0.00	0.00	0.00	0.00	0.00	0.00	0.00	0.00	0.00	0.00	0.00	0.00	0.00
N2	0.00	0	35.13	984	35.13	984	35.13	984.08	35.13	984	35.13	984.08	35.13	984.08
NH3	0.00	0.00	0.00	0.00	0.00	0.00	0.00	0.00	0.00	0.00	0.00	0.00	0.00	0.00
O2	0.00	0.00	0.00	0.00	0.00	0.00	0.00	0.00	0.00	0.00	0.00	0.00	0.00	0.00
PHENOL	0.00	0.00	0.00	0.00	0.00	0.00	0.00	0.00	0.00	0.00	0.00	0.00	0.00	0.00
SO2	0.00	0.00	0.00	0.00	0.00	0.00	0.00	0.00	0.00	0.00	0.00	0.00	0.00	0.00
Total Flow lbmol/hr	3,332	7,751	13,930		13,930		13,930		13,930		13,930		13,930	
Total Flow lb/hr	60,018		262,698		262,698		262,698		262,698		262,698		262,698	
Total Flow cuft/hr	74,530		526,617		556,913		484,089		581,049		469,094		407,517	
Temperature F	680		700		740		575		763		510		350	
Pressure psi	510		325		322		320		315		309		297	
Vapor Frac	1		1		1		1		1		1		1	
Liquid Frac	0		0		0		0		0		0		0	
Enthalpy Btu/lb	-5,519		-3,845		-3,845		-3,919		-3,919		-4,035		-4,165	
Density lb/cuft	0.8053		0.4988		0.4717		0.5427		0.4521		0.5600		0.6446	
Average MW	18.0153		18.8590		18.8590		18.8590		18.8590		18.8590		18.8590	

5/18/2006 0:00

This page is intentionally left blank

Exhibit 2-17 (Cont'd) Water-Gas Shift Reaction System Estimated State Point Compositions and Conditions

SNG Option - Water-Gas Shift Material Balance (pg. 2 of 2)

STREAM	37		38		39		40		41		42		43	
Description	Shifted Gas to Knock Out Drum		Shifted Gas to Rectisol Unit		Hot Water to Humidification Tower		Water Out Humidification Tower		Cold Water to Desaturator		Desaturator Water Effluent		Warm Loop Water to Heater	
Flow	lbmol/hr	lb/hr	lbmol/hr	lb/hr	lbmol/hr	lb/hr	lbmol/hr	lb/hr	lbmol/hr	lb/hr	lbmol/hr	lb/hr	lbmol/hr	lb/hr
AR	0.01	0.29	0.01	0.29	0.00	0.00	0.00	0.00	0.00	0.00	0.00	0.00	0.00	0.00
BTX	5.83	536.88	5.83	536.9	0.00	0.0	0.03	2.75	0.03	2.75	0.03	2.53	0.03	2.39
CH4	334.80	5,371.23	334.80	5,371.2	0.00	0.0	0.40	6.49	0.40	6.49	0.31	5.01	0.30	4.74
C2H4	2.67	74.76	2.67	74.8	0.00	0.0	0.01	0.15	0.01	0.15	0.00	0.11	0.00	0.11
C2H6	13.26	398.59	13.26	398.6	0.00	0.0	0.02	0.72	0.02	0.72	0.02	0.56	0.02	0.53
C3H6	1.07	45.20	1.07	45.2	0.00	0.0	0.00	0.07	0.00	0.07	0.00	0.06	0.00	0.06
C3H8	5.58	246.19	5.58	246.2	0.00	0.0	0.00	0.21	0.00	0.21	0.00	0.19	0.00	0.18
C4H8	0.81	45.47	0.81	45.5	0.00	0.0	0.00	0.03	0.00	0.03	0.00	0.03	0.00	0.03
C4H10	2.18	126.53	2.18	126.5	0.00	0.0	0.00	0.05	0.00	0.05	0.00	0.05	0.00	0.05
CH3OH	0.00	0.00	0.00	0.0	0.00	0.0	0.00	0.00	0.00	0.00	0.00	0.00	0.00	0.00
CO	426.66	11,950.77	426.66	11,950.8	0.00	0.0	0.67	18.76	0.67	18.76	0.08	2.19	0.07	2.08
CO2	2,884.55	126,946.03	2,884.45	126,941.9	0.00	0.0	1.39	61.29	1.39	61.29	10.91	479.96	10.31	453.87
COS	0.05	3.08	0.05	3.1	0.00	0.0	0.05	2.93	0.05	2.93	0.00	0.00	0.00	0.00
HCN	1.61	43.59	1.61	43.6	0.00	0.0	0.03	0.68	0.03	0.68	0.02	0.43	0.02	0.41
HCL	0.00	0.00	0.00	0.0	0.00	0.0	0.00	0.00	0.00	0.00	0.00	0.00	0.00	0.00
H2	4,337.21	8,743.81	4,337.20	8,743.8	0.00	0.0	0.45	0.90	0.45	0.90	0.93	1.87	0.88	1.77
H2O	1,009.18	18,180.32	21.83	393.3	24,978.80	449,993.1	21,602.37	389,166.70	21,602.37	389,166.70	26,396.67	475,536.01	24,961.74	449,685.75
H2S	66.84	2,278.03	66.78	2,275.8	0.00	0.0	3.31	112.96	3.31	112.96	1.92	65.45	1.82	61.89
MIBK	0.00	0.00	0.00	0.0	0.00	0.0	0.00	0.00	0.00	0.00	0.00	0.00	0.00	0.00
N2	35.13	984.13	35.13	984.1	0.00	0.0	0.01	0.26	0.01	0.26	0.01	0.22	0.01	0.21
NH3	0.00	0.00	0.00	0.0	0.00	0.0	0.00	0.00	0.00	0.00	0.00	0.00	0.00	0.00
O2	0.00	0.00	0.00	0.0	0.00	0.0	0.00	0.00	0.00	0.00	0.00	0.00	0.00	0.00
PHENOL	0.00	0.00	0.00	0.0	0.00	0.0	0.00	0.00	0.00	0.00	0.00	0.00	0.00	0.00
SO2	0.00	0.00	0.00	0.0	0.00	0.0	0.00	0.00	0.00	0.00	0.00	0.00	0.00	0.00
Total Flow lbmol/hr	9,127		8,140		24,979		21,609		21,609		26,411		24,975	
Total Flow lb/hr	175,977		158,184		450,000		389,381		389,381		476,102		450,221	
Total Flow cuft/hr	236,672		163,328		9,218		7,282		6,568		9,123		9,441	
Temperature F	255		95		420		312		150		343		414	
Pressure psi	295		293		340		340		350		375		355	
Vapor Frac	1		1		0		0		0		0		0	
Liquid Frac	0		0		1		1		1		1		1	
Enthalpy Btu/lb	-3,481		-3,299		-6,487		-6,620		-6,810		-6,580		-6,490	
Density lb/cuft	0.7435		0.9685		48.8175		53.4706		59.2843		52.1896		47.6886	
Average MW	19.2800		19.4331		18.0153		18.0196		18.0196		18.0267		18.0267	

5/18/2006 0:00

This page is intentionally left blank

Exhibit VIII.2-18 Methanation System Estimated State Point Compositions and Conditions

SNG Option - Methanation Process Material Balance (pg. 1 of 2)

STREAM	70		71		72		73		74		75		76		77		78	
Description	Steam To Methanator		Syngas to Sulfur Guard		Primary Methanator Effluent		Syngas to HRSG		Secondary Methanator Influent		Secondary Methanator Effluent		Crude SNG to Gas Coolers		SNG to TEG Unit		SNG Product	
Flow	lbmol/hr	lb/hr	lbmol/hr	lb/hr	lbmol/hr	lb/hr	lbmol/hr	lb/hr	lbmol/hr	lb/hr	lbmol/hr	lb/hr	lbmol/hr	lb/hr	lbmol/hr	lb/hr	lbmol/hr	lb/hr
AR	0.00	0.00	0.01	0.4	0.03	1.1	0.03	1.11	0.01	0.39	0.01	0.39	0.01	0.39	0.01	0.39	0.01	0.39
BTX	0.00	0.0	0.10	9.44	0.29	26.97	0.29	26.97	0.10	9.44	0.10	9.44	0.10	9.44	0.10	9.42	0.10	9.42
CH4	0.00	0	420.25	6,742	3,855.16	61,848	3,855.16	61,848.40	1,349.31	21,646.93	2,025.84	32,500.58	2,025.84	32,500.58	2,024.50	32,479.10	2,024.50	32,479.10
C2H4	0.00	0.0	1.95	54.82	5.58	156.6	5.58	156.63	1.95	54.82	1.95	54.82	1.95	54.82	1.95	54.76	1.95	54.76
C2H6	0.00	0.0	9.86	296.4	28.16	846.8	28.16	846.83	9.86	296.39	9.86	296.39	9.86	296.39	9.85	296.13	9.85	296.13
C3H6	0.00	0.00	0.20	8.26	0.56	23.60	0.56	23.60	0.20	8.26	0.20	8.26	0.20	8.26	0.20	8.25	0.20	8.25
C3H8	0.00	0.0	3.75	165.26	10.71	472.2	10.71	472.17	3.75	165.26	3.75	165.26	3.75	165.26	3.75	165.20	3.75	165.20
C4H8	0.00	0.00	0.01	0.5	0.03	1.43	0.03	1.43	0.01	0.50	0.01	0.50	0.01	0.50	0.01	0.50	0.01	0.50
C4H10	0.00	0.0	0.17	10.05	0.49	28.7	0.49	28.70	0.17	10.05	0.17	10.05	0.17	10.05	0.17	10.04	0.17	10.04
CH3OH	0.00	0.00	0.00	0.00	0.00	0.00	0.00	0.00	0.00	0.00	0.00	0.00	0.00	0.00	0.00	0.00	0.00	0.00
CO	0.00	0	1,520.55	42,591	1,689.99	47,337	1,689.99	47,336.59	591.50	16,567.8	0.76	21.3	0.76	21.30	0.76	21.30	0.76	21.30
CO2	0.00	0	86.66	3,814.0	247.61	10,897	247.61	10,897.1	86.66	3,814	0.87	38	0.87	38.14	0.86	38.06	0.86	38.06
COS	0.00	0.0	0.00	0.00	0.00	0.00	0.00	0.00	0.00	0.00	0.00	0.0	0.00	0.00	0.00	0.00	0.00	0.00
HCN	0.00	0.00	0.00	0.00	0.00	0.00	0.00	0.00	0.00	0.00	0.00	0.00	0.00	0.00	0.00	0.00	0.00	0.00
HCL	0.00	0.00	0.00	0.00	0.00	0.00	0.00	0.00	0.00	0.00	0.00	0.00	0.00	0.00	0.00	0.00	0.00	0.00
H2	0.00	0	4,933.55	9,946	6,132.55	12,363	6,132.55	12,363.22	2,146.39	4,327.13	31.00	62.49	31.00	62.49	30.99	62.48	30.99	62.48
H2O	2,403.52	43,299.32	4,292.86	77,335.89	14,919.77	268,779.66	14,919.77	268,779.66	5,221.92	94,072.9	5,984.25	107,806.3	5,984.25	107,806.26	13.81	248.74	0.00	0.00
H2S	0.00	0	0.00	0.00	0.00	0.00	0.00	0.00	0.00	0.0	0.00	0	0.00	0.00	0.00	0.00	0.00	0.00
MIBK	0.00	0.00	0.00	0.00	0.00	0.00	0.00	0.00	0.00	0.00	0.00	0.00	0.00	0.00	0.00	0.00	0.00	0.00
N2	0.00	0	47.28	1,324	135.08	3,784	135.08	3,784.04	47.28	1,324	47.28	1,324.41	47.28	1,324.41	47.27	1,324.21	47.27	1,324.21
NH3	0.00	0.00	0.00	0.00	0.00	0.00	0.00	0.00	0.00	0.00	0.00	0.00	0.00	0.00	0.00	0.00	0.00	0.00
O2	0.00	0.00	0.00	0.00	0.00	0.00	0.00	0.00	0.00	0.00	0.00	0.00	0.00	0.00	0.00	0.00	0.00	0.00
PHENOL	0.00	0.00	0.00	0.00	0.00	0.00	0.00	0.00	0.00	0.00	0.00	0.00	0.00	0.00	0.00	0.00	0.00	0.00
SO2	0.00	0.00	0.00	0.00	0.00	0.00	0.00	0.00	0.00	0.00	0.00	0.00	0.00	0.00	0.00	0.00	0.00	0.00
Total Flow lbmol/hr	2,404		11,317		27,026		27,026		9,459		8,106		8,106		2,134		2,120	
Total Flow lb/hr	43,300		142,299		406,570		406,570		142,299		142,300		142,300		34,718		34,469	
Total Flow cuft/hr	53,770		409,802		1,287,790		1,245,180		310,479		310,153		195,583		47,970		47,701	
Temperature F	680		530		822		768		410		550		371		120		120	
Pressure psi	510		292		287		284		277		274		272		269		269	
Vapor Frac	1		1		1		1		1		1		1		1		1	
Liquid Frac	0		0		0		0		0		0		0		0		0	
Enthalpy Btu/lb	-5,519		-3,575		-4,009		-4,042		-4,255		-4,610		-4,910		-1,914		-1,886	
Density lb/cuft	0.8053		0.3472		0.3157		0.3265		0.4583		0.4588		0.7276		0.7237		0.7226	
Average MW	18.0153		12.5737		15.0436		15.0436		15.0436		17.5547		17.5547		16.2672		16.2559	

5/18/2006 0:00

This page is intentionally left blank

Exhibit VIII.2-18 (Cont'd) Methanation System Estimated State Point Compositions and Conditions

SNG Option - Methanation Process Material Balance (pg. 2 of 2)

STREAM	79		80		81		82		83		84		85		86		87	
Description	TEG Vent		HP BFW From Pump		Saturated Steam to SuperHeater		Steam to HP Header		Economized LP BFW		LP Steam to LP Steam Header		Hot Water to Humidification Tower		Tower Bottoms to Surge Tank		Loop Blowdown to Treatment	
Flow	lbmol/hr	lb/hr	lbmol/hr	lb/hr	lbmol/hr	lb/hr	lbmol/hr	lb/hr	lbmol/hr	lb/hr	lbmol/hr	lb/hr	lbmol/hr	lb/hr	lbmol/hr	lb/hr	lbmol/hr	lb/hr
AR	0.00	0.00	0.00	0.00	0.00	0.00	0.00	0.00	0.00	0.00	0.00	0.00	0.00	0.00	0.00	0.00	0.00	0.00
BTX	0.00	0.00	0.00	0.0	0.00	0.0	0.00	0.00	0.00	0.00	0.00	0.00	0.00	0.00	0.00	0.00	0.00	0.01
CH4	0.00	0.00	0.00	0.0	0.00	0.0	0.00	0.00	0.00	0.00	0.00	0.00	0.00	0.00	0.01	0.22	0.44	7.14
C2H4	0.00	0.00	0.00	0.0	0.00	0.0	0.00	0.00	0.00	0.00	0.00	0.00	0.00	0.00	0.00	0.00	0.00	0.02
C2H6	0.00	0.00	0.00	0.0	0.00	0.0	0.00	0.00	0.00	0.00	0.00	0.00	0.00	0.00	0.00	0.01	0.00	0.09
C3H6	0.00	0.00	0.00	0.0	0.00	0.0	0.00	0.00	0.00	0.00	0.00	0.00	0.00	0.00	0.00	0.00	0.00	0.00
C3H8	0.00	0.00	0.00	0.0	0.00	0.0	0.00	0.00	0.00	0.00	0.00	0.00	0.00	0.00	0.00	0.00	0.00	0.02
C4H8	0.00	0.00	0.00	0.0	0.00	0.0	0.00	0.00	0.00	0.00	0.00	0.00	0.00	0.00	0.00	0.00	0.00	0.00
C4H10	0.00	0.00	0.00	0.0	0.00	0.0	0.00	0.00	0.00	0.00	0.00	0.00	0.00	0.00	0.00	0.00	0.00	0.00
CH3OH	0.00	0.00	0.00	0.0	0.00	0.0	0.00	0.00	0.00	0.00	0.00	0.00	0.00	0.00	0.00	0.00	0.00	0.00
CO	0.00	0.00	0.00	0.0	0.00	0.0	0.00	0.00	0.00	0.00	0.00	0.00	0.00	0.00	0.01	0.14	0.00	0.05
CO2	0.00	0.00	0.00	0.0	0.00	0.0	0.00	0.00	0.00	0.00	0.00	0.00	0.00	0.00	0.05	2.28	0.02	0.78
COS	0.00	0.00	0.00	0.0	0.00	0.0	0.00	0.00	0.00	0.00	0.00	0.00	0.00	0.00	0.00	0.00	0.00	0.00
HCN	0.00	0.00	0.00	0.0	0.00	0.0	0.00	0.00	0.00	0.00	0.00	0.00	0.00	0.00	0.00	0.00	0.00	0.00
HCL	0.00	0.00	0.00	0.0	0.00	0.0	0.00	0.00	0.00	0.00	0.00	0.00	0.00	0.00	0.00	0.00	0.00	0.00
H2	0.00	0.00	0.00	0.0	0.00	0.0	0.00	0.00	0.00	0.00	0.00	0.00	0.00	0.00	0.03	0.06	0.01	0.02
H2O	13.81	248.74	6,621.41	119,284.8	6,488.99	116,899.1	753.96	13,582.67	3,317.77	59,769.63	3,317.77	59,769.63	8,326.27	149,997.66	6,436.92	115,961.10	4,082.02	73,537.66
H2S	0.00	0.00	0.00	0.0	0.00	0.0	0.00	0.00	0.00	0.00	0.00	0.00	0.00	0.00	0.00	0.00	0.00	0.00
MIBK	0.00	0.00	0.00	0.0	0.00	0.0	0.00	0.00	0.00	0.00	0.00	0.00	0.00	0.00	0.00	0.00	0.00	0.00
N2	0.00	0.00	0.00	0.0	0.00	0.0	0.00	0.00	0.00	0.00	0.00	0.00	0.00	0.00	0.00	0.01	0.00	0.07
NH3	0.00	0.00	0.00	0.0	0.00	0.0	0.00	0.00	0.00	0.00	0.00	0.00	0.00	0.00	0.00	0.00	0.00	0.00
O2	0.00	0.00	0.00	0.0	0.00	0.0	0.00	0.00	0.00	0.00	0.00	0.00	0.00	0.00	0.00	0.00	0.00	0.00
PHENOL	0.00	0.00	0.00	0.0	0.00	0.0	0.00	0.00	0.00	0.00	0.00	0.00	0.00	0.00	0.00	0.00	0.00	0.00
SO2	0.00	0.00	0.00	0.0	0.00	0.0	0.00	0.00	0.00	0.00	0.00	0.00	0.00	0.00	0.00	0.00	0.00	0.00
Total Flow lbmol/hr	14		6,621		6,489		754		3,318		3,318		8,326		6,437		4,083	
Total Flow lb/hr	249		119,287		116,901		13,583		59,771		59,771		150,000		115,966		73,547	
Total Flow cuft/hr	4		2,014		89,997		16,964		1,048		343,299		3,044		1,900		1,268	
Temperature F	120		242		486		680		308		308		410		107		192	
Pressure psi	269		900		600		510		76		76		310		350		375	
Vapor Frac	0		0		1		1		0		1		0		0		0	
Liquid Frac	1		1		0		0		1		0		1		1		1	
Enthalpy Btu/lb	-6,820		-6,654		-5,663		-5,521		-6,588		-5,684		-6,500		-6,834		-6,740	
Density lb/cuft	60.5661		59.2266		1.2989		0.8007		57.0212		0.1741		49.2766		61.0217		58.0051	
Average MW	18.0153		18.0153		18.0153		18.0153		18.0153		18.0153		18.0153		18.0154		18.0152	

5/18/2006

This page is intentionally left blank

VIII.3 PLOT PLAN AND SITE LAYOUT

A conceptual general equipment arrangement and plot plan is shown in Exhibit VIII.3-1. The land requirement for the SNG Production Reference Plant is estimated to be about 11 acres not including the ASU. About 0.8 acres of this is allocated for 14 days coal and limestone storage (about 16,000 tons of coal and 500 tons of limestone). The area allocated for the gasifier process package is about 0.2 acres, and includes sufficient area for addition of a spare gasifier. An additional 2.6 acres is allocated for the ASU plant including and supporting systems.

An elevation drawing of a conceptual BGL gasification package installation containing one operating and one spare gasifier is shown in Exhibit VIII.3-2. The overall height of the structure housing the equipment, including height required for coal and limestone feed system above each gasifier and that required for slag removal system below the gasifier, is about 115 feet.

Exhibit VIII.3-1 Conceptual General Equipment Arrangement and Plot Plan of SNG Production Reference Plant

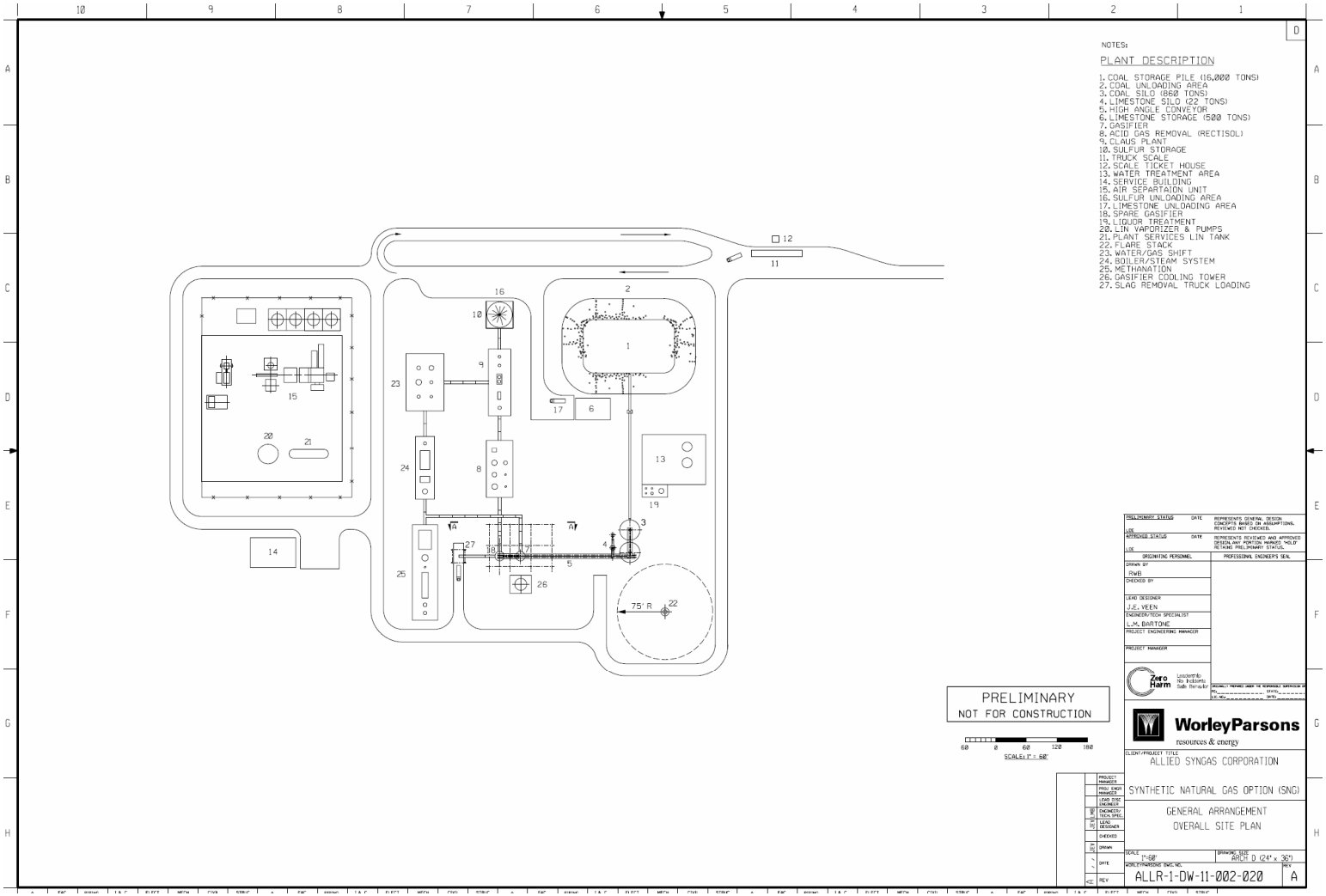

Exhibit VIII.3-2 Conceptual Elevation of Gasification Process Installation

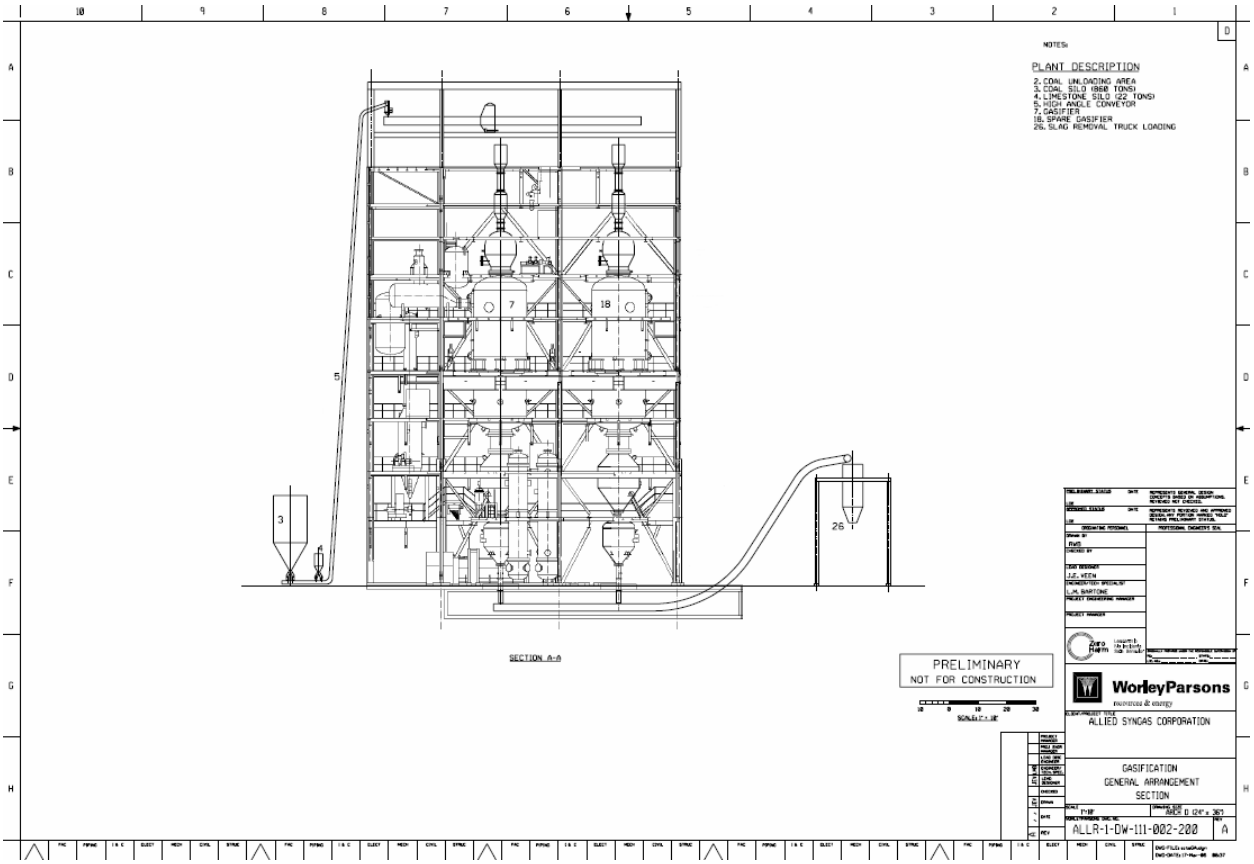

This page is intentionally left blank

VIII.4 SOLIDS HANDLING SYSTEMS DESCRIPTIONS

VIII.4.1 COAL RECEIVING, STORAGE, AND HANDLING

Illinois #6 coal, presized to ¼" x 2", is received, stored, mixed with limestone (flux), transported to the gasifier, and fed into the gasifier lock hopper. A simplified process flow diagram of the system and equipment general arrangements are shown in Exhibit VIII.4-1 and Exhibit VIII.4-2.

VIII.4.1.1 Coal Receiving and Storage

The coal receiving and storage system receives coal, meeting the specifications defined in the Design Requirements Document, from delivery trucks and stores the coal in an outdoor area for reclaim and transport to the gasifier feed system. The system is designed to receive and unload a minimum of 10 coal delivery trucks per hour (70 trucks per day). This allows for receipt of 7 days gasifier consumption at 100% load in 5 days, with unloading occurring over a 7 hour period per day. Trucks will not normally be received at night or on weekends. Coal trucks may range from a 23 ton net tri-axle up to a "Kentucky" type truck rated for 50 ton net weight. The system includes a truck scale for weighing delivery trucks entering and leaving the plant.

The outdoor coal storage area, measuring about 150 ft. by 200 ft., is sized to store about 16,000 tons of coal, sufficient to fuel the gasifier for 14 days at full operating capacity.

VIII.4.1.2 Coal Handling and Preparation System

The Coal Handling and Preparation System is designed to perform the following functions:

- Reclaim as-received coal from the coal storage area,
- Screen the coal to remove any material greater than 2" in size,
- Remove magnetic material,

- Store the prepared coal in day bins (18 hour), and
- Meter coal from the day bins to a gasifier feed conveyor.

Coal is reclaimed from the long-term storage pile by a 40 ft. long, 18 degree reclaim feeder and delivered to a vibrating screen at a rate of 250 tons per hour, as shown in Exhibit VIII.4-1. The vibrating screen separates oversized (>2") material onto an oversize conveyor that transports the oversized material to an oversized material pile. Coal meeting the top size specification is transported via a high angle conveyor to a reversible belt conveyor that distributes the coal to two, 60° cone type storage silos, each with a capacity of 430 tons. The high angle conveyor consists of two motor driven belts between which the solid material to be transported is sandwiched. An example of a Snake Sandwich High Angle Conveyor manufactured by Dos Santos International for feeding two coal silos is shown in Exhibit VIII.4-3. High angle conveyors are used to minimize the land requirement for the syngas production plant. The two silos are steel vessels each 32 feet in diameter with straight shell heights of 45 feet. The total silo capacity is sufficient for 18 hours coal consumption by the gasifier at 100% load. On its way to the silos, the coal is passed through a magnetic material separator where magnetic material is removed and dumped into a container for disposal, and is weighed via a coal scale to measure the quantity of coal being fed to the silos.

Coal is metered from each day silo by a silo discharge feeder onto one of two 100% capacity high angle gasifier feed conveyors, via a two-way diverter gate at the discharge of each silo, at a rate of about 47.7 short tons/hour.

VIII.4.2 LIMESTONE RECEIVING, STORAGE, AND HANDLING

Limestone, presized to ¼" x 3/4", is received, stored, mixed with coal, transported to the gasifier, and fed into the gasifier lock hopper. A simplified process flow diagram of the system and equipment general arrangements are also shown in Exhibit VIII.4-1 and Exhibit VIII.4-2.

VIII.4.2.1 Limestone Receiving and Storage

The limestone receiving and storage system receives limestone, meeting the specifications defined in the Design Requirements Document, from delivery trucks and stores the limestone in an outdoor area for reclaim and transport to the gasifier feed system. The system is designed to receive and unload a minimum of two, 23-ton limestone delivery trucks in a 7-hour period each day. This

allows for receipt of 7 days gasifier consumption at 100% load in 5 days. Trucks will not normally be received at night or on weekends. The limestone delivery trucks will be weighed as they enter and leave the facility via the same scales as used for weighing the coal delivery trucks.

The outdoor limestone storage area, measuring about 34 ft. by 55 ft., is sized to store about 500 tons of limestone, sufficient to fuel the gasifier for 14 days at full operating capacity.

VIII.4.2.2 Limestone Handling and Preparation System

The Limestone Handling and Preparation System is designed to perform the following functions:

- Reclaim as-received limestone from the coal storage area,
- Store the limestone in a day bin (18 hour), and
- Meter limestone from the day bin to a gasifier feed conveyor.

Limestone is reclaimed from the long-term storage via a front end loader and placed in a reclaim screw feeder hopper, as shown in Exhibit VIII.4-1. A screw feeder then transports the limestone at a rate of 10 tons per hour to a high angle conveyor that transports the limestone to a 60° cone type storage silo having a capacity of 22 tons, sufficient for 18 hours consumption by the gasifier at 100% load. An example of a Snake Sandwich High Angle Conveyor manufactured by Dos Santos International for feeding the limestone silo is shown in Exhibit VIII.4-4. The silo is a steel vessel, 8 feet in diameter with straight shell height of 12 feet.

Limestone is metered from the day silo by a silo discharge feeder onto one of two 100% capacity high angle gasifier feed conveyors, via a two-way diverter gate at the discharge of the silo, at a rate of about 1.2 tons/hr.

VIII.4.3 COAL/LIMESTONE GASIFIER DELIVERY SYSTEM

The coal and limestone gasifier delivery system conveys the coal and limestone mixture to the gasifier feed lock hopper. Coal and limestone from the day bins are transported via one of two 100% high angle gasifier feed conveyors to a 50-ton weigh hopper located above the gasifier feed lock hopper. The weigh hopper's capacity is equivalent to one hour's consumption by the gasifier at 100% load. An example of a Snake Sandwich High Angle Conveyor manufactured by Dos Santos International for feeding coal/limestone

to the weigh hopper is shown in Exhibit VIII.4-5. Approximately 7 tons of coal/limestone mixture is metered from the 50-ton weigh hopper into a 7-ton hopper located between the 50 ton weigh hopper and the gasifier. At approximately 10 minute intervals, the coal/limestone mixture in the 7-ton hopper is dumped into the gasifier feed lockhopper.

Exhibit VIII.4-1 Simplified Process Flow Diagram of Coal and Limestone Receiving, Storage, and Handling System

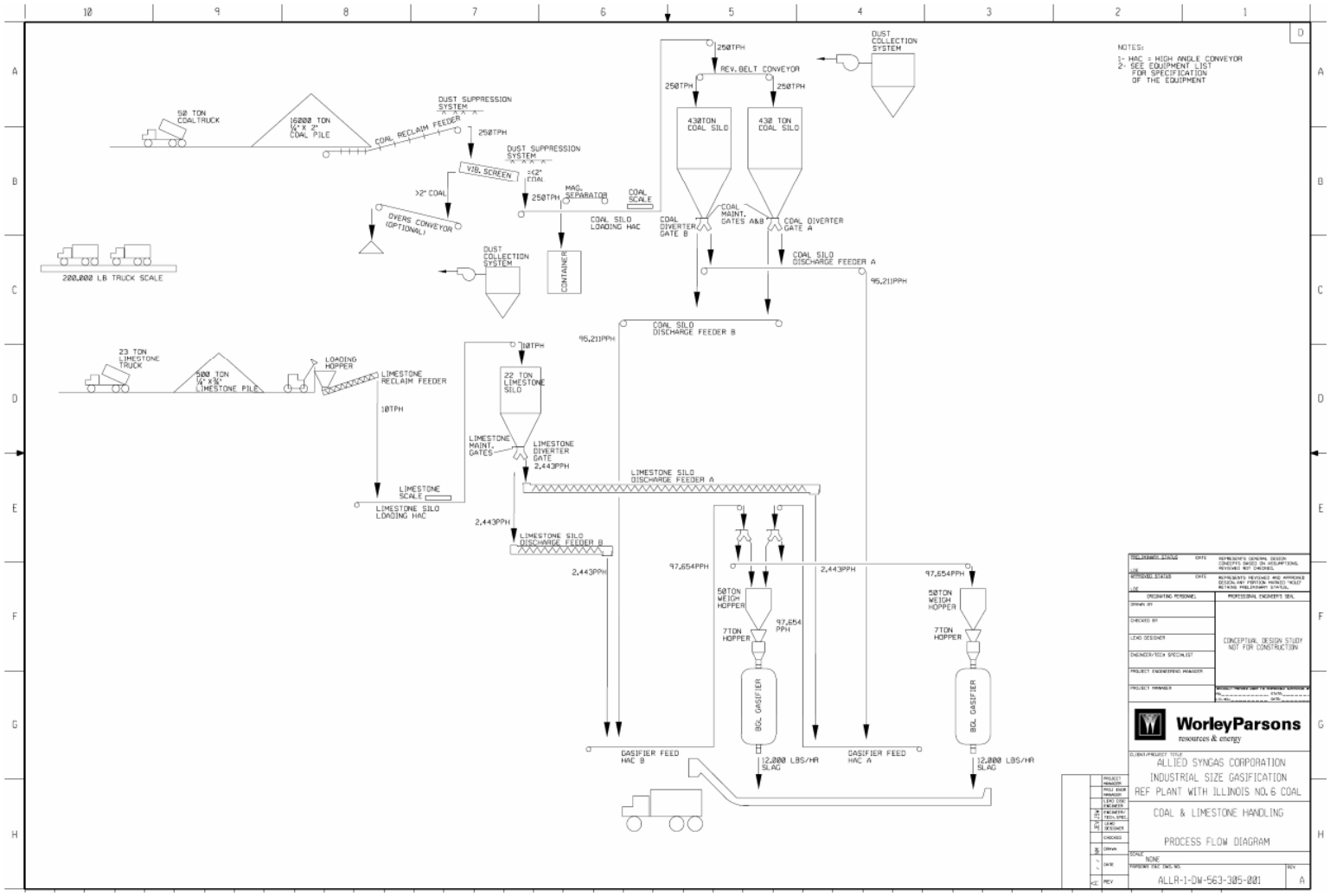

Exhibit VIII.4-2 Coal and Limestone Storage and Handling Systems General Arrangement

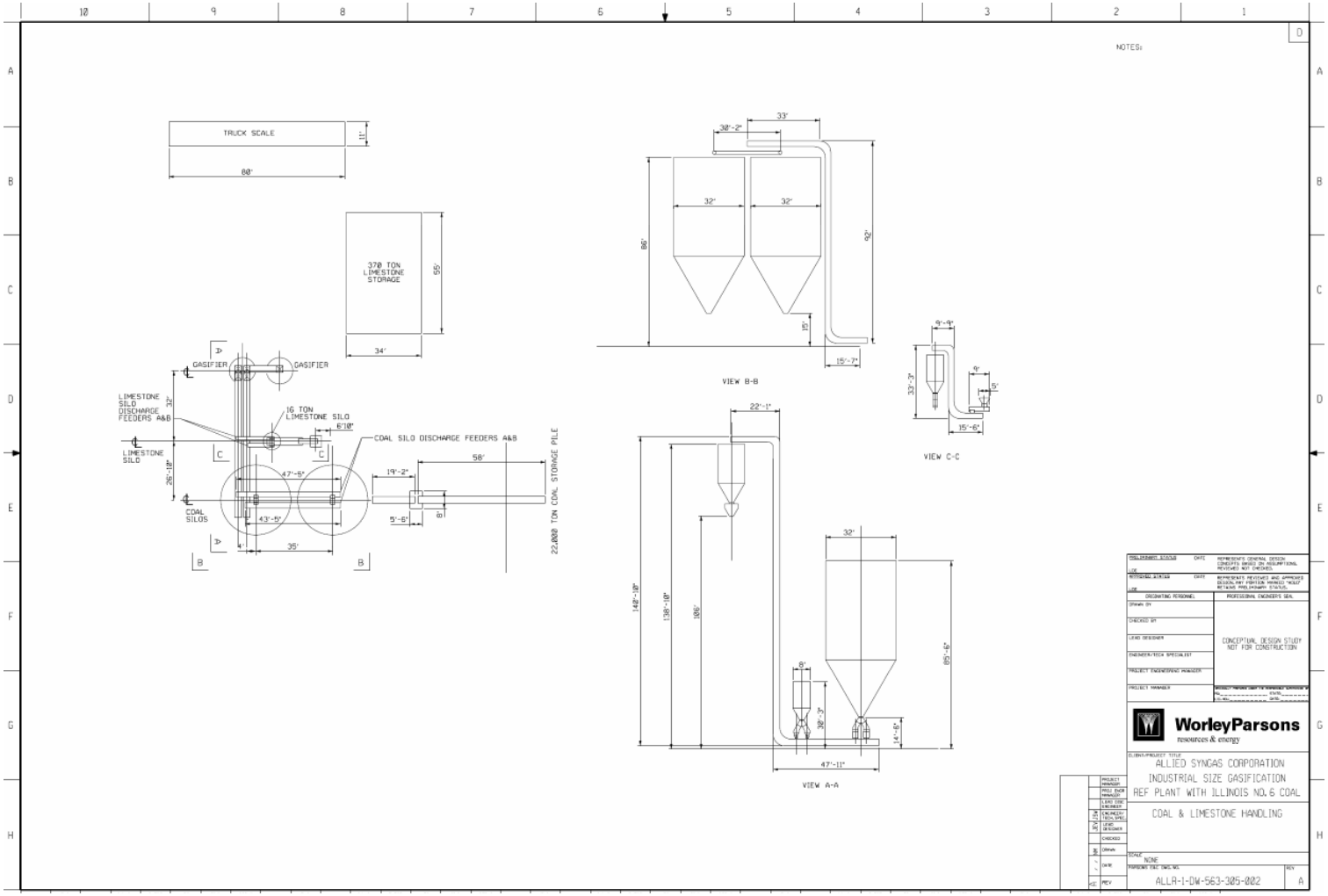

Exhibit VIII.4-3 Example of Snake Sandwich High Angle Conveyor by Dos Santos International for Feeding Coal Silos

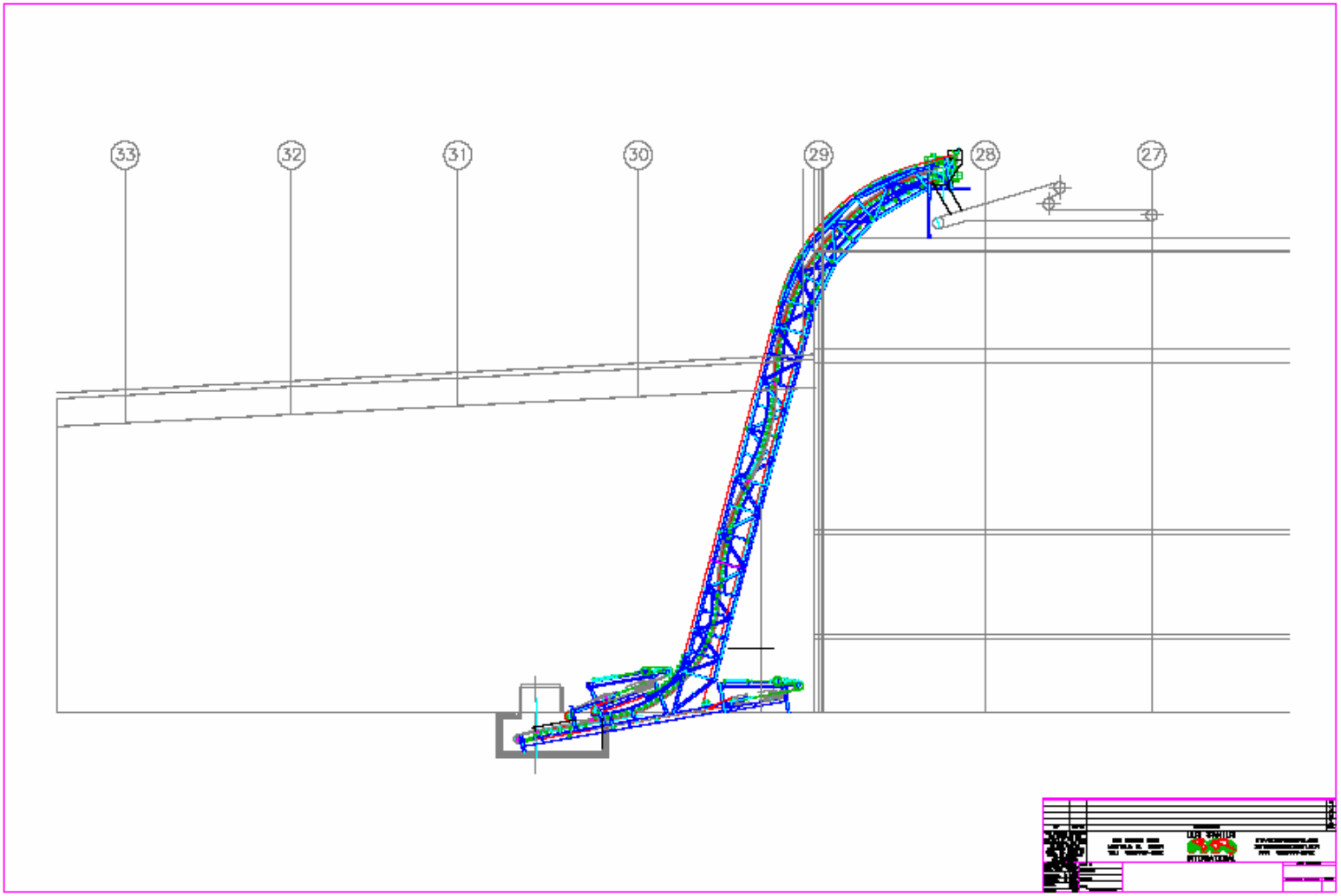

Exhibit VIII.4-4 Example of Snake Sandwich High Angle Conveyor by Dos Santos International for Feeding Limestone Silo

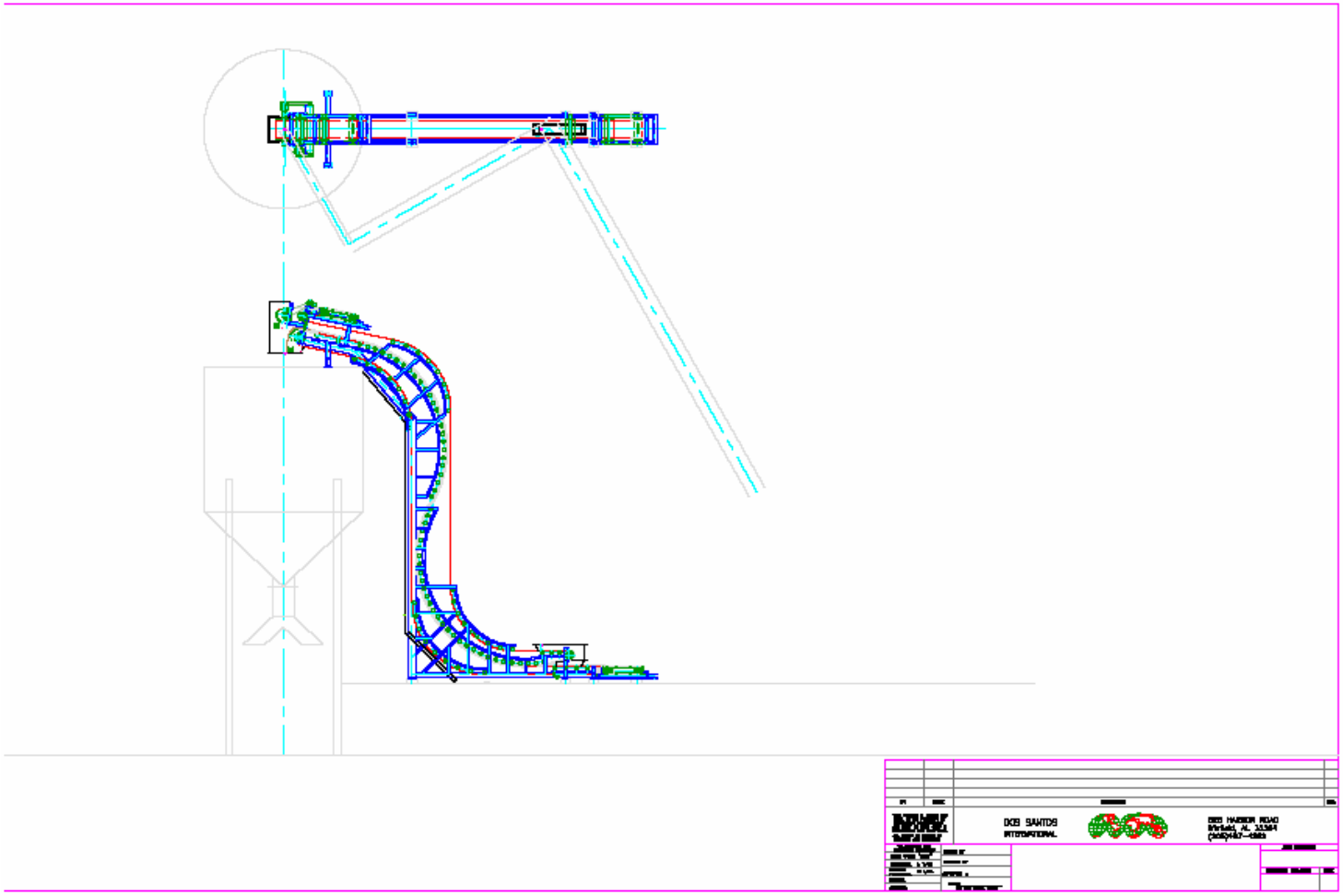

Exhibit VIII.4-5 Example of Snake Sandwich High Angle Conveyor by Dos Santos International for Feeding Coal/Limestone to Gasifier Hopper

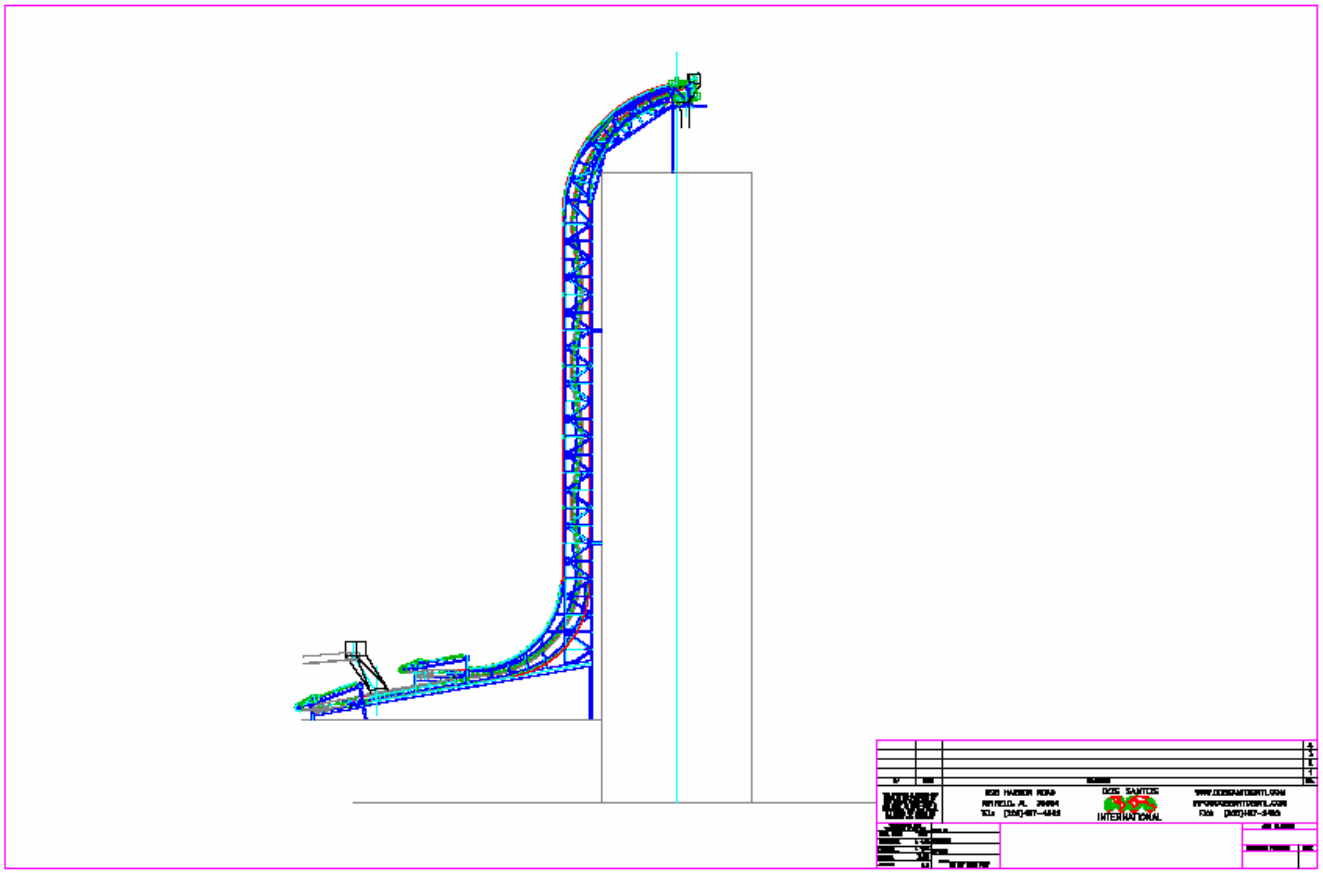

VIII.4.4 SLAG HANDLING

The slag handling system collects approximately 7 tons/hour of slag from the gasifier slag lock hopper and transports it to a storage/truck loading area for sale as a byproduct or disposal. The system consists of a water-filled trough with drag-chain conveyor that transports the slag to a truck loading station.

The system will be controlled via a stand alone PLC with DCS interface, and will be provided with instrumentation and components as required for a complete functional, reliable, and safe operating system.

VIII.5 GASIFIER PROCESS PACKAGE DESCRIPTION

The gasifier process package includes the following:

- Two gasifiers (one operating and one spare) each with coal, limestone, oxygen, steam, and nitrogen feed systems; a slag removal system; and a syngas wash cooler
- Primary syngas heat exchanger (waste heat exchanger)
- Syngas coolers
- Gas/liquor separation and tar/oil reinjection system.

Refer to the conceptual process flow diagram in Exhibit VIII.2-3 and the table in Exhibit VIII.2-11 for estimated state point compositions and conditions for the gasifier process package.

VIII.5.1 GASIFIER

The BGL gasifier is a slagging, fixed bed gasification process utilizing counter current gas/solid flow. It is designed to process about 1,145 tons/day of Illinois #6 coal. A concept sketch of the gasifier is shown in Exhibit VIII.5-1. Coal is introduced into the top of the gasifier through a feed lock. The gasification agents, steam and oxygen, are injected through the tuyeres in the lower part of the gasifier into a hot fuel bed. Gaseous reaction products ascend countercurrent to the coal. A stirrer is incorporated in the top of the gasifier when the fuel is a caking coal to ensure smooth continuous flow of coal into the gasifier.

The gasifier is designed to achieve a smooth transition of the fuel from the solid to the gaseous phase. Essentially cold solids that enter at the top of the reactor are heated by hot gases rising from the bottom. The counter-current principle results in one of the lowest oxygen consumption rates of commercial gasification processes.

Exhibit VIII.5-1 Schematic of Gasifier

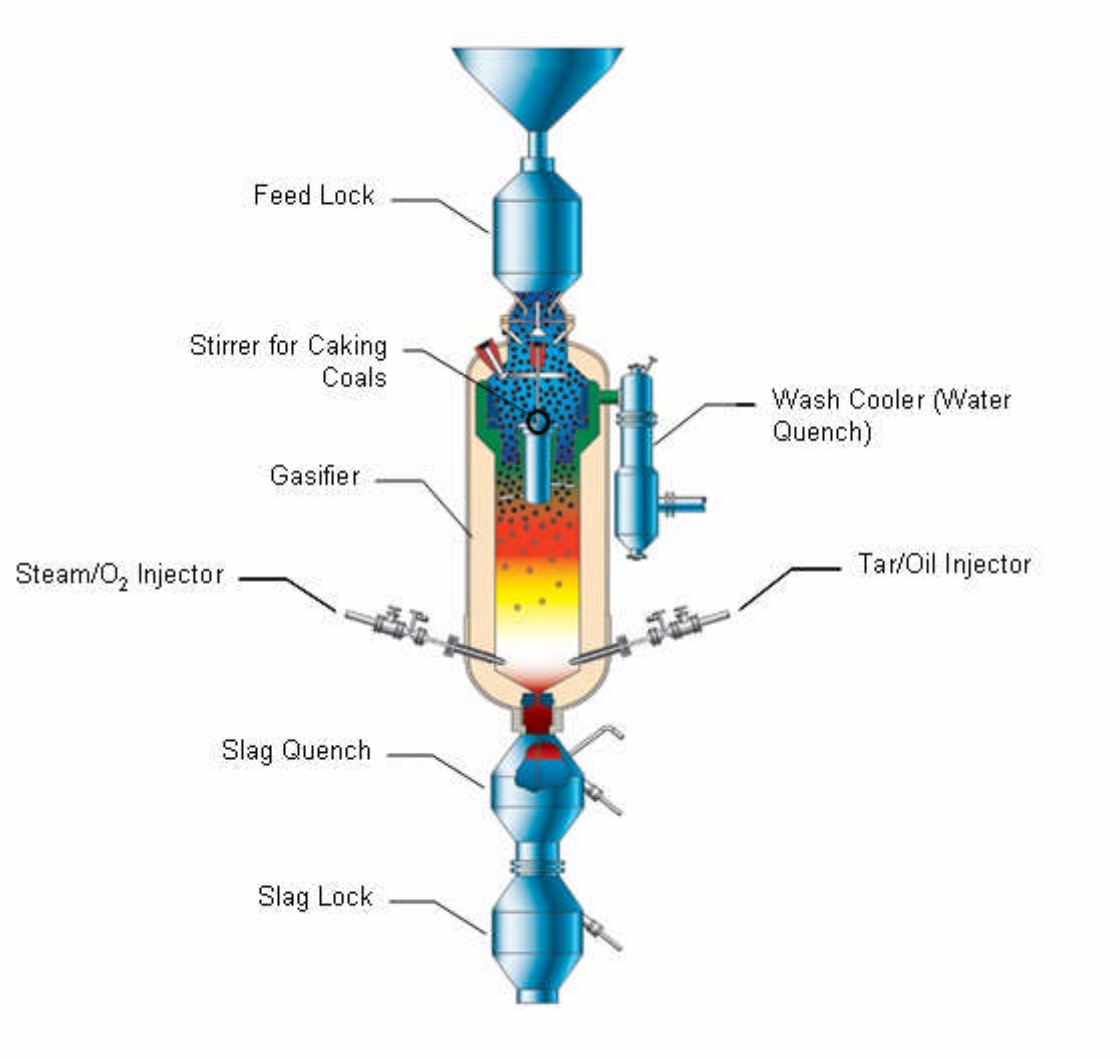

Upon further devolatilization, the coal yields a char or semi-coke that is mainly a carbon skeleton. This process is known as "char conditioning." The formation of well conditioned char within the stirred zone favors good bed behavior.

The gasifier operates at elevated pressure (about 350 psia). The elevated pressure leads to smaller main equipment dimensions and reduces effective gas volume that makes the downstream units smaller in volume and simpler in design.

Liquid slag is discharged by a tap hole arranged centrally at the bottom of the hearth into a water bath in the slag quench vessel. Through rapid cooling, the slag is converted into a solid frit that can simply be disposed of or utilized further.

The gasification media – steam and oxygen – are injected into the gasifier through water-cooled nozzles (tuyeres). Steam and oxygen react immediately with the coke from the gasification zone to form mainly hydrogen and carbon monoxide.

The upward flowing crude gas leaves the fuel bed with a low velocity so that the dust discharge with the gas is minimized.

The crude gas exiting the gasifier enters a wash cooler where the gas is washed intensely with gas liquor, quenched, and saturated with steam. Simultaneously, higher hydrocarbons (tar) condense and dust from the gas is removed. The raw gas is then routed to the first gas cooling stage (waste heat boiler).

VIII.5.2 COAL/LIMESTONE FEED SYSTEM

As mentioned previously, the gasification process is under pressure. The coal and limestone (flux) solid mixture is fed to the gasifier reactor via a feed lock operated on a batch basis, loading about 7 tons of coal/limestone mixture during each loading cycle. A limited fuel storage capacity is kept in the top of the gasifier, adding to the safety of the process as it allows the process to continue even if coal lock problems occur. The coal/limestone batch lock hopper cycling contains the following steps:

- Starting with an empty depressurized coal/limestone lock, the bottom cone valve is closed and the top cone valve is opened. Coal and limestone drop by gravity from a weigh hopper, containing only enough coal/limestone mixture to fill the lock, into the lock.
- The top cone valve is then closed and the lock is pressurized with syngas from the syngas coolers. Syngas is used instead of nitrogen for the SNG production plant to prevent dilution of the product SNG with nitrogen with a resulting reduction in heating value.
- The bottom cone valve is opened and the fuel gravitates into the gasifier. The system is designed such that for safety reasons the bottom cone valve can be opened only at an even pressure between the gasifier and lock.
- When the lock is empty, the bottom cone valve is closed automatically and the lock is depressurized. The vented syngas is routed to the fired boiler.

- The top cone valve is opened, the remaining gas is ejected and collected for use as fuel in the fired boiler.
- The cycle is then repeated.

VIII.5.3 SLAG REMOVAL SYSTEM

The slag removal system consists of a natural gas (or SNG) ring burner, slag quench tank, and slag lock. About 7 tons/hr of slag is intermittently tapped and water quenched automatically, to form a frit that is locked out of the system before being collected and transported for disposal or utilization.

To maintain temperature of the slag pool in the hearth, to prevent tap blockage, and to consume any remaining coke particles, a ring burner is installed underneath the central tap hole of the gasifier. Oxygen is used as the oxidant for the ring burner in the SNG production plant instead of air to prevent dilution of the product SNG with nitrogen with a resulting reduction in product heating value. Hot burner gases flow through the slag nozzle into the gasifier and keep the slag in the hearth. After a specific slag height has been reached, as indicated by the differential pressure, the burner is automatically switched to part load operation. The excess pressure of the quench vessel is slightly reduced (below the gasifier pressure) and the liquid slag is discharged through the slag tap into a water-filled slag quench vessel. Upon reaching the minimum slag level, the burner returns to normal operating mode and the tapping is ended. The slag level is controlled automatically via a differential pressure between the quench vessel and slag hearth.

When quenched, the slag forms a glassy granular fritted material of approximately 1/8 inch in diameter. The granular material gravitates further into the water filled slag lock. The sensible heat of the slag is removed via a cooling circuit.

The slag lock works according to the same principle as the coal/limestone lock. It is filled with water and pressurized. The slag is discharged, via a chute, onto a slag conveyor belt and transported to intermediate storage.

VIII.5.4 SYNGAS WASH COOLER

Raw gas leaves the top of the gasifier above the fuel bed at a temperature less than 1,000°F and enters the wash cooler (water quench) directly flanged to the gasifier. The raw gas is directly

quenched, cooled, and saturated by circulated gas liquor from the gas liquor separation system. The raw gas temperature is reduced to about 330°F. Simultaneously, dust carried with the gas and tar is removed from the gas.

The multi-phase flow from the wash cooler is then directed to the waste heat exchanger (primary heat exchanger).

VIII.5.5 WASTE HEAT EXCHANGER (PRIMARY HEAT EXCHANGER)

The raw gas from the wash cooler enters the primary heat exchanger and is cooled to about 311°F by transferring heat to boiler feed water and generating about 17,610 lb/hr of low pressure steam (75 psia / 309°F). A portion of the cooled gas is then directed to the water-gas shift system and a portion is sent to the syngas cooling system for further cooling for transport to the AGR system. Gas liquor and hydrocarbon condensate are discharged automatically from the sump of the heat exchanger to the gas liquor separation unit.

VIII.5.6 SYNGAS COOLING SYSTEM

Approximately 58,043 lb/hr of syngas from the primary heat exchanger is cooled via three tubular heat exchangers from about 311°F to about 95°F before the major portion of it (40,769 lb/hr) is transported to the AGR system and the remainder (4,500 lb/hr) is used for purging the gasifier feed lock. Approximately 1.0 million lb/hr of circulating water is used to cool the syngas. Gas liquor condensate from the coolers is discharged to the liquor separation process for removal of hydrocarbons and then to the liquor treatment system prior to recycling the waste water or discharging it to the environment.

VIII.5.7 GAS LIQUOR SEPARATION AND TAR/OIL REINJECTION SYSTEM

The gas liquor separation and tar/oil reinjection system removes tars and oils from the gas liquor from the primary heat exchanger (waste heat exchanger) and syngas coolers and recycles the tars/oils back to the gasifier.

The tars, oils, and solids are removed from the gas liquor by gravity separation, achievable by an adequate settling time in the tar and condensate separators, and a sufficient difference in the specific gravity between water and the tar/oil fractions. Tars and oils are collected in a liquids products tank, along with BTX from the Rectisol

AGR system and phenol from the waste water treatment system. The liquid products (about 7,965 lb/hr) are recycled from the tank to the gasifier. Phenol containing gas liquor condensate from the separation system is transported to the waste water treatment system. Sour gas from the separation system is sent to the Claus unit for sulfur recovery. Cooling water is supplied to the system from the circulating water system, and about 3,200 lb/hr of steam to heat liquor in the separation system is provided from the low pressure steam header in the steam system.

VIII.6 WATER-GAS SHIFT REACTION SYSTEM

Refer to the conceptual process flow diagrams in Exhibit VIII.2-9, and the tables in Exhibit VIII.2-17 for estimated state point composition and conditions for the water-gas shift reaction system.

The production of hydrogen from syngas can be increased if the CO present in the syngas is converted or "shifted" to H_2. This reaction is the well-known water-gas shift reaction. This reaction is exothermic and uses H_2O to convert CO to H_2 and CO_2. This reaction is easily accomplished via a fixed-bed catalytic reactor within a temperature range of 500 to 800°F. The reaction is typically carried out in a series of reactors in order to limit the temperature rise across any single reaction stage.

In the configuration presented here, syngas is shifted prior to the acid gas removal process. This approach is referred to as a "sour shift" to differentiate it from a shift process configured after the acid gas removal step (sweet shift). A sour shift takes place in the presence of H_2S and COS and uses a different catalyst composition than that of a sweet shift.

Approximately 142,060 lb/hr of particulate-free syngas from the Waste Heat Boiler is directed to a Humidification Tower. This vessel is a tray-tower where warm water is counter-currently contacted with cool syngas from the Waste Heat Exchanger. This contact serves two purposes: (1) it heats the syngas, and, (2) it saturates the syngas. Saturated syngas from the humidification tower is superheated and then steam is added such that the combined stream H_2O/CO ratio is 2.5. This steam-to-CO ratio will be enough to drive the gas shift reaction and will inhibit the formation of soot and carbonaceous material at the specified reaction temperatures.

The Guard Bed is the first in a series of three shift reactors and takes the brunt of the sulfur specie attack that slowly deactivates the shift catalyst. A relatively small amount of CO is shifted in the Guard Bed. The Primary Bed receives the cooled gas from the Guard Bed and converts additional CO to H_2. The Secondary Bed is the final of three

catalytic fixed-bed reactors. The Secondary Bed completes the shift process.

The shifted syngas, now hydrogen rich, is cooled and routed to a desaturation tower. This vessel is a trayed column designed to simultaneously cool the hydrogen rich gas as well as to retrieve as much water as possible from the shifted syngas. The recovered water then reenters the humidification loop. The 158,184 lb/hr of shifted syngas leaving the desaturation tower is combined with the 40,769 lb/hr syngas stream from the syngas coolers and is transported to the AGR process.

VIII.7 SYNGAS CLEANUP SYSTEM DESCRIPTION

The syngas cleanup system consists of an acid gas removal (AGR) system, and sulfur recovery system. The AGR system utilizes a Rectisol process to concentrate and remove sulfur in the form of H_2S and COS and trace contaminants from the syngas prior to the syngas being transported to the methanation process. The Rectisol process also efficiently removes CO_2 from the syngas. Sour gas from the Rectisol process enters a Claus process for recovery of elemental sulfur byproduct from the H_2S. The Rectisol process was selected based on results of a preliminary evaluation of commercially available AGR technologies, as discussed in the Conceptual Design Requirements Document in Section V.

Data from tests on a BGL gasification process indicate that greater than 90% of the mercury entering the system with the coal reports to the gas liquor stream, and levels below detectable limits report to the syngas. Therefore, it is not anticipated that additional mercury removal from the syngas will be required, and no mercury removal system is included in the reference plant. However, if future testing indicates that additional mercury removal is required to meet environmental criteria, this could be accomplished via an activated carbon bed upstream of the AGR system.

VIII.7.1 RECTISOL PROCESS DESCRIPTION

Refer to the conceptual process flow diagram in Exhibit VIII.2-4, and the table in Exhibit VIII.2-12 for estimated state point composition and conditions for the AGR system.

Approximately 158,184 lb/hr of syngas from the water-gas shift reaction system and 40,769 lb/hr of syngas from the syngas coolers enter an H_2S absorber after being cooled by cleaned syngas leaving the absorber. In the absorber, the raw gas is washed clean of not only H_2S and COS, but also HCN, NH_3, and BTX. The majority of the methanol is recovered in a hot regenerator and methanol

stripper. A small amount of fresh methanol is required (about 50 lb/hr)

The raw gas is first prewashed in the bottom section of the absorber and then enters the main section of the absorber via a chimney tray. Laden prewash methanol leaving the bottom of the absorber is routed to a sour flash. The sour gas from the sour flash is directed to the Claus plant. The liquid from the sour flash is sent to a stabilizer tank, where water is introduced, and then to a decanter. BTX from the decanter is transported to the liquids product tank in the gas liquor separation system for recycle back into the gasifier. The remaining liquid from the decanter is heated by low pressure steam prior to being introduced into the methanol stripper. Water from the stripper is directed to the waste water treatment system.

The sulfur-free gas leaving the absorber at the top is reheated in the raw syngas cooler. The resulting product syngas, about 64,965 lb/hr, with a sulfur concentration less than 100 ppbv, at a pressure of about 300 psia, is transported to the methanation process. About 135,160 lb/hr of CO_2 rich tailgas from the Rectisol process, along with about 100 lb/hr of sweet syngas, is used as fuel in the fired boiler to generate steam for the gasifier and oxidant heater. About 35 lb/hr of tailgas from the process is sent to the hydrogenerator in the Claus sulfur recovery unit. About 13,791 lb/hr of acid gas and 3,546 lb/hr of sour gas from the Rectisol process is also transported to the Claus sulfur recovery unit.

The laden methanol leaving the main stage of the H_2S absorber is fed to a flash regenerator for recovery of the bulk of the co-absorbed CO_2 as well as the CO and H_2 which are also co-absorbed in very small amounts. Tail gas from the Claus unit is also compressed and fed to the flash regenerator. The major portion of the gas that leaves the flash regenerator at a pressure of about 20 psia is compressed and added to the syngas from the H_2S absorber. A small amount of flashed gas is directed to the hydrogenation reactor in the Claus unit.

Methanol from the flash regenerator enters the hot regenerator for final regeneration by stripping with methanol vapor generated in a reboiler by means of low pressure steam. The acid gas leaving the top of the regenerator is cooled to recover methanol, which is recycled to the regenerator. The acid gas is then transported to the Claus unit for recovery of the sulfur in the gas. Hot regenerated methanol is pumped back to the H_2S absorber via a refrigeration cooler. Water from the methanol stripper is directed to the waste water treatment system.

Approximately 136,100 lbs/hr of cooling water required for the approximate 2.45 MMBtu/hr cooling duty in the process is supplied by the circulating water system. About 17,450 lb/hr of low pressure (75 psia) steam and 120 lb/hr of medium pressure (300 psia) steam required for the process is supplied from the low pressure and medium pressure steam headers in the steam system. Refrigerant for cooling the various flow streams is supplied by a refrigeration system requiring about 2,483 kW of electrical power. Pumping and compressor power requirements for the Rectisol process total about 3,173 kWe.

VIII.7.2 CLAUS PROCESS DESCRIPTION

Refer to the conceptual process flow diagram in Exhibit VIII.2-5 and the table in Exhibit VIII.2-13 for estimated state point composition and conditions for the sulfur recovery system.

The Claus process recovers about 99% of sulfur from the acid gas and sour gas from the Rectisol, liquor separation, and waste water treatment processes in the form of elemental sulfur. The Claus process consists of a Claus furnace and two catalytic stages. The oxidant to the Claus furnace is air enriched to about 30% oxygen by weight. The feed streams are first preheated using steam and then enter the Claus furnace where about 75% of the H_2S is reacted to SO_2. The exhaust is passed through a waste heat boiler to generate steam for the process, and the SO_2 and remaining H_2S in the exhaust is then reacted to sulfur and water in the catalytic stages. Tail gas from the process is hydrogenated and quenched in a water wash tower and then recycled to the flash regenerator in the Rectisol process. Blowdown from the process is sent to the waste water treatment system. Export steam is transported to the low pressure and high pressure steam headers, and condensate to the flash tank in the steam system. Sulfur product is condensed and collected in a sulfur pit for transport to a sulfur product storage area.

About 3,000 lb/hr of elemental sulfur byproduct is produced in the Claus system.

About 13,800lb/hr of intermediate pressure (840 psia, 240°F) boiler feed water for steam generation in the Claus process is provided from the deaerator in the steam system. About 294 lb/hr of oxygen is supplied from the ASU. Approximately 222,200 lb/hr of cooling water to provide about 4 MMBtu/hr of cooling duty in the Claus process is supplied by the circulating water system.

This page is intentionally left blank

VIII.8 METHANATION SYSTEM

Refer to the conceptual process flow diagram in Exhibit VIII.2-10, and the table in Exhibit VIII.2-18 for estimated state point composition and conditions for the methanation system.

The production of SNG requires the conversion or reaction of CO and H_2 to CH_4 and H_2O. This is referred to as methanation. There are a variety of commercially licensed methanation technologies available. The process configuration presented here is generic and is based on the recommendations of several catalyst vendors.

Approximately 64,965 lb/hr of CO_2-lean, shifted syngas from the Rectisol Unit is routed to a humidification Tower in order to raise the moisture level of the reaction gas. The humidification tower also raises the reaction gas temperature. Additional steam is added and the reaction gas stream is heated in a recuperative indirect heat exchanger. The humidification and steam addition is necessary in order to limit soot formation through Bouduard-type carbon reactions.

The reaction gas then passes through a sulfur guard bed of ZnO. The purpose of this bed is to protect the catalyst in the methanation reactors from upsets in the Rectisol Unit that would result in elevated sulfur levels in the Rectisol effluent. Under normal operating conditions it would only remove trace amounts of H_2S.

Effluent from the Sulfur Guard Bed is routed to the Primary Methanation Reactor. The temperature rise across this reactor is controlled by the introduction of cooled reaction gas recycled from the reactor effluent. The reactor itself is a tubular fixed-bed catalytic reactor. A large portion of the incoming CO is converted to CH_4.

The effluent is cooled first in a recuperative shell and tube heat exchanger and then further cooled in a Heat Recovery Steam Generator (HRSG) also referred to as a Waste Heat Boiler. Here, hot gas is cooled through the generation of steam. The steam generated from the cooling process is utilized in the methanation and

the water-gas shift reactors with the balance being routed to the high-pressure steam header.

A large amount of the cooled reaction gas exiting the HRSG is recompressed and routed back to the Primary Methanation Reactor. The balance is directed to the Secondary Methanation Reactor. The Secondary Methanation Reactor converts the remaining CO to CH_4. The Secondary Methanation Reactor is also a fixed-bed catalytic unit that is cooled through steam generation. The saturated steam is routed to the HRSG superheater where it becomes part of the HRSG steam effluent stream.

Crude SNG gas from the Secondary Methanation Reactor is first cooled by heating water for the Humidification Tower and further cooled in a series of heat exchangers consisting of low-pressure steam generation, economizing of low pressure boiler feed water, and waste heat rejection to the cooling tower. This cooling process condenses out a sizable amount of water. The condensed water is utilized in the Humidification Tower. A portion of the condensed water is rejected to Waste Water Treatment in order to control the level of condensed gas species in the water loop. The SNG product stream is further dried in a triethylene glycol desiccation unit. Approximately 34,469 lb/hr of dried SNG meeting pipeline quality gas specifications is produced.

VIII.9 WASTE WATER TREATMENT SYSTEM DESCRIPTION

The waste water treatment system treats the waste water and gas liquor condensate from the processes prior to reusing the water for slag cooling or in other processes. Refer to the conceptual process flow diagram in Exhibit VIII.2-6 and the table in Exhibit VIII.2-14 for estimated state point compositions and conditions for the waste water treatment system.

Waste water comes from the Rectisol unit (methanol stripper bottoms), Claus Unit (blowdown), methanation reactor, and waste heat exchanger steam drum blowdown. Gas liquor condensate comes from the gas liquor separation system.

Gas liquor is first introduced into an extraction column. Phenol containing condensate is sent to an MIBK stripper. Phenol from the stripper is recycled to the gasifier via the liquid products tank in the liquor separation system. Tail gas from the stripper is sent to a tail gas burner after it is cooled by cooling water to condense solvents that are recycled to the extraction column.

Dephenolated liquid from the extraction column is sent to a sour gas stripper. Sour gas from the stripper is sent to the Claus unit. Liquid from the stripper is sent to a surge tank, along with water from the Rectisol and Claus units, where calcium oxide (CaO) is added and then sent to a mixing tank where iron chloride ($FeCl_3$) is added to induce precipitation of solids. Solids (sludge) are then separated from the liquid, and the liquid is transported to a biological reactor for final cleanup. The gas from the biological reactor is vented, and the water is discharged in accordance with local regulations or reused in plant processes if it meets process specifications.

About 3,305 lb/hr of low pressure steam (75 psia) and 490 lb/hr of intermediate pressure steam are provided by the steam system for liquor heating and the MIBK stripper in the waste water treatment process. About 25,000 lb/hr of cooling water is supplied by the circulating water system for gas cooling in the process.

This page is intentionally left blank

VIII.10 PROCESS STEAM SYSTEM DESCRIPTION

The process steam system consists of a steam subsystem that collects and distributes steam from and to various processes, and a syngas-fired boiler system that generates steam for the gasifier and oxygen preheater.

VIII.10.1 STEAM SUBSYSTEM

The steam subsystem collects and supplies steam and boiler feed water to the various processes in the syngas production plant. Refer to the conceptual process flow diagram in Exhibit VIII.2-7 and the table in Exhibit VIII.2-14 for estimated state point compositions and conditions for the steam subsystem.

The system collects low pressure steam from the Claus unit (about 4,680 lb/hr), waste heat exchanger in the gasification process (about 17,610 lb/hr), and the SNG coolers (about 59,770 lb/hr) in a low pressure steam header for distribution to the Rectisol, waste water treatment, and gas liquor separation systems. The system collects intermediate pressure steam from the Claus unit (2,754 lb/hr) in an intermediate steam header that distributes intermediate pressure steam to the MIBK stripper and steam stripper in the waste water treatment system, and the methanol heater in the Rectisol system. The subsystem also collects the condensate from these processes and the oxygen preheater, adds makeup water, deaerates it, and distributes it to the waste heat exchanger, Claus unit, and syngas-fired boiler.

VIII.10.2 SYNGAS-FIRED BOILER SUBSYSTEM

Refer to the conceptual process flow diagram in Exhibit VIII.2-8 and the table in Exhibit VIII.2-16 for estimated state point compositions and conditions for the syngas-fired boiler subsystem.

The syngas-fired boiler subsystem receives boiler feed water from the steam subsystem and generates about 32,960 lb/hr of 510 psia /

680°F steam for the gasifier (29,160 lb/hr) and oxygen preheater (3,800 lb/hr) in a fired boiler. Tailgas from the Rectisol process (135,162 lb/hr), sweet syngas from the Rectisol process (100 lb/hr), and a small amount of MIBK strip gas (8 lb/hr) from the waste water treatment system provide the 37 MMBtu/hr of fuel energy to the boiler. Exhaust gas from the boiler is directed to a stack for discharge to the environment.

VIII.11 FLARE SYSTEM DESCRIPTION

An elevated flare system provides for safe combustion of syngas during gasifier start-up and system upsets. On gasifier start-up, all syngas gas from the gasifier is sent to a gasifier start-up flare until the gasification process has been stabilized on coal. A knock-out vessel removes excess liquids and solids from the gas prior to the gas being introduced into the flare to prevent plugging of the flare system and to minimize emissions during the start-up period. After the gasifier operation is stabilized, the syngas is transported to the gas cleanup system. The syngas from the gas cleanup system is sent to a separate main flare until the syngas meets specifications for the syngas conversion systems and product SNG specifications. The syngas or SNG will also be sent to the main flare system when the performance of any system treating the syngas or gas liquor becomes insufficient to continue safe operation of the system or meet SNG product quality specifications. From an economic standpoint, it is necessary to keep flaring as short as possible. From the emissions point of view, the most important aspect of the stabilization process is to ensure that desulfurization of the syngas and recovery of sulfur take place as quickly as possible.

The flare system is designed to handle the total quantity of syngas produced from the gasifier at 100% load. The height of the flares will be based on a radiant heat level not to exceed 500 Btu/hr/ft^2 at the base of the flares. For purposes of developing the conceptual layout, a flare height of 150 feet and a clear space radius of 75 ft. around the base of the flares were assumed to satisfy the requirements.

This page is intentionally left blank

VIII.12 CIRCULATING WATER SYSTEM DESCRIPTION

The circulating water system provides cooling water to the gasification process, syngas coolers, Rectisol system, Claus system, liquor separation system, water-gas shift system, methanation system, and waste water treatment system. The system consists of a plume-abated, wet-dry mechanical draft cooling tower, pumps, and piping required to remove heat from the cooling water, add makeup water, and distribute the water to the processes. The estimated circulating water requirements for the processes are shown in Exhibit VIII.12-1. The estimated total cooling load is about 159.4 MMBtu/hr.

Exhibit VIII.12-1 Estimated Circulated Cooling Water Requirements

PROCESS	FLOW RATE	SUPPLY TEMPERATURE	RETURN TEMPERATURE
Gasification (incl. syngas coolers)	1,083,333 lb/hr	69°F	87°F
Rectisol	136,111 lb/hr	69°F	87°F
Claus	222,222 lb/hr	69°F	87°F
Water-Gas Shift	6,111,111 lb/hr	69°F	87°F
Methanation	1,277,780 lb/hr	69°F	87°F
Waste Water Treatment	25,000 lb/hr	69°F	87°F
Total	8,855,557 lb/hr		

This page is intentionally left blank

VIII.13 PROCESS WATER SUPPLY SYSTEM

The process water supply system provides demineralized makeup water to the AGR (Rectisol), steam, and circulating water systems. The system also provides water for slag cooling from the waste water treatment system. The estimated process makeup water requirements are shown in Exhibit VIII.13-1. A detailed optimization study of water recycling in the plant was not performed. The estimates for makeup water required do take into account use of water from the waste water treatment system for slag quenching.

Exhibit VIII.13-1 Estimated Process Makeup Water Requirements

PROCESS	FLOW RATE
AGR (Rectisol) System	270 lb/hr
Steam System	135,890 lb/hr
Circulating Water System	131,940 lb/hr
Total	268,100 lb/hr

This page is intentionally left blank

VIII.14 INSTRUMENTATION AND CONTROL SYSTEM DESCRIPTION

The instrumentation and control system consists of the equipment required to control the syngas production related processes in a safe and efficient manner. The plant systems will each be controlled by separate digital control systems (DCS) integrated with an overall plant DCS.

This page is intentionally left blank

VIII.15 ELECTRICAL SYSTEM DESCRIPTION

The electrical system consists of the equipment necessary to receive and distribute power to the electrically driven components in the syngas production plant and building support systems. It includes station service equipment, switchgear and motor control centers, conduit and cable trays, wire and cables, protective equipment (grounding, cathodic protection, etc.), and standby equipment. The anticipated total electrical power required for the syngas production plant is 8,804 kWe. A breakdown of electrical power requirements for major systems is shown in Exhibit VIII.15-1.

Exhibit VIII.15-1 Estimated Electric Power Requirements Summary

SYSTEM	KWE
Gasification	600
Material Handling	208
Circulating Water	365
Rectisol	5,656
Claus	186
Wastewater Treatment	373
Steam System	209
Water-Gas Shift	75
Methanation	1132
Total	8,804

This page is intentionally left blank

VIII.16 AIR SEPARATION UNIT DESCRIPTION

In this syngas production plant option, about 580 tons/day of 99.5% oxygen for the gasifier, slag tap burner, and Claus furnace at about 517 psia will be purchased across-the-fence from a gas supplier. The type of ASU will be selected by the gas supplier based on the oxygen and nitrogen requirements, and availability requirement, of the syngas production plant. Utilities for the ASU will be the responsibility of the gas supplier. It is anticipated that these utilities will include about 9,700 kWe of electric power and about 3,200 gpm of circulating water for cooling.

This page is intentionally left blank

VIII.17 CAPITAL AND O&M COST ESTIMATES

This section describes the approach and results of evaluating the expected cost of the SNG Production Reference Plant using Illinois #6 coal.

VIII.17.1 COST ESTIMATING APPROACH

The approach to capital cost development is a combination of WorleyParsons estimates of selected specific major systems to supplement the costs from an in-house BGL gasifier cost model that develops capital costs for an entire IGCC power plant. The format includes separate evaluation of major systems and sub-systems for the entire plant. These costs are determined with several levels of complexity depending on the specific system being estimated. The capital cost at the level of Total Field Cost includes equipment, materials, and installation labor.

The resulting capital cost is provided on an estimate form that recognizes each cost account for the plant. Since this study is limited to the production of SNG, a number of the model cost accounts do not have an estimated value. Each account in the SNG estimate contains separate costs for equipment, materials, and installation labor. These costs comprise the Total Field Cost (TFC), also referred to as the Bare Erected Cost (BEC). The Total Capital Cost consists of equipment and material costs, direct and indirect labor costs, engineering costs, other costs and contingencies for the total SNG production project. The estimate does not include escalation, financing costs or any additional costs that would be the responsibility of the plant owner. The model helps assure that plant estimates are consistently evaluated and that all relevant process scope is included. When more than one case is evaluated, this approach produces costs that indicate normalized and unbiased results that reflect generic differences.

The cost of plant operating and maintenance is included for the Reference Plant. These costs were developed on an average

annual cost basis. This operating and maintenance cost estimate includes the following:

- Fuel cost
- Fixed Operating Cost
  - Operating labor
  - Maintenance labor and Material
  - Administrative and support labor
- Variable, non-fuel operating costs
  - Consumables
  - Waste disposal
- Other operating costs (By-Products)

VIII.17.2 COST BASIS AND ASSUMPTIONS

VIII.17.2.1 Capital Cost Basis and Assumptions

The following are the basis for the capital costs:

- Construction performed by Gulf Coast non-union labor.
- Coal will be delivered to the site by truck.
- A separate unloading facility is included for the limestone (flux) supply.
- Slag waste will be trucked to an unspecified off-site slag disposal area.
- Cost estimate scope is based on study performance summary, heat and material balance data, conceptual site arrangement, and system design descriptions presented in previous sections.
- Cost estimate is in constant June 2005 dollars.
- Estimate for coal and limestone handling systems is based on an in-house conceptual estimate of plant specific material handling scope. The cost does include vendor furnished budgetary costs for over 80% of the equipment cost.
- The estimates for the gas cleanup system, water-gas shift system, methanation system, and waste water treatment system were prepared by WorleyParsons. These estimates were developed on the basis of engineering defined equipment lists

that defined each of the major components for each system. The costs were based on a US Gulf Coast basis.

- The estimate for the gasifier system is based on the in-house BGL IGCC cost model utilized for previous IGCC evaluations, and includes the cost of a spare gasifier with feed lock, gas water wash vessel, slag quench vessel, and slag lock.
- Model costs are adjusted to the common June 2005 basis using Chemical Engineering Indices. Indices generally reflect the recent actual increases in steel price. However, the steel commodity prices are very volatile and significant changes occur on a monthly basis. Depending on the perceived long-term impact of these changes, special consideration of the impact is necessary.
- Construction of the project is based on the owner purchasing equipment, retaining the services of an engineering/design/construction manager firm and executing construction with multiple contracts.
- Construction cost is based on a 40 hour workweek with spot overtime.
- Equipment costs are based on use of United States equipment vendors.
- Contingency was evaluated with varying rates for each estimate line item depending on the risk for cost growth. The resulting contingency rate for each estimate is the weighted composite value.
- Estimate includes the following:
    - SNG plant battery limits
    - All identified process equipment necessary for the production of SNG
    - Wet/Dry cooling tower and circulating water system
    - Auxiliary transformer, switchgear and MCC's to support the plant auxiliary power load
    - DCS system for plant control
    - Miscellaneous systems and equipment necessary to support the major process systems
    - Site development and buildings
    - Professional services for the engineering & design of the SNG balance of plant.

- Professional services for construction management of the SNG production plant.
- Professional services and craft labor in support of plant startup but not the costs of owner's plant startup.
- An allowance for startup spare parts but not the cost of initial spare part inventory.
- An allowance for Builders Risk and General Liability Insurance

♦ Estimates do not include the following:

- Capital cost for the air separation unit (the facility is considered to be off-site and the cost of oxygen and nitrogen are recognized in the annual O&M cost estimate and include the impact of utility costs).
- Sales tax
- Escalation
- Owners costs such as for licenses, permits, land, etc.

VIII.17.2.2 Operating and Maintenance Cost Basis and Assumptions

Annual Operating and Maintenance (O&M) costs are based on and include the following:

♦ O&M estimate is the average annual cost.

♦ Evaluation Annual Plant Capacity factor is 95%.

♦ Cost of fuel is included.

♦ Average operator labor rate is $32.00

♦ Operator labor burden is 30% of base labor, and Overhead charge is 25% of all plant labor.

♦ Average annual maintenance material and labor

♦ Consumables costs are based on the expected full load consumption (resulting costs are adjusted for the stated plant capacity factor) and corresponding unit costs for the following:

- Water Makeup
- Water Treatment Chemicals
- Flux (limestone)
- Oxygen

- Methanol
- Natural Gas
- Nitrogen
- Waste Disposal
- Sulfur By-Product Credit

VIII.17.2.3 Results

VIII.17.2.3.1 Total Indicative Price

A summary of the capital cost estimate is shown in Exhibit VIII.17-1. The total capital cost of the SNG production plant is estimated to be $147.1 million, about $7,740/MMBtu/day of SNG product. The estimated capital cost does not include financing, escalation, or owner's costs, as noted in the capital cost basis and assumptions in Section VIII.17.2.1.

VIII.17.2.3.2 Annual Operating and Maintenance Costs

The estimated annual O&M costs, excluding annualized capital costs, are summarized in Exhibit VIII.17-2. The annual fixed operating costs are estimated to be about $6.2 million, or about $327/MMBtu/day of SNG product based on an SNG production rate of about 791 MMBtu/hr (HHV). The annual non-fuel variable operating costs are estimated to total about $13.9 million, about $2.12/MMBtu of SNG product based on a plant capacity factor of 95%. The annual fuel operating cost is estimated to be $13.1 million, or about $1.99/MMBtu of SNG product. The total annual variable operating cost, including fuel cost, is thus estimated to be about $4.11/MMBtu of SNG. If the unit fixed annual operating cost is put on an annual SNG production basis at 95% capacity factor, then the estimated total annual operating cost, fixed and variable, is about $5.05/MMBtu.

Exhibit VIII.17-1 Summary of Capital Cost Estimate

INDICATIVE PRICING

CLIENT: DOE
PROJECT: Industrial Size Gasification
CASE: BGL 1000 SNG w/ Tar Recycle & Spare-III#6

7/7/2006 Cost Base (Jun.) 2005

Prepared by: G. Hinds Checked by:L. L. Pinkerton

CODE	ITEM		EQUIPMENT	MATERIAL	LABOR	TOTAL	COMMENTS
							18,990 MMBtu/day
1.0	Coal & Sorbent Handling		$ 913,985	$ 111,057	$ 404,090	$ 1,429,132	Coal & Flux Receiving & Reclaim
2.0	Coal & Sorbent Prep & Feed		$ 1,628,788	$ 128,284	$ 600,765	$ 2,357,837	Coal & Flux Storage & Feed to Gasifier
3.0	Misc. BOP Systems		$ 821,093	$ 473,326	$ 549,621	$ 1,844,039	
4.0	Gasifier & Accessories		$ 18,132,336	$ 642,216	$ 11,367,299	$ 30,141,850	Gasifier, Gas Cooling, Slag Quench, Tar Separation
4.0	ASU Plant		$ -	$ -	$ -	$ -	Off-Site (see O&M)
5.0	Gas Cleanup		$ 27,955,630	$ 10,823,257	$ 16,078,157	$ 54,857,045	Rectisol, Claus, Gas Liquor Treating & Methanation
5.0	CO2 Removal & Compression		$ -	$ -	$ -	$ -	
6.0	Combustion Turbine Plant		$ -	$ -	$ -	$ -	
7.0	HRSG, Ducting & Stack		$ -	$ -	$ -	$ -	
8.0	Steam Turbine Generator		$ -	$ 186,871	$ 113,187	$ 300,058	Steam Piping System
9.0	Cooling Water System		$ 1,538,647	$ 950,136	$ 783,482	$ 3,272,266	Cooling Tower Cooling & Component Cooling
10.0	Ash Handling System		$ 804,136	$ 294,871	$ 312,194	$ 1,411,202	Slag Conveyor & Truck Feed
11.0	Accessory Electric Plant		$ 2,167,816	$ 1,043,701	$ 2,002,151	$ 5,213,669	
12.0	Instrumentation & Control		$ 2,445,502	$ 276,391	$ 951,747	$ 3,673,640	
13.0	Improvements to Site		$ 217,145	$ 255,977	$ 568,091	$ 1,041,213	
14.0	Buildings & Structures		$ -	$ 983,697	$ 628,015	$ 1,611,712	
	TOTAL FIELD COST		$ 56,625,078	$ 16,169,784	$ 34,358,800	$ 107,153,662	
	PROFESSIONAL SERVICES:		$ 10,715,400	$ -	$ -	$ 10,715,400	Includes Engineering, Design & CM
	OTHER COSTS (LESS Escalation)		$ 5,600,000	$ -	$ 200,000	$ 5,800,000	Freight, Heavy Haul, Startup Spares & Insurances
	ESCALATION		$ -	$ -	$ -	$ -	Excluded
							$/MMBtu/day
	TOTAL (w/o CONTINGENCY)		$ 72,940,478	$ 16,169,784	$ 34,558,800	$ 123,669,062	6,510
	CONTINGENCY					$ 23,404,037	
							$/MMBtu/day
	TOTAL					$ 147,073,099	7,740

Exhibit VIII.17-2 Estimated Annual O&M Costs

INITIAL & ANNUAL O&M EXPENSES

BGL 1000 SNG w/ Tar Recycle & Spare-III#6					Cost Base (Jun.)	2005
					Heat Rate-net(Btu/kWh):	
Plant Output:	SNG (MMBtu)	791.3	Hydrogen (mmscfd)	0	MWe-net:	0.0
					Capacity Factor: (%):	95

OPERATING & MAINTENANCE LABOR

Operating Labor		
Operating Labor Rate(base):	32.00	$/hour
Operating Labor Burden:	30.00	% of base
Labor O-H Charge Rate:	25.00	% of labor

Operating Labor Requirements(O.J.)per Shift:	1 unit/mod.	Total Plant
Skilled Operator	2.0	2.0
Operator	5.0	5.0
Foreman	1.0	1.0
Lab Tech's, etc.	1.0	1.0
TOTAL-O.J.'s	9.0	9.0

	Annual Cost $	Annual Unit Cost $/MMBtu
Annual Operating Labor Cost	$3,279,744	0.498
Maintenance Labor Cost	$1,689,151	0.257
Administrative & Support Labor	$1,242,224	0.189
TOTAL FIXED OPERATING COSTS	**$6,211,119**	**0.943**

VARIABLE OPERATING COSTS

						$/MMBtu
Maintenance Material Cost					$2,533,727	0.385
Consumables	Consumption Initial	Consumption /Day	Unit Cost	Initial Cost		
Water(/1000 gallons)		772	0.43		$114,859	0.017
Chemicals						
MU & WT Chem.(lb.)	68,976	2,299	0.16	$10,741	$124,150	0.019
Carbon (Mercury Removal) (lb.)			6.50			
COS Catalyst (lb)			0.60			
Water Gas Shift Catalysts	400	0.5	475.00	$190,000	$90,188	0.014
SNG Catalysts	740	0.7	570.00	$421,800	$133,479	0.020
Flux (limestone-ton)	879	29.3	20.00	$17,582	$203,223	0.031
O2 (ton)		583.5	34.50		$6,980,050	1.060
Methanol (ton)	18	0.6	282.00	$5,076	$58,670	0.009
Subtotal Chemicals				$645,200	$7,589,761	1.153
Other						
Supplemental Fuel(mmBtu)		75.4	7.00		$183,060	0.028
Auxiliary Power (MW/hr)		211.3	40.00		$2,930,731	0.445
Subtotal Other					$3,113,791	0.473
Subtotal-Other						
Waste Disposal						
Spent Mercury Catalyst (lb.)			0.25			
Flyash (ton)						
Bottom Ash/Slag (ton)		165.4	16.00		$917,883	0.139
Subtotal-Waste Disposal					$917,883	0.139
By-products & Emissions						
Sulfur(tons)		35.3	25.00		($306,250)	-0.047
Subtotal By-Products					($306,250)	-0.047
TOTAL VARIABLE OPERATING COSTS					**$13,963,772**	**2.120**
Fuel(ton)	34,347	1,145	33.00	$1,133,458	**$13,100,886**	**1.989**

This page is intentionally left blank

VIII.18 CONCLUSION

A conceptual design and cost estimate of an SNG Production Reference Plant using a single operating BGL 1000 Gasifier and one spare gasifier were developed. The syngas cleanup system consists of a Rectisol process for removal of sulfur and other contaminants from the syngas and a Claus process for converting H_2S in the syngas to elemental sulfur. A sour water-gas shift reaction system converts CO in a portion of the syngas to H_2 to provide the appropriate hydrogen to carbon ratio for a methanation process. The estimated performance characteristics of the plant are as follows:

- Coal Consumption: 95,409 lb/hr
- Coal Thermal Input (HHV): 1,118 MMBtu/hr
- Limestone Consumption: 2,442 lb/hr
- Oxygen Consumption: 48,347 lb/hr
- Net Electric Power Consumption: 8,804 kWe
- Exported SNG Product: 34,469 lb/hr (0.8 million scf/hr)
  770 MMBtu/hr
- SNG Higher Heating Value: 22,956 Btu/lb (985 Btu/scf)
- SNG Lower Heating Value: 20,670 Btu/lb (885 Btu/scf)
- Elemental Sulfur Co-product: 2,944 lb/hr
- Net SNG Production Plant Thermal Efficiency: 58.8%
- Slag Production: 13,787 lb/hr

The study was based on purchase of oxygen from a gas supplier who owns and operates an ASU on-site. The gas supplier is responsible for utilities for the ASU. For the capacity required for the syngas production plant, the electric power consumption of the ASU is estimated by a supplier to be about 9,700 kWe.

The capital cost of the SNG Production Reference Plant is estimated to total about $147.1 million in June 2005 dollars, about

$7,740/MMBtu/day of SNG product, including professional services and contingency, but not including owner's costs. The annual fixed O&M cost is estimated to be about $6.2 million ($327/MMBtu/day of product). The annual variable O&M cost is estimated to total about $26.8 million (about $4.08/MMBtu of SNG product, with the non-fuel variable O&M cost portion being about $13.7 million, or $2.09/MMBtu of SNG product, and the fuel cost portion being about $13.1 million, or about $1.99/MMBtu or SNG product.

VIII.19 MAJOR EQUIPMENT LIST

VIII.19.1 GASIFIER PROCESS PACKAGE

Coal / Limestone Feed Lock
Quantity 2
Carbon Steel
Nominal vessel diameter: 8 ft.
Nominal vessel height: 16 ft.
Nominal pressure: 500 psia

Gasifier
Quantity 2
Carbon Steel, Jacketed Shell
Nominal shell diameter: 14 ft.
Nominal height: 44 ft.
Nominal pressure: 500 psia
Refractory
Oxygen/Steam Injector
Tar/oil injector

Slag Quench Vessel
Quantity 2
Carbon Steel Vessel
Nominal vessel diameter: 12 ft.
Nominal vessel height: 17 ft.
Nominal pressure: 500 psia

Slag Lock
Quantity 2
Carbon Steel Vessel
Nominal vessel diameter: 9 ft.
Nominal vessel height: 14 ft.
Nominal pressure: 500 psia

Wash Cooler
Quantity 2
Nominal diameter: 6 ft.
Nominal height: 20 ft.

Waste Heat Exchanger (Primary HX)
Quantity 1
Nominal pressure: 500 psia
Temperature: 300°F – 400°F
Outlet steam pressure: 75 psia
Outlet steam temperature: 308°F
Duty: 0.17 MMBtu/hr

Syngas Cooling System
Quantity 1
Shell and tube (gas tubeside)
Nominal pressure: 340 psia
Temperature: 95°F – 315°F
- Syngas Cooler 1
- Syngas Cooler 2
- Syngas Cooler 3

Liquor Separation and Tar Recycle System
Quantity 1
- Liquor Coolers
- Tar Separator
- Condensate Separator
- Liquid Products Tank

VIII.19.2 WASTE WATER TREATMENT SYSTEM

Towers

Solvent Extraction Column

Type	Agitated column
Quantity	1
Diameter	2 ft, 6 inch
Height	30 ft
Number of Trays	20
Pressure	30 psia
Temperature	150 F
Materials of Construction	316 Stainless

Solvent Recovery Column

Type	Packed column
Quantity	1
Diameter	2 ft, 4 inch
Height	30 ft
Number of Trays	15
Pressure	30 psia
Temperature	500 F
Materials of Construction	316 Stainless

Sour Gas Scrubber

Type	Packed column
Quantity	1
Diameter	2 ft
Height	30 ft
Number of Trays	15
Pressure	50 psia
Temperature	300 F
Materials of Construction	316 Stainless

Process Reactors

Biological Reactor

Type	Vertical
Quantity	1
Diameter	16 ft
Height	20 ft
Pressure	15 psia
Temperature	100 F
Materials of Construction	Rubber-lined carbon steel

Tanks

Clean Solvent Storage Tank

Type	Horizontal
Quantity	1
Diameter	3 ft
Length	9 ft
Pressure	20 psia
Temperature	200 F
Materials of Construction	Carbon Steel

Caustic Storage Drum

Type	Horizontal
Quantity	1
Diameter	4 ft
Length	12 ft
Pressure	20 psia
Temperature	100 F
Materials of Construction	Carbon Steel

Heat Exchangers

Solvent Column Reboiler

Type	Shell and tube
Quantity	1
Fluid (Hot/Cold)	MP Steam / Column Bottoms
Duty	0.42 MMBtu/hr
Area	63 ft2
Pressure	30 psia
Temperature	500 F
Materials of Construction	Carbon Steel

Solvent Column Condenser

Type	Shell and Tube
Quantity	1
Fluid (Hot/Cold)	Column Overheads / Cooling Water
Duty	0.27 MMBtu/hr
Area	42 ft2
Pressure	30 psia
Temperature	400 F
Materials of Construction	316 Stainless

Sour Gas Column Reboiler

Type	Shell and Tube
Quantity	1
Fluid (Hot/Cold)	LP Steam / Column Bottoms
Duty	0.312 MMBtu/hr
Area	120 ft2
Pressure	50 psia
Temperature	400 F
Materials of Construction	Carbon Steel

Sour Gas Column Condenser

Type	Shell and Tube
Quantity	1
Fluid (Hot/Cold)	Column Overheads / Cooling Water
Duty	0.1 MMBtu/hr
Area	17 ft2
Pressure	50 psia
Temperature	300 F
Materials of Construction	316 Stainless

Compressors

Air Compressor

Type	Centrifugal
Quantity	1
Fluid	Air
Work	70 hp
Pressure Rise	5 psi
Outlet Pressure	20 psia
Temperature	200 F
Materials of Construction	Carbon Steel

Miscellaneous

Water Clarifier

Quantity	1 operating
Fluid	10% TSS Water @ 30 gpm
Temperature	100 F

VIII.19.3 RECTISOL SYSTEM

Towers

Rectisol Absorber

Type	Tray column
Quantity	1
Diameter	9 ft
Height	100 ft
Number of Trays	50
Pressure	330 psia
Temperature	-60 to 10 F
Materials of Construction	316 Stainless

Flash Regenerator

Type	Tray column
Quantity	1
Diameter	6 ft, 6 inch
Height	45 ft
Number of Trays	23
Pressure	330 psia
Temperature	-35 to 50 F
Materials of Construction	316 Internals, Carbon Steel

Hot Regenerator

Type	Tray column
Quantity	1
Diameter	8 ft
Height	39 ft
Number of Ideal Stages	18
Pressure	50 psia
Temperature	100-500 F
Materials of Construction	316 Stainless

Methanol Stripper

Type	Packed column
Quantity	1
Diameter	3 ft, 6 inches
Height	25 ft
Number of Ideal Stages	20
Pressure	80 psia
Temperature	300 F
Materials of Construction	Carbon steel shell
Packing Material	1 inch ceramic Raschig rings

Package Units

Refrigeration System

Refrigerant	Propylene
Quantity	1
Duty	11 MMBtu/hr (910 ton)

Tanks

Pre-wash Flash Tank

Type	Vertical
Quantity	1
Diameter	1 ft, 6 inch
Total Vessel Height	5 ft
Liquid Level Height	2 ft
Pressure	50 psia
Temperature	100 F
Materials of Construction	Carbon Steel

BTX Overflow Decanter

Type	Horizontal, Skimmer Weir
Quantity	1
Height	2 ft
Length	4 ft
Width	2 ft
Pressure	20 psia
Temperature	50 F
Materials of Construction	Carbon Steel

Heat Exchangers

Feed Gas Cooler

Type	Shell and Tube
Quantity	1
Fluid (Hot/Cold)	Raw Syngas / Treated Syngas
Duty	11 MMBtu/hr
Area	38,824 ft2
Pressure	400 psia
Temperature	-20 to 100 F
Materials of Construction	Carbon Steel

Treated Gas Exchanger

Type	Shell and Tube
Quantity	1
Fluid (Hot/Cold)	Absorber Bottoms / Treated Syngas
Duty	2.4 MMBtu/hr
Area	3,644 ft2
Pressure	400 psia
Temperature	-60 to 0 F
Materials of Construction	316 Stainless

Inter-stage Wash Cooler

Type	Shell and Tube
Quantity	1
Fluid (Hot/Cold)	Methanol / Propylene
Duty	4.3 MMBtu/hr
Area	3,222 ft2
Pressure	400 psia
Temperature	-60 F
Materials of Construction	316 Stainless

Lean Methanol Cooler

Type	Shell and Tube
Quantity	1
Fluid (Hot/Cold)	Methanol / Propylene
Duty	17.5 MMBtu/hr
Area	4,680 ft2
Pressure	400 psia
Temperature	-60 F
Materials of Construction	316 Stainless

Heat Exchangers (continued)

Hot Regenerator Overheads Condenser

Type	Shell and Tube
Quantity	1
Fluid (Hot/Cold)	Overheads / Cooling Water
Duty	0.9 MMBtu/hr
Area	436 ft2
Pressure	100 psia
Temperature	100 F
Materials of Construction	316 Stainless

Hot Regenerator Reboiler

Type	Shell and Tube
Quantity	1
Fluid (Hot/Cold)	LP Steam / Hot Regenerator Bottoms
Duty	5.3 MMBtu/hr
Area	785 ft2
Pressure	200 psia
Temperature	300 F
Materials of Construction	Carbon Steel

Methanol Stripper Feed Heater

Type	Shell and Tube
Quantity	1
Fluid (Hot/Cold)	LP Steam / Column Feed
Duty	0.1 MMBtu/hr
Area	3 ft2
Pressure	100 psia
Temperature	200 F
Materials of Construction	Carbon Steel

Methanol Stripper Overheads Condenser

Type	Shell and Tube
Quantity	1
Fluid (Hot/Cold)	Overheads / Cooling Water
Duty	2.2 MMBtu/hr
Area	200 ft2
Pressure	100 psia
Temperature	200 F
Materials of Construction	Carbon Steel

Heat Exchangers (continued)

Methanol Stripper Reboiler

Type	Shell and Tube
Quantity	1
Fluid (Hot/Cold)	LP Steam / Column Bottoms
Duty	2.4 MMBtu/hr
Area	623 ft2
Pressure	100 psia
Temperature	300 F
Materials of Construction	Carbon Steel

Tail Gas Exchanger

Type	Shell and Tube
Quantity	1
Fluid (Hot/Cold)	Absorber Bottoms / Tail Gas
Duty	5.4 MMBtu/hr
Area	6,970 ft2
Pressure	100 psia
Temperature	300 F
Materials of Construction	316 Stainless

Pumps

Lean Methanol Pump

Type	Centrifugal
Quantity	1 operating / 1 spare
Fluid	Methanol @ 900 gpm
Work	200 hp
Pressure Rise	200 psi
Outlet Pressure	350 psia
Temperature	300 F
Materials of Construction	316 clad on Carbon Steel

Rich Methanol Pump

Type	Centrifugal
Quantity	1 operating / 1 spare
Fluid	Methanol @ 980 gpm
Work	100 hp
Pressure Rise	100 psi
Outlet Pressure	250 psia
Temperature	100 F
Materials of Construction	316 clad on Carbon Steel

Hot Regenerator Bottoms Pump

Type	Centrifugal
Quantity	1 operating / 1 spare
Fluid	Methanol @ 50 gpm
Work	30 hp
Pressure Rise	23 psi
Outlet Pressure	50 psia
Temperature	120 F
Materials of Construction	Carbon Steel

BTX Bottoms Pump

Type	Centrifugal
Quantity	1 operating / 1 spare
Fluid	Methanol @ 10 gpm
Work	20 hp
Pressure Rise	30 psi
Outlet Pressure	80 psia
Temperature	100 F
Materials of Construction	Carbon Steel

Pumps (continued)

Methanol Stripper Pump

Type	Centrifugal
Quantity	1 operating / 1 spare
Fluid	Methanol @ 30 gpm
Work	10 hp
Pressure Rise	5 psi
Outlet Pressure	40 psia
Temperature	150 F
Materials of Construction	Carbon Steel

Methanol Stripper Bottoms Pump

Type	Centrifugal
Quantity	1 operating / 1 spare
Fluid	Methanol @ 30 gpm
Work	10 hp
Pressure Rise	5 psi
Outlet Pressure	40 psia
Temperature	150 F
Materials of Construction	Carbon Steel

VIII.19.4 CLAUS SYSTEM

Towers

Water Wash Tower

Type	Tray column
Quantity	1
Diameter	4 ft, 6 inch
Height	40 ft
Number of Trays	15
Pressure	30 psia
Temperature	150 F
Materials of Construction	316 Stainless

Process Reactors

Claus Furnace

Type	Horizontal
Quantity	1
Diameter	5 ft
Height	15 ft
Pressure	50 psia
Temperature	2,500 F
Catalyst Volume	N/A
Catalyst Life	None
Materials of Construction	Refractory-lined carbon steel

Claus Sulfur Converter No. 1

Type	Fixed-bed
Quantity	1
Diameter	5 ft, 2 inch
Height	15 ft
Pressure	30 psia
Temperature	600 F
Catalyst Volume	240 ft3
Catalyst Life	1 year
Materials of Construction	Carbon Steel

Claus Sulfur Converter No. 2

Type	Fixed-bed
Quantity	1
Diameter	5 ft, 2 inch
Height	15 ft
Pressure	30 psia
Temperature	600 F
Catalyst Volume	240 ft3
Catalyst Life	1 year
Materials of Construction	Carbon Steel

Hydrogenation Reactor

Type	Fixed-bed
Quantity	1
Diameter	4 ft, 6 inch
Height	14 ft
Pressure	30 psia
Temperature	600 F
Catalyst Volume	130 ft3
Catalyst Life	1 year
Materials of Construction	Carbon Steel

Tanks

Medium Pressure Steam Drum

Type	Horizontal
Quantity	1
Diameter	8 ft
Length	24 ft
Pressure	700 psia
Temperature	500 F
Materials of Construction	Carbon Steel

Low Pressure Steam Drum

Type	Horizontal
Quantity	1
Diameter	4 ft
Length	12 ft
Pressure	120 psia
Temperature	500 F
Materials of Construction	Carbon Steel

Sulfur Storage Pit

Type	In-ground pit
Quantity	1
Height	10 ft
Length	12 ft
Width	7 ft
Pressure	15 psia
Temperature	300 F
Materials of Construction	Concrete, epoxy lined

Sulfur Storage Tank

Type	Vertical
Quantity	1
Diameter	40 ft
Height	42 ft
Pressure	20 psia
Temperature	500 F
Materials of Construction	Carbon Steel, epoxy lined

Heat Exchangers

Waste Heat Boiler

Type	Fired Tube
Quantity	1
Fluid (Hot/Cold)	Claus gas / MP Steam
Duty	8.5 MMBtu/hr
Area	652 ft2
Pressure	600 psia
Temperature	1,600 F
Materials of Construction	Stainless Steel

Acid Gas Heater

Type	Shell and Tube
Quantity	1
Fluid (Hot/Cold)	MP Steam / Acid Gas
Duty	1.71 MMBtu/hr
Area	520 ft2
Pressure	600 psia
Temperature	600 F
Materials of Construction	316 Stainless

Oxidant Heater

Type	Shell and Tube
Quantity	1
Fluid (Hot/Cold)	MP Steam / Air
Duty	0.35 MMBtu/hr
Area	143 ft2
Pressure	600 psia
Temperature	600 F
Materials of Construction	Carbon Steel

Sour Gas Heater

Type	Shell and Tube
Quantity	1
Fluid (Hot/Cold)	MP Steam / Sour Gas
Duty	0.6 MMBtu/hr
Area	30 ft2
Pressure	600 psia
Temperature	600 F
Materials of Construction	316 Stainless

Heat Exchangers (continued)

Claus Reactor No. 1 Preheater

Type	Shell and Tube
Quantity	1
Fluid (Hot/Cold)	MP Steam / Claus Gas
Duty	0.51 MMBtu/hr
Area	321 ft2
Pressure	600 psia
Temperature	600 F
Materials of Construction	Carbon Steel

Claus Reactor No. 2 Preheater

Type	Shell and Tube
Quantity	1
Fluid (Hot/Cold)	MP Steam / Claus Gas
Duty	0.54 MMBtu/hr
Area	207 ft2
Pressure	600 psia
Temperature	600 F
Materials of Construction	Carbon Steel

Hydrogenation Reactor Preheater

Type	Shell and Tube
Quantity	1
Fluid (Hot/Cold)	MP Steam / Claus Tail Gas
Duty	1.01 MMBtu/hr
Area	458 ft2
Pressure	600 psia
Temperature	600 F
Materials of Construction	Carbon Steel

Hydrogenation Reactor Cooler

Type	Shell and Tube
Quantity	1
Fluid (Hot/Cold)	Claus Tail Gas / LP Steam
Duty	0.75 MMBtu/hr
Area	314 ft2
Pressure	100 psia
Temperature	400 F
Materials of Construction	Carbon Steel

Heat Exchangers (continued)

Sulfur Condenser No. 1

Type	Shell and Tube
Quantity	1
Fluid (Hot/Cold)	Claus Gas-Sulfur / LP Steam
Duty	2.1 MMBtu/hr
Area	633 ft2
Pressure	100 psia
Temperature	400 F
Materials of Construction	316

Sulfur Condenser No. 2

Type	Shell and Tube
Quantity	1
Fluid (Hot/Cold)	Claus Gas-Sulfur / LP Steam
Duty	1.3 MMBtu/hr
Area	833 ft2
Pressure	100 psia
Temperature	400 F
Materials of Construction	316

Sulfur Condenser No. 3

Type	Shell and Tube
Quantity	1
Fluid (Hot/Cold)	Claus Gas-Sulfur / LP Steam
Duty	0.9 MMBtu/hr
Area	579 ft2
Pressure	100 psia
Temperature	400 F
Materials of Construction	316

Sulfur Storage Heater

Type	Bayonet
Quantity	1
Fluid (Hot/Cold)	MP Steam / Molten Sulfur
Duty	10 MMBtu/hr
Area	500 ft2
Pressure	600 psia
Temperature	400 F
Materials of Construction	316

Heat Exchangers (continued)

Oxidant Heater

Type	Shell and Tube
Quantity	1
Fluid (Hot/Cold)	MP Steam / Oxygen
Duty	0.1 MMBtu/hr
Area	20 ft2
Pressure	100 psia
Temperature	450 F
Materials of Construction	316 Stainless

Compressors

Air Compressor

Type	Centrifugal
Quantity	1
Fluid	Air
Work	130 hp
Pressure Rise	20 psi
Outlet Pressure	35 psia
Temperature	300 F
Materials of Construction	Carbon Steel

Tail Gas Compressor

Type	Centrifugal
Quantity	1
Fluid	Claus Tail Gas
Work	90 hp
Pressure Rise	10 psi
Outlet Pressure	35 psia
Temperature	300 F
Materials of Construction	Carbon Steel

Pumps

Medium Pressure BFW Pump

Type	Centrifugal
Quantity	1 operating / 1 spare
Fluid	Water @ 150 gpm
Work	100 hp
Pressure Rise	30 psi
Outlet Pressure	700 psia
Temperature	600 F
Materials of Construction	Carbon Steel

Low Pressure BFW Pump

Type	Centrifugal
Quantity	1 operating / 1 spare
Fluid	Water @ 100 gpm
Work	50 hp
Pressure Rise	30 psi
Outlet Pressure	100 psia
Temperature	400 F
Materials of Construction	Carbon Steel

Wash Water Tower Pump

Type	Centrifugal
Quantity	1 operating / 1 spare
Fluid	Water @ 500 gpm
Work	30 hp
Pressure Rise	10 psi
Outlet Pressure	30 psia
Temperature	120 F
Materials of Construction	Carbon Steel

Sulfur Pump

Type	Centrifugal
Quantity	1 operating / 1 spare
Fluid	Molten Sulfur @ 50 gpm
Work	20 hp
Pressure Rise	5 psi
Outlet Pressure	20 psia
Temperature	400 F
Materials of Construction	316 Stainless Steel

Skids

Molten Sulfur Truck Loading Skid

Quantity	1 operating
Fluid	Molten Sulfur @ 200 gpm
Temperature	300 F

VIII.19.5 WATER-GAS SHIFT SYSTEM

Towers

Humidification Tower

Type	Tray Column
Quantity	1
Diameter	7 ft, 6 inch
Height	40 ft
Number of Trays	30
Pressure	300 psia
Temperature	400 F
Materials of Construction	316 Stainless Internals, Carbon Steel Shell

De-Saturator

Type	Tray Column
Quantity	1
Diameter	8 ft, 6 inch
Height	45 ft
Number of Trays	32
Pressure	300 psia
Temperature	400 F
Materials of Construction	316 Stainless Internals, Carbon Steel Shell

Process Reactors

Sour Shift Guard Bed

Type	Fixed-bed
Quantity	1
Diameter	4 ft, 6 inch
Height	14 ft
Pressure	350 psia
Temperature	800 F
Catalyst Volume	170 ft3
Catalyst Life	2 year
Materials of Construction	304L clad on Carbon Steel

Sour Shift Primary Bed

Type	Fixed-bed
Quantity	1
Diameter	3 ft, 6 inch
Height	11 ft
Pressure	350 psia
Temperature	800 F
Catalyst Volume	80 ft3
Catalyst Life	2 year
Materials of Construction	304L clad on Carbon Steel

Sour Shift Secondary Bed

Type	Fixed-bed
Quantity	1
Diameter	4 ft, 6 inch
Height	14 ft
Pressure	350 psia
Temperature	800 F
Catalyst Volume	150 ft3
Catalyst Life	3 year
Materials of Construction	304L clad on Carbon Steel

Tanks

Shift Gas Phase Separator

Type	Horizontal
Quantity	1
Diameter	6 ft
Length	18 ft
Pressure	350 psia
Temperature	500 F
Materials of Construction	304L clad on Carbon Steel

Heat Exchangers

Start-Up Heater

Type	Shell and Tube
Quantity	1
Fluid (Hot/Cold)	HP Steam/Syngas
Duty	10 MMBtu/hr
Area	5,000 ft2
Pressure	350 psia
Temperature	600 F
Materials of Construction	Carbon Steel

Guard Bed Heater

Type	Shell and Tube
Quantity	1
Fluid (Hot/Cold)	Syngas / Syngas
Duty	12.1 MMBtu/hr
Area	4,706 ft2
Pressure	350 psia
Temperature	600 F
Materials of Construction	Carbon Steel

Primary Bed Heater

Type	Shell and Tube
Quantity	1
Fluid (Hot/Cold)	Syngas / Saturation Water
Duty	19.3 MMBtu/hr
Area	15,197 ft2
Pressure	350 psia
Temperature	800 F
Materials of Construction	304L clad on Carbon Steel

Primary Bed Cooler

Type	Shell and Tube
Quantity	1
Fluid (Hot/Cold)	Syngas / Saturation Water
Duty	7.3 MMBtu/hr
Area	1,955 ft2
Pressure	350 psia
Temperature	800 F
Materials of Construction	316 Stainless clad

Heat Exchangers (continued)

Sat Water Loop Cooler

Type	Shell and Tube
Quantity	1
Fluid (Hot/Cold)	Sat Water / Cooling Water
Duty	74 MMBtu/hr
Area	12,652 ft2
Pressure	300 psia
Temperature	300 F
Materials of Construction	Carbon Steel

Secondary Bed Cooler

Type	Shell and Tube
Quantity	1
Fluid (Hot/Cold)	Syngas / Sat Water
Duty	11.2 MMBtu/hr
Area	149 ft2
Pressure	350 psia
Temperature	700 F
Materials of Construction	Carbon Steel

Secondary Bed Heater

Type	Shell and Tube
Quantity	1
Fluid (Hot/Cold)	Shifted gas / Claus Tail Gas
Duty	29.5 MMBtu/hr
Area	12,461 ft2
Pressure	350 psia
Temperature	700 F
Materials of Construction	Carbon Steel

Secondary Bed Exchanger

Type	Shell and Tube
Quantity	1
Fluid (Hot/Cold)	Shifted Gas / Cooling Water
Duty	4.7 MMBtu/hr
Area	871 ft2
Pressure	350 psia
Temperature	500 F
Materials of Construction	Carbon Steel

Heat Exchangers (continued)

Product Cooler

Type	Shell and Tube
Quantity	1
Fluid (Hot/Cold)	Shifted Gas / Cooling Water
Duty	31 MMBtu/hr
Area	14,912 ft2
Pressure	350 psia
Temperature	400 F
Materials of Construction	Carbon Steel

Pumps

Humidification Loop Water Pump

Type	Centrifugal
Quantity	1 operating / 1 spare
Fluid	Water @ 800 gpm
Work	50 hp
Pressure Rise	30 psi
Outlet Pressure	350 psia
Temperature	400 F
Materials of Construction	Carbon Steel

Desaturator Water Pump

Type	Centrifugal
Quantity	1 operating / 1 spare
Fluid	Water @ 800 gpm
Work	50 hp
Pressure Rise	30 psi
Outlet Pressure	350 psia
Temperature	400 F
Materials of Construction	Carbon Steel

VIII.19.6 METHANATION SYSTEM

Towers

Humidification Tower

Type	Tray Column
Quantity	1
Diameter	5 ft, 6 inch
Height	30 ft
Number of Trays	15
Pressure	300 psia
Temperature	400 F
Materials of Construction	316 Stainless Internals, Carbon Steel Shell

Process Reactors

Primary Methanator

Type	Fixed-bed
Quantity	1
Diameter	6 ft
Height	18 ft
Pressure	350 psia
Temperature	800 F
Catalyst Volume	370 ft3
Catalyst Life	3 year
Materials of Construction	304L clad on Carbon Steel

Secondary Methanator

Type	Fixed-bed
Quantity	1
Diameter	3 ft, 10 inch
Height	11 ft, 6 inch
Pressure	350 psia
Temperature	800 F
Catalyst Volume	100 ft3
Catalyst Life	6 year
Materials of Construction	304L clad on Carbon Steel

Sulfur Guard

Type	Fixed-bed
Quantity	1
Diameter	5 ft, 6 inch
Height	16 ft
Pressure	350 psia
Temperature	500 F
Catalyst Volume	270 ft3
Catalyst Life	3 year
Materials of Construction	Carbon Steel

Tanks

Condensate Surge Tank

Type	Vertical
Quantity	1
Diameter	10 ft
Height	11 ft
Pressure	350 psia
Temperature	400 F
Materials of Construction	Carbon Steel

Reactor Steam Drum

Type	Horizontal
Quantity	1
Diameter	7 ft
Length	20 ft
Pressure	700 psia
Temperature	500 F
Materials of Construction	Carbon Steel

HRSG Steam Drum

Type	Horizontal
Quantity	1
Diameter	6 ft
Length	18 ft
Pressure	700 psia
Temperature	500 F
Materials of Construction	Carbon Steel

Heat Exchangers

Guard Bed Heater

Type	Shell and Tube
Quantity	1
Fluid (Hot/Cold)	Syngas / Syngas
Duty	13.5 MMBtu/hr
Area	3,997 ft2
Pressure	350 psia
Temperature	900 F
Materials of Construction	304L clad on Carbon Steel

Primary Bed Cooler – S/H

Type	Shell and Tube
Quantity	1
Fluid (Hot/Cold)	Syngas / Steam
Duty	16.8 MMBtu/hr
Area	6,073 ft2
Pressure	600 psia
Temperature	800 F
Materials of Construction	304L clad on Carbon Steel

Primary Bed Cooler – Evap

Type	Shell and Tube
Quantity	1
Fluid (Hot/Cold)	Syngas / Boiling Water
Duty	39 MMBtu/hr
Area	11,188 ft2
Pressure	600 psia
Temperature	800 F
Materials of Construction	304L clad on Carbon Steel

Primary Bed Cooler – Econ

Type	Shell and Tube
Quantity	1
Fluid (Hot/Cold)	Syngas / Subcooled Water
Duty	31 MMBtu/hr
Area	15,332 ft2
Pressure	600 psia
Temperature	800 F
Materials of Construction	316 Stainless clad

Heat Exchangers (continued)

Secondary Reactor Bed Cooler

Type	Shell and Tube
Quantity	1
Fluid (Hot/Cold)	Syngas / Boiling Water
Duty	51 MMBtu/hr
Area	23,114 ft2
Pressure	600 psia
Temperature	800 F
Materials of Construction	304L clad on Carbon Steel

Secondary Bed Cooler

Type	Shell and Tube
Quantity	1
Fluid (Hot/Cold)	SNG Product Gas / Sat Water
Duty	42.7 MMBtu/hr
Area	14,760 ft2
Pressure	350 psia
Temperature	700 F
Materials of Construction	Carbon Steel

SNG Cooler I

Type	Shell and Tube
Quantity	1
Fluid (Hot/Cold)	SNG Product Gas / Boiling Water
Duty	54 MMBtu/hr
Area	53,816 ft2
Pressure	350 psia
Temperature	700 F
Materials of Construction	Carbon Steel

SNG Cooler II

Type	Shell and Tube
Quantity	1
Fluid (Hot/Cold)	SNG Product Gas / Sat Water
Duty	42 MMBtu/hr
Area	58,299 ft2
Pressure	350 psia
Temperature	500 F
Materials of Construction	Carbon Steel

Heat Exchangers (continued)

SNG Cooler III

Type	Shell and Tube
Quantity	1
Fluid (Hot/Cold)	SNG Product Gas / Cooling Water
Duty	23 MMBtu/hr
Area	12,792 ft2
Pressure	350 psia
Temperature	400 F
Materials of Construction	Carbon Steel

Pumps

Humidification Loop Water Pump

Type	Centrifugal
Quantity	1 operating / 1 spare
Fluid	Water @ 230 gpm
Work	20 hp
Pressure Rise	30 psi
Outlet Pressure	350 psia
Temperature	400 F
Materials of Construction	Carbon Steel

Surge Tank Water Pump

Type	Centrifugal
Quantity	1 operating / 1 spare
Fluid	Water @ 500 gpm
Work	40 hp
Pressure Rise	30 psi
Outlet Pressure	350 psia
Temperature	400 F
Materials of Construction	Carbon Steel

Skid Units

TEG Unit

Gas Flow	50,000 ft3/hr
Gas Temp	120 F
Gas Pressure	270
Inlet Moisture	6,500 ppm
Outlet Moisture	10 ppm

VIII.19.7 STEAM SYSTEM

Tanks

Flash Tank

Type	Vertical
Quantity	1
Diameter	8 ft
Height	20 ft
Pressure	100 psia
Temperature	400 F
Materials of Construction	Carbon Steel

Dearator

Type	Horizontal
Quantity	1
Diameter	15 ft
Length	30 ft
Pressure	100 psia
Temperature	500 F
Materials of Construction	Carbon Steel

Pumps

LP BFW Pump

Type	Centrifugal
Quantity	1 operating / 1 spare
Fluid	Water @ 30 gpm
Work	20 hp
Pressure Rise	250 psi
Outlet Pressure	300 psia
Temperature	300 F
Materials of Construction	Carbon Steel

IP BFW Pump

Type	Centrifugal
Quantity	1 operating / 1 spare
Fluid	Water @ 50 gpm
Work	30 hp
Pressure Rise	600 psi
Outlet Pressure	650 psia
Temperature	300 F
Materials of Construction	Carbon Steel

HP BFW Pump

Type	Centrifugal
Quantity	1 operating / 1 spare
Fluid	Water @ 230 gpm
Work	250 hp
Pressure Rise	870 psi
Outlet Pressure	900 psia
Temperature	300 F
Materials of Construction	Carbon Steel

Skid Units

Fired Boiler Steam Generator

Steam Flow	20,000 lb/hr
Steam Temp	685 F
Steam Pressure	540 psia
Duty	30 MMBtu/hr

VIII.19.8 CIRCULATING WATER SYSTEM

Plume-abated mechanical draft cooling tower

Cooling Duty: 159 MMBtu/hr

Circulating water flow rate: 17,644 gpm

Pumps

VIII.19.9 COAL AND LIMESTONE RECEIVING AND HANDLING SYSTEMS

Item No.	Equipment	Quantity	Flow Rate TPH	Specs	weight	Comments
	Coal handling system					
1	Truck Scale	1		200,000 lb, 80'x11', 8 load cells	33,800Lb	
2	Coal Reclaim Feeder	1	250	40'-0" lg		
3	Vib. Screen	1	250	8' wx16 lg		
4	Coal Silos Loading HAC	1	250			
5	Coal Scale	1	250			
6	Magnetic Separator	1	250	42" w x 66" lg x 30" h		with rectifier
7	Overs Conveyor (Optional)					
8	Reversible Belt Conveyor	1	250			
9	Coal Silo A	1		430T, 32' dia. X 70' high		
10	Coal Silo B	1		430T, 32' dia. X 70' high		
11	Coal Maint Gates A	1		24" sq. manual		
12	Coal Maint Gates B	1		24" sq. manual		
13	Coal Diverter Gate A	1		24" sq. Pneumatic		
14	Coal Diverter Gate B	1		24" sq. Pneumatic		
15	Coal Silo discharge feeder A	1		24"x 44'-0"		
16	Coal Silo discharge feeder B	1	50	24"X 48'-0"		
	Limestone handling system					
17	Loading Hopper	1		1000 lbs 5'sq.x3' high		
18	Limestone Reclaim Feeder	1	10	12" dia. X 10'-0"		
19	Limestone Silos Loading HAC	1	10			
20	Limestone Scale	1				
21	limestone Silo	1		22T, 12' dia. X 28'		
22	Limestone Maint Gate	1		24" sq. manual		
23	Limestone Diverter Gate	1		24" sq. Pneumatic		
24	Limestone Silo discharge feeder A	1		12" x 12'-0"		
25	Limestone Silo discharge feeder B	1		12" x 18'-0"		
	Coal/Limestone					
26	Gasifier Feed HAC A	1				
27	Gasifier Feed HAC B	1				
28	Weigh Hopper	1		50T, 12' dia. 18'		
29	Weigh Hopper Load Cells	4				Add 4 Load cells
30	Loss weigh Hopper	1		7T, 6' dia. X 10'		

This page is intentionally left blank

Industrial Size Gasification for Syngas, Substitute Natural Gas and Power Production

Section IX - Case 3A Conceptual Design Description
Syngas to Power Reference Plant – Illinois #6 Coal

DOE/NETL-401 / 040607

FR-53769211

April 2007

Disclaimer

This report was prepared as an account of work sponsored by an agency of the United States Government. Neither the United States Government nor any agency thereof, nor any of their employees, makes any warranty, express or implied, or assumes any legal liability or responsibility for the accuracy, completeness, or usefulness of any information, apparatus, product, or process disclosed, or represents that its use would not infringe privately owned rights. Reference therein to any specific commercial product, process, or service by trade name, trademark, manufacturer, or otherwise does not necessarily constitute or imply its endorsement, recommendation, or favoring by the United States Government or any agency thereof. The views and opinions of authors expressed therein do not necessarily state or reflect those of the United States Government or any agency thereof.

Industrial Size Gasification for Syngas, Substitute Natural Gas and Power Production

Section IX - Case 3A Conceptual Design Description
Syngas to Power Reference Plant – Illinois #6 Coal

DOE/NETL-401 / 040607

FR-53769211

April 2007

NETL Contact: DE-AC26-04NT41817.401.01.05.002

Office of Systems Analysis and Planning Support

Prepared by:

Leonard M. Bartone, Jr., P.E.
Jay White
WorleyParsons Group Inc.

Research and Development Solutions, LLC.

National Energy Technology Laboratory
www.netl.doe.gov

This page is intentionally left blank

SECTION IX TABLE OF CONTENTS

Section IX Table of Contents ..... *IX-i*

Section IX List of Exhibits ..... *IX-iii*

Terminology ..... *IX-v*

Acknowledgements ..... *IX-vii*

IX.1 Summary *IX-1*

IX.2 System Description and Performance *IX-5*

IX.2.1 System Description **IX-5**

IX.2.2 Heat & Material Balance, Performance Estimates, and Emissions Estimates **IX-9**

IX.3 Plot Plan and Site Layout *IX-53*

IX.4 Solids Handling Systems Descriptions *IX-57*

IX.4.1 Coal Receiving, Storage, and Handling **IX-57**

IX.4.1.1 Coal Receiving and Storage IX-57

IX.4.1.2 Coal Handling and Preparation System IX-57

IX.4.2 Limestone Receiving, Storage, and Handling **IX-58**

IX.4.2.1 Limestone Receiving and Storage IX-58

IX.4.2.2 Limestone Handling and Preparation System IX-59

IX.4.3 Coal/Limestone Gasifier Delivery System **IX-59**

IX.4.4 Slag Handling **IX-66**

IX.5 Gasifier Process Package Description *IX-67*

IX.5.1 Gasifier **IX-67**

IX.5.2 Coal/Limestone Feed System **IX-69**

IX.5.3 Slag Removal System **IX-70**

IX.5.4 Syngas Wash Cooler **IX-70**

IX.5.5 Waste Heat Exchanger (Primary Heat Exchanger) **IX-71**

IX.5.6 Syngas Cooling System **IX-71**

IX.5.7 Gas Liquor Separation and Tar/Oil Reinjection System **IX-71**

IX.6 Syngas Cleanup System Description IX-73
IX.6.1 Rectisol Process Description IX-73
IX.6.2 Claus Process Description IX-75
IX.7 Waste Water Treatment System Description IX-77
IX.8 Process Steam System Description IX-79
IX.9 Combustion Turbine Combined Cycle System IX-81
IX.9.1 Combustion Turbine/Generator IX-81
IX.9.2 HRSG IX-82
IX.9.3 Steam Turbine/Generator IX-82
IX.10 Flare System Description IX-83
IX.11 Circulating Water System Description IX-85
IX.12 Process Water Supply System IX-87
IX.13 Instrumentation and Control System Description IX-89
IX.14 Electrical System Description IX-91
IX.15 Air Separation Unit Description IX-93
IX.16 Capital and O&M Cost Estimates IX-95
IX.16.1 Cost Estimating Approach IX-95
IX.16.2 Cost Basis and Assumptions IX-96
IX.16.2.1 Capital Cost Basis and Assumptions IX-96
IX.16.2.2 Operating and Maintenance Cost Basis and Assumptions IX-98
IX.16.2.3 Results IX-99
IX.17 Conclusion IX-103
IX.18 Major Equipment List IX-105
IX.18.1 Gasifier Process Package IX-105
IX.18.2 Waste Water Treatment System IX-107
IX.18.3 Rectisol System IX-111
IX.18.4 Claus System IX-118
IX.18.5 Gas turbine/Generator System IX-127
IX.18.6 Steam Turbine and HRSG Systems IX-131
Circulating Water System IX-134
IX.18.7 Coal and Limestone Receiving and Handling Systems IX-135

SECTION IX LIST OF EXHIBITS

Exhibit IX.2-1 Sketch of Major Systems Comprising the Syngas to Power Reference Plant IX-8

Exhibit IX.2-2 Syngas to Power Plant Estimated Performance Summary IX-12

Exhibit IX.2-3 Gasification and Gas Cooling Conceptual Process Flow Diagram IX-13

Exhibit IX.2-4 Rectisol System Conceptual Process Flow Diagram IX-15

Exhibit IX.2-5 Sulfur Production (Claus) System Conceptual Process Flow Diagram IX-17

Exhibit IX.2-6 Waste Water Treatment System Conceptual Process Flow Diagram IX-19

Exhibit IX.2-7 Medium Pressure and Low Pressure Steam Circuit Conceptual Process Flow Diagram IX-21

Exhibit IX.2-8 Gas Cooling Loop Conceptual Process Flow Diagram IX-23

Exhibit IX.2-9 Gas Turbine System Conceptual Process Flow Diagram IX-25

Exhibit IX.2-10 Steam Turbine and HRSG Conceptual Process Flow Diagram IX-27

Exhibit IX.2-11 Intermediate Pressure Steam Circuit Conceptual Process Flow Diagram IX-29

Exhibit IX.2-12 Gasification and Gas Cooling Systems Estimated State Point Compositions and Conditions IX-31

Exhibit IX.2-13 Rectisol System Estimated State Point Compositions and Conditions IX-35

Exhibit IX.2-14 Sulfur Production (Claus) System Estimated State Point Compositions and Conditions IX-39

Exhibit IX.2-15 Waste Water Treatment System Estimated State Point Compositions and Conditions IX-41

Exhibit IX.2-16 Medium Pressure and Low Pressure Steam Circuit Estimated State Point Compositions and Conditions IX-43

Exhibit IX.2-17 Gas Cooling Loop Estimated State Point Compositions and Conditions IX-45

Exhibit IX.2-18 Syngas Humidification and Gas Turbine System Estimated State Point Compositions and Conditions IX-47

Exhibit IX.2-19 Steam Turbine and HRSG Estimated State Point Compositions and Conditions IX-51

Exhibit IX.3-1 Conceptual General Equipment Arrangement and Plot Plan for Syngas to Power Reference Plant IX-54

Exhibit IX.3-2 Conceptual Elevation of Gasification Process Installation IX-55

Exhibit IX.4-1 Simplified Process Flow Diagram of Coal and Limestone Receiving, Storage, and Handling System IX-61

Exhibit IX.4-2 Coal and Limestone Storage and Handling Systems General Arrangement IX-62

Exhibit IX.4-3 Example of Snake Sandwich High Angle Conveyor by Dos Santos International for Feeding Coal Silos IX-63

Exhibit IX.4-4 Example of Snake Sandwich High Angle Conveyor by Dos Santos International for Feeding Limestone Silo IX-64

Exhibit IX.4-5 Example of Snake Sandwich High Angle Conveyor by Dos Santos International for Feeding Coal/Limestone to Gasifier Hopper IX-65

Exhibit IX.5-1 Schematic of Gasifier IX-68

Exhibit IX.11-1 Estimated Circulated Cooling Water Requirements IX-85

Exhibit IX.12-1 Estimated Process Makeup Water Requirements IX-87

Exhibit IX.14-1 Estimated Electric Power Requirements Summary IX-91

Exhibit IX.16-1 Summary of Capital Cost Estimate IX-100

Exhibit IX.16-2 Estimated Annual O&M Costs IX-101

TERMINOLOGY

ASU ..... Air separation unit
BEC ..... Bare erected cost
BGL ..... British Gas Lurgi
BTX ..... Benzene, Toluene, and Xylene
Btu ..... British thermal unit
ºC ..... Degrees Celsius
CC ..... Combined cycle
CO_2 ..... Carbon dioxide
CT, GT ..... Combustion turbine, synonym for gas turbine
DME ..... Dimethyl ether
DOE ..... Department of Energy (United States)
DRD ..... Design Requirements Document
EIA ..... Energy Information Administration
EPA ..... Environmental Protection Agency
°F ..... degrees Fahrenheit
FOF ..... Forced outage factor
FOR ..... Forced outage rate
fps ..... Feet per second
GE ..... General Electric
GT, CT ..... Gas turbine, synonym for combustion turbine
GWh ..... Gigawatt-hour
Hg ..... Mercury
HHV ..... Higher Heating Value
HRSG ..... Heat recovery steam generator
ID ..... Induced Draft (fan)
IDC ..... Interest during construction
IGCC ..... Integrated Gasification Combined Cycle
kW, kWe ..... Kilowatt electric
kWt ..... Kilowatt thermal
KWh ..... Kilowatt-hour
LHV ..... Lower heaving value
MDEA ..... Methyl diethanol amine
MIBK ..... Methyl Isobutyl Ketone
MW, MWe ..... Megawatt electrical
MW_t ..... Megawatt thermal
MWh ..... Megawatt-hour
NETL ..... DOE National Energy Technology Laboratory
NOx ..... Nitrous oxides
O_2 ..... Oxygen
O&M ..... Operating and Maintenance
P&W ..... Pratt & Whitney
Part. ..... Particulate emissions
POX ..... Partial Oxidation
psia ..... Pound/square inch (14.696 psi = 1 atm)
Q ..... Heat
QGESS ..... DOE/NETL Quality Guidelines for Energy System Studies
S ..... Sulfur content of fuel
scf ..... Standard cubic feet (based on 14.7psia/60°F)
SNCR ..... Selective non-catalytic reduction (for NOx control)
SNG ..... Substitute (Synthetic) Natural Gas
SO_2 ..... Sulfur dioxide
ST ..... Steam turbine
Syngas ..... Synthetic gas
T&D ..... Transmission and distribution (electrical)
t ..... Short ton (2,000 lbs)

TG .....Turbo-generator, (turbine-generator)
t/h .....Ton/hour
ton.....short ton, (2000 lbs)
t/h,tph .....Ton per hour
t/y,tpy.....Ton per year
TPC .....Total plant cost
US, U.S. .....United States
USEPA United States Environmental Protection Agency
USD, US$ ..... The United States Dollar
USDOE ..... United States Department of Energy
y, yr..... Year

ACKNOWLEDGEMENTS

This work was performed under DOE/NETL Contract No. DE-AM26-04NT41817 with Research and Development Solutions (RDS), LLC. WorleyParsons Group Inc. performed the work under a subcontract agreement with RDS, Subcontract No. 41817M2943.

The NETL Project Manager for this activity was Jeffrey Hoffmann.

The authors acknowledge the contributions of Victor Shellhorse and Bill Jones of Allied Syngas Corporation who were of considerable assistance in describing the characteristics of the British Gas Lurgi gasifier.

This page is intentionally left blank

IX.1SUMMARY

A feasibility study was performed to evaluate the technical and economic viability of coal-derived syngas and substitute natural gas (SNG) refueling of U.S. industries. The study includes the development of Reference Plant Conceptual Designs for the following application scenarios:

Case 1 – A coal-derived syngas production plant, based on the BGL 1000 gasifier being marketed in North America by Allied Syngas Corporation, with a nominal gasifier capacity of approximately 1000 million Btu/hr (MMBtu/hr) of synthesis gas.

Case 1A – Illinois #6 Coal as fuel, no hydrogen production

Case 1AH - Illinois #6 Coal as fuel, with hydrogen production

Case 1B – PRB Coal as fuel, no hydrogen production

Case 1BH - PRB Coal as fuel, with hydrogen production

Case 2 – A coal-derived SNG production plant, based on the BGL 1000 gasifier, for distribution through natural gas pipelines.

Case 2A – Illinois #6 Coal as fuel

Case 2B – PRB Coal as fuel

Case 3 – A gas turbine refueling configuration for a nominal 80 to 150 MWe (combined cycle equivalent) based on the Case 1 syngas configuration

Case 3A – Illinois #6 Coal as fuel

Case 3B – PRB Coal as fuel

Case 4 – A gas turbine refueling configuration for a nominal 80 to 150 MWe (combined cycle equivalent) based on the Case 3 SNG configuration

Case 4A – Illinois #6 Coal as fuel

Case 4B – PRB Coal as fuel

As part of this effort, a conceptual design and conceptual level capital and operating and maintenance cost estimates were developed for a Syngas to Power Reference Plant, a syngas production plant refueling a gas turbine combined cycle. Allied Syngas Corporation and Envirotherm GmbH provided the gasifier performance and composition, temperature, and pressure of the syngas from the gasification process. A model of the gasification process integrated with the major supporting systems was developed using ASPEN Plus™ software, and mass and energy balance calculations were performed using the model. These data were used to define the functional requirements of the systems, performance estimates, and conceptual specifications of end-use equipment.

The combustion turbine selection is based on matching the syngas requirements of the combustion turbine as close as possible to the total net syngas production capability of the Syngas Production Reference Plant developed in this study and described in the Conceptual Design Description – Syngas Production Reference Plant in Section VI. There are minor modifications to the Syngas Production Reference Plant to improve the efficiency and minimize the cost for this application. The modifications are as follows:

- Steam for the processes in the syngas production plant is generated in the heat recovery steam generator (HRSG) in the combustion turbine combined cycle system, as well as steam for the steam turbine system, instead of in a separate syngas-fired boiler.
- A small portion of the sweet (clean) syngas from the Rectisol process is split off and used as supplemental fuel in a duct burner in the combined cycle HRSG before the major portion of the syngas from the Rectisol process is combined with the CO-rich tailgas from the process and sent as primary fuel to the combustion turbine.

The Syngas to Power Reference Plant design is based on the requirements defined in the Conceptual Design Requirements Document (DRD) in Section V. The requirements include the following:

- Fuel for the gasifier is Illinois #6 coal. The composition of the coal is defined in the DRD.

- Limestone is used as the flux in the gasifier.
- The gasifier uses an oxidant that contains 99.5% purchased from a third party who owns and operates an air separation unit (ASU) on the site. Nitrogen for purging is also purchased from the third party.
- Electrical power for the plant auxiliaries are provided by the combustion turbine combined cycle system.
- The gasifier will produce a medium-Btu syngas
- A Rectisol process will be used for syngas cleanup.
- Elemental sulfur will be produced as a byproduct.
- The gasifier process package design will be provided by Envirotherm/Allied Syngas Corporation and will consist of all equipment/systems from the coal/flux feed lock to the inlet of the syngas acid gas removal (AGR) system and the discharge of the slag lock, including the tar/oil separation system and reinjection system.
- The gasifier process package will include a spare gasifier complete with coal/flux feed lock, gasifier, gas wash cooler, slag quench vessel, and slag lock vessel
- The combustion turbine size for cases with combustion turbine combined cycles will match the syngas or SNG produced, as closely as possible, when using a single BGL gasifier in the gasification process. The combustion turbine used as the basis for the reference plant conceptual design is a syngas capable GE 6FA combustion turbine. The fuel requirement of the GE 6FA matches closely with the syngas output of the Syngas Production Reference Plant, and the GE 6FA has significant syngas firing experience.
- The combined cycle system will consist of one GE 6FA combustion turbine/generator, HRSG, and one steam turbine/generator.
- Nitrogen from the ASU will be used as a diluent in the combustion turbine combustor to reduce NOx emissions and enhance gas turbine power output.
- Capital cost estimates for the gasifier process will be based on a WorleyParsons' in-house BGL IGCC cost model utilized for previous IGCC evaluations.

- Capital cost estimates for other systems will be based on a combination of WorleyParsons' in-house cost data and budgetary quotes provided by equipment supplies.
- Construction labor costs will be based on Gulf Coast non-union labor rates.

This report describes a conceptual design analysis, as well as conceptual level cost estimates that are based upon approximate methods. The data developed are not at sufficient depth to be used for design or construction purposes. Cost data are only suited for planning and budget estimation purposes only, and are not of sufficient depth of detail to justify major capital investment.

The Reference Syngas to Power Plant for application to the Industrial sector produces approximately 117 MWe net power output from approximately 1,118 MMBtu/hr of Illinois #6 coal. The net plant thermal efficiency (as defined in the DOE Quality Guidelines for Energy System Studies for plants producing power) is estimated to be about 32.8%.

The following sections provide descriptions of the major systems and equipment comprising the Syngas to Power Reference Plant, estimated performance characteristics, mass and energy balances of the major systems, and capital and operating cost estimates. Although the syngas production plant in this application is essentially the same as that described in the Conceptual Design Description – Syngas Production Reference Plant – Illinois #6 Coal, as previously noted, the description of the plant is also included in this document to provide a complete, stand-alone description of the Syngas to Power Reference Plant.

IX.2SYSTEM DESCRIPTION AND PERFORMANCE

This section contains the system description, heat and mass balances, and performance estimates for the Syngas to Power Reference Plant.

IX.2.1 SYSTEM DESCRIPTION

The system utilizes an industrial size syngas production plant gasifying Illinois #6 coal in a single operating BGL gasifier to refuel a combustion turbine combined cycle system based on a single GE 6FA combustion turbine. The syngas production plant produces 135,606 lb/hr of cleaned syngas. Approximately 126,000 lb/hr is combined with 23,702 lb/hr of CO-rich tailgas from the Rectisol AGR system to produce a fuel with a heat content of approximately 875 MMBtu/hr, lower heating value (LHV), for the combustion turbine. The remaining 9,492 lb/hr of clean syngas with a heat content of approximately 63 MMBtu/hr (LHV) is used as supplemental fuel in a duct burner in the combined cycle system HRSG. A small amount of syngas is utilized in the Claus Unit. The combined cycle system HRSG not only generates steam for the system steam turbine, but also generates steam required for operation of the syngas production system processes. The net electric power generated by the Reference Plant is estimated to be about 117 MWe after the plant auxiliary power requirements are met.[a]

A sketch showing the major processes comprising the plant is presented in Exhibit IX.2-1. The plant contains the following major systems/processes:

- A gasifier process package consisting of an oxygen-fired BGL gasifier producing a medium Btu syngas; coal/limestone feed lock for introducing feedstock into the gasifier; syngas wash cooler and primary heat exchanger for cooling the syngas and

[a] Performance estimate based on information that WorleyParsons has on GE 6FA performance when firing syngas and have not been verified by General Electric for the specific reference plant syngas.

removing tars, oils, and particulates from the syngas; gas liquor separation and tar/oil recycle process for removing tars and oils from syngas condensate for reinjection into the gasifier; syngas coolers for decreasing the temperature of the syngas to meet the requirements of the syngas cleanup system; and a slag quench vessel and slag lock for removing slag from the gasifier.

- A spare gasifier with coal/limestone feed lock, gas wash cooler, slag quench vessel, and slag lock vessel.
- A syngas cleanup system consisting of a Rectisol acid gas removal system (AGR) for removal and concentration of acid gases (H_2S and COS) from the syngas to levels allowing industrial users to satisfy environmental criteria, and a Claus plant for producing elemental sulfur byproduct, from sulfur in the acid gas, for sale to industrial users. The Rectisol AGR system is also used to remove benzene, toluene, and xylene (naphtha-BTX) from the syngas stream for recycle to the gasifier.
- A waste water treatment system for removing contaminants from the liquor prior to recycling the waste water or discharging it to the environment.
- A coal receiving, storage, and delivery system for removing coal from trucks and delivering it to a coal storage area and then to the gasifier process coal feeding system.
- A limestone (flux) receiving, storage, and delivery system for removing limestone from trucks and delivering it to a limestone storage area and then to the gasifier process limestone feeding system.
- Slag handling system for collecting the slag discharged from the slag lock and transporting the slag to a storage and truck loading area.
- An air separation unit (ASU) owned and operated by a third party that provides oxygen and nitrogen to the gasification process and nitrogen to the combustion turbine combined cycle;
- A steam system for collecting steam from and distributing steam to the syngas production plant.
- Combustion turbine/generator for generating a portion of the electric power.
- HRSG for generating steam for the steam turbine power system.
- Steam turbine/generator for generating electrical power.

- Circulating water system that provides cooling water to the various systems in the plant.
- Balance of Plant systems for supporting the gasification process, including:
    - Process water supply system;
    - Flare system for combusting syngas during start-up and system upsets;
    - Air supply system;
    - Natural gas supply system;
    - Electrical system;
    - Instrumentation and control system; and
    - Chemical and byproduct storage.

Exhibit IX.2-1 Sketch of Major Systems Comprising the Syngas to Power Reference Plant

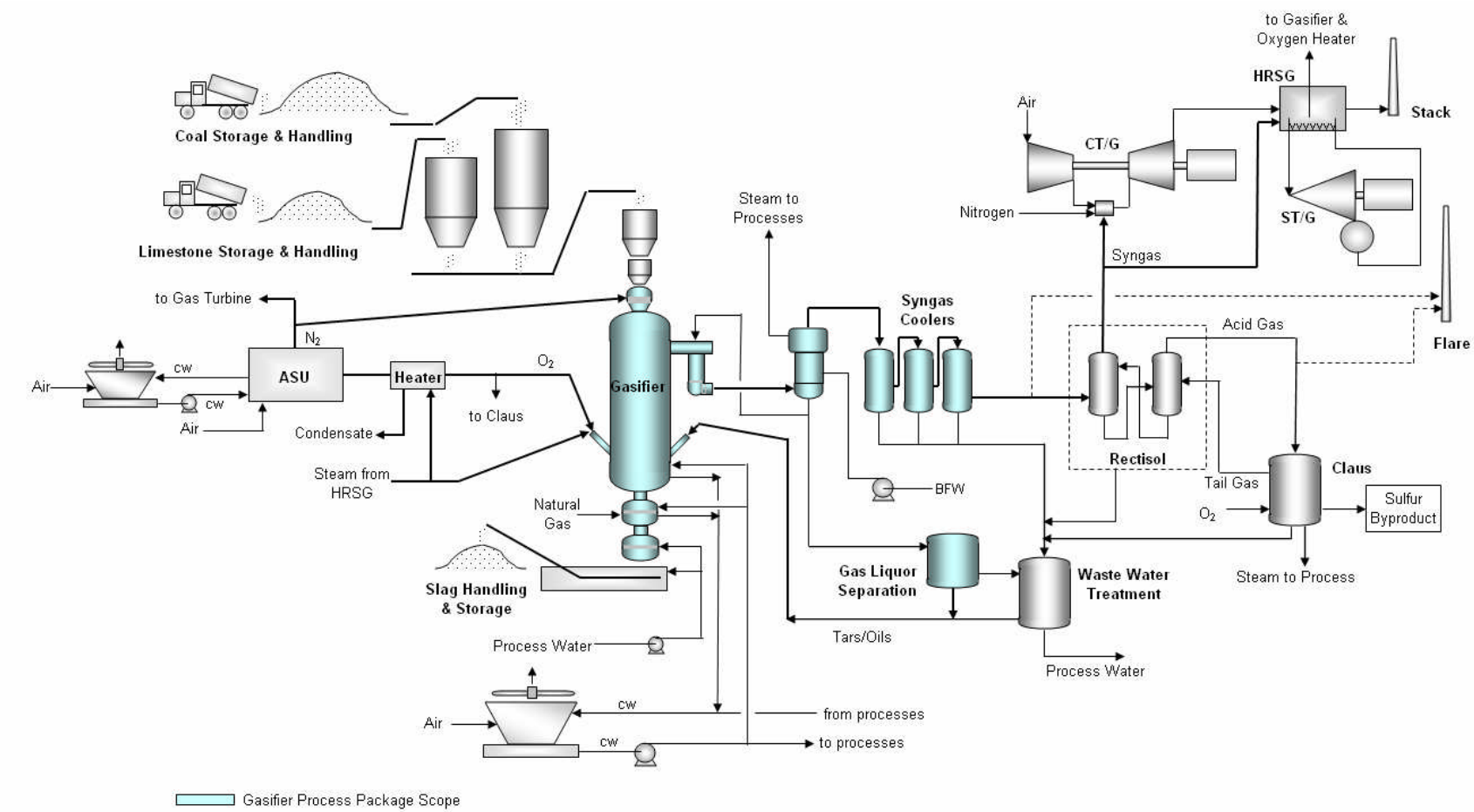

IX.2.2 HEAT & MATERIAL BALANCE, PERFORMANCE ESTIMATES, AND EMISSIONS ESTIMATES

A summary of the estimated performance resulting from heat and mass balance calculations are presented in Exhibit IX.2-2. Conceptual process flow diagrams of the major systems comprising the Syngas to Power Reference Plant are shown in Exhibit IX.2-3 through Exhibit IX.2-10. Estimated state point compositions and conditions for flow streams identified with numbers in the process flow diagrams are provided in Exhibit IX.2-12 through Exhibit IX.2-19.

The plant consumes about 95,409 lb/hr (1,118 MMBtu/hr - HHV) of Illinois #6 coal to produce a total of 135,606 lb/hr syngas and 23,702 lb/hr of low Btu tail gas for a combined total of about 1,002 MMBtu/hr (HHV) of clean, medium Btu syngas. Therefore, about 89.6% of the energy content of the coal is recovered in the syngas product. The syngas is used to fuel a syngas capable combustion turbine combined cycle system. The net electric power generated by the plant is estimated to be about 117 MWe after the plant auxiliary power requirements are met (133.5 MWe of gross electrical power minus 16.1 MWe auxiliary power required, excluding the ASU).[b] The HRSG in the combustion turbine combined cycle system also produces about 42,628 lb/hr of steam for the syngas production plant processes. About 3,000 lb/hr of elemental sulfur is produced as a co-product from the syngas cleanup system in the syngas production plant. About 13,787 lb/hr of slag is produced by the gasification process that may be sold as a product, depending on site specific factors. However, the Reference Plant evaluation assumes that the slag is sent to offsite non-hazardous waste disposal.

The overall net thermal efficiency of the Syngas to Power Reference Plant is estimated to be about 32.8%. The net plant thermal efficiency is defined in accordance with the DOE Quality Guidelines for Energy System Studies for power systems; that is, the net electrical energy divided by the total heating value energy of all direct and indirect input fuels. The direct fuels in this application are the coal to the gasifier and natural gas to the gasifier slag tap burner. The fuel used by an electric power generating plant to generate the power required for the ASU is considered and indirect fuel in this

[b] Performance estimate based on information that WorleyParsons has on GE 6FA performance when firing syngas and have not been verified by General Electric for the specific reference plant syngas

application since the oxygen and nitrogen for the syngas to power plant are purchased "over-the-fence" from a third party, and the cost of oxygen includes the cost of electric power for the ASU. In accordance with the DOE guidelines, a fuel energy-to-electrical energy conversion HHV efficiency of 32.8% was used for the ASU power required.

It should be emphasized that the application being studied is an Industrial size plant using a nominal 1,000 MMBtu/hr coal gasification system to refuel a single, small combustion turbine combined cycle producing about 133,500 kWe of net power. It should not be compared to the large utility size IGCCs that have been extensively evaluated and are currently being considered for commercial implementation. The small combustion turbine used in the industrial size application (GE 6FA) has a lower simple cycle heat rate than the large GE 7FA combustion turbines being considered for utility IGCC applications. Additionally, the small steam turbine cycle size (about 42MWe) associated with the industrial size plant is a non-reheat, moderate pressure (1,265 psia/950°F) cycle compared to the high pressure, reheat steam turbines being considered for the large utility IGCC applications (2,400 psia/1,000°F/1,000°F), and thus has a significantly lower steam cycle efficiency than the large utility IGCC cycles.

The annual capacity factor of the syngas production portion of the plant, defined as the plant annual syngas production divided by the rated output times 8,760 hours[c], is expected to be about 95% with the inclusion of the spare gasifier. Information published by The Dakota Gasification Company indicates that the Great Plains Synfuels Plant has successfully operated 14 Lurgi gasifiers without a spare while maintaining an annual plant loading as high as 92%.[d] That is, the plant annually produces up to 92% of its rated output capacity. Personnel with experience at the Great Plains Synfuels Plant indicate that corrosion issues in the boiler system, which uses H_2S-rich waste gas from the Rectisol Process as fuel, has historically cost the plant over 2% in availability. The Reference Plant conceptual design for this study sends the H_2S rich gas to a Claus Unit for recovery of sulfur, and uses clean gas from the Rectisol Process as the fuel in the fired boiler. It has also been indicated that because the Great Plains Synfuels Plant has been operating at

[c] Defined in accordance with DOE Quality Guidelines for Energy System Studies

[d] CO_2 Recovery and Sequestration at Dakota Gasification Company. Daren Eliason. 2004 Gasification Technologies Conference. October 4, 2004.

greater than design capacity, the resulting hydraulic overload of the gas liquor separation system and Phenosolvan system, and its impact on the plant cooling water system, has adversely affected annual plant capacity factor. The incorporation of a dedicated spare gasifier in the Reference Plant is expected to further increase the plant capacity factor over that achieved in the Great Plains Synfuels Plant.

When integrated with a combined cycle power system, the integrated syngas production and power generation plant annual capacity factor is expected to be about 92%.

Exhibit IX.2-2 Syngas to Power Plant Estimated Performance Summary

Production Figures (average)	
Combustion Turbine Net Power Output, MWe[a]	92.0
Steam Turbine Net Power Output, MWe	41.5
Total Combined Cycle Net Power Output, MWe	133.5
Total Syngas to Combustion Turbine, lb/hr (scfh x 10^6)[b]	126,063 (2.52)
Rectisol Tail Gas to Combustion Turbine, lb/hr (scfh x 10^6)	23,702 (0.26)
Energy Content of Total Syngas to Combustion Turbine (HHV), MMBtu/hr	934
Energy Content of Total Syngas to Combustion Turbine (LHV), MMBtu/hr	875
Syngas to HRSG, lb/hr (scfh x 10^6)	9,492 (0.19)
Energy Content of Syngas to HRSG (HHV), MMBtu/hr	67
Elemental Sulfur Product, lb/hr	2,999
Slag, lb/hr	13,787
Consumption Figures (average)	
Coal Thermal Input , MMBtu/hr (HHV)[c]	1,118
Coal Feed, lb/hr	95,409
Flux (Limestone) Feed, lb/hr	2,442
Oxygen to Gasifier and Claus Furnace, lb/hr	48,173
Nitrogen to Feed Lock Purge and Combustion Turbine, lb/hr	135,833
Cooling Makeup Water (excl. ASU), lb/hr	248,404
Process Makeup Water[d], lb/hr	164,772
Methanol, lb/hr	30
Natural Gas to Slag Tap Burner, lb/hr	140
Auxiliary Electric Power (excl. ASU), kWe	16,146
ASU Electric Power, kWe	9,700
ASU Cooling Makeup Water, lb/hr	27,100
Plant Equivalent Efficiency	
Fuel and Power Energy Input[e], MMBtu/hr	1222
Net Power Output, MMBtu/hr	400
Net Plant Thermal Efficiency, %	32.8
Estimated Emissions	
Combustion Turbine Combined Cycle	
SO_2, lb/MWh (lb/MMBtu)	0.04 (0.005)
NO_x, ppmvd@15% O_2 (lb/hr)[f]	15
CO, ppmvd@15% O_2 (lb/hr)[f]	25
Hg, lb/MWhr (lb/trillionBtu)[g]	<1x10^{-5} (<.001)
CO2, lb/MWh (lb/MMBtu)	1,894 (222)

Note a: Performance estimate based on information that WorleyParsons has on GE 6FA performance when firing syngas and has not been verified by General Electric for the specific reference plant syngas
Note b: Standard Conditions: 14.7 psia, 60°F
Note c: Based on Illinois #6 coal with HHV of 11,714 Btu/lb
Note d: A detailed optimization of water recycling in the plant was not performed. An optimization study may reduce the process water makeup requirement.
Note e: Coal energy plus natural gas energy plus ASU power expressed as fuel energy to utility power generation plant with HHV efficiency of 32.8%.
Note f: Without SCR or oxidation catalyst.
Note g: Based on Coal Hg content of 0.019 ppm and 90% or higher removal efficiency.

Exhibit IX.2-3 Gasification and Gas Cooling Conceptual Process Flow Diagram

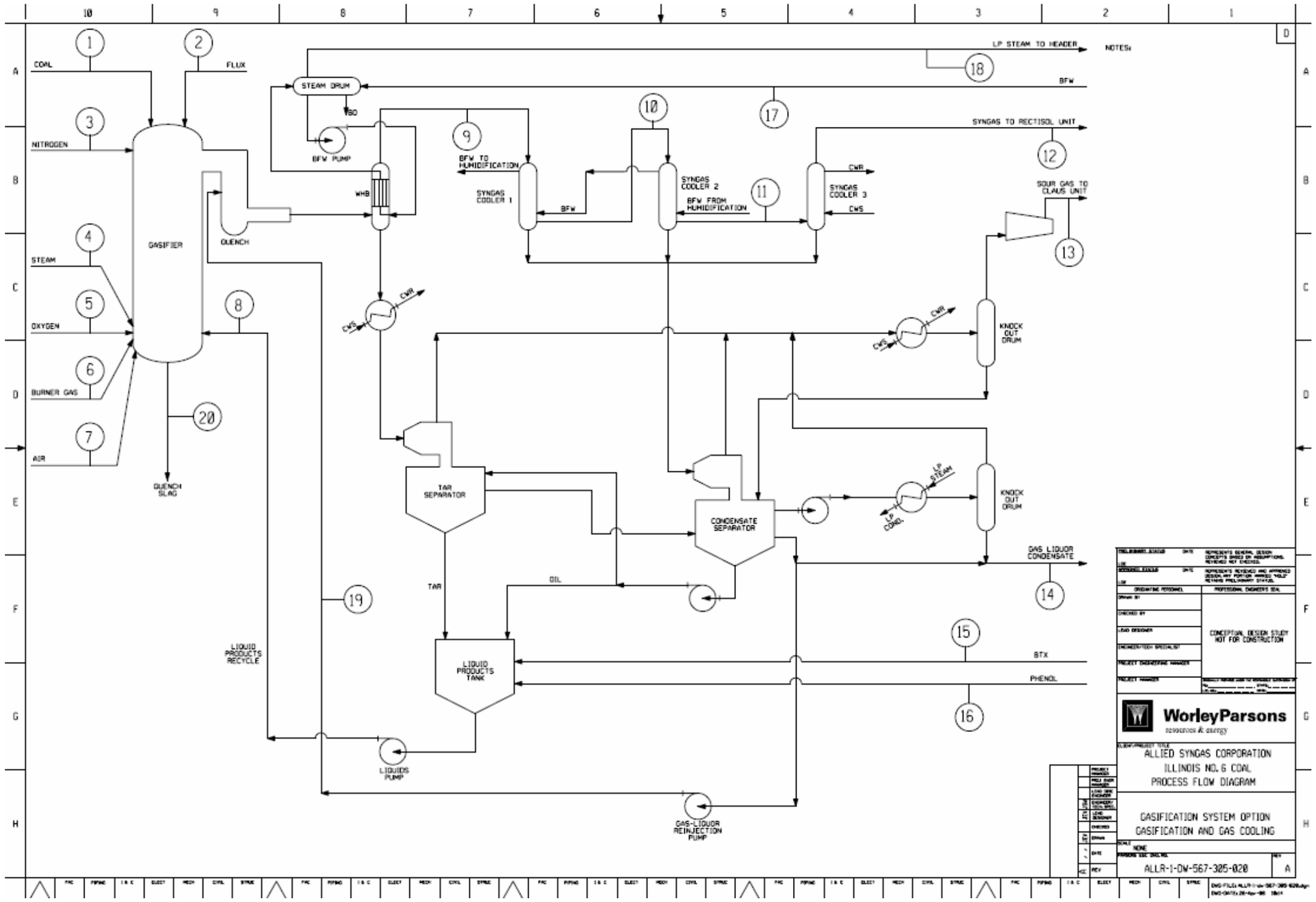

This page is intentionally left blank

Exhibit IX.2-4 Rectisol System Conceptual Process Flow Diagram

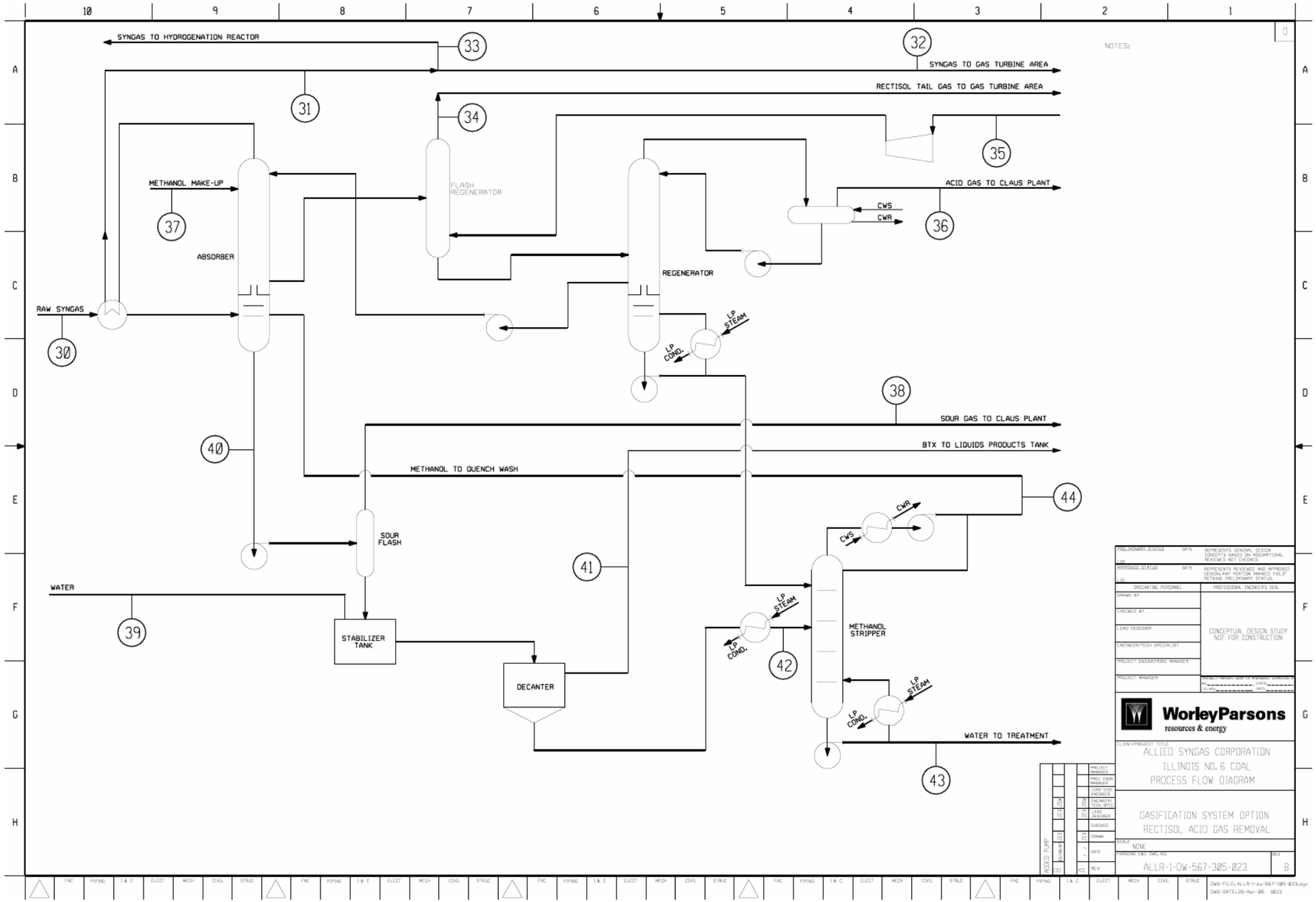

This page is intentionally left blank

Exhibit IX.2-5 Sulfur Production (Claus) System Conceptual Process Flow Diagram

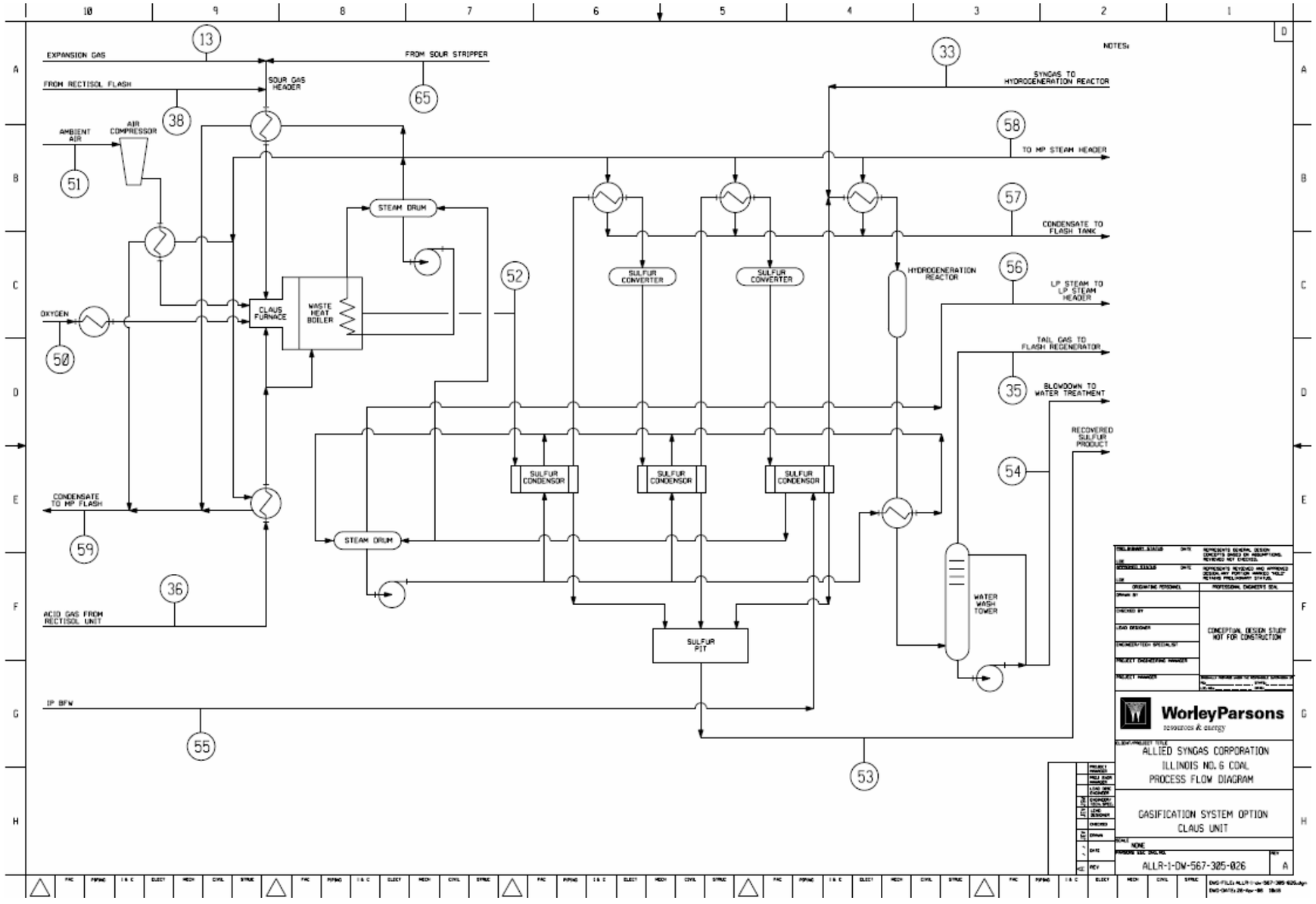

This page is intentionally left blank

Exhibit IX.2-6 Waste Water Treatment System Conceptual Process Flow Diagram

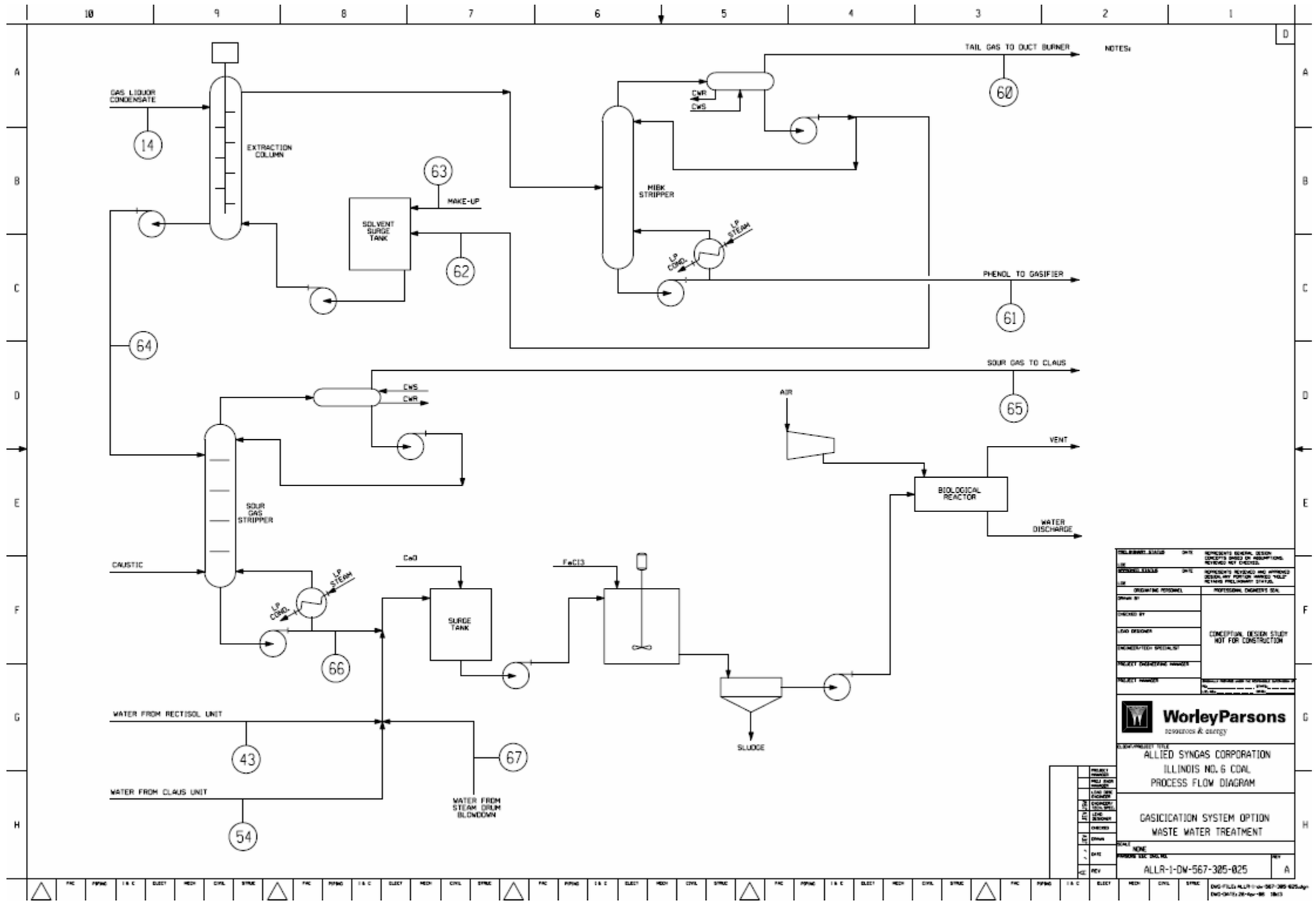

This page is intentionally left blank

Exhibit IX.2-7 Medium Pressure and Low Pressure Steam Circuit Conceptual Process Flow Diagram

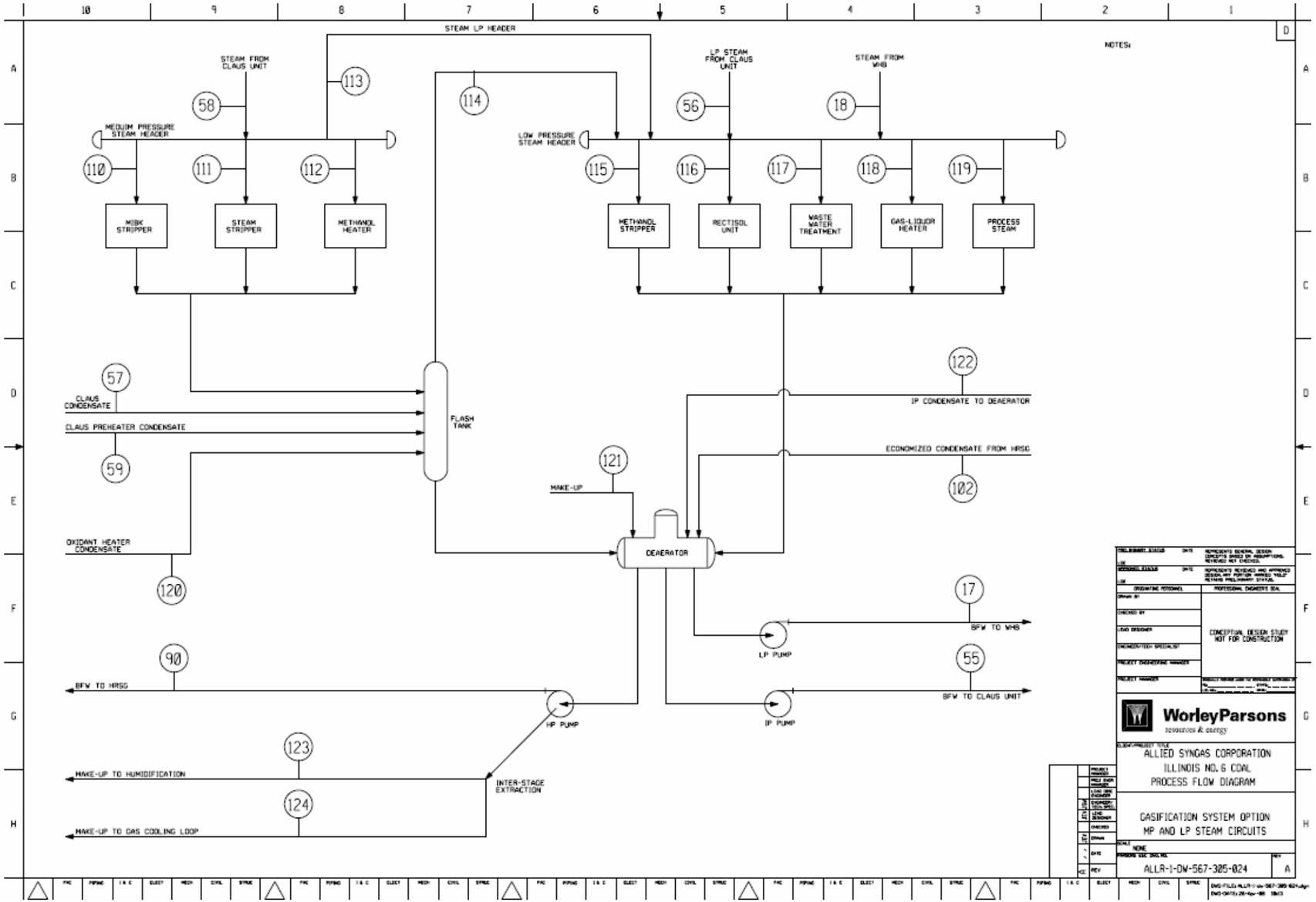

This page is intentionally left blank

Exhibit IX.2-8 Gas Cooling Loop Conceptual Process Flow Diagram

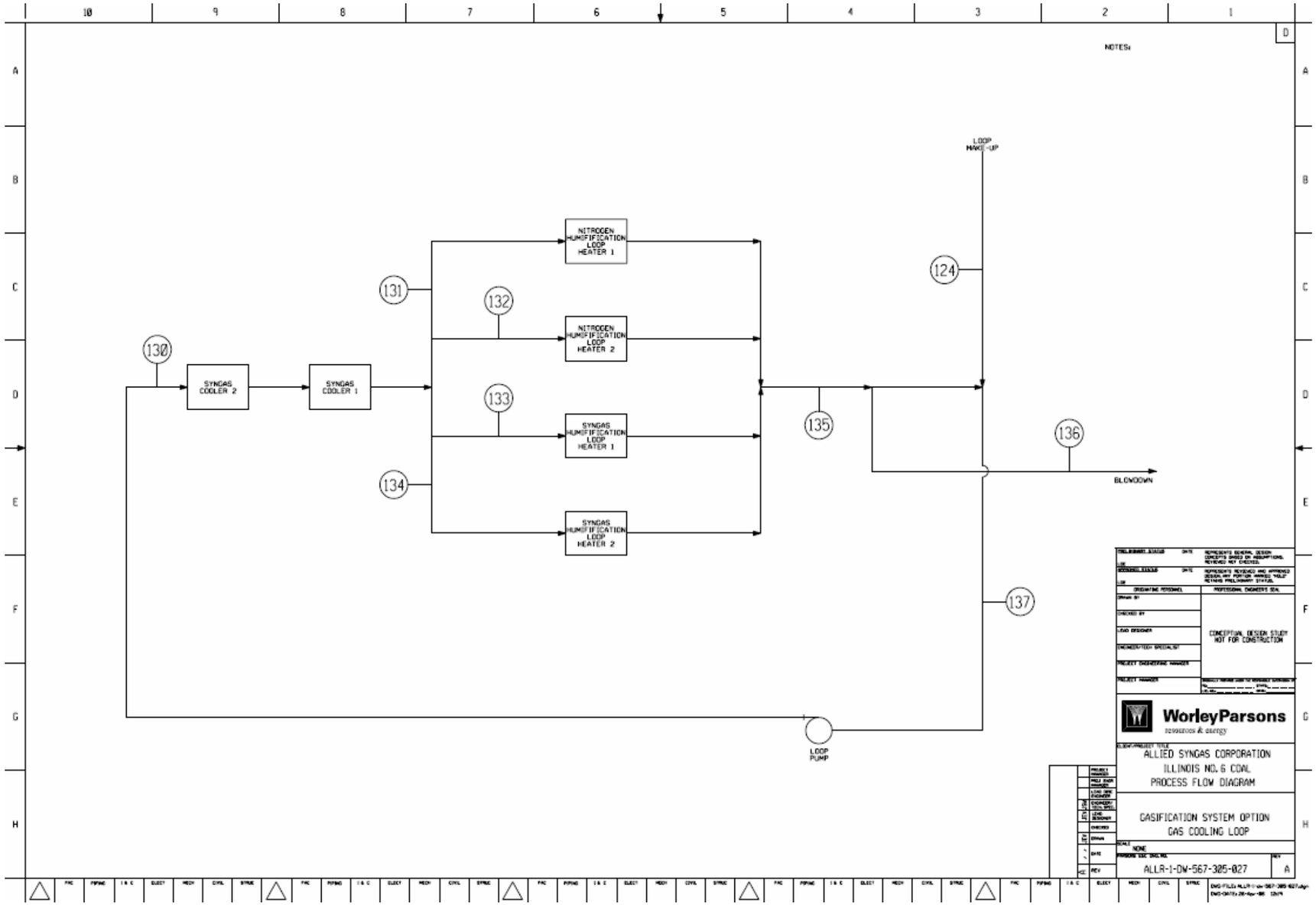

This page is intentionally left blank

Exhibit IX.2-9 Gas Turbine System Conceptual Process Flow Diagram

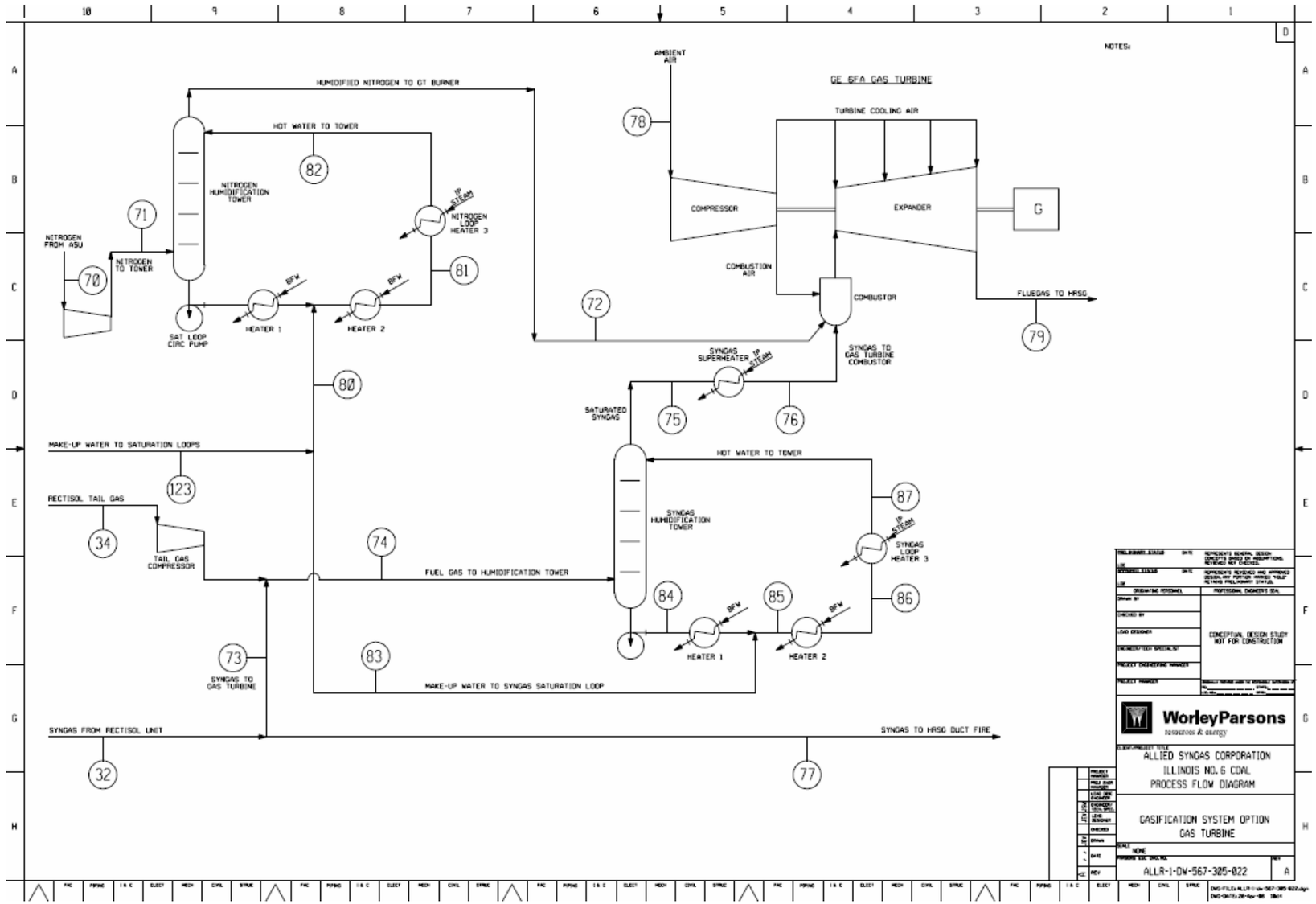

This page is intentionally left blank

Exhibit IX.2-10 Steam Turbine and HRSG Conceptual Process Flow Diagram

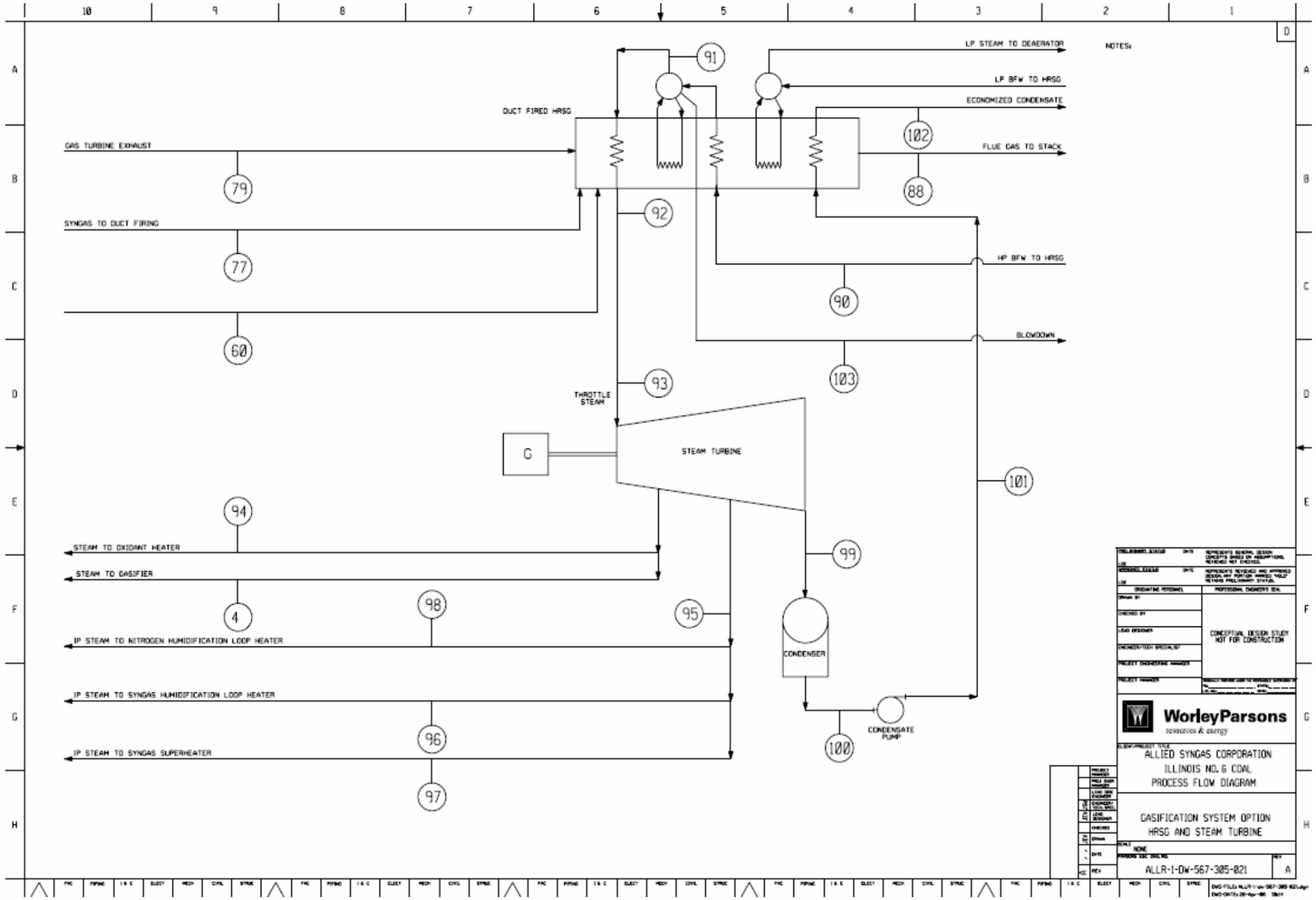

This page is intentionally left blank

Exhibit IX.2-11 Intermediate Pressure Steam Circuit Conceptual Process Flow Diagram

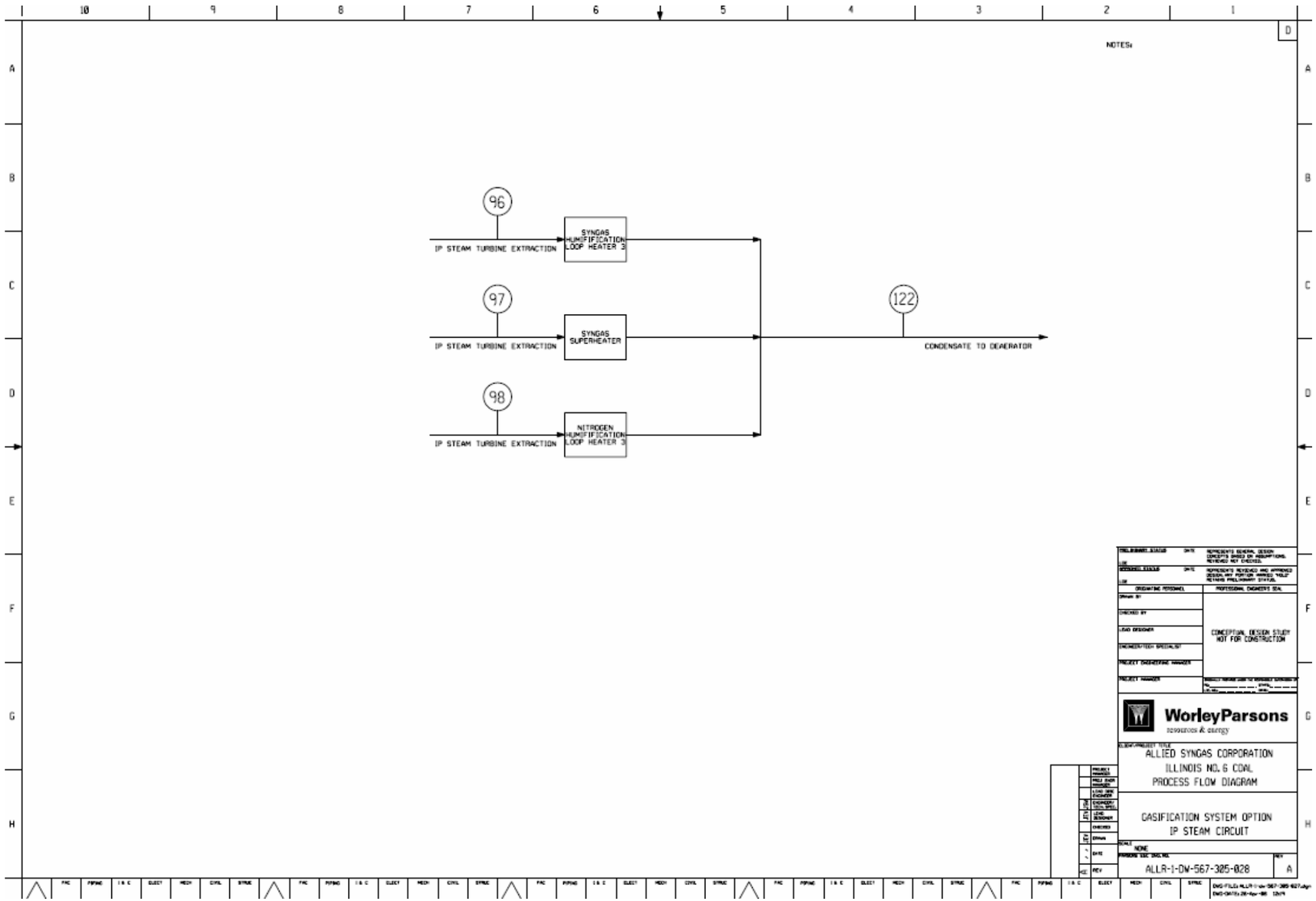

This page is intentionally left blank

Exhibit IX.2-12 Gasification and Gas Cooling Systems Estimated State Point Compositions and Conditions

Syngas to Power Option - Gasifier, Gas Cooling, and Gas Liquor Condensate Separation Material Balance (pg. 1 of 2)

STREAM	1		2		3		4		5		6		7		8		9		10	
Description	Coal to Gasifier		Flux to Gasifier		Purge Nitrogen		Steam to Gasifier		Oxygen to Gasifier		Burner Gas		Burner Air		Liquid Products Recycle		Raw Gas from WHB		Raw Gas From Cooler I	
Flow	lbmol/hr	lb/hr	lbmol/hr	lb/hr	lbmol/hr	lb/hr	lbmol/hr	lb/hr	lbmol/hr	lb/hr	lbmol/hr	lb/hr	lbmol/hr	lb/hr	lbmol/hr	lb/hr	lbmol/hr	lb/hr	lbmol/hr	lb/hr
AR	0.00	0.00	0.00	0.00	0.00	0.00	0.00	0.00	0.00	0.00	0.00	0.00	1.09	43.40	0.00	0.00	1.09	43.39	1.09	43.39
BTX	0.00	0.00	0.00	0.00	0.00	0.00	0.00	0.00	0.00	0.00	0.00	0.00	0.00	0.00	7.81	719.62	8.01	737.89	8.01	737.84
CH4	0.00	0.00	0.00	0.00	0.00	0.00	0.00	0.00	0.00	0.00	8.45	135.58	0.00	0.00	0.00	0.00	458.41	7354.33	458.40	7354.15
C2H4	0.00	0.00	0.00	0.00	0.00	0.00	0.00	0.00	0.00	0.00	0.02	0.60	0.00	0.00	0.00	0.00	3.65	102.43	3.65	102.42
C2H6	0.00	0.00	0.00	0.00	0.00	0.00	0.00	0.00	0.00	0.00	0.00	0.00	0.00	0.00	0.00	0.00	18.16	546.01	18.16	545.99
C3H6	0.00	0.00	0.00	0.00	0.00	0.00	0.00	0.00	0.00	0.00	0.02	0.90	0.00	0.00	0.00	0.00	1.47	61.92	1.47	61.91
C3H8	0.00	0.00	0.00	0.00	0.00	0.00	0.00	0.00	0.00	0.00	0.00	0.00	0.00	0.00	0.05	2.07	7.68	338.52	7.68	338.51
C4H8	0.00	0.00	0.00	0.00	0.00	0.00	0.00	0.00	0.00	0.00	0.00	0.00	0.00	0.00	0.05	2.81	1.14	63.96	1.14	63.96
C4H10	0.00	0.00	0.00	0.00	0.00	0.00	0.00	0.00	0.00	0.00	0.00	0.00	0.00	0.00	0.21	12.10	3.14	182.40	3.14	182.40
CH3OH	0.00	0.00	0.00	0.00	0.00	0.00	0.00	0.00	0.00	0.00	0.00	0.00	0.00	0.00	0.00	0.00	0.00	0.00	0.00	0.00
CO	0.00	0.00	0.00	0.00	0.00	0.00	0.00	0.00	0.00	0.00	0.00	0.00	0.00	0.00	0.00	0.00	4208.33	117875.42	4208.32	117874.93
CO2	0.00	0.00	0.00	0.00	0.00	0.00	0.00	0.00	0.00	0.00	0.02	0.76	0.00	0.00	0.99	43.57	332.33	14625.53	332.31	14624.44
COS	0.00	0.00	0.00	0.00	0.00	0.00	0.00	0.00	0.00	0.00	0.00	0.00	0.00	0.00	0.06	3.42	4.80	288.42	4.80	288.35
HCN	0.00	0.00	0.00	0.00	0.00	0.00	0.00	0.00	0.00	0.00	0.00	0.00	0.00	0.00	0.00	0.00	2.23	60.22	2.23	60.20
HCL	0.00	0.00	0.00	0.00	0.00	0.00	0.00	0.00	0.00	0.00	0.00	0.00	0.00	0.00	0.00	0.00	2.50	91.16	2.50	91.11
H2	0.00	0.00	0.00	0.00	0.00	0.00	0.00	0.00	0.00	0.00	0.00	0.00	0.00	0.00	0.00	0.00	2305.66	4648.21	2305.65	4648.18
H2O	0.00	0.00	0.00	0.00	0.00	0.00	1618.51	29157.55	0.00	0.00	0.00	0.00	0.00	0.00	0.03	0.56	2468.02	44461.33	1927.17	34718.00
H2S	0.00	0.00	0.00	0.00	0.00	0.00	0.00	0.00	0.00	0.00	0.00	0.00	0.00	0.00	0.46	15.51	89.34	3044.59	89.27	3042.29
MIBK	0.00	0.00	0.00	0.00	0.00	0.00	0.00	0.00	0.00	0.00	0.00	0.00	0.00	0.00	0.00	0.00	0.00	0.00	0.00	0.00
N2	0.00	0.00	0.00	0.00	157.39	4409.08	0.00	0.00	7.51	210.48	0.08	2.17	84.73	2373.68	0.00	0.00	287.43	8052.04	287.43	8052.00
NH3	0.00	0.00	0.00	0.00	0.00	0.00	0.00	0.00	0.00	0.00	0.00	0.00	0.00	0.00	0.00	0.00	0.00	0.00	0.00	0.00
O2	0.00	0.00	0.00	0.00	0.00	0.00	0.00	0.00	1495.14	47841.33	0.00	0.00	22.81	729.95	0.00	0.00	0.00	0.00	0.00	0.00
PHENOL	0.00	0.00	0.00	0.00	0.00	0.00	0.00	0.00	0.00	0.00	0.00	0.00	0.00	0.00	1.70	159.99	0.00	0.00	0.00	0.00
SO2	0.00	0.00	0.00	0.00	0.00	0.00	0.00	0.00	0.00	0.00	0.00	0.00	0.00	0.00	0.00	0.00	0.00	0.00	0.00	0.00
Mass Flow, lb/hr																				
Coal	95,409		0		0		0		0		0		0		0		0		0	
Flux	0		2442		0		0		0		0		0		0		0		0	
Oil	0		0		0		0		0		0		0		2099		0		0	
Slag	0		0		0		0		0		0		0		0		0		0	
Sulfur	0		0		0		0		0		0		0		0		0		0	
Tar	0		0		0		0		0		0		0		4902		0		0	
Total Flow lbmol/hr	n/a		n/a		157		1,619		1,503		9		109		n/a		10,203		9,662	
Total Flow lb/hr	95,409		2,442		4,409		29,158		48,053		140		3,147		7,960		202,580		192,832	
Total Flow cuft/hr	n/a		n/a		1,755		38,813		26,564		96		1,212		n/a		245,316		230,448	
Temperature F	60		60		60		680		392		60		60		100		311		297.7334	
Pressure psi	n/a		n/a		500		510		517		500		500		500		340		338	
Vapor Frac	n/a		n/a		1		1		1		1		1		0		1		1.0000	
Liquid Frac	n/a		n/a		0		0		0		0		0		1		0		0.0000	
Enthalpy Btu/lb	n/a		n/a		-118		-5,491		71		-1,959		-4		n/a		-2,530		-2,376	
Density lb/cuft	n/a		n/a		2.5116		0.7512		1.8089		1.4616		2.5973		n/a		0.8258		0.8368	
Average MW	n/a		n/a		28.0135		18.0153		31.9789		16.3016		28.9697		n/a		19.8542		19.9570	

This page is intentionally left blank

Exhibit IX.2-9 (cont'd) Gasification and Gas Cooling Systems Estimated State Point Compositions and Conditions

Syngas to Power Option - Gasifier, Gas Cooling, and Gas Liquor Condensate Separation Material Balance (pg. 2 of 2)

STREAM	11		12		13		14		15		16		17		18		19		20	
Description	Raw Gas From Cooler II		Syngas to Rectisol Unit		Sour Gas to Claus Unit		Gas Liquor Condensate		BTX to Gasifier		Phenol to Gasifier		BFW to Steam Drum		LP Steam to Header		Quench Water		Slag	
Flow	lbmol/hr	lb/hr	lbmol/hr	lb/hr	lbmol/hr	lb/hr	lbmol/hr	lb/hr	lbmol/hr	lb/hr	lbmol/hr	lb/hr	lbmol/hr	lb/hr	lbmol/hr	lb/hr	lbmol/hr	lb/hr	lbmol/hr	lb/hr
AR	1.09	43.39	1.09	43.39	0.00	0.01	0.00	0.00	0.00	0.00	0.00	0.00	0.00	0.00	0.00	0.00	0.00	0.00	0.00	0.00
BTX	8.01	737.82	8.01	737.85	0.00	0.00	0.00	0.19	7.81	719.65	0.00	0.00	0.00	0.00	0.00	0.00	0.00	0.00	0.00	0.00
CH4	458.39	7353.93	458.39	7354.02	0.03	0.44	0.03	0.47	0.00	0.02	0.00	0.00	0.00	0.00	0.00	0.00	0.00	0.00	0.00	0.00
C2H4	3.65	102.42	3.65	102.42	0.00	0.02	0.00	0.00	0.00	0.02	0.00	0.00	0.00	0.00	0.00	0.00	0.00	0.00	0.00	0.00
C2H6	18.16	545.97	18.16	545.98	0.00	0.09	0.00	0.00	0.01	0.21	0.00	0.00	0.00	0.00	0.00	0.00	0.00	0.00	0.00	0.00
C3H6	1.47	61.91	1.47	61.91	0.00	0.01	0.00	0.00	0.01	0.37	0.00	0.00	0.00	0.00	0.00	0.00	0.00	0.00	0.00	0.00
C3H8	7.68	338.51	7.68	338.51	0.00	0.02	0.00	0.00	0.05	2.07	0.00	0.00	0.00	0.00	0.00	0.00	0.00	0.00	0.00	0.00
C4H8	1.14	63.96	1.14	63.96	0.00	0.00	0.00	0.00	0.05	2.81	0.00	0.00	0.00	0.00	0.00	0.00	0.00	0.00	0.00	0.00
C4H10	3.14	182.40	3.14	182.40	0.00	0.00	0.00	0.00	0.21	12.10	0.00	0.00	0.00	0.00	0.00	0.00	0.00	0.00	0.00	0.00
CH3OH	0.00	0.00	0.00	0.00	0.00	0.00	0.00	0.00	0.00	0.00	0.00	0.00	0.00	0.00	0.00	0.00	0.00	0.00	0.00	0.00
CO	4208.30	117874.43	4208.31	117874.74	0.08	2.20	0.01	0.24	0.00	0.00	0.00	0.00	0.00	0.00	0.00	0.00	0.00	0.00	0.00	0.00
CO2	332.26	14622.32	332.26	14622.44	1.56	68.82	3.65	160.58	0.99	43.57	0.00	0.00	0.00	0.00	0.00	0.00	0.00	0.00	0.00	0.00
COS	4.80	288.22	4.80	288.24	0.00	0.14	0.00	0.28	0.06	3.42	0.00	0.00	0.00	0.00	0.00	0.00	0.00	0.00	0.00	0.00
HCN	2.23	60.16	2.23	60.16	0.00	0.02	0.00	0.08	0.00	0.00	0.00	0.00	0.00	0.00	0.00	0.00	0.00	0.00	0.00	0.00
HCL	2.50	90.99	0.00	0.00	0.00	0.00	2.50	91.28	0.00	0.00	0.00	0.00	0.00	0.00	0.00	0.00	0.00	0.00	0.00	0.00
H2	2305.63	4648.15	2305.64	4648.17	0.04	0.09	0.02	0.04	0.00	0.00	0.00	0.00	0.00	0.00	0.00	0.00	0.00	0.00	0.00	0.00
H2O	333.98	6016.60	18.52	333.72	0.41	7.45	606.00	10917.02	0.03	0.56	0.00	0.00	1016.08	18304.72	995.76	17938.62	3530.19	63596.32	0.00	0.00
H2S	89.07	3035.46	89.03	3034.15	0.06	2.15	0.45	15.33	0.46	15.51	0.00	0.00	0.00	0.00	0.00	0.00	0.00	0.00	0.00	0.00
MIBK	0.00	0.00	0.00	0.00	0.00	0.00	0.00	0.00	0.00	0.00	0.00	0.00	0.00	0.00	0.00	0.00	0.00	0.00	0.00	0.00
N2	287.43	8051.96	287.43	8051.99	0.01	0.21	0.00	0.00	0.00	0.00	0.00	0.00	0.00	0.00	0.00	0.00	0.00	0.00	0.00	0.00
NH3	0.00	0.00	0.00	0.00	0.00	0.00	9.14	155.58	0.00	0.00	0.00	0.00	0.00	0.00	0.00	0.00	0.00	0.00	0.00	0.00
O2	0.00	0.00	0.00	0.00	0.00	0.00	0.00	0.00	0.00	0.00	0.00	0.00	0.00	0.00	0.00	0.00	0.00	0.00	0.00	0.00
PHENOL	0.00	0.00	0.00	0.00	0.00	0.00	1.71	160.93	0.00	0.00	1.70	159.95	0.00	0.00	0.00	0.00	0.00	0.00	0.00	0.00
SO2	0.00	0.00	0.00	0.00	0.00	0.00	0.00	0.00	0.00	0.00	0.00	0.00	0.00	0.00	0.00	0.00	0.00	0.00	0.00	0.00
Mass Flow, lb/hr																				
Coal	0		0		0		0		0		0		0		0		0		0	
Flux	0		0		0		0		0		0		0		0		0		0	
Oil	0		0		0		0		0		0		0		0		0		0	
Slag	0		0		0		0		0		0		0		0		0		13787	
Sulfur	0		0		0		0		0		0		0		0		0		0	
Tar	0		0		0		0		0		0		0		0		0		0	
Total Flow lbmol/hr	8,069		7,751		2		624		10		2		1,016		996		3,530		n/a	
Total Flow lb/hr	164,120		158,346		82		11,502		801		160		18,305		17,939		63,597		13,787	
Total Flow cuft/hr	172,707		138,213		45		202		15		3		310		104,331		1,101		n/a	
Temperature F	208		95		95		65		40		315.591836		240.274759		307.588714		100		n/a	
Pressure psi	335		333		35		25		20		15		150		75		500		n/a	
Vapor Frac	1		1		1		0		0		0		0		1		0		n/a	
Liquid Frac	0		0		0		1		1		1		1		0		1		n/a	
Enthalpy Btu/lb	-1,829		-1,731		-3,840		-6,432		-214		-584		-6,657		-5,685		-6,754		n/a	
Density lb/cuft	0.9503		1.1457		1.8231		57.0509		54.8956		59.7737		59.1007		18.0153		57.7405		n/a	
Average MW	20.3399		20.4293		37.0266		18.4475		82.7183		94.1130		18.0153		282.6288		18.0153		n/a	

5/23/2006 23:11

This page is intentionally left blank

Exhibit IX.2-13 Rectisol System Estimated State Point Compositions and Conditions

Syngas to Power Option - Rectisol Acid Gas Removal Material Balance (pg. 1 of 2)

STREAM	30		31		32		33		34		35		36	
Description	Raw Syngas to Rectisol Absorber		Syngas Out Rectisol Absorber		Syngas to Gas Turbine Area		Syngas to Hydrogenation Reactor		Rectisol Tail Gas to Gas Turbine Area		Tail Gas From Claus Plant		Acid Gas to Claus Plant	
Flow	lbmol/hr	lb/hr	lbmol/hr	lb/hr	lbmol/hr	lb/hr	lbmol/hr	lb/hr	lbmol/hr	lb/hr	lbmol/hr	lb/hr	lbmol/hr	lb/hr
AR	1.09	43.39	1.06	42.2	1.06	42.1	0.00	0.02	2.22	88.75	2.21	88.43	0.02	0.90
BTX	8.01	737.9	0.12	10.94	0.12	10.94	0.00	0.00	0.04	3.65	0.00	0.00	0.00	0.00
CH4	458.39	7,354	421.48	6,762	421.32	6,759	0.16	2.49	36.36	583.25	0.07	1.17	0.37	5.89
C2H4	3.65	102.4	1.96	55.06	1.96	55.0	0.00	0.02	1.67	46.91	0.00	0.00	0.00	0.00
C2H6	18.16	546.0	9.91	297.9	9.90	297.8	0.00	0.11	8.11	243.78	0.00	0.02	0.00	0.00
C3H6	1.47	61.91	0.20	8.36	0.20	8.36	0.00	0.00	1.22	51.36	0.00	0.00	0.00	0.00
C3H8	7.68	338.5	3.82	168.27	3.81	168.2	0.00	0.06	3.52	155.33	0.00	0.01	0.00	0.00
C4H8	1.14	63.96	0.01	0.5	0.01	0.53	0.00	0.00	0.94	52.92	0.00	0.00	0.00	0.00
C4H10	3.14	182.4	0.19	11.09	0.19	11.1	0.00	0.00	2.32	134.87	0.00	0.00	0.00	0.00
CH3OH	0.00	0.00	0.00	0.00	0.00	0.00	0.00	0.00	0.00	0.00	0.00	0.00	1.41	45.28
CO	4,208.31	117,875	4,114.92	115,259	4,113.41	115,216	1.52	42.50	111.61	3,126.3	20.18	565.2	1.13	31.58
CO2	332.26	14,622	9.47	416.6	9.46	416	0.00	0.2	320.82	14,119	89.98	3,960	75.25	3,311.84
COS	4.80	288.2	0.00	0.00	0.00	0.00	0.00	0.00	0.00	0.25	0.53	31.8	5.17	310.56
HCN	2.23	60.16	0.00	0.00	0.00	0.00	0.00	0.00	0.00	0.00	0.00	0.00	0.00	0.08
HCL	0.00	0.00	0.00	0.00	0.00	0.00	0.00	0.00	0.00	0.00	0.00	0.00	0.00	0.00
H2	2,305.64	4,648	2,298.70	4,634	2,297.86	4,632	0.85	1.71	14.66	29.56	7.79	15.70	0.04	0.09
H2O	18.52	333.72	0.00	0.00	0.00	0.00	0.00	0.00	0.00	0.0	19.00	342.3	19.03	342.84
H2S	89.03	3,034	0.03	0.90	0.03	0.90	0.00	0.00	0.05	1.6	4.07	139	91.77	3,127.65
MIBK	0.00	0.00	0.00	0.00	0.00	0.00	0.00	0.00	0.00	0.00	0.00	0.00	0.00	0.00
N2	287.43	8,052	283.35	7,938	283.25	7,935	0.10	2.93	180.76	5,064	177.28	4,966.43	0.54	15.24
NH3	0.00	0.00	0.00	0.00	0.00	0.00	0.00	0.00	0.00	0.00	0.00	0.00	0.00	0.00
O2	0.00	0.00	0.00	0.00	0.00	0.00	0.00	0.00	0.00	0.00	0.00	0.00	0.00	0.00
PHENOL	0.00	0.00	0.00	0.00	0.00	0.00	0.00	0.00	0.00	0.00	0.00	0.00	0.00	0.00
SO2	0.00	0.00	0.00	0.00	0.00	0.00	0.00	0.00	0.00	0.00	0.00	0.00	0.00	0.00
Total Flow lbmol/hr	7,751	7,751	7,145		7,143		3		684		321		195	
Total Flow lb/hr	158,346		135,606		135,556		50		23,702		10,110		7,192	
Total Flow cuft/hr	138,213		139,444		139,393		51		136,373		96,095		34,740	
Temperature F	95		80		80		80		100		113		90	
Pressure psi	333		297		297		297		30		21		30	
Vapor Frac	1		1		1		1		1		1		1	
Liquid Frac	0		0		0		0		0		0		0	
Enthalpy Btu/lb	-1,731		-1,558		-1,558		-1,558		-2,580		-1,795		-2,269	
Density lb/cuft	1.1457		0.9725		0.9725		0.9725		0.1738		0.1052		0.2070	
Average MW	20.4292		18.9786		18.9786		18.9786		34.6356		31.4829		36.9306	

5/23/2006 0:00

This page is intentionally left blank

Exhibit IX.2-13 (Cont'd) Rectisol System Estimated State Point Compositions and Conditions

Syngas to Power Option - Rectisol Acid Gas Removal Material Balance (pg. 2 of 2)

STREAM	37		38		39		40		41		41	
Description	Methanol Make-Up		Sour Gas to Claus Plant		Water to Stabilizer Tank		Pre-Wash From Rectisol Absorber		BTX to Liquid Products Tank		Methanol to Stripper	
Flow	lbmol/hr	lb/hr	lbmol/hr	lb/hr	lbmol/hr	lb/hr	lbmol/hr	lb/hr	lbmol/hr	lb/hr	lbmol/hr	lb/hr
AR	0.00	0.00	0.00	0.01	0.00	0.00	0.00	0.01	0.00	0.00	0.00	0.00
BTX	0.00	0.00	0.04	4.1	0.00	0.0	7.85	723.26	7.80	719.15	0.00	0.00
CH4	0.00	0.00	0.27	4.3	0.00	0.0	0.27	4.32	0.00	0.01	0.00	0.00
C2H4	0.00	0.00	0.02	0.4	0.00	0.0	0.02	0.45	0.00	0.01	0.00	0.00
C2H6	0.00	0.00	0.14	4.1	0.00	0.0	0.14	4.29	0.01	0.17	0.00	0.00
C3H6	0.00	0.00	0.04	1.9	0.00	0.0	0.05	2.19	0.01	0.33	0.00	0.00
C3H8	0.00	0.00	0.30	13.1	0.00	0.0	0.34	14.92	0.04	1.80	0.00	0.00
C4H8	0.00	0.00	0.13	7.2	0.00	0.0	0.19	10.51	0.06	3.31	0.00	0.00
C4H10	0.00	0.00	0.45	26.4	0.00	0.0	0.63	36.44	0.17	10.07	0.00	0.00
CH3OH	1.76	56.49	0.01	0.3	0.00	0.0	16.59	531.47	0.02	0.53	16.56	530.62
CO	0.00	0.00	0.82	23.0	0.00	0.0	0.82	23.01	0.00	0.01	0.00	0.00
CO2	0.00	0.00	15.71	691.3	0.00	0.0	16.71	735.19	1.00	43.87	0.00	0.00
COS	0.00	0.00	0.11	6.3	0.00	0.0	0.15	9.22	0.05	2.90	0.00	0.00
HCN	0.00	0.00	2.22	60.0	0.00	0.0	0.00	0.04	0.00	0.04	0.00	0.00
HCL	0.00	0.00	0.00	0.0	0.00	0.0	0.00	0.00	0.00	0.00	0.00	0.00
H2	0.00	0.00	0.02	0.0	0.00	0.0	0.02	0.04	0.00	0.00	0.00	0.00
H2O	0.00	0.00	0.01	0.2	15.00	270.2	18.50	333.20	0.03	0.60	33.45	602.62
H2S	0.00	0.00	0.73	24.9	0.00	0.0	1.25	42.71	0.52	17.82	0.00	0.00
MIBK	0.00	0.00	0.00	0.0	0.00	0.0	0.00	0.00	0.00	0.00	0.00	0.00
N2	0.00	0.00	0.05	1.4	0.00	0.0	0.05	1.42	0.00	0.00	0.00	0.00
NH3	0.00	0.00	0.00	0.0	0.00	0.0	0.00	0.00	0.00	0.00	0.00	0.00
O2	0.00	0.00	0.00	0.0	0.00	0.0	0.00	0.00	0.00	0.00	0.00	0.00
PHENOL	0.00	0.00	0.00	0.0	0.00	0.0	0.00	0.00	0.00	0.00	0.00	0.00
SO2	0.00	0.00	0.00	0.0	0.00	0.0	0.00	0.00	0.00	0.00	0.00	0.00
Total Flow lbmol/hr	2		21		15		64		10		50	
Total Flow lb/hr	56		869		270		2,473		801		1,133	
Total Flow cuft/hr	1		2,483		4		41		15		21	
Temperature F	140		-15		100		-4		40		135	
Pressure psi	50		35		20		330		20		55	
Vapor Frac	0		1		0		0		0		0	
Liquid Frac	1		0		1		1		1		1	
Enthalpy Btu/lb	-3,195		-3,085		-6,842		-2,954		-214		-5,122	
Density lb/cuft	47.1089		0.3501		61.2486		60.3657		54.9296		52.9625	
Average MW	32.0422		41.2551		18.0153		38.8983		82.4300		22.6600	

5/23/2006 0:00

This page is intentionally left blank

Exhibit IX.2-14 Sulfur Production (Claus) System Estimated State Point Compositions and Conditions

Syngas to Power Option - Claus Unit Material Balance

STREAM	50		51		52		53		54		55		56		57		58		59	
Description	Oxygen to Claus Furnace		Air to Claus Furnace		Claus Gas Out WHB		Sulfur Product		Blowdown to Water Treatment		IP BFW from Deaerator		LP Steam to LP Steam Header		Condensate to Flash Tank		MP Steam to MP Steam Header		Condensate to Flash Tank	
Flow	lbmol/hr	lb/hr	lbmol/hr	lb/hr	lbmol/hr	lb/hr	lbmol/hr	lb/hr	lbmol/hr	lb/hr	lbmol/hr	lb/hr	lbmol/hr	lb/hr	lbmol/hr	lb/hr	lbmol/hr	lb/hr	lbmol/hr	lb/hr
AR	0.00	0.00	2.19	87.51	2.21	88.43	0.00	0.00	0.00	0.00	0.00	0.00	0.00	0.00	0.00	0.00	0.00	0.00	0.00	0.00
BTX	0.00	0.00	0.00	0.00	0.00	0.00	0.00	0.00	0.00	0.00	0.00	0.00	0.00	0.00	0.00	0.00	0.00	0.00	0.00	0.00
CH4	0.00	0.00	0.00	0.00	0.22	3.53	0.00	0.00	0.00	0.00	0.00	0.00	0.00	0.00	0.00	0.00	0.00	0.00	0.00	0.00
C2H4	0.00	0.00	0.00	0.00	0.00	0.00	0.00	0.00	0.00	0.00	0.00	0.00	0.00	0.00	0.00	0.00	0.00	0.00	0.00	0.00
C2H6	0.00	0.00	0.00	0.00	0.00	0.00	0.00	0.00	0.00	0.00	0.00	0.00	0.00	0.00	0.00	0.00	0.00	0.00	0.00	0.00
C3H6	0.00	0.00	0.00	0.00	0.00	0.00	0.00	0.00	0.00	0.00	0.00	0.00	0.00	0.00	0.00	0.00	0.00	0.00	0.00	0.00
C3H8	0.00	0.00	0.00	0.00	0.00	0.00	0.00	0.00	0.00	0.00	0.00	0.00	0.00	0.00	0.00	0.00	0.00	0.00	0.00	0.00
C4H8	0.00	0.00	0.00	0.00	0.00	0.00	0.00	0.00	0.00	0.00	0.00	0.00	0.00	0.00	0.00	0.00	0.00	0.00	0.00	0.00
C4H10	0.00	0.00	0.00	0.00	0.00	0.00	0.00	0.00	0.00	0.00	0.00	0.00	0.00	0.00	0.00	0.00	0.00	0.00	0.00	0.00
CH3OH	0.00	0.00	0.00	0.00	0.00	0.00	0.00	0.00	0.00	0.00	0.00	0.00	0.00	0.00	0.00	0.00	0.00	0.00	0.00	0.00
CO	0.00	0.00	0.00	0.00	18.35	513.88	0.00	0.00	0.00	0.00	0.00	0.00	0.00	0.00	0.00	0.00	0.00	0.00	0.00	0.00
CO2	0.00	0.00	0.00	0.00	86.91	3824.66	0.00	0.00	0.00	0.04	0.00	0.00	0.00	0.00	0.00	0.00	0.00	0.00	0.00	0.00
COS	0.00	0.00	0.00	0.00	3.69	221.57	0.00	0.00	0.00	0.00	0.00	0.00	0.00	0.00	0.00	0.00	0.00	0.00	0.00	0.00
HCN	0.00	0.00	0.00	0.00	0.00	0.05	0.00	0.05	0.00	0.00	0.00	0.00	0.00	0.00	0.00	0.00	0.00	0.00	0.00	0.00
HCL	0.00	0.00	0.00	0.00	0.00	0.00	0.00	0.00	0.00	0.00	0.00	0.00	0.00	0.00	0.00	0.00	0.00	0.00	0.00	0.00
H2	0.00	0.00	0.00	0.00	10.93	22.03	0.00	0.00	0.00	0.00	0.00	0.00	0.00	0.00	0.00	0.00	0.00	0.00	0.00	0.00
H2O	0.00	0.00	0.00	0.00	121.67	2191.91	0.00	0.00	124.43	2241.67	732.90	13203.25	259.61	4676.90	163.87	2952.08	84.78	1527.32	224.36	4041.80
H2S	0.00	0.00	0.00	0.00	20.94	713.70	0.00	0.00	0.00	0.03	0.00	0.00	0.00	0.00	0.00	0.00	0.00	0.00	0.00	0.00
MIBK	0.00	0.00	0.00	0.00	0.00	0.00	0.00	0.00	0.00	0.00	0.00	0.00	0.00	0.00	0.00	0.00	0.00	0.00	0.00	0.00
N2	0.04	1.05	170.87	4786.84	177.18	4963.56	0.00	0.00	0.00	0.00	0.00	0.00	0.00	0.00	0.00	0.00	0.00	0.00	0.00	0.00
NH3	0.00	0.00	0.00	0.00	0.00	0.00	0.00	0.00	0.00	0.00	0.00	0.00	0.00	0.00	0.00	0.00	0.00	0.00	0.00	0.00
O2	3.72	118.95	46.00	1472.04	0.00	0.00	0.00	0.00	0.00	0.00	0.00	0.00	0.00	0.00	0.00	0.00	0.00	0.00	0.00	0.00
PHENOL	0.00	0.00	0.00	0.00	0.00	0.00	0.00	0.00	0.00	0.00	0.00	0.00	0.00	0.00	0.00	0.00	0.00	0.00	0.00	0.00
SO2	0.00	0.00	0.00	0.00	12.42	795.90	0.00	0.00	0.00	0.00	0.00	0.00	0.00	0.00	0.00	0.00	0.00	0.00	0.00	0.00
S2	0.00	0.00	0.00	0.00	0.11	6.80	0.00	0.00	0.00	0.00	0.00	0.00	0.00	0.00	0.00	0.00	0.00	0.00	0.00	0.00
S6	0.00	0.00	0.00	0.00	2.54	488.52	0.00	0.00	0.00	0.00	0.00	0.00	0.00	0.00	0.00	0.00	0.00	0.00	0.00	0.00
S8	0.00	0.00	0.00	0.00	5.74	1473.06	11.72	3005.63	0.00	0.00	0.00	0.00	0.00	0.00	0.00	0.00	0.00	0.00	0.00	0.00
Total Flow lbmol/hr	4		219		463		12		124		733		260		164		85		224	
Total Flow lb/hr	120		6,346		15,308		3,006		2,242		13,203		4,677		2,952		1,527		4,042	
Total Flow cuft/hr	737		83,054		195,362		10		37		223		27,119		60		1,057		80	
Temperature F	90		60		650		311		113		242		308		494		497		471	
Pressure psi	30		15		28		25		21		841		75		645		665		655	
Vapor Frac	1.0		1.0		1.0		0.0		0.0		0.0		1.0		0.0		1.0		0.0	
Liquid Frac	0.0		0.0		0.0		1.0		1.0		1.0		0.0		1.0		0.0		1.0	
Enthalpy Btu/lb	3		-4		-1,800		53		-6,827		-6,655		-5,687		-6,386		-5,664		-6,412	
Density lb/cuft	0.1628		0.0764		0.0784		316.1797		60.7975		59.2168		0.1725		49.2567		1.4454		50.4990	
Average MW	31.9590		28.9697		33.0687		256.4951		18.0156		18.0153		18.0153		18.0153		18.0153		18.0153	

5/23/2006

This page is intentionally left blank

Exhibit IX.2-15 Waste Water Treatment System Estimated State Point Compositions and Conditions

Syngas to Power Option - Waste Water Treatment Material Balance

STREAM	60		61		62		63		64		65		66		67	
Description	Tail Gas to Duct Burner		Recovered Phenol to Gasifier		MIBK Recycle		MIBK Make-Up		De-phenolated Condensate to Stripper		Sour Gas to Claus		Condensate to Metals Treating		Steam Drum Blowdown	
Flow	lbmol/hr	lb/hr	lbmol/hr	lb/hr	lbmol/hr	lb/hr	lbmol/hr	lb/hr	lbmol/hr	lb/hr	lbmol/hr	lb/hr	lbmol/hr	lb/hr	lbmol/hr	lb/hr
AR	0	0	0	0	0	0	0	0	0	0	0	0	0	0	0	0
BTX	0.00	0.00	0.00	0.00	0.00	0.19	0.0000	0.0000	0.00	0.00	0	0	0	0	0	0
CH4	0.02	0.39	0.00	0.00	0.01	0.09	0.0000	0.0000	0.00	0.00	0	0	0	0	0	0
C2H4	0	0	0	0	0	0	0	0	0	0	0	0	0	0	0	0
C2H6	0	0	0	0	0	0	0	0	0	0	0	0	0	0	0	0
C3H6	0	0	0	0	0	0	0	0	0	0	0	0	0	0	0	0
C3H8	0	0	0	0	0	0	0	0	0	0	0	0	0	0	0	0
C4H8	0	0	0	0	0	0	0	0	0	0	0	0	0	0	0	0
C4H10	0	0	0	0	0	0	0	0	0	0	0	0	0	0	0	0
CH3OH	0	0	0	0	0	0	0	0	0	0	0	0	0	0	0	0
CO	0	0	0	0	0	0	0	0	0.01	0.24	0.01	0.24	0	0	0	0
CO2	0	0	0	0	0	0	0	0	3.65	160.6	3.65	160.6	0	0	0	0
COS	0	0	0	0	0	0	0	0	0.00	0.28	0.00	0.28	0	0	0	0
HCN	0	0	0	0	0	0	0	0	0.00	0.08	0.00	0.08	0	0	0	0
HCL	0	0	0	0	0	0	0	0	2.50	91.28	0	0	2.50	91.28	0	0
H2	0	0	0	0	0	0	0	0	0.02	0.04	0.02	0.04	0	0	0	0
H2O	0.05	0.92	0.00	0.00	0.47	8.50	0.0000	0.0000	605.47	10,908	19.55	352.1	585.93	10,555	75	1344.9791
H2S	0	0	0	0	0	0	0	0	0.45	15.33	0.45	15.33	0	0	0	0
MIBK	0.10	10.36	0.00	0.00	11.82	1,184	0.01	0.70	0.00	0.00	0.00	0.00	0	0	0	0
N2	0	0	0	0	0	0	0	0	0	0	0	0	0	0	0	0
NH3	0.01	0.18	0.00	0.00	0.02	0.29	0	0	9.11	155.1	9.09	154.8	0.02	0.31	0	0
O2	0	0	0	0	0	0	0	0	0	0	0	0	0	0	0	0
PHENOL	0.00	0.00	1.70	160.2	0.01	0.58	0	0	0.00	0.00	0.00	0.00	0	0	0	0
SO2	0	0	0	0	0	0	0	0	0	0	0	0	0	0	0	0
Total Flow lbmol/hr	0.19		1.70		12.33		0.01		621.22		32.77		588.45		74.66	
Total Flow lb/hr	11.96		160.24		1,194.00		0.70		11,330.72		683.51		10,647.21		1,345.00	
Total Flow cuft/hr	89.81		2.68		33.80		0.01		2,724.15		3,874.17		1,725.09		9,614.52	
Temperature F	210		313		210		100		69		210		246		458.81	
Pressure psi	14.9		15.0		15.0		25.0		15.0		35.0		38.0		75.00	
Vapor Frac	1		0		0		0		0		1		0		1.00	
Liquid Frac	0		1		1		1		1		0		1		0.00	
Enthalpy Btu/lb	-1,545		-585		-1,367		-1,388		-6,710		-4,450		-6,625		-5,605.49	
Density lb/cuft	0.1332		59.8696		35.3251		48.7603		4.1594		0.1764		6.1720		0.14	
Average MW	62.8262		94.1130		96.8594		100.1607		18.2395		20.8571		18.0937		18.02	

5/23/2006

This page is intentionally left blank

Exhibit IX.2-16 Medium Pressure and Low Pressure Steam Circuit Estimated State Point Compositions and Conditions

Syngas to Power Option - MP and LP Steam Circuit Material Balance

STREAM	110	111	112	113	114	115	116	117	118	119	120	121	122	123	124
Description	MIBK Stripper Steam	Steam to Stripper	Steam to MeOH Heater	MP Steam Bypass	Flash Tank Overheads	Steam to MeOH Stripper	Steam to Rectisol Unit	Steam to WWT	Steam to Condensate Heater	Process Steam	Oxidant Heater Condensate	Make-Up	IP Condensate to Deaerator	Make-Up to Humidification	Make-Up to Gas Cooling Loop
Mass Flow lb/hr															
H2O	486	470	101	2,047	12,487	2,190	14,797	3,305	1,611	13,895	3,672	133,126	76,357	96,903	4,510
Total Flow lbmol/hr	27	26	6	114	693	122	821	183	89	771	204	7,390	4,238	5,379	250
Total Flow lb/hr	486	470	101	2,047	12,487	2,190	14,797	3,305	1,611	13,895	3,672	133,126	76,357	96,903	4,510
Total Flow cuft/hr	899	870	187	3,789	72,623	12,606	85,176	19,025	9,273	79,982	72	2,134	1,457	1,639	76
Temperature F	403	403	403	403	308	308	308	308	308	308	466	60	429	241	241
Pressure psi	250	250	250	250	75	75	75	75	75	75	495	50	340	450	400
Vapor Frac	1	1	1	1	1	1	1	1	1	1	0	0	0	0	0
Liquid Frac	0	0	0	0	0	0	0	0	0	0	1	1	1	1	1
Enthalpy Btu/lb	-5,664	-5,664	-5,664	-5,664	-5,685	-5,694	-5,694	-5,694	-5,694	-5,694	-6,418	-6,838	-6,460	-6,656	-6,656
Density lb/cuft	0.5404	0.5404	0.5404	0.5404	0.1719	0.1737	0.1737	0.1737	0.1737	0.1737	50.6935	62.3811	52.4178	59.1385	59.1429
Average MW	18.0153	18.0153	18.0153	18.0153	18.0153	18.0153	18.0153	18.0153	18.0153	18.0153	18.0153	18.0153	18.0153	18.0153	18.0153

5/23/2006

This page is intentionally left blank

Exhibit IX.2-17 Gas Cooling Loop Estimated State Point Compositions and Conditions

Sygas to Power Option - Gas Cooling Loop Material Balance

STREAM	130	131	132	133	134	135	136	137
Description	BFW to Syngas Coolers	BFW to N2 Heater 1	BFW to N2 Heater 2	BFW to Syngas Heater 1	BFW to Syngas Heater 2	BFW to Blowdown	Blowdown	BFW to Loop Pump
Mass Flow lb/hr								
H2O	451,000	141,885	57,503	190,322	61,291	451,000	4,510	451,000
Total Flow lbmol/hr	25,034	7,876	3,192	10,564	3,402	25,034	250	25,034
Total Flow lb/hr	451,000	141,885	57,503	190,322	61,291	451,000	4,510	451,000
Total Flow cuft/hr	7,459	2,459	997	3,299	1,062	7,459	75	7,460
Temperature F	188	290	290	290	290	188	188	189
Pressure psi	400	395	395	395	395	390	390	390
Vapor Frac	0	0	0	0	0	0	0	0
Liquid Frac	1	1	1	1	1	1	1	1
Enthalpy Btu/lb	-6,709	-6,606	-6,606	-6,606	-6,606	-6,709	-6,709	-6,709
Density lb/cuft	60.4675	57.6965	57.6965	57.6965	57.6965	60.4655	60.4655	60.4534
Average MW	18.0153	18.0153	18.0153	18.0153	18.0153	18.0153	18.0153	18.0153

5/23/2006

This page is intentionally left blank

Exhibit IX.2-18 Syngas Humidification and Gas Turbine System Estimated State Point Compositions and Conditions

Syngas to Power Option - Syngas Humidification and Gas Turbine Material Balance (pg. 1 of 2)

STREAM	70		71		72		73		74		75		76		77		78		79	
Description	Nitrogen From ASU		Nitrogen to Humidification Tower		Saturated Nitrogen to Gas Turbine		Syngas to Gas Turbine		Fuel Gas to Saturation Tower		Saturated Syngas to Heater		Hot Syngas to Gas Turbine Combustor		Syngas to HRSG Duct Firing		Air to Gas Turbine Compressor		Gas Turbine Flue Gas	
Flow	lbmol/hr	lb/hr	lbmol/hr	lb/hr	lbmol/hr	lb/hr	lbmol/hr	lb/hr	lbmol/hr	lb/hr	lbmol/hr	lb/hr	lbmol/hr	lb/hr	lbmol/hr	lb/hr	lbmol/hr	lb/hr	lbmol/hr	lb/hr
AR	23.42	935.42	23.42	935.42	23.41	935.16	0.98	39.20	3.20	127.95	3.20	127.92	3.20	127.92	0.07	2.95	505.02	20174.61	531.63	21237.68
BTX	0.00	0.00	0.00	0.00	0.00	0.00	0.11	10.17	0.15	13.83	0.15	13.83	0.15	13.83	0.01	0.77	0.00	0.00	0.00	0.00
CH4	0.00	0.00	0.00	0.00	0.00	0.00	391.82	6285.91	428.17	6869.17	428.12	6868.38	428.12	6868.38	29.50	473.32	0.00	0.00	0.00	0.00
C2H4	0.00	0.00	0.00	0.00	0.00	0.00	1.82	51.19	3.50	98.09	3.50	98.08	3.50	98.08	0.14	3.85	0.00	0.00	0.00	0.00
C2H6	0.00	0.00	0.00	0.00	0.00	0.00	9.21	276.97	17.32	520.75	17.32	520.68	17.32	520.68	0.69	20.86	0.00	0.00	0.00	0.00
C3H6	0.00	0.00	0.00	0.00	0.00	0.00	0.18	7.77	1.41	59.13	1.41	59.13	1.41	59.13	0.01	0.59	0.00	0.00	0.00	0.00
C3H8	0.00	0.00	0.00	0.00	0.00	0.00	3.55	156.43	7.07	311.76	7.07	311.75	7.07	311.75	0.27	11.78	0.00	0.00	0.00	0.00
C4H8	0.00	0.00	0.00	0.00	0.00	0.00	0.01	0.50	0.95	53.41	0.95	53.41	0.95	53.41	0.00	0.04	0.00	0.00	0.00	0.00
C4H10	0.00	0.00	0.00	0.00	0.00	0.00	0.18	10.31	2.50	145.18	2.50	145.18	2.50	145.18	0.01	0.78	0.00	0.00	0.00	0.00
CH3OH	0.00	0.00	0.00	0.00	0.00	0.00	0.00	0.00	0.00	0.00	0.00	0.00	0.00	0.00	0.00	0.00	0.00	0.00	0.00	0.00
CO	0.00	0.00	0.00	0.00	0.00	0.00	3825.36	107148.36	3936.98	110274.67	3936.92	110273.13	3936.92	110273.13	288.04	8068.13	0.00	0.00	0.00	0.00
CO2	0.00	0.00	0.00	0.00	0.00	0.00	8.80	387.30	329.62	14506.20	329.38	14495.84	329.38	14495.84	0.66	29.16	15.86	697.80	4792.18	210899.23
COS	0.00	0.00	0.00	0.00	0.00	0.00	0.00	0.00	0.00	0.25	0.00	0.25	0.00	0.25	0.00	0.00	0.00	0.00	0.00	0.00
HCN	0.00	0.00	0.00	0.00	0.00	0.00	0.00	0.00	0.00	0.00	0.00	0.00	0.00	0.00	0.00	0.00	0.00	0.00	0.00	0.00
HCL	0.00	0.00	0.00	0.00	0.00	0.00	0.00	0.00	0.00	0.00	0.00	0.00	0.00	0.00	0.00	0.00	0.00	0.00	0.00	0.00
H2	0.00	0.00	0.00	0.00	0.00	0.00	2136.95	4308.09	2151.61	4337.64	2151.56	4337.54	2151.56	4337.54	160.91	324.39	0.00	0.00	0.00	0.00
H2O	23.42	421.84	23.42	421.84	2383.21	42933.47	0.00	0.00	0.00	0.00	3020.11	54407.28	3020.11	54407.28	0.00	0.00	581.02	10467.06	9100.54	163946.23
H2S	0.00	0.00	0.00	0.00	0.00	0.00	0.02	0.83	0.07	2.40	0.07	2.37	0.07	2.37	0.00	0.06	0.00	0.00	0.00	0.00
MIBK	0.00	0.00	0.00	0.00	0.00	0.00	0.00	0.00	0.00	0.00	0.00	0.00	0.00	0.00	0.00	0.00	0.00	0.00	0.00	0.00
N2	4589.53	128570.95	4589.53	128570.95	4589.41	128567.70	263.41	7379.28	444.18	12443.18	444.17	12442.96	444.17	12442.96	19.83	555.65	41492.26	1162364.17	46525.84	1303374.88
NH3	0.00	0.00	0.00	0.00	0.00	0.00	0.00	0.00	0.00	0.00	0.00	0.00	0.00	0.00	0.00	0.00	0.00	0.00	0.00	0.00
O2	46.83	1498.53	46.83	1498.53	46.82	1498.05	0.00	0.00	0.00	0.00	0.00	0.00	0.00	0.00	0.00	0.00	11157.22	357008.73	7167.38	229341.83
PHENOL	0.00	0.00	0.00	0.00	0.00	0.00	0.00	0.00	0.00	0.00	0.00	0.00	0.00	0.00	0.00	0.00	0.00	0.00	0.00	0.00
SO2	0.00	0.00	0.00	0.00	0.00	0.00	0.00	0.00	0.00	0.00	0.00	0.00	0.00	0.00	0.00	0.00	0.00	0.00	0.07	4.71
Mass Flow, lb/hr																				
Coal	0		0		0		0		0		0		0		0		0		0	
Flux	0		0		0		0		0		0		0		0		0		0	
Oil	0		0		0		0		0		0		0		0		0		0	
Slag	0		0		0		0		0		0		0		0		0		0	
Sulfur	0		0		0		0		0		0		0		0		0		0	
Tar	0		0		0		0		0		0		0		0		0		0	
Total Flow lbmol/hr	4,683		4,683		7,043		6,642		7,327		10,346		10,346		500		53,751		68,118	
Total Flow lb/hr	131,424		131,424		173,933		126,063		149,765		204,160		204,160		9,492		1,550,700		1,928,790	
Total Flow cuft/hr	1,740,110		90,329		194,008		129,632		157,488		292,175		301,939		9,761		20,342,900		74,465,000	
Temperature F	60		100		326		80		134		314		325		80		59		1099.528	
Pressure psi	15		309		300		297		297		290		285		297		14.696		15.31	
Vapor Frac	1		0.9980166		1		1		1		1		1		1		1		1.0000	
Liquid Frac	0		0.0019834		0		0		0		0		0		0		0		0.0000	
Enthalpy Btu/lb	-22.8674		-16.4405		-1,355		-1,558		-1,701		-2,714		-2,709		-1,558		-45		-633	
Density lb/cuft	0.0755265		1.454959		0.8965		0.9725		0.9510		0.6988		0.6762		0.9725		0.0762		0.0259	
Average MW	28.06301		28.06301		24.6964		18.9786		20.4409		19.7324		19.7324		18.9786		28.8495		28.3156	

This page is intentionally left blank

Exhibit IX.2-18 (cont'd) Syngas Humidification and Gas Turbine System Estimated State Point Compositions and Conditions

Syngas to Power Option - Syngas Humidification and Gas Turbine Material Balance (pg. 2 of 2)

STREAM	80		81		82		83		84		85		86		87		88	
Description	Make-Up to N2 Saturation Loop		N2 Saturation Loop Water to Heater		N2 Saturation Loop Water Out Heater		Make-up to Syngas Sat Loop		Water Out Humidification Tower		Saturation Water to Low Temp Heater		Saturation Water to High Temp Heater		Sat Water to Syngas Humidification		Flue Gas to Stack	
Flow	lbmol/hr	lb/hr	lbmol/hr	lb/hr	lbmol/hr	lb/hr	lbmol/hr	lb/hr	lbmol/hr	lb/hr	lbmol/hr	lb/hr	lbmol/hr	lb/hr	lbmol/hr	lb/hr	lbmol/hr	lb/hr
AR	0.00	0.00	0.01	0.26	0.01	0.26	0.00	0.00	0.00	0.03	0.00	0.03	0.00	0.03	0.00	0.03	533.45	21310.36
BTX	0.00	0.00	0.00	0.00	0.00	0.00	0.00	0.00	0.00	0.00	0.00	0.00	0.00	0.00	0.00	0.00	0.00	0.00
CH4	0.00	0.00	0.00	0.00	0.00	0.00	0.00	0.00	0.05	0.79	0.05	0.79	0.05	0.79	0.05	0.79	0.05	0.79
C2H4	0.00	0.00	0.00	0.00	0.00	0.00	0.00	0.00	0.00	0.02	0.00	0.02	0.00	0.02	0.00	0.02	0.00	0.02
C2H6	0.00	0.00	0.00	0.00	0.00	0.00	0.00	0.00	0.00	0.07	0.00	0.07	0.00	0.07	0.00	0.07	0.00	0.07
C3H6	0.00	0.00	0.00	0.00	0.00	0.00	0.00	0.00	0.00	0.00	0.00	0.00	0.00	0.00	0.00	0.00	0.00	0.00
C3H8	0.00	0.00	0.00	0.00	0.00	0.00	0.00	0.00	0.00	0.01	0.00	0.01	0.00	0.01	0.00	0.01	0.00	0.01
C4H8	0.00	0.00	0.00	0.00	0.00	0.00	0.00	0.00	0.00	0.00	0.00	0.00	0.00	0.00	0.00	0.00	0.00	0.00
C4H10	0.00	0.00	0.00	0.00	0.00	0.00	0.00	0.00	0.00	0.00	0.00	0.00	0.00	0.00	0.00	0.00	0.00	0.00
CH3OH	0.00	0.00	0.00	0.00	0.00	0.00	0.00	0.00	0.00	0.00	0.00	0.00	0.00	0.00	0.00	0.00	0.00	0.00
CO	0.00	0.00	0.00	0.00	0.00	0.00	0.00	0.00	0.05	1.54	0.05	1.54	0.05	1.54	0.05	1.54	0.05	1.54
CO2	0.00	0.00	0.00	0.00	0.00	0.00	0.00	0.00	0.24	10.37	0.24	10.37	0.24	10.37	0.24	10.37	5115.67	225135.61
COS	0.00	0.00	0.00	0.00	0.00	0.00	0.00	0.00	0.00	0.00	0.00	0.00	0.00	0.00	0.00	0.00	0.00	0.00
HCN	0.00	0.00	0.00	0.00	0.00	0.00	0.00	0.00	0.00	0.00	0.00	0.00	0.00	0.00	0.00	0.00	0.00	0.00
HCL	0.00	0.00	0.00	0.00	0.00	0.00	0.00	0.00	0.00	0.00	0.00	0.00	0.00	0.00	0.00	0.00	0.00	0.00
H2	0.00	0.00	0.00	0.00	0.00	0.00	0.00	0.00	0.05	0.10	0.05	0.10	0.05	0.10	0.05	0.10	0.05	0.10
H2O	2359.55	42507.35	11101.45	199992.62	11101.45	199992.62	3019.38	54394.15	10857.00	195588.86	13876.38	249982.99	13876.38	249982.99	13876.38	249982.99	9321.74	167931.15
H2S	0.00	0.00	0.00	0.00	0.00	0.00	0.00	0.00	0.00	0.03	0.00	0.03	0.00	0.03	0.00	0.03	0.00	0.03
MIBK	0.00	0.00	0.00	0.00	0.00	0.00	0.00	0.00	0.00	0.00	0.00	0.00	0.00	0.00	0.00	0.00	0.00	0.00
N2	0.00	0.00	0.12	3.26	0.12	3.26	0.00	0.00	0.01	0.22	0.01	0.22	0.01	0.22	0.01	0.22	46540.31	1303780.24
NH3	0.00	0.00	0.00	0.00	0.00	0.00	0.00	0.00	0.00	0.00	0.00	0.00	0.00	0.00	0.00	0.00	0.00	0.00
O2	0.00	0.00	0.01	0.47	0.01	0.47	0.00	0.00	0.00	0.00	0.00	0.00	0.00	0.00	0.00	0.00	6880.17	220151.65
PHENOL	0.00	0.00	0.00	0.00	0.00	0.00	0.00	0.00	0.00	0.00	0.00	0.00	0.00	0.00	0.00	0.00	0.00	0.00
SO2	0.00	0.00	0.00	0.00	0.00	0.00	0.00	0.00	0.00	0.00	0.00	0.00	0.00	0.00	0.00	0.00	0.00	0.00
Mass Flow, lb/hr																		
Coal	0		0		0		0		0		0		0		0		0	
Flux	0		0		0		0		0		0		0		0		0	
Oil	0		0		0		0		0		0		0		0		0	
Slag	0		0		0		0		0		0		0		0		0	
Sulfur	0		0		0		0		0		0		0		0		0	
Tar	0		0		0		0		0		0		0		0		0	
Total Flow lbmol/hr	2,360		11,102		11,102		3,019		10,857		13,877		13,877		13,877		68,391	
Total Flow lb/hr	42,508		200,000		200,000		54,395		195,605		250,000		250,000		250,000		1,938,300	
Total Flow cuft/hr	761		3,629		4,059		973		3,325		4,474		4,536		5,027		36,156,200	
Temperature F	250		270		410		250		169.4993		250.0136		270		400		264.3058	
Pressure psi	450		410		400		450		425		420		410		400		14.696	
Vapor Frac	0		0		0		0		0		0		0		0		1	
Liquid Frac	1		1		1		1		1		1		1		1		0	
Enthalpy Btu/lb	-6,677		-6,655		-6,491		-6,677		-6,765		-6,677		-6,655		-6,503		-898	
Density lb/cuft	55.8843		55.1183		49.2758		55.8843		58.8363		55.8830		55.1181		49.7276		0.0536	
Average MW	18.0153		18.0154		18.0154		18.0153		18.0158		18.0157		18.0157		18.0157		28.3413	

5/23/2006

This page is intentionally left blank

Exhibit IX.2-19 Steam Turbine and HRSG Estimated State Point Compositions and Conditions

Syngas to Power Option - Steam Turbine and HRSG Material Balance

STREAM	90	91	92	93	94	95	96	97	98	99	100	101	102	103
Description	HP BFW to HRSG	HP Saturated Steam	HP Superheated Steam	Throttle Inlet	Extraction to Oxidation Heater	IP Steam Extraction	IP Steam to Syngas Sat Loop	IP Steam to Syngas Heater	IP Steam to N2 Sat Loop	Steam Turbine Exhaust	Condenser Exhaust	Condensate to HRSG FHW	Economized Condensate to Deaerator	HP Blowdown
H2O Mass Flow, lb/hr	372,035	370,175	370,175	370,175	3,672	76,357	40,011	997	35,349	260,988	260,988	260,988	260,988	1,860
Total Flow lbmol/hr	20,651	20,548	20,548	20,548	204	4,238	2,221	55	1,962	14,487	14,487	14,487	14,487	103
Total Flow lb/hr	372,035	370,175	370,175	370,175	3,672	76,357	40,011	997	35,349	260,988	260,988	260,988	260,988	1,860
Total Flow cuft/hr	6,268	112,705	221,735	229,168	4,820	137,843	72,230	1,800	63,814	75,130,600	4,211	4,208	4,322	566
Temperature F	243	586	955	950	737	652	652	652	652	102	102	102	190	586
Pressure psi	1,690	1,390	1,310	1,265	515	350	350	350	350	1	1	250	200	1,390
Vapor Frac	0	1	1	1	1	1	1	1	1	1	0	0	0	1
Liquid Frac	1	0	0	0	0	0	0	0	0	0	1	1	1	0
Enthalpy Btu/lb	-6,651	-5,691	-5,397	-5,398	-5,489	-5,526	-5,526	-5,526	-5,526	-5,902	-6,796	-6,795	-6,708	-5,691
Density lb/cuft	59.3565	3.2845	1.6694	1.6153	0.7619	0.5539	0.5539	0.5539	0.5539	0.0035	61.9745	62.0179	60.3817	3.2845
Average MW	18.0153	18.0153	18.0153	18.0153	18.0153	18.0153	18.0153	18.0153	18.0153	18.0153	18.0153	18.0153	18.0153	18.0153

This page is intentionally left blank

IX.3PLOT PLAN AND SITE LAYOUT

A conceptual general equipment arrangement and plot plan is shown in Exhibit IX.3-1. The land requirement for the Syngas to Power Reference Plant is estimated to be about 14 acres not including the ASU, about 8 acres of which is allocated for the syngas production plant. About 8 acres is allocated for the syngas production plant, and about 6 acres for the combustion turbine combined cycle system. An additional 2.6 acres is allocated for the ASU plant and supporting systems.

An elevation drawing of a conceptual BGL gasification package installation containing one operating and one spare gasifier is shown in Exhibit IX.3-2. The overall height of the structure housing the equipment, including height required for coal and limestone feed system above each gasifier and that required for slag removal system below the gasifier, is about 115 feet.

Exhibit IX.3-1 Conceptual General Equipment Arrangement and Plot Plan for Syngas to Power Reference Plant

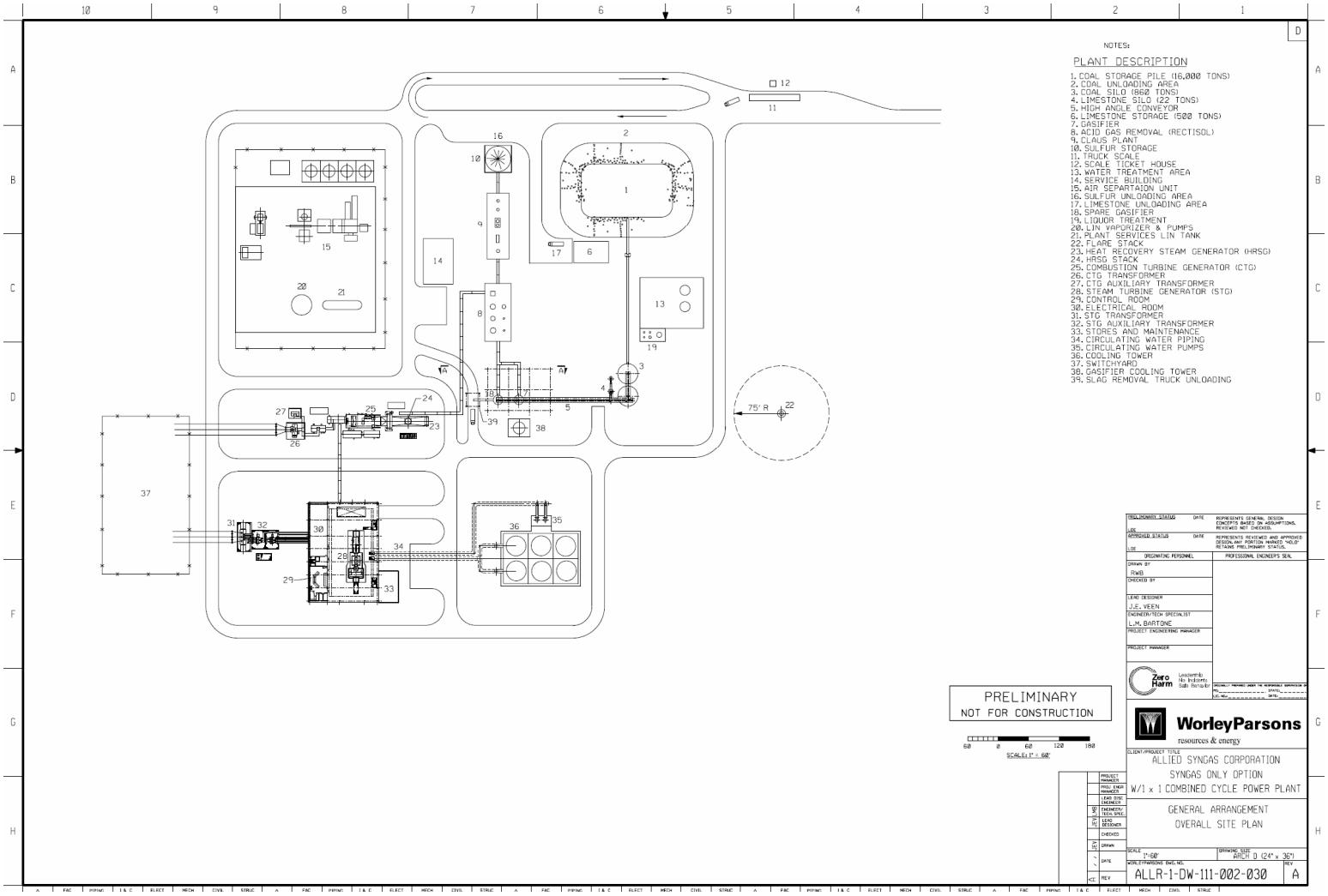

Exhibit IX.3-2 Conceptual Elevation of Gasification Process Installation

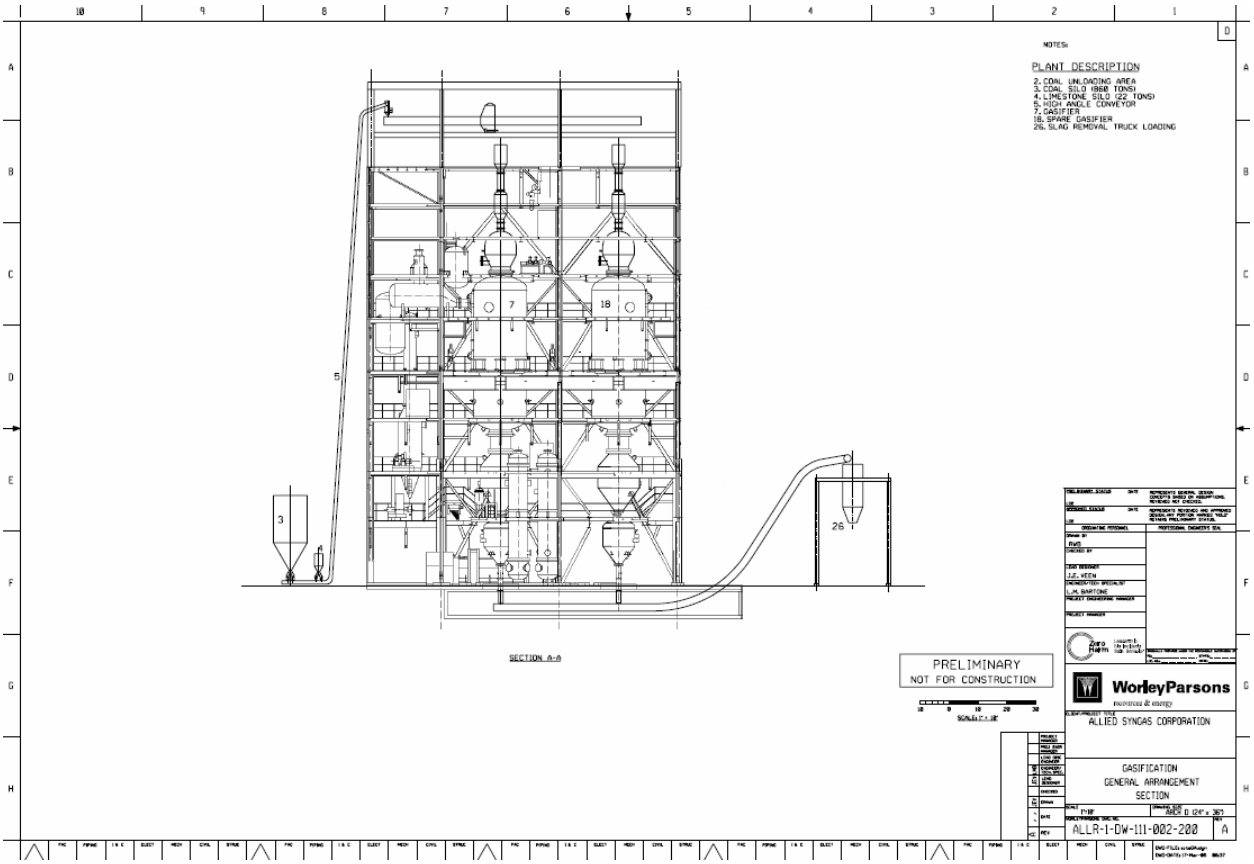

This page is intentionally left blank

IX.4SOLIDS HANDLING SYSTEMS DESCRIPTIONS

IX.4.1 COAL RECEIVING, STORAGE, AND HANDLING

Illinois #6 coal, presized to ¼" x 2", is received, stored, mixed with limestone (flux), transported to the gasifier, and fed into the gasifier lock hopper. A simplified process flow diagram of the system and equipment general arrangements are shown in Exhibit IX.4-1 and Exhibit IX.4-2.

IX.4.1.1 Coal Receiving and Storage

The coal receiving and storage system receives coal, meeting the specifications defined in the Design Requirements Document, from delivery trucks and stores the coal in an outdoor area for reclaim and transport to the gasifier feed system. The system is designed to receive and unload a minimum of 10 coal delivery trucks per hour (70 trucks per day). This allows for receipt of 7 days gasifier consumption at 100% load in 5 days, with unloading occurring over a 7 hour period per day. Trucks will not normally be received at night or on weekends. Coal trucks may range from a 23 ton net tri-axle up to a "Kentucky" type truck rated for 50 ton net weight. The system includes a truck scale for weighing delivery trucks entering and leaving the plant.

The outdoor coal storage area, measuring about 150 ft. by 200 ft., is sized to store about 16,000 tons of coal, sufficient to fuel the gasifier for 14 days at full operating capacity.

IX.4.1.2 Coal Handling and Preparation System

The Coal Handling and Preparation System is designed to perform the following functions:

- Reclaim as-received coal from the coal storage area,
- Screen the coal to remove any material greater than 2" in size,
- Remove magnetic material,

- Store the prepared coal in day bins (18 hour), and
- Meter coal from the day bins to a gasifier feed conveyor.

Coal is reclaimed from the long-term storage pile by a 40 ft. long, 18 degree reclaim feeder and delivered to a vibrating screen at a rate of 250 tons per hour, as shown in Exhibit IX.4-1. The vibrating screen separates oversized (>2") material onto an oversize conveyor that transports the oversized material to an oversized material pile. Coal meeting the top size specification is transported via a high angle conveyor to a reversible belt conveyor that distributes the coal to two, 60° cone type storage silos, each with a capacity of 430 tons. The high angle conveyor consists of two motor driven belts between which the solid material to be transported is sandwiched. An example of a Snake Sandwich High Angle Conveyor manufactured by Dos Santos International for feeding two coal silos is shown in Exhibit IX.4-3. High angle conveyors are used to minimize the land requirement for the syngas production plant. The two silos are steel vessels each 32 feet in diameter with straight shell heights of 45 feet. The total silo capacity is sufficient for 18 hours coal consumption by the gasifier at 100% load. On its way to the silos, the coal is passed through a magnetic material separator where magnetic material is removed and dumped into a container for disposal, and is weighed via a coal scale to measure the quantity of coal being fed to the silos.

Coal is metered from each day silo by a silo discharge feeder onto one of two 100% capacity high angle gasifier feed conveyors, via a two-way diverter gate at the discharge of each silo, at a rate of about 47.7 short tons/hour.

IX.4.2 LIMESTONE RECEIVING, STORAGE, AND HANDLING

Limestone, presized to ¼" x 3/4", is received, stored, mixed with coal, transported to the gasifier, and fed into the gasifier lock hopper. A simplified process flow diagram of the system and equipment general arrangements are also shown in Exhibit IX.4-1 and Exhibit IX.4-2.

IX.4.2.1 Limestone Receiving and Storage

The limestone receiving and storage system receives limestone, meeting the specifications defined in the Design Requirements Document, from delivery trucks and stores the limestone in an outdoor area for reclaim and transport to the gasifier feed system. The system is designed to receive and unload a minimum of two, 23-ton limestone delivery trucks in a 7-hour period each day. This

allows for receipt of 7 days gasifier consumption at 100% load in 5 days. Trucks will not normally be received at night or on weekends. The limestone delivery trucks will be weighed as they enter and leave the facility via the same scales as used for weighing the coal delivery trucks.

The outdoor limestone storage area, measuring about 34 ft. by 55 ft., is sized to store about 500 tons of limestone, sufficient to fuel the gasifier for 14 days at full operating capacity.

IX.4.2.2 Limestone Handling and Preparation System

The Limestone Handling and Preparation System is designed to perform the following functions:

- Reclaim as-received limestone from the coal storage area,
- Store the limestone in a day bin (18 hour), and
- Meter limestone from the day bin to a gasifier feed conveyor.

Limestone is reclaimed from the long-term storage via a front end loader and placed in a reclaim screw feeder hopper, as shown in Exhibit IX.4-1. A screw feeder then transports the limestone at a rate of 10 tons per hour to a high angle conveyor that transports the limestone to a 60° cone type storage silo having a capacity of 22 tons, sufficient for 18 hours consumption by the gasifier at 100% load. An example of a Snake Sandwich High Angle Conveyor manufactured by Dos Santos International for feeding the limestone silo is shown in Exhibit IX.4-4. The silo is a steel vessel, 8 feet in diameter with straight shell height of 12 feet.

Limestone is metered from the day silo by a silo discharge feeder onto one of two 100% capacity high angle gasifier feed conveyors, via a two-way diverter gate at the discharge of the silo, at a rate of about 1.2 tons/hr.

IX.4.3 COAL/LIMESTONE GASIFIER DELIVERY SYSTEM

The coal and limestone gasifier delivery system conveys the coal and limestone mixture to the gasifier feed lock hopper. Coal and limestone from the day bins are transported via one of two 100% high angle gasifier feed conveyors to a 50-ton weigh hopper located above the gasifier feed lock hopper. The weigh hopper's capacity is equivalent to one hour's consumption by the gasifier at 100% load. An example of a Snake Sandwich High Angle Conveyor manufactured by Dos Santos International for feeding coal/limestone

to the weigh hopper is shown in Exhibit IX.4-5. Approximately 7 tons of coal/limestone mixture is metered from the 50-ton weigh hopper into a 7-ton hopper located between the 50 ton weigh hopper and the gasifier. At approximately 10 minute intervals, the coal/limestone mixture in the 7-ton hopper is dumped into the gasifier feed lockhopper.

Exhibit IX.4-1 Simplified Process Flow Diagram of Coal and Limestone Receiving, Storage, and Handling System

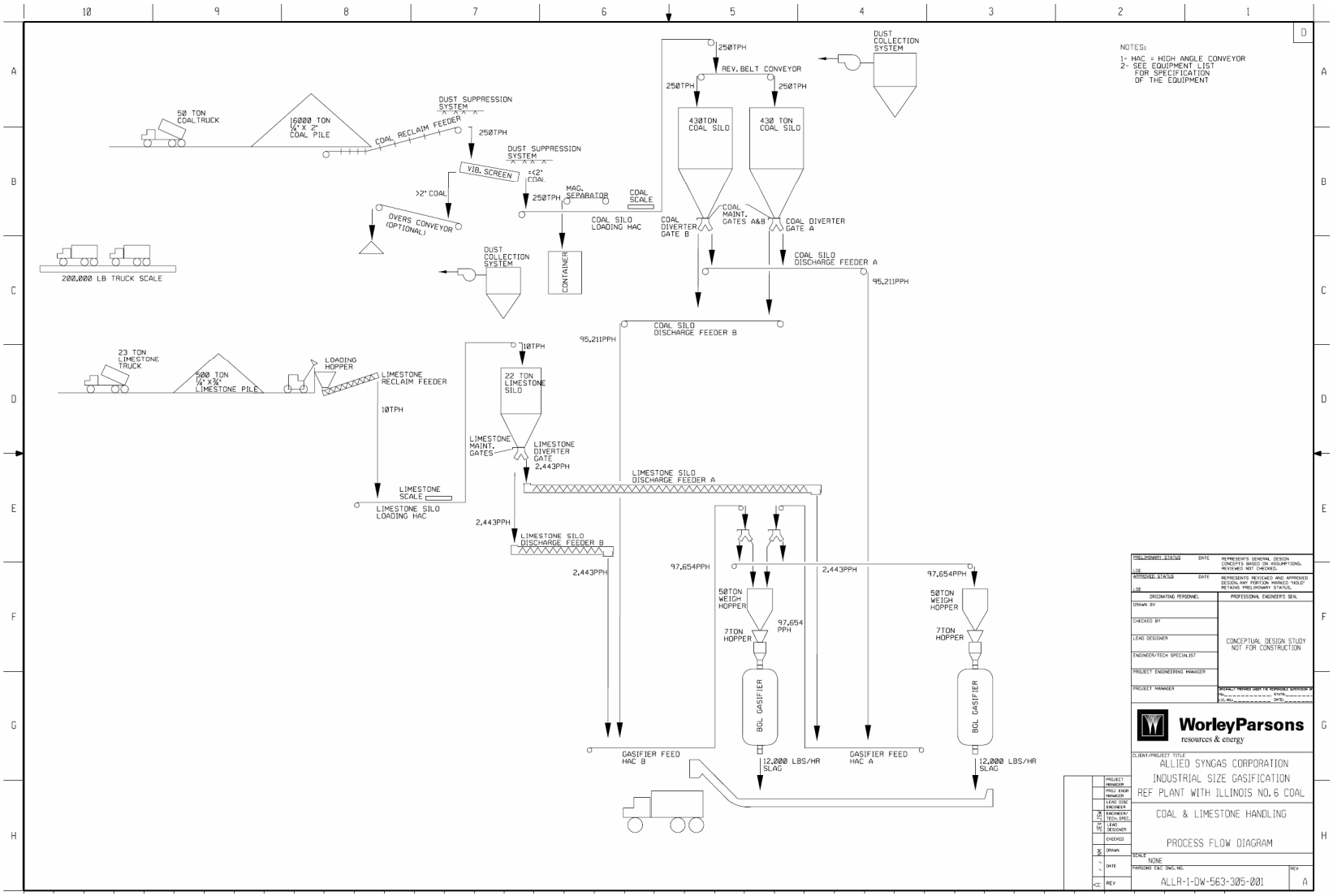

Exhibit IX.4-2 Coal and Limestone Storage and Handling Systems General Arrangement

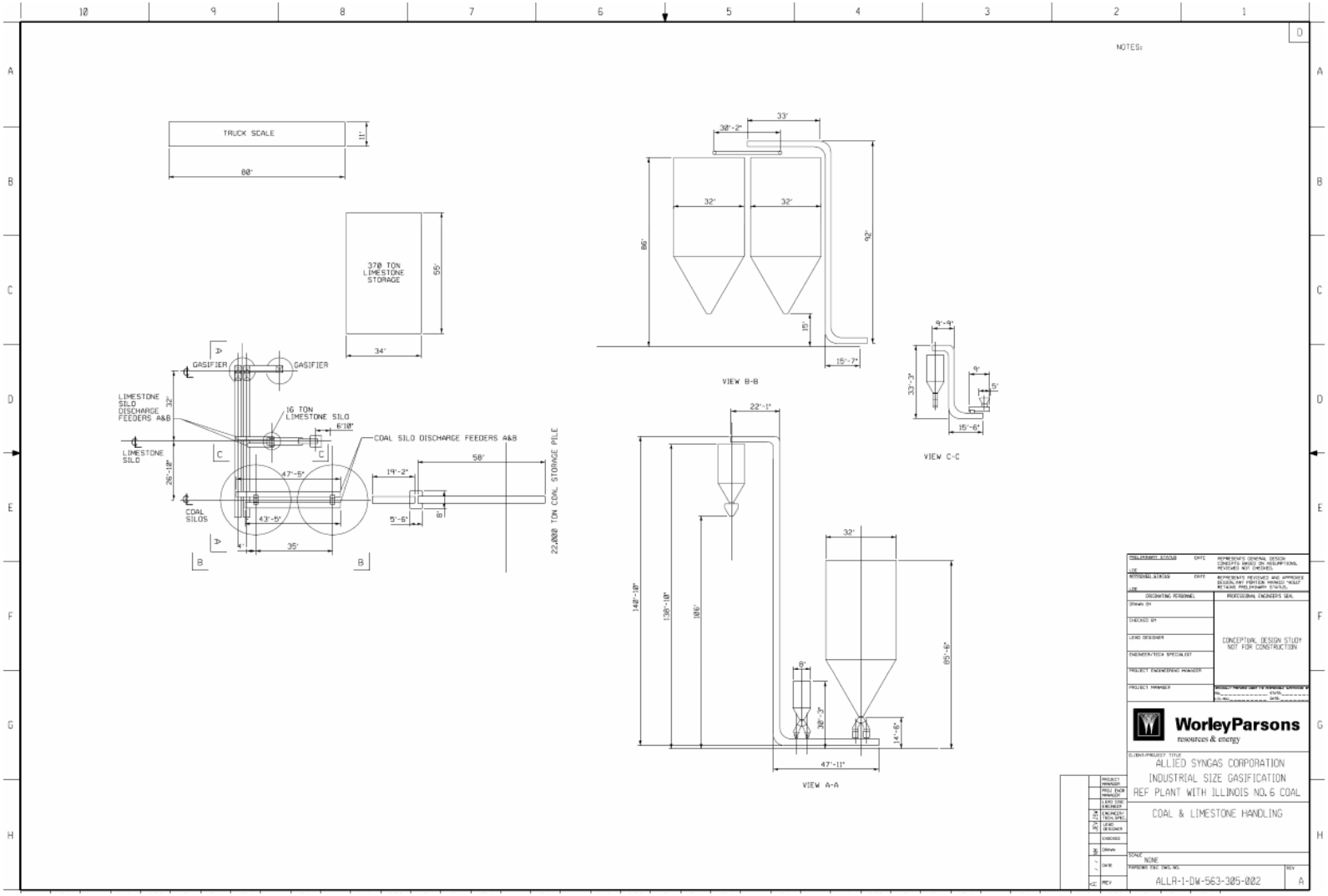

Exhibit IX.4-3 Example of Snake Sandwich High Angle Conveyor by Dos Santos International for Feeding Coal Silos

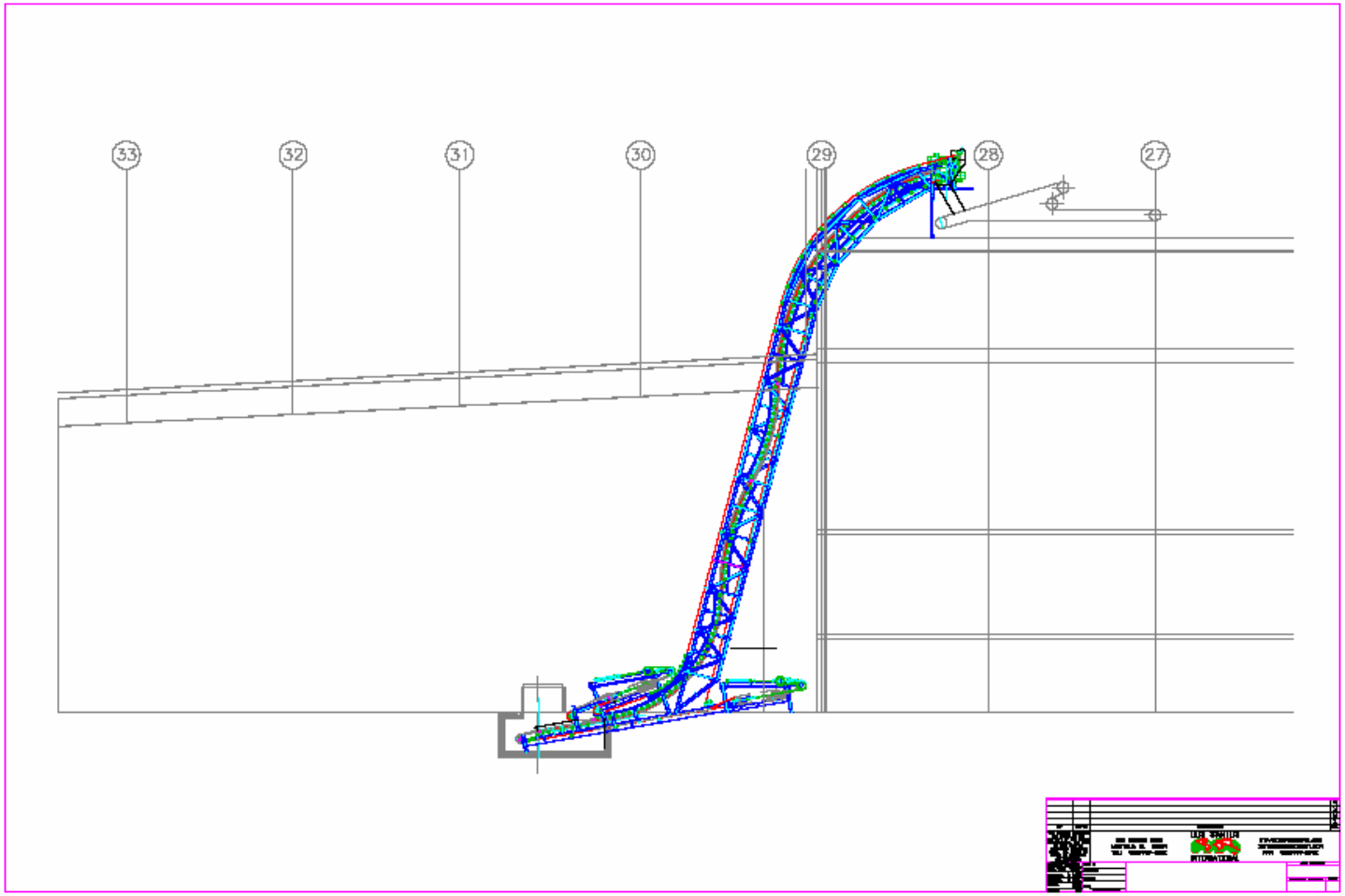

Exhibit IX.4-4 Example of Snake Sandwich High Angle Conveyor by Dos Santos International for Feeding Limestone Silo

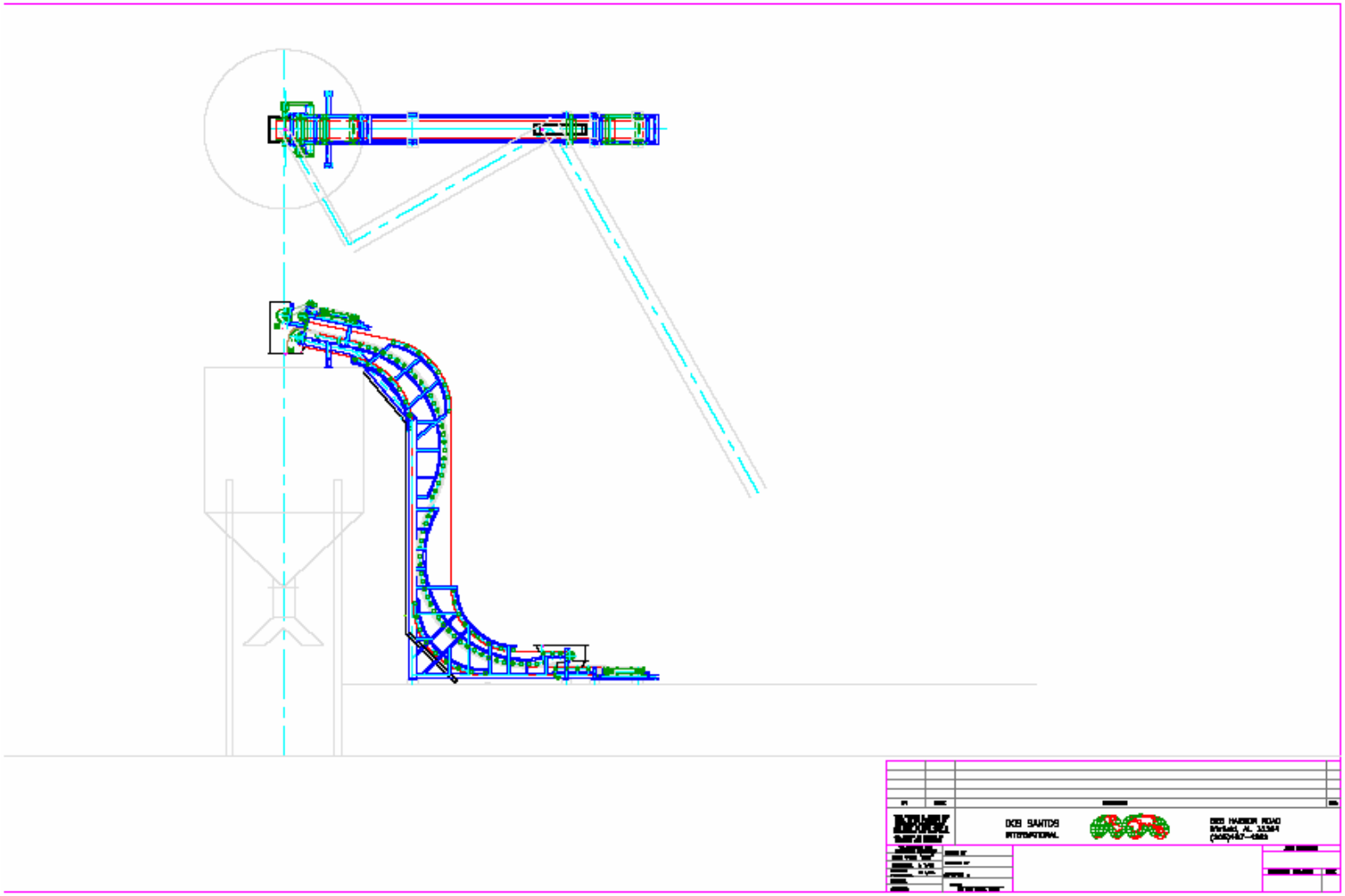

Exhibit IX.4-5 Example of Snake Sandwich High Angle Conveyor by Dos Santos International for Feeding Coal/Limestone to Gasifier Hopper

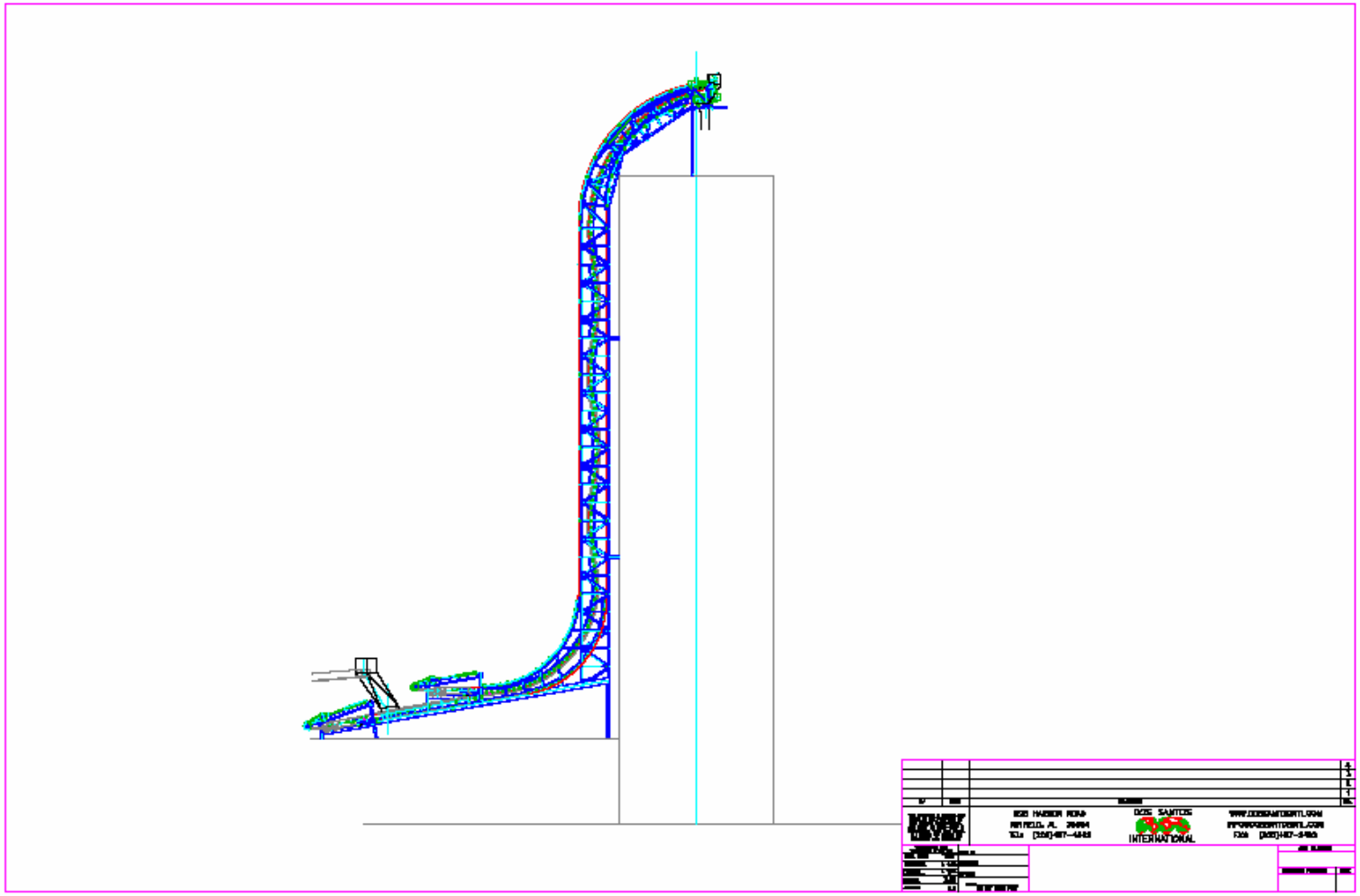

IX.4.4 SLAG HANDLING

The slag handling system collects approximately 7 tons/hour of slag from the gasifier slag lock hopper and transports it to a storage/truck loading area for sale as a byproduct or disposal. The system consists of a water-filled trough with drag-chain conveyor that transports the slag to a truck loading station.

The system will be controlled via a stand alone PLC with DCS interface, and will be provided with instrumentation and components as required for a complete functional, reliable, and safe operating system.

IX.5GASIFIER PROCESS PACKAGE DESCRIPTION

The gasifier process package includes the following:

- Two gasifiers (one operating and one spare) each with coal, limestone, oxygen, steam, and nitrogen feed systems; a slag removal system; and a syngas wash cooler
- Primary syngas heat exchanger (waste heat exchanger)
- Syngas coolers
- Gas/liquor separation and tar/oil reinjection system.

Refer to the conceptual process flow diagram in Exhibit IX.2-3 and the table in Exhibit IX.2-12 for estimated state point composition and conditions for the gasifier process package.

IX.5.1 GASIFIER

The BGL gasifier is a slagging, fixed bed gasification process utilizing counter current gas/solid flow. It is designed to process about 1,145 tons/day of Illinois #6 coal. A concept sketch of the gasifier is shown in Exhibit IX.5-1. Coal is introduced into the top of the gasifier through a feed lock. The gasification agents, steam and oxygen, are injected through the tuyeres in the lower part of the gasifier into a hot fuel bed. Gaseous reaction products ascend countercurrent to the coal. A stirrer is incorporated in the top of the gasifier when the fuel is a caking coal to ensure smooth continuous flow of coal into the gasifier.

The gasifier is designed to achieve a smooth transition of the fuel from the solid to the gaseous phase. Essentially cold solids that enter at the top of the reactor are heated by hot gases rising from the bottom. The counter-current principle results in one of the lowest oxygen consumption rates of commercial gasification processes.

Exhibit IX.5-1 Schematic of Gasifier

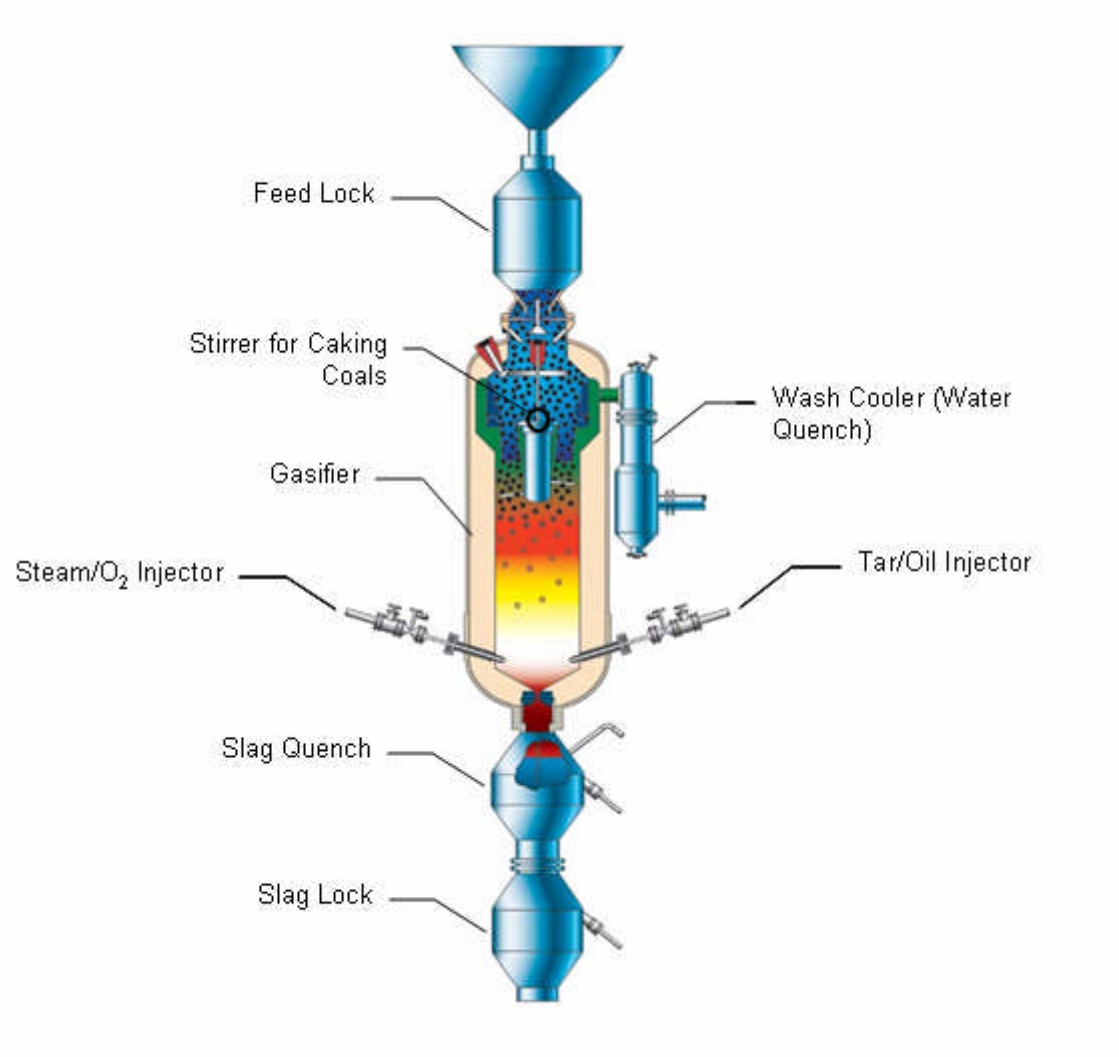

Upon further devolatilization, the coal yields a char or semi-coke that is mainly a carbon skeleton. This process is known as "char conditioning." The formation of well conditioned char within the stirred zone favors good bed behavior.

The gasifier operates at elevated pressure (about 350 psia). The elevated pressure leads to smaller main equipment dimensions and reduces effective gas volume that makes the downstream units smaller in volume and simpler in design.

Liquid slag is discharged by a tap hole arranged centrally at the bottom of the hearth into a water bath in the slag quench vessel. Through rapid cooling, the slag is converted into a solid frit that can simply be disposed of or utilized further.

The gasification media – steam and oxygen – are injected into the gasifier through water-cooled nozzles (tuyeres). Steam and oxygen react immediately with the coke from the gasification zone to form mainly hydrogen and carbon monoxide.

The upward flowing crude gas leaves the fuel bed with a low velocity so that the dust discharge with the gas is minimized.

The crude gas exiting the gasifier enters a wash cooler where the gas is washed intensely with gas liquor, quenched, and saturated with steam. Simultaneously, higher hydrocarbons (tar) condense and dust from the gas is removed. The raw gas is then routed to the first gas cooling stage (waste heat boiler).

IX.5.2 COAL/LIMESTONE FEED SYSTEM

As mentioned previously, the gasification process is under pressure. The coal and limestone (flux) solid mixture is fed to the gasifier reactor via a feed lock operated on a batch basis, loading about 7 tons of coal/limestone mixture during each loading cycle. A limited fuel storage capacity is kept in the top of the gasifier, adding to the safety of the process as it allows the process to continue even if coal lock problems occur. The coal/limestone batch lock hopper cycling contains the following steps:

- Starting with an empty depressurized coal/limestone lock, the bottom cone valve is closed and the top cone valve is opened. Coal and limestone drop by gravity from a weigh hopper, containing only enough coal/limestone mixture to fill the lock, into the lock.
- The top cone valve is then closed and the lock is pressurized with high pressure nitrogen from the ASU plant.
- The bottom cone valve is opened and the fuel gravitates into the gasifier. The system is designed such that for safety reasons the bottom cone valve can be opened only at an even pressure between the gasifier and lock.
- When the lock is empty, the bottom cone valve is closed automatically and the lock is depressurized.
- The top cone valve is opened, the remaining gas is ejected via a dust filter and exhaust gas blower.
- The cycle is then repeated.

IX.5.3 SLAG REMOVAL SYSTEM

The slag removal system consists of a natural gas ring burner, slag quench tank, and slag lock. About 7 tons/hr of slag is intermittently tapped and water quenched automatically, to form a frit that is locked out of the system before being collected and transported for disposal or utilization.

To maintain temperature of the slag pool in the hearth, to prevent tap blockage, and to consume any remaining coke particles, a ring burner is installed underneath the central tap hole of the gasifier. Hot burner gases flow through the slag nozzle into the gasifier and keep the slag in the hearth. After a specific slag height has been reached, as indicated by the differential pressure, the burner is automatically switched to part load operation. The excess pressure of the quench vessel is slightly reduced (below the gasifier pressure) and the liquid slag is discharged through the slag tap into a water-filled slag quench vessel. Upon reaching the minimum slag level, the burner returns to normal operating mode and the tapping is ended. The slag level is controlled automatically via a differential pressure between the quench vessel and slag hearth.

When quenched, the slag forms a glassy granular fritted material of approximately 1/8 inch in diameter. The granular material gravitates further into the water filled slag lock. The sensible heat of the slag is removed via a cooling circuit.

The slag lock works according to the same principle as the coal/limestone lock. It is filled with water and pressurized. The slag is discharged, via a chute, onto a slag conveyor belt and transported to intermediate storage.

IX.5.4 SYNGAS WASH COOLER

Raw gas leaves the top of the gasifier above the fuel bed at a temperature of less than 1,000°F and enters the wash cooler (water quench) directly flanged to the gasifier. The raw gas is directly quenched, cooled, and saturated by circulated gas liquor from the gas liquor separation system. The raw gas temperature is reduced to about 330°F. Simultaneously, dust carried with the gas and tar is removed from the gas.

The multi-phase flow from the wash cooler is then directed to the waste heat exchanger (primary heat exchanger).

IX.5.5 WASTE HEAT EXCHANGER (PRIMARY HEAT EXCHANGER)

The raw gas from the wash cooler enters the primary heat exchanger and is cooled to about 311°F by transferring heat to boiler feed water and generating about 17,939 lb/hr of low pressure steam (75 psia / 309°F). Gas liquor and hydrocarbon condensate are discharged automatically from the sump of the heat exchanger to the gas liquor separation unit.

IX.5.6 SYNGAS COOLING SYSTEM

Approximately 202,580 lb/hr of syngas from the primary heat exchanger is cooled via three tubular heat exchangers from about 311°F to about 95°F before it is transported to the syngas cleanup process. Approximately 2.9 million lb/hr of circulating water is used to cool the syngas. Gas liquor condensate from the coolers is discharged to the liquor separation process for removal of hydrocarbons and then to the liquor treatment system prior to recycling the waste water or discharging it to the environment. Approximately 158,346 lb/hr of cooled syngas leaves the system and is transported to the syngas cleanup system.

IX.5.7 GAS LIQUOR SEPARATION AND TAR/OIL REINJECTION SYSTEM

The gas liquor separation and tar/oil reinjection system removes tars and oils from the gas liquor from the primary heat exchanger (waste heat exchanger) and syngas coolers and recycles the tars/oils back to the gasifier.

The tars, oils, and solids are removed from the gas liquor by gravity separation, achievable by an adequate settling time in the tar and condensate separators, and a sufficient difference in the specific gravity between water and the tar/oil fractions. Tars and oils are collected in a liquids products tank, along with BTX from the Rectisol AGR system and phenol from the waste water treatment system. The liquid products (about 7,960 lb/hr) are recycled from the tank to the gasifier. Phenol containing gas liquor condensate from the separation system is transported to the waste water treatment system. Sour gas from the separation system is sent to the Claus unit for sulfur recovery. Cooling water is supplied to the system from the circulating water system, and about 1,611 lb/hr of steam to heat liquor in the separation system is provided from the low pressure steam header in the steam system.

This page is intentionally left blank

IX.6SYNGAS CLEANUP SYSTEM DESCRIPTION

The syngas cleanup system consists of an acid gas removal (AGR) system, and sulfur production system. The AGR system utilizes a Rectisol process to concentrate and remove sulfur in the form of H_2S and COS and trace contaminants from the syngas prior to the syngas being transported to the end-user. The Rectisol process was selected based on results of a preliminary evaluation of commercially available AGR technologies, as discussed in the Conceptual Design Requirements Document in Section V.

Sour gas from the Rectisol process enters a Claus process for production of elemental sulfur from the H_2S. Refer to the conceptual process flow diagrams in Exhibit IX.2-4 and Exhibit IX.2-5, and the tables in Exhibit IX.2-13 and Exhibit IX.2-14 for estimated state point composition and conditions for the AGR and sulfur production systems.

Data from tests on a BGL gasification process indicate that greater than 90% of the mercury entering the system with the coal reports to the gas liquor stream, and levels below detectable limits report to the syngas. Therefore, it is not anticipated that additional mercury removal from the syngas will be required, and no mercury removal system is included in the reference plant. However, if future testing indicates that additional mercury removal is required to meet environmental criteria, this could be accomplished via an activated carbon bed upstream of the AGR system.

IX.6.1 RECTISOL PROCESS DESCRIPTION

The approximately 158,343 lb/hr of raw gas from the syngas coolers enters an H_2S absorber after being cooled by cleaned syngas leaving the absorber. In the absorber, the raw gas is washed clean of not only H_2S and COS, but also HCN, NH_3, and BTX. The majority of the methanol is recovered in a hot regenerator and methanol stripper. A small amount of fresh methanol is required (about 30 lb/hr)

The raw gas is first prewashed in the bottom section of the absorber and then enters the main section of the absorber via a chimney tray. Laden prewash methanol leaving the bottom of the absorber is routed to a sour flash. The sour gas from the sour flash is directed to the Claus plant. The liquid from the sour flash is sent to a stabilizer tank, where water is introduced, and then to a decanter. BTX from the decanter is transported to the liquids product tank in the gas liquor separation system for recycle back into the gasifier. The remaining liquid from the decanter is heated by low pressure steam prior to being introduced into the methanol stripper. Water from the stripper is directed to the waste water treatment system.

The sulfur-free gas leaving the absorber at the top is reheated in the raw syngas cooler. CO_2, CO, and H2 recovered from the laden methanol in a flash regenerator is compressed and mixed with the portion of the sulfur-free syngas that is used as fuel in the combustion turbine. The combined syngas stream to the combustion turbine has a total sulfur concentration of less than 3 ppmv (<0.3 gr/100 scf).

The laden methanol leaving the main stage of the H_2S absorber is fed to a flash regenerator for recovery of the bulk of the co-absorbed CO_2 as well as the CO and H_2 which are also co-absorbed in very small amounts. Tail gas from the Claus unit is also compressed and fed to the flash regenerator. The major portion of the gas that leaves the flash regenerator at a pressure of about 20 psia is compressed and added to the syngas from the H_2S absorber. A small amount of flashed gas is directed to the hydrogenation reactor in the Claus unit.

Methanol from the flash regenerator enters the hot regenerator for final regeneration by stripping with methanol vapor generated in a reboiler by means of low pressure steam. The acid gas leaving the top of the regenerator is cooled to recover methanol, which is recycled to the regenerator. The acid gas is transported to the Claus unit for recovery of the sulfur in the gas. Hot regenerated methanol is pumped back to the H_2S absorber via a refrigeration cooler.

Water from the methanol stripper is directed to the waste water treatment system.

Approximately 149,760 lb/hr (2.79 million scfh) of clean syngas combined with CO-rich tailgas, with a heat content of about 875 MMBtu/hr on an LHV basis and 934 MMBtu/hr on an HHV basis, exits the cleanup system and is transported to the combustion turbine. An additional 9,492 lb/hr of syngas produced, with a heat

content of 67 MMBtu/hr on an HHV basis, is used as supplemental fuel in a duct burner in the combined cycle HRSG.

About 7,192 lb/hr of acid gas and 869 lb/hr of sour gas from the Rectisol process is transported to the Claus sulfur recovery unit.

Approximately 136,100 lbs/hr of cooling water required for the approximate 2.45 MMBtu/hr cooling duty is supplied by the circulating water system. About 14,800 lb/hr of low pressure (75 psia) steam required for the process is supplied from the low pressure steam header in the steam system. Refrigerant for cooling the flow streams is supplied by a refrigeration system requiring about 1,570 kW of electrical power. Pumping and compressor power requirements for the Rectisol process total about 2,000 kWe.

IX.6.2 CLAUS PROCESS DESCRIPTION

The Claus process recovers about 99% of sulfur from the acid gas and sour gas from the Rectisol, liquor separation, and waste water treatment processes in the form of elemental sulfur. The Claus process consists of a Claus furnace and two catalytic stages. The oxidant to the Claus furnace is air enriched to about 30% oxygen by weight. The feed streams are first preheated using steam and then enter the Claus furnace where about 75% of the H_2S is reacted to SO_2. The exhaust is passed through a waste heat boiler to generate steam for the process, and the SO_2 and remaining H_2S in the exhaust is then reacted to sulfur and water in the catalytic stages. Tail gas from the process is hydrogenated and quenched in a water wash tower and then recycled to the flash regenerator in the Rectisol process. Blowdown from the process is sent to the waste water treatment system. Export steam is transported to the low pressure and high pressure steam headers, and condensate to the flash tank in the steam system. Sulfur product is condensed and collected in a sulfur pit for transport to a sulfur product storage area.

About 13,200 lb/hr of intermediate pressure (840 psia, 240°F) boiler feed water for steam generation in the Claus process is provided from the deaerator in the steam system. About 120 lb/hr of oxygen is supplied from the ASU. Approximately 222,200 lb/hr of cooling water to provide about 4 MMBtu/hr of cooling duty in the Claus process is supplied by the circulating water system.

About 3,000 lb/hr of elemental sulfur byproduct is produced in the Claus system.

This page is intentionally left blank

IX.7WASTE WATER TREATMENT SYSTEM DESCRIPTION

The waste water treatment system treats the waste water and gas liquor condensate from the processes prior to reusing the water for slag cooling or in other processes. Refer to the conceptual process flow diagram in Exhibit IX.2-6 and the table in Exhibit IX.2-15 for estimated state point compositions and conditions for the waste water treatment system.

Waste water comes from the Rectisol unit (methanol stripper bottoms), Claus Unit (blowdown), and waste heat exchanger steam drum blowdown. Gas liquor condensate comes from the gas liquor separation system.

Gas liquor is first introduced into an extraction column. Phenol containing condensate is sent to an MIBK stripper. Phenol from the stripper is recycled to the gasifier via the liquid products tank in the liquor separation system. Tail gas from the stripper is sent to a tail gas burner after it is cooled by cooling water to condense solvents that are recycled to the extraction column.

Dephenolated liquid from the extraction column is sent to a sour gas stripper. Sour gas from the stripper is sent to the Claus unit. Liquid from the stripper is sent to a surge tank, along with water from the Rectisol and Claus units, where calcium oxide (CaO) is added and then sent to a mixing tank where iron chloride ($FeCl_3$) is added to induce precipitation of solids. Solids (sludge) are then separated from the liquid, and the liquid is transported to a biological reactor for final cleanup. The gas from the biological reactor is vented, and the water is discharged in accordance with local regulations or reused in plant processes if it meets process specifications.

About 3,305 lb/hr of low pressure steam (75 psia) and 490 lb/hr of intermediate pressure steam are provided by the steam system for liquor heating and the MIBK stripper in the waste water treatment process. About 25,000 lb/hr of cooling water is supplied by the circulating water system for gas cooling in the process.

This page is intentionally left blank

IX.8PROCESS STEAM SYSTEM DESCRIPTION

The process steam system collects and distributes steam from and to various processes in the syngas production plant. Refer to the conceptual process flow diagram in Exhibit IX.2-7 and the table in Exhibit IX.2-16 for estimated state point compositions and conditions for the steam subsystem.

The system collects low pressure steam from the Claus unit (about 4,677 lb/hr) and waste heat exchanger in the gasification process (about 17,939 lb/hr) in a low pressure steam header for distribution to the Rectisol, waste water treatment, and gas liquor separation systems. The system collects intermediate pressure steam from the Claus unit (1,527 lb/hr) in an intermediate steam header that distributes intermediate pressure steam to the MIBK stripper and steam stripper in the waste water treatment system, and the methanol heater in the Rectisol system. The subsystem also collects the condensate from these processes and the oxygen preheater, adds makeup water, deaerates it, and distributes it to the waste heat exchanger, and Claus unit.

This page is intentionally left blank

IX.9COMBUSTION TURBINE COMBINED CYCLE SYSTEM

IX.9.1 COMBUSTION TURBINE/GENERATOR

Desulfurized syngas at 126,063 lb/hr and compressed Rectisol tail gas at 23,702 lb/hr are heated and saturated in the Syngas Humidification Tower. The combined gas has an energy content of 875 MMBtu (LHV) and is routed to the gas turbine combustor.

Nitrogen diluent from the ASU is heated and saturated in a separate humidification tower. Like the Syngas Humidification Tower, the Nitrogen Humidification Tower is a tray-column where gas is counter-currently contacted with hot water. The saturated syngas and saturated nitrogen have a energy content of 125 Btu/scf when combined and combusted in the gas turbine combustor.

A GE 6FA gas turbine was chosen for this study. Several gas turbines were proposed. These included the GE 7EA, ALSTOM GT11N2, Pratt and Whitney FT8-3 TwinPac, Rolls-Royce Trent 60, and the Siemens W251B11. The GE 6FA was chosen over the other units because of a proven track record of syngas firing and because the GE 6FA was the best match to the energy content of the BGL1000 gasifier-based syngas production plant.

The GE 6FA air compressor generates high pressure air that is utilized in both the gas turbine combustor as well as to cool the hot surfaces internal to the machine. Saturated syngas and saturated nitrogen are mixed and combusted prior to expansion in the turbine. The nitrogen-syngas mixture heat content of 125 Btu/scf is used to limit NOx formation in the turbine exhaust. The GE 6FA produces 92 MW when firing syngas and has a turbine exhaust temperature of approximately 1,100^{o}F.[e] The turbine exhaust is then routed to the duct burner of the HRSG.

[e] Performance estimate based on information that WorleyParsons has on GE 6FA performance when firing syngas and has not been verified by General Electric for the specific reference plant syngas

IX.9.2 HRSG

The Heat Recovery Steam Generator is used to recover waste heat rejected by the gas turbine. Energy from the waste heat is recovered through high-pressure steam generation. The steam generated in cooling the flue gas is utilized in a steam turbine generator to produce additional electrical energy.

Hot flue gas from the gas turbine exhaust is routed to the duct burner section of the HRSG. In the duct burner, syngas is fired creating additional thermal energy. Syngas is fired in the duct burner in order to enhance the amount of energy available to the steam generator as well as the fact that it was unusable in the gas turbine as the gas turbine was fully loaded. An alternative approach would be the admission of less coal to the gasifier thereby limiting syngas production to just that which was needed in the gas turbine combustor.

The HRSG generates high-pressure steam (1,250 psig/950°F) for expansion in a steam turbine and low-pressure steam (25 psia) used for deaeration. The HRSG also provides some energy for heating condensate. The cooled flue gas exits the HRSG at 264°F and is then directed to the plant stack.

IX.9.3 STEAM TURBINE/GENERATOR

The steam turbine used in this study configuration is a non-reheat unit with extraction steam capability. The exhaust empties into a condenser. The throttle conditions are 1,250 psig and 950°F. The condenser pressure is 1 psia (2” Hg). Extractions from the turbine provide steam for the gasifier and a portion of the steam used in the other parts of the process island.

IX.10 FLARE SYSTEM DESCRIPTION

An elevated flare system provides for safe combustion of syngas during gasifier start-up and system upsets. On gasifier start-up, all syngas gas from the gasifier is sent to a gasifier start-up flare until the gasification process has been stabilized on coal. A knock-out vessel removes excess liquids and solids from the gas prior to the gas being introduced into the flare to prevent plugging of the flare system and to minimize emissions during the start-up period. After the gasifier operation is stabilized, the syngas is transported to the gas cleanup system.

The syngas from the gas cleanup system is sent to a separate main flare until the syngas meets the combustion turbine specifications, and the combustion turbine combined cycle system operation is stabilized and ready to be transferred to syngas operation. The syngas will also be sent to the main flare system when the performance of any system treating the syngas or gas liquor becomes insufficient to continue safe operation of the system or meet syngas product quality specifications, or in the event of combustion turbine combined cycle trips, until the syngas production system can be shutdown. From an economic standpoint, it is necessary to keep flaring as short as possible. From the emissions point of view, the most important aspect of the stabilization process is to ensure that desulfurization of the syngas and recovery of sulfur take place as quickly as possible.

The flare is designed to handle the total quantity of syngas produced from the gasifier at 100% load. The height of the flare will be based on a radiant heat level not to exceed 500 Btu/hr/ft^2 at the base of the flare. For purposes of developing the conceptual layout, a flare height of 150 feet and a clear space radius of 75 ft. around the base of the flare were assumed to satisfy the requirements.

This page is intentionally left blank

IX.11 CIRCULATING WATER SYSTEM DESCRIPTION

The circulating water system provides cooling water to the gasification process, syngas coolers, Rectisol system, Claus system, liquor separation system, waste water treatment system, and combustion turbine combined cycle system. The system consists of a plume-abated, wet-dry mechanical draft cooling tower, pumps, and piping required to remove heat from the cooling water, add makeup water, and distribute the water to the processes. The estimated circulating water requirements for the processes are shown in Exhibit IX.11-1.

Exhibit IX.11-1 Estimated Circulated Cooling Water Requirements

PROCESS	FLOW RATE	SUPPLY TEMPERATURE	RETURN TEMPERATURE
Gasification (incl. syngas coolers)	3,335,643 lb/hr	69°F	87°F
Rectisol	136,111 lb/hr	69°F	87°F
Claus	222,222 lb/hr	69°F	87°F
Waste Water Treatment	25,000 lb/hr	69°F	87°F
Combustion Turbine Combined Cycle	12,953,413	69°F	87°F
Total	16,672,389 lb/hr		

This page is intentionally left blank

IX.12 PROCESS WATER SUPPLY SYSTEM

The process water supply system provides demineralized makeup water to the AGR (Rectisol), steam, and circulating water systems. The system also provides water for slag cooling. The estimated process makeup water requirements are shown in Exhibit IX.12-1.

Exhibit IX.12-1 Estimated Process Makeup Water Requirements

PROCESS	FLOW RATE
AGR (Rectisol) System	270 lb/hr
Steam System	133,126 lb/hr
Circulating Water System	248,404 lb/hr
Slag Cooling	31,376 lb/hr
Total	413,176 lb/hr

This page is intentionally left blank

IX.13 INSTRUMENTATION AND CONTROL SYSTEM DESCRIPTION

The instrumentation and control system consists of the equipment required to control the syngas to power plant related processes in a safe and efficient manner. The plant systems will each be controlled by separate digital control systems (DCS) integrated with an overall plant DCS.

This page is intentionally left blank

IX.14 ELECTRICAL SYSTEM DESCRIPTION

The electrical system consists of the equipment necessary to distribute electrical power to the end-user processes and receive and distribute power to the electrically driven components in the syngas to power plant and building support systems. It includes station service equipment, switchgear and motor control centers, conduit and cable trays, wire and cables, protective equipment (grounding, cathodic protection, etc.), and standby equipment. The anticipated total electrical power required for the syngas to power plant is 16,146 kWe. A breakdown of electrical power requirements for major systems is shown in Exhibit IX.14-1.

Exhibit IX.14-1 Estimated Electric Power Requirements Summary

SYSTEM	KWE
Gasification	600
Material Handling	208
Nitrogen Compressor	7,320
Tail Gas Compressor	840
BFW Pumps	930
Circulating Water	900
Condensate Pump	80
Rectisol	3,568
Claus	180
Wastewater Treatment	300
Steam System	200
Combustion Turbine Combined Cycle	1,020
Total	16,146

This page is intentionally left blank

IX.15 AIR SEPARATION UNIT DESCRIPTION

In this syngas production plant option, about 580 tons/day of 99.5% oxygen for the gasifier and Claus furnace, and 1,630 tons/day of nitrogen for feed lock purge and use as a diluent in the combustion turbine for NOx control at about 517 psia will be purchased across-the-fence from a gas supplier. The type of ASU will be selected by the gas supplier based on the oxygen and nitrogen requirements, and availability requirement, of the syngas production plant. Utilities for the ASU will be the responsibility of the gas supplier. It is anticipated that these utilities will include about 9,700 kWe of electric power and about 3,200 gpm of circulating water for cooling.

This page is intentionally left blank

IX.16 CAPITAL AND O&M COST ESTIMATES

This section describes the approach and results of evaluating the expected cost of the Syngas to Power Reference Plant.

IX.16.1 COST ESTIMATING APPROACH

The approach to capital cost development is a combination of WorleyParsons estimates of selected specific major systems to supplement the costs from an in-house BGL gasifier cost model that develops capital costs for an entire IGCC power plant. The format includes separate evaluation of major systems and sub-systems for the entire plant. These costs are determined with several levels of complexity depending on the specific system being estimated. The capital cost at the level of Total Field Cost includes equipment, materials, and installation labor.

The resulting capital cost is provided on an estimate form that recognizes each cost account for the plant. Each account in the Reference Plant estimate contains separate costs for equipment, materials, and installation labor. These costs comprise the Total Field Cost (TFC), also referred to as the Bare Erected Cost (BEC). The Total Capital Cost consists of equipment and material costs, direct and indirect labor costs, engineering costs, other costs and contingencies for the total syngas to power project. The estimate does not include escalation, financing costs or any additional costs that would be the responsibility of the plant owner. The model helps assure that plant estimates are consistently evaluated and that all relevant process scope is included. When more than one case is evaluated, this approach produces costs that indicate normalized and unbiased results that reflect generic differences.

The cost of plant operating and maintenance is included for the Reference Plant. These costs were developed on an average annual cost basis. This operating and maintenance cost estimate includes the following:

- Fuel cost

- Fixed Operating Cost
    - Operating labor
    - Maintenance labor and Material
    - Administrative and support labor
- Variable, non-fuel operating costs
    - Consumables
    - Waste disposal
- Other operating costs (By-Products)

IX.16.2 COST BASIS AND ASSUMPTIONS

IX.16.2.1 Capital Cost Basis and Assumptions

The following are the basis for the capital costs:

- Construction performed by Gulf Coast non-union labor.
- Coal will be delivered to the site by truck.
- A separate unloading facility is included for the limestone (flux) supply.
- Slag waste will be trucked to an unspecified off-site disposal area.
- Cost estimate scope is based on study performance summary, heat and material balance data, conceptual site arrangement, and system design descriptions presented in previous sections.
- Cost estimate is in constant June 2005 dollars.
- Estimate for coal and limestone handling systems is based on an in-house conceptual estimate of plant specific material handling scope. The cost does include vendor furnished budgetary costs for over 80% of the equipment cost.
- The estimates for the gas cleanup system, waste water treatment system, and the combustion turbine combined cycle system were prepared by WorleyParsons. These systems include the Rectisol system, Claus system, Gas Liquor Treatment system, combustion turbine/generator, HRSG, and steam turbine systems. These estimates were developed on the basis of engineering defined equipment lists that defined each of the major components for each system. The costs were based on a US Gulf Coast basis.

- The estimate for the gasifier system is based on the in-house BGL IGCC cost model utilized for previous IGCC evaluations, and includes the cost of a spare gasifier with feed lock, gas water wash vessel, slag quench vessel, and slag lock.
- Model costs are adjusted to the common June 2005 basis using Chemical Engineering Indices. Indices generally reflect the recent actual increases in steel price. However, the steel commodity prices are very volatile and significant changes occur on a monthly basis. Depending on the perceived long-term impact of these changes, special consideration of the impact is necessary.
- Construction of the project is based on the owner purchasing equipment, retaining the services of an engineering/design/construction manager firm and executing construction with multiple contracts.
- Construction cost is based on a 40 hour workweek with spot overtime.
- Equipment costs are based on use of United States equipment vendors.
- Contingency was evaluated with varying rates for each estimate line item depending on the risk for cost growth. The resulting contingency rate for each estimate is the weighted composite value.
- Estimate includes the following:
    - Syngas to power plant battery limits
    - All identified process equipment necessary for the production of syngas
    - Wet/Dry cooling tower and circulating water system
    - Auxiliary transformer, switchgear and MCC's to support the plant auxiliary power load
    - DCS system for plant control
    - Miscellaneous systems and equipment necessary to support the major process systems
    - Site development and buildings
    - Professional services for the engineering & design of the syngas to power balance of plant.
    - Professional services for construction management of the syngas to power plant.

- Professional services and craft labor in support of plant startup but not the costs of owner's plant startup.
- An allowance for startup spare parts but not the cost of initial spare part inventory.
- An allowance for Builders Risk and General Liability Insurance

♦ Estimates do not include the following:

- Capital cost for the air separation unit (the facility is considered to be off-site and the cost of oxygen and nitrogen are recognized in the annual O&M cost estimate and include the impact of utility costs).
- Sales tax
- Escalation
- Owners costs such as for licenses, permits, land, etc.

IX.16.2.2 Operating and Maintenance Cost Basis and Assumptions

Annual Operating and Maintenance (O&M) costs are based on and include the following:

♦ O&M estimate is the average annual cost.

♦ Evaluation Annual Plant Capacity factor is 92%.

♦ Cost of fuel is included.

♦ Average operator labor rate is $32.00

♦ Operator labor burden is 30% of base labor, and Overhead charge is 25% of all plant labor.

♦ Average annual maintenance material and labor

♦ Consumables costs are based on the expected full load consumption (resulting costs are adjusted for the stated plant capacity factor) and corresponding unit costs for the following:

- Water Makeup
- Water Treatment Chemicals
- Flux (limestone)
- Oxygen
- Methanol

- Natural Gas
- Nitrogen
- Waste Disposal
- Sulfur By-Product Credit

IX.16.2.3 Results

IX.16.2.3.1 Total Indicative Price

A summary of the capital cost estimate is shown in Exhibit IX.16-1. The total capital cost of the syngas to power reference plant is estimated to be $202.6 million, about $1,730/kWe net product power. The estimated capital cost does not include financing, escalation, or owner's costs, as noted in the capital cost basis and assumptions in IX.16.2.1.

IX.16.2.3.2 Annual Operating and Maintenance Costs

The estimated annual operating costs, excluding annualized capital costs, are summarized in Exhibit IX.16-2. The annual fixed operating costs are estimated to total about $8.1 million, or about $69/kWe net product power. The annual variable non-fuel operating costs are estimated to total about $11.9 million, about $.013/kWh of product energy based on a plant capacity factor of 92%. The annual fuel operating cost is estimated to be $12.7 million, or about $0.013/kWh net product energy. The total annual variable operating cost, including fuel cost, is thus estimated to be about $0.026/kWh net product energy.

Exhibit IX.16-1 Summary of Capital Cost Estimate

INDICATIVE PRICING

CLIENT: DOE
PROJECT: Industrial Size Gasification
CASE: BGL 1000 Syngas w/ Power, Tar Recycle & Spare-III#6

7/7/2006 Cost Base (Jun.) 2005

Prepared by: G. Hinds Checked by:L. L. Pinkerton

CODE	ITEM		EQUIPMENT	MATERIAL	LABOR	TOTAL	COMMENTS
							117,000 kW-net
1.0	Coal & Sorbent Handling		$ 913,985	$ 111,057	$ 404,090	$ 1,429,132	Coal & Flux Receiving & Reclaim
2.0	Coal & Sorbent Prep & Feed		$ 1,628,788	$ 128,284	$ 600,765	$ 2,357,837	Coal & Flux Storage & Feed to Gasifier
3.0	Misc. BOP Systems		$ 731,374	$ 444,117	$ 444,398	$ 1,619,890	
4.0	Gasifier & Accessories		$ 18,132,336	$ 642,216	$ 11,367,299	$ 30,141,850	Gasifier, Gas Cooling, Slag Quench, Tar Separation
4.0	ASU Plant		$ -	$ -	$ -	$ -	Off-Site (see O&M)
5.0	Gas Cleanup		$ 19,384,063	$ 4,918,095	$ 9,712,246	$ 34,014,404	Rectisol, Claus, Gas Liquor Treating & Methanation
5.0	CO2 Removal & Compression		$ -	$ -	$ -	$ -	
6.0	Combustion Turbine Plant		$ 44,609,000	$ 7,509,529	$ 13,428,471	$ 65,547,000	
7.0	HRSG, Ducting & Stack		$ -	$ -	$ -	$ -	Included In Combustion Turbine Plant
8.0	Steam Turbine Generator		$ -	$ 186,871	$ 113,187	$ 300,058	Steam Piping System
9.0	Cooling Water System		$ 928,242	$ 575,636	$ 479,993	$ 1,983,871	Cooling Tower Cooling & Component Cooling
10.0	Ash Handling System		$ 804,136	$ 294,871	$ 312,194	$ 1,411,202	Slag Conveyor & Truck Feed
11.0	Accessory Electric Plant		$ 2,189,662	$ 1,053,437	$ 2,019,357	$ 5,262,456	
12.0	Instrumentation & Control		$ 2,445,502	$ 276,391	$ 951,747	$ 3,673,640	
13.0	Improvements to Site		$ 217,145	$ 255,977	$ 568,091	$ 1,041,213	
14.0	Buildings & Structures		$ -	$ 983,697	$ 628,015	$ 1,611,712	
	TOTAL FIELD COST		$ 91,984,232	$ 17,380,177	$ 41,029,854	$ 150,394,263	
	PROFESSIONAL SERVICES:		$ 15,039,400	$ -	$ -	$ 15,039,400	Includes Engineering, Design & CM
	OTHER COSTS (LESS Escalation)		$ 8,300,000	$ -	$ 600,000	$ 8,900,000	Freight, Heavy Haul, Startup Spares & Insurances
	ESCALATION		$ -	$ -	$ -	$ -	Excluded
							$/kW-net
	TOTAL (w/o CONTINGENCY)		$ 115,323,632	$ 17,380,177	$ 41,629,854	$ 174,333,663	1,490
	CONTINGENCY					$ 28,253,037	
							$/kW-net
	TOTAL					$ 202,586,700	1,730

Exhibit IX.16-2 Estimated Annual O&M Costs

INITIAL & ANNUAL O&M EXPENSES					Cost Base (Jun.)	2005
BGL 1000 Syngas w/ Power, Tar Recycle & Spare-III#6					Heat Rate-net(Btu/kWh):	
Plant Output:	Syngas (MMBtu/hr)	Hydrogen (MMBtu/hr)	0		MWe-net:	117.3
					Capacity Factor: (%):	92
OPERATING & MAINTENANCE LABOR						
Operating Labor						
Operating Labor Rate(base):	32.00	$/hour				
Operating Labor Burden:	30.00	% of base				
Labor O-H Charge Rate:	25.00	% of labor				
Operating Labor Requirements(O.J.)per Shift:	1 unit/mod.		Total Plant			
Skilled Operator	2.0		2.0			
Operator	9.0		9.0			
Foreman	1.0		1.0			
Lab Tech's, etc.	1.0		1.0			
TOTAL-O.J.'s	13.0		13.0			
					Annual Cost $	Annual Unit Cost $/kW-net
Annual Operating Labor Cost					$4,737,408	40.402
Maintenance Labor Cost					$1,730,378	14.757
Administrative & Support Labor					$1,616,947	13.790
TOTAL FIXED OPERATING COSTS					**$8,084,733**	**68.949**
VARIABLE OPERATING COSTS						
						$/kWh-net
Maintenance Material Cost					$3,619,739	0.004
Consumables	Consumption Initial	Consumption /Day	Unit Cost	Initial Cost		
Water(/1000 gallons)		883	0.43		$127,212	0.000
Chemicals						
MU & WT Chem.(lbs)	78,885	2,629	0.16	$12,284	$137,502	0.000
Carbon (Mercury Removal) (lb.)			6.50			
COS Catalyst (lb)			0.60			
Flux (limestone-ton)	879	29.3	20.00	$17,582	$196,806	0.000
O2 (ton)		576.6	34.50		$6,680,386	0.007
Methanol (ton)	12	0.4	282.00	$3,384	$37,878	0.000
Subtotal Chemicals				$33,251	$7,052,571	0.007
Other						
Supplemental Fuel(mmBtu)		75.4	7.00		$177,279	0.000
Gases,N2 (ton)	1,587	52.9	17.00		$302,031	0.000
Auxiliary Power (MW/hr)			40.00			
Subtotal Other					$479,309	0.001
Subtotal-Other						
Waste Disposal						
Spent Mercury Catalyst (lb.)			0.25			
Flyash (ton)						
Bottom Ash/Slag (ton)		165.4	16.00		$888,898	0.001
Subtotal-Waste Disposal					$888,898	0.001
By-products & Emissions						
Sulfur(tons)		36.0	25.00		($302,119)	0.000
Subtotal By-Products					($302,119)	0.000
TOTAL VARIABLE OPERATING COSTS					**$11,865,610**	**0.013**
Fuel(ton)	34,347	1,145	33.00	$1,133,458	**$12,687,174**	**0.013**

This page is intentionally left blank

IX.17 CONCLUSION

A conceptual design and cost estimate of an industrial size reference syngas to power production plant using a single operating BGL 1000 Gasifier were developed. The syngas cleanup system consists of a Rectisol process for removal of sulfur and other contaminants from the syngas and a Claus process for converting H_2S in the syngas to elemental sulfur. The syngas is used as fuel in a combustion turbine combined cycle to produce the electric power product. The estimated performance characteristics of the plant are as follows:

- Coal Consumption: 95,409 lb/hr
- Coal Thermal Input (HHV): 1,118 MMBtu/hr
- Limestone Consumption: 2,442 lb/hr
- Oxygen Consumption: 48,623 lb/hr
- Nitrogen Consumption: 135,833 lb/hr
- Net Electric Power Generated: 117,354 kWe
- Elemental Sulfur Co-product: 3,000 lb/hr
- Slag Production: 13,787 lb/hr

The study was based on purchase of oxygen and nitrogen from a gas supplier who owns and operates an ASU on-site. The gas supplier is responsible for ASU utilities. For the capacity required for the syngas production plant, the electric power consumption of the ASU is estimated by a supplier to be about 9,700 kWe.

The capital cost of the Syngas to Power Reference Plant is estimated to total about $202.6 million in June 2005 dollars, about $1,730/kWe net product power, including professional services and contingency, but not including owner's costs. The annual fixed O&M cost is estimated to be about $6.1 million ($69/kWe net product power). The annual variable O&M cost is estimated to total about $24.6 million (about $0.026/kWh net product energy), with the non-fuel variable O&M cost portion being about $11.9 million, or

$0.013/kWh net product energy, and the fuel cost portion being about $12.7 million, or about $0.013/kWh net product energy.

This page is intentionally left blank

IX.18 MAJOR EQUIPMENT LIST

IX.18.1 GASIFIER PROCESS PACKAGE

Coal / Limestone Feed Lock
Quantity 2
Carbon Steel
Nominal vessel diameter: 8 ft.
Nominal vessel height: 16 ft.
Nominal pressure: 500 psia

Gasifier
Quantity 2
Carbon Steel, Jacketed Shell
Nominal shell diameter: 14 ft.
Nominal height: 44 ft.
Nominal pressure: 500 psia
Refractory
Oxygen/Steam Injector
Tar/oil injector

Slag Quench Vessel
Quantity 2
Carbon Steel Vessel
Nominal vessel diameter: 12 ft.
Nominal vessel height: 17 ft.
Nominal pressure: 500 psia

Slag Lock
Quantity 2
Carbon Steel Vessel
Nominal vessel diameter: 9 ft.
Nominal vessel height: 14 ft.
Nominal pressure: 500 psia

Wash Cooler
Quantity 2
Nominal diameter: 6 ft.
Nominal height: 20 ft.

Waste Heat Exchanger (Primary HX)
Quantity 1
Nominal pressure: 500 psia
Temperature: 300°F – 400°F
Outlet steam pressure: 75 psia
Outlet steam temperature: 308°F
Duty: 0.17 MMBtu/hr

Syngas Cooling System
Quantity 1
Shell and tube (gas tubeside)
Nominal pressure: 340 psia
Temperature: 95°F – 315°F
- Syngas Cooler 1
- Syngas Cooler 2
- Syngas Cooler 3

Liquor Separation and Tar Recycle System
Quantity 1
- Liquor Coolers
- Tar Separator
- Condensate Separator
- Liquid Products Tank

IX.18.2 WASTE WATER TREATMENT SYSTEM

Towers

Solvent Extraction Column

Type	Agitated column
Quantity	1
Diameter	2 ft, 6 inch
Height	30 ft
Number of Trays	20
Pressure	30 psia
Temperature	150 F
Materials of Construction	316 Stainless

Solvent Recovery Column

Type	Packed column
Quantity	1
Diameter	2 ft, 4 inch
Height	30 ft
Number of Trays	15
Pressure	30 psia
Temperature	500 F
Materials of Construction	316 Stainless

Sour Gas Scrubber

Type	Packed column
Quantity	1
Diameter	2 ft
Height	30 ft
Number of Trays	15
Pressure	50 psia
Temperature	300 F
Materials of Construction	316 Stainless

Process Reactors

Biological Reactor

Type	Vertical
Quantity	1
Diameter	16 ft
Height	20 ft
Pressure	15 psia
Temperature	100 F
Materials of Construction	Rubber-lined carbon steel

Tanks

Clean Solvent Storage Tank

Type	Horizontal
Quantity	1
Diameter	3 ft
Length	9 ft
Pressure	20 psia
Temperature	200 F
Materials of Construction	Carbon Steel

Caustic Storage Drum

Type	Horizontal
Quantity	1
Diameter	4 ft
Length	12 ft
Pressure	20 psia
Temperature	100 F
Materials of Construction	Carbon Steel

Heat Exchangers

Solvent Column Reboiler

Type	Shell and tube
Quantity	1
Fluid (Hot/Cold)	MP Steam / Column Bottoms
Duty	0.42 MMBtu/hr
Area	63 ft2
Pressure	30 psia
Temperature	500 F
Materials of Construction	Carbon Steel

Solvent Column Condenser

Type	Shell and Tube
Quantity	1
Fluid (Hot/Cold)	Column Overheads / Cooling Water
Duty	0.27 MMBtu/hr
Area	42 ft2
Pressure	30 psia
Temperature	400 F
Materials of Construction	316 Stainless

Sour Gas Column Reboiler

Type	Shell and Tube
Quantity	1
Fluid (Hot/Cold)	LP Steam / Column Bottoms
Duty	0.312 MMBtu/hr
Area	120 ft2
Pressure	50 psia
Temperature	400 F
Materials of Construction	Carbon Steel

Sour Gas Column Condenser

Type	Shell and Tube
Quantity	1
Fluid (Hot/Cold)	Column Overheads / Cooling Water
Duty	0.1 MMBtu/hr
Area	17 ft2
Pressure	50 psia
Temperature	300 F
Materials of Construction	316 Stainless

Compressors

Air Compressor

Type	Centrifugal
Quantity	1
Fluid	Air
Work	70 hp
Pressure Rise	5 psi
Outlet Pressure	20 psia
Temperature	200 F
Materials of Construction	Carbon Steel

Miscellaneous

Water Clarifier

Quantity	1 operating
Fluid	10% TSS Water @ 30 gpm
Temperature	100 F

IX.18.3 RECTISOL SYSTEM

Towers

Rectisol Absorber

Type	Tray column
Quantity	1
Diameter	7 ft
Height	100 ft
Number of Trays	50
Pressure	330 psia
Temperature	-60 to 10 F
Materials of Construction	316 Stainless

Flash Regenerator

Type	Tray column
Quantity	1
Diameter	3 ft
Height	38 ft
Number of Trays	17
Pressure	330 psia
Temperature	-35 to 50 F
Materials of Construction	316 Internals, Carbon Steel

Hot Regenerator

Type	Tray column
Quantity	1
Diameter	4 ft
Height	30 ft
Number of Ideal Stages	15
Pressure	50 psia
Temperature	100-500 F
Materials of Construction	316 Stainless

Methanol Stripper

Type	Packed column
Quantity	1
Diameter	3 ft, 6 inches
Height	25 ft
Number of Ideal Stages	20
Pressure	80 psia
Temperature	300 F
Materials of Construction	Carbon steel shell
Packing Material	1 inch ceramic Raschig rings

Package Units

Refrigeration System

Refrigerant	Propylene
Quantity	1
Duty	7 MMBtu/hr (580 ton)

Tanks

Pre-wash Flash Tank

Type	Vertical
Quantity	1
Diameter	1 ft, 6 inch
Total Vessel Height	5 ft
Liquid Level Height	2 ft
Pressure	50 psia
Temperature	100 F
Materials of Construction	Carbon Steel

BTX Overflow Decanter

Type	Horizontal, Skimmer Weir
Quantity	1
Height	2 ft
Length	4 ft
Width	2 ft
Pressure	20 psia
Temperature	50 F
Materials of Construction	Carbon Steel

Heat Exchangers

Feed Gas Cooler

Type	Shell and Tube
Quantity	1
Fluid (Hot/Cold)	Raw Syngas / Treated Syngas
Duty	5.2 MMBtu/hr
Area	16,827 ft2
Pressure	400 psia
Temperature	-20 to 100 F
Materials of Construction	Carbon Steel

Treated Gas Exchanger

Type	Shell and Tube
Quantity	1
Fluid (Hot/Cold)	Absorber Bottoms / Treated Syngas
Duty	2.6 MMBtu/hr
Area	9,869 ft2
Pressure	400 psia
Temperature	-60 to 0 F
Materials of Construction	316 Stainless

Inter-stage Wash Cooler

Type	Shell and Tube
Quantity	1
Fluid (Hot/Cold)	Methanol / Propylene
Duty	4.3 MMBtu/hr
Area	3,222 ft2
Pressure	400 psia
Temperature	-60 F
Materials of Construction	316 Stainless

Lean Methanol Cooler

Type	Shell and Tube
Quantity	1
Fluid (Hot/Cold)	Methanol / Propylene
Duty	17.5 MMBtu/hr
Area	4,680 ft2
Pressure	400 psia
Temperature	-60 F
Materials of Construction	316 Stainless

Heat Exchangers (continued)

Hot Regenerator Overheads Condenser

Type	Shell and Tube
Quantity	1
Fluid (Hot/Cold)	Overheads / Cooling Water
Duty	0.9 MMBtu/hr
Area	436 ft2
Pressure	100 psia
Temperature	100 F
Materials of Construction	316 Stainless

Hot Regenerator Reboiler

Type	Shell and Tube
Quantity	1
Fluid (Hot/Cold)	LP Steam / Hot Regenerator Bottoms
Duty	5.3 MMBtu/hr
Area	785 ft2
Pressure	200 psia
Temperature	300 F
Materials of Construction	Carbon Steel

Methanol Stripper Feed Heater

Type	Shell and Tube
Quantity	1
Fluid (Hot/Cold)	LP Steam / Column Feed
Duty	0.12 MMBtu/hr
Area	20 ft2
Pressure	100 psia
Temperature	200 F
Materials of Construction	Carbon Steel

Methanol Stripper Overheads Condenser

Type	Shell and Tube
Quantity	1
Fluid (Hot/Cold)	Overheads / Cooling Water
Duty	2.7 MMBtu/hr
Area	224 ft2
Pressure	100 psia
Temperature	200 F
Materials of Construction	Carbon Steel

Heat Exchangers (continued)

Methanol Stripper Reboiler

Type	Shell and Tube
Quantity	1
Fluid (Hot/Cold)	LP Steam / Column Bottoms
Duty	2.9 MMBtu/hr
Area	753 ft2
Pressure	100 psia
Temperature	300 F
Materials of Construction	Carbon Steel
Temperature	300 F
Materials of Construction	316 SS

Compressors

Flash Regenerator Compressor

Type	Centrifugal
Quantity	1
Fluid	Syngas
Work	600 hp
Pressure Rise	280 psi
Outlet Pressure	300 psia
Temperature	500 F
Materials of Construction	Carbon Steel

Pumps

Lean Methanol Pump

Type	Centrifugal
Quantity	1 operating / 1 spare
Fluid	Methanol @ 800 gpm
Work	200 hp
Pressure Rise	200 psi
Outlet Pressure	350 psia
Temperature	300 F
Materials of Construction	316 clad on Carbon Steel

Rich Methanol Pump

Type	Centrifugal
Quantity	1 operating / 1 spare
Fluid	Methanol @ 800 gpm
Work	100 hp
Pressure Rise	100 psi
Outlet Pressure	250 psia
Temperature	100 F
Materials of Construction	316 clad on Carbon Steel

Hot Regenerator Bottoms Pump

Type	Centrifugal
Quantity	1 operating / 1 spare
Fluid	Methanol @ 50 gpm
Work	30 hp
Pressure Rise	23 psi
Outlet Pressure	50 psia
Temperature	120 F
Materials of Construction	Carbon Steel

BTX Bottoms Pump

Type	Centrifugal
Quantity	1 operating / 1 spare
Fluid	Methanol @ 10 gpm
Work	20 hp
Pressure Rise	30 psi
Outlet Pressure	80 psia
Temperature	100 F
Materials of Construction	Carbon Steel

Pumps (continued)

Methanol Stripper Pump

Type	Centrifugal
Quantity	1 operating / 1 spare
Fluid	Methanol @ 30 gpm
Work	10 hp
Pressure Rise	5 psi
Outlet Pressure	40 psia
Temperature	150 F
Materials of Construction	Carbon Steel

Methanol Stripper Bottoms Pump

Type	Centrifugal
Quantity	1 operating / 1 spare
Fluid	Methanol @ 30 gpm
Work	10 hp
Pressure Rise	5 psi
Outlet Pressure	40 psia
Temperature	150 F
Materials of Construction	Carbon Steel

IX.18.4 CLAUS SYSTEM

Towers

Water Wash Tower

Type	Tray column
Quantity	1
Diameter	5 ft
Height	40 ft
Number of Trays	15
Pressure	30 psia
Temperature	150 F
Materials of Construction	316 Stainless

Process Reactors

Claus Furnace

Type	Horizontal
Quantity	1
Diameter	5 ft
Height	15 ft
Pressure	50 psia
Temperature	2,500 F
Catalyst Volume	N/A
Catalyst Life	None
Materials of Construction	Refractory-lined carbon steel

Claus Sulfur Converter No. 1

Type	Fixed-bed
Quantity	1
Diameter	5 ft
Height	14 ft
Pressure	30 psia
Temperature	600 F
Catalyst Volume	200 ft3
Catalyst Life	1 year
Materials of Construction	Carbon Steel

Claus Sulfur Converter No. 2

Type	Fixed-bed
Quantity	1
Diameter	5 ft
Height	14 ft
Pressure	30 psia
Temperature	600 F
Catalyst Volume	200 ft3
Catalyst Life	1 year
Materials of Construction	Carbon Steel

Hydrogenation Reactor

Type	Fixed-bed
Quantity	1
Diameter	4 ft, 6 inch
Height	14 ft
Pressure	30 psia
Temperature	600 F
Catalyst Volume	160 ft3
Catalyst Life	1 year
Materials of Construction	Carbon Steel

Tanks

Medium Pressure Steam Drum

Type	Horizontal
Quantity	1
Diameter	8 ft
Length	24 ft
Pressure	700 psia
Temperature	500 F
Materials of Construction	Carbon Steel

Low Pressure Steam Drum

Type	Horizontal
Quantity	1
Diameter	4 ft
Length	12 ft
Pressure	120 psia
Temperature	500 F
Materials of Construction	Carbon Steel

Sulfur Storage Pit

Type	In-ground pit
Quantity	1
Height	10 ft
Length	12 ft
Width	7 ft
Pressure	15 psia
Temperature	300 F
Materials of Construction	Concrete, epoxy lined

Sulfur Storage Tank

Type	Vertical
Quantity	1
Diameter	40 ft
Height	42 ft
Pressure	20 psia
Temperature	500 F
Materials of Construction	Carbon Steel, epoxy lined

Heat Exchangers

Waste Heat Boiler

Type	Fired Tube
Quantity	1
Fluid (Hot/Cold)	Claus gas / MP Steam
Duty	6.03 MMBtu/hr
Area	451 ft2
Pressure	600 psia
Temperature	1,600 F
Materials of Construction	Stainless Steel

Acid Gas Heater

Type	Shell and Tube
Quantity	1
Fluid (Hot/Cold)	MP Steam / Acid Gas
Duty	1.16 MMBtu/hr
Area	352 ft2
Pressure	600 psia
Temperature	600 F
Materials of Construction	316 Stainless

Oxidant Heater

Type	Shell and Tube
Quantity	1
Fluid (Hot/Cold)	MP Steam / Air
Duty	0.312 MMBtu/hr
Area	128 ft2
Pressure	600 psia
Temperature	600 F
Materials of Construction	Carbon Steel

Sour Gas Heater

Type	Shell and Tube
Quantity	1
Fluid (Hot/Cold)	MP Steam / Sour Gas
Duty	0.1 MMBtu/hr
Area	30 ft2
Pressure	600 psia
Temperature	600 F
Materials of Construction	316 Stainless

Heat Exchangers (continued)

Claus Reactor No. 1 Preheater

Type	Shell and Tube
Quantity	1
Fluid (Hot/Cold)	MP Steam / Claus Gas
Duty	0.711 MMBtu/hr
Area	448 ft2
Pressure	600 psia
Temperature	600 F
Materials of Construction	Carbon Steel

Claus Reactor No. 2 Preheater

Type	Shell and Tube
Quantity	1
Fluid (Hot/Cold)	MP Steam / Claus Gas
Duty	0.42 MMBtu/hr
Area	161 ft2
Pressure	600 psia
Temperature	600 F
Materials of Construction	Carbon Steel

Hydrogenation Reactor Preheater

Type	Shell and Tube
Quantity	1
Fluid (Hot/Cold)	MP Steam / Claus Tail Gas
Duty	1.3 MMBtu/hr
Area	590 ft2
Pressure	600 psia
Temperature	600 F
Materials of Construction	Carbon Steel

Hydrogenation Reactor Cooler

Type	Shell and Tube
Quantity	1
Fluid (Hot/Cold)	Claus Tail Gas / LP Steam
Duty	1.1 MMBtu/hr
Area	386 ft2
Pressure	100 psia
Temperature	400 F
Materials of Construction	Carbon Steel

Heat Exchangers (continued)

Sulfur Condenser No. 1

Type	Shell and Tube
Quantity	1
Fluid (Hot/Cold)	Claus Gas-Sulfur / LP Steam
Duty	1.71 MMBtu/hr
Area	453 ft2
Pressure	100 psia
Temperature	400 F
Materials of Construction	316

Sulfur Condenser No. 2

Type	Shell and Tube
Quantity	1
Fluid (Hot/Cold)	Claus Gas-Sulfur / LP Steam
Duty	1.44 MMBtu/hr
Area	627 ft2
Pressure	100 psia
Temperature	400 F
Materials of Construction	316

Sulfur Condenser No. 3

Type	Shell and Tube
Quantity	1
Fluid (Hot/Cold)	Claus Gas-Sulfur / LP Steam
Duty	0.77 MMBtu/hr
Area	453 ft2
Pressure	100 psia
Temperature	400 F
Materials of Construction	316

Sulfur Storage Heater

Type	Bayonet
Quantity	1
Fluid (Hot/Cold)	MP Steam / Molten Sulfur
Duty	10 MMBtu/hr
Area	500 ft2
Pressure	600 psia
Temperature	400 F
Materials of Construction	316

Compressors

Air Compressor	
Type	Centrifugal
Quantity	1
Fluid	Air
Work	130 hp
Pressure Rise	20 psi
Outlet Pressure	35 psia
Temperature	300 F
Materials of Construction	Carbon Steel

Pumps

Medium Pressure BFW Pump

Type	Centrifugal
Quantity	1 operating / 1 spare
Fluid	Water @ 150 gpm
Work	100 hp
Pressure Rise	30 psi
Outlet Pressure	700 psia
Temperature	600 F
Materials of Construction	Carbon Steel

Low Pressure BFW Pump

Type	Centrifugal
Quantity	1 operating / 1 spare
Fluid	Water @ 100 gpm
Work	50 hp
Pressure Rise	30 psi
Outlet Pressure	100 psia
Temperature	400 F
Materials of Construction	Carbon Steel

Wash Water Tower Pump

Type	Centrifugal
Quantity	1 operating / 1 spare
Fluid	Water @ 500 gpm
Work	30 hp
Pressure Rise	10 psi
Outlet Pressure	30 psia
Temperature	120 F
Materials of Construction	Carbon Steel

Sulfur Pump

Type	Centrifugal
Quantity	1 operating / 1 spare
Fluid	Molten Sulfur @ 50 gpm
Work	20 hp
Pressure Rise	5 psi
Outlet Pressure	20 psia
Temperature	400 F
Materials of Construction	316 Stainless Steel

Skids

Molten Sulfur Truck Loading Skid

Quantity	1 operating
Fluid	Molten Sulfur @ 200 gpm
Temperature	300 F

IX.18.5 GAS TURBINE/GENERATOR SYSTEM

Towers

Nitrogen Humidification Tower

Type	Tray Column
Quantity	1
Diameter	6 ft, 6 inch
Height	40 ft
Number of Trays	15
Pressure	450 psia
Temperature	400 F
Materials of Construction	Carbon Steel

Syngas Humidification Tower

Type	Tray Column
Quantity	1
Diameter	7 ft
Height	50 ft
Number of Trays	20
Pressure	450 psia
Temperature	400 F
Materials of Construction	316 SS Internals, Carbon Steel Shell

Heat Exchangers

Nitrogen Loop Heater 1

Type	Shell and Tube
Quantity	1
Fluid (Hot/Cold)	Nitrogen / BFW
Duty	12.5 MMBtu/hr
Area	3,997 ft2
Pressure	450 psia
Temperature	400 F
Materials of Construction	Carbon Steel

Nitrogen Loop Heater 2

Type	Shell and Tube
Quantity	1
Fluid (Hot/Cold)	Nitrogen / BFW
Duty	5 MMBtu/hr
Area	700 ft2
Pressure	450 psia
Temperature	400 F
Materials of Construction	Carbon Steel

Nitrogen Loop Heater 3

Type	Shell and Tube
Quantity	1
Fluid (Hot/Cold)	Nitrogen / IP Steam
Duty	33 MMBtu/hr
Area	9,003 ft2
Pressure	650 psia
Temperature	600 F
Materials of Construction	Carbon Steel

Syngas Loop Heater 1

Type	Shell and Tube
Quantity	1
Fluid (Hot/Cold)	Syngas / IP Steam
Duty	17 MMBtu/hr
Area	3,990 ft2
Pressure	450 psia
Temperature	400 F
Materials of Construction	304L clad on Carbon Steel

Heat Exchangers (continued)

Syngas Loop Heater 2

Type	Shell and Tube
Quantity	1
Fluid (Hot/Cold)	Syngas / IP Steam
Duty	5.5 MMBtu/hr
Area	750 ft2
Pressure	450 psia
Temperature	400 F
Materials of Construction	304L clad on Carbon Steel

Syngas Loop Heater 3

Type	Shell and Tube
Quantity	1
Fluid (Hot/Cold)	Syngas / IP Steam
Duty	37 MMBtu/hr
Area	10,100 ft2
Pressure	650 psia
Temperature	600 F
Materials of Construction	304L clad on Carbon Steel

Pumps

Humidification Loop Water Pump	Nitrogen
Type	Centrifugal
Quantity	1 operating / 1 spare
Fluid	Water @ 340 gpm
Work	120 hp
Pressure Rise	130 psi
Outlet Pressure	425 psia
Temperature	400 F
Materials of Construction	Carbon Steel

Humidification Loop Water Pump	Syngas
Type	Centrifugal
Quantity	1 operating / 1 spare
Fluid	Water @ 420 gpm
Work	140 hp
Pressure Rise	150 psi
Outlet Pressure	425 psia
Temperature	400 F
Materials of Construction	Carbon Steel

Skid Units

GE 6FA Gas Turbine/Generator

Dual Fuel	Desulfurized Syngas, Natural gas
Power Output	92 MW
Phase/Frequency/Voltage	3/60 Hz/13.8kV

Compressors

Nitrogen Compressor

Type	4-stage, Intercooled, Centrifugal
Quantity	1
Fluid	Nitrogen, 29,000 acfm
Work	10,000 hp
Pressure Rise	310 psi
Outlet Pressure	450 psia
Temperature	400 F
Materials of Construction	Carbon Steel

Tail Gas Compressor

Type	Centrifugal
Quantity	1
Fluid	Rectisol Tail Gas, 2,300 acfm
Work	1,100 hp
Pressure Rise	310 psi
Outlet Pressure	450 psia
Temperature	400 F
Materials of Construction	Carbon Steel

IX.18.6 STEAM TURBINE AND HRSG SYSTEMS

Heat Exchangers

HRSG for 6FA

Type	Shell and Tube
Quantity	1
Fluid (Hot/Cold)	Flue Gas / BFW and Steam
Duty	4,820 MMBtu/hr
Pressure	1 psig
Temperature	1,200 F
Materials of Construction	Carbon Steel

Condenser

Type	Shell and Tube
Quantity	1
Fluid (Hot/Cold)	Steam / Cooling Water
Duty	240 MMBtu/hr
Pressure	2” Hg
Temperature	110 F
Materials of Construction	Carbon Steel

Pumps

Condensate

Type	Centrifugal
Quantity	1 operating / 1 spare
Fluid	Water @ 530 gpm
Work	250 hp
Pressure Rise	249 psi
Outlet Pressure	250 psia
Temperature	400 F
Materials of Construction	Carbon Steel

High Pressure BFW

Type	Centrifugal
Quantity	1 operating / 1 spare
Fluid	Water @ 800 gpm
Work	1,000 hp
Pressure Rise	1,665 psi
Outlet Pressure	1,690 psia
Temperature	400 F
Materials of Construction	Carbon Steel

Intermediate Pressure BFW

Type	Centrifugal
Quantity	1 operating / 1 spare
Fluid	Water @ 100 gpm
Work	50 hp
Pressure Rise	750 psi
Outlet Pressure	800 psia
Temperature	400 F
Materials of Construction	Carbon Steel

Low Pressure BFW

Type	Centrifugal
Quantity	1 operating / 1 spare
Fluid	Water @ 100 gpm
Work	50 hp
Pressure Rise	450 psi
Outlet Pressure	500 psia
Temperature	400 F
Materials of Construction	Carbon Steel

Skid Units

Steam Turbine	
Type	Non-reheat, extraction
Power Output	42 MW
Throttle Pressure, psia	1,265
Throttle Temperature, F	950
Extraction Pressure, psia	515
Extraction Pressure, psia	350
Exhaust Pressure, psia	1.0

CIRCULATING WATER SYSTEM

Plume-abated mechanical draft cooling tower
- Cooling Duty: 300 MMBtu/hr
- Circulating water flow rate: 33,320 gpm

Pumps

IX.18.7 COAL AND LIMESTONE RECEIVING AND HANDLING SYSTEMS

Item No.	Equipment	Quantity	Flow Rate TPH	Specs	weight	Comments
	Coal handling system					
1	Truck Scale	1		200,000 lb, 80'x11', 8 load cells	33,800Lb	
2	Coal Reclaim Feeder	1	250	40'-0" lg		
3	Vib. Screen	1	250	8' wx16 lg		
4	Coal Silos Loading HAC	1	250			
5	Coal Scale	1	250			
6	Magnetic Separator	1	250	42" w x 66" lg x 30" h		with rectifier
7	Overs Conveyor (Optional)					
8	Reversible Belt Conveyor	1	250			
9	Coal Silo A	1		430T, 32' dia. X 70' high		
10	Coal Silo B	1		430T, 32' dia. X 70' high		
11	Coal Maint Gates A	1		24" sq. manual		
12	Coal Maint Gates B	1		24" sq. manual		
13	Coal Diverter Gate A	1		24" sq. Pneumatic		
14	Coal Diverter Gate B	1		24" sq. Pneumatic		
15	Coal Silo discharge feeder A	1		24"x 44'-0"		
16	Coal Silo discharge feeder B	1	50	24"X 48'-0"		
	Limestone handling system					
17	Loading Hopper	1		1000 lbs 5'sq.x3' high		
18	Limestone Reclaim Feeder	1	10	12" dia. X 10'-0"		
19	Limestone Silos Loading HAC	1	10			
20	Limestone Scale	1				
21	limestone Silo	1		22T, 12' dia. X 28'		
22	Limestone Maint Gate	1		24" sq. manual		
23	Limestone Diverter Gate	1		24" sq. Pneumatic		
24	Limestone Silo discharge feeder A	1		12" x 12'-0"		
25	Limestone Silo discharge feeder B	1		12" x 18'-0"		
	Coal/Limestone					
26	Gasifier Feed HAC A	1				
27	Gasifier Feed HAC B	1				
28	Weigh Hopper	1		50T, 12' dia. 18'		
29	Weigh Hopper Load Cells	4				Add 4 Load cells
30	Loss weigh Hopper	1		7T, 6' dia. X 10'		

This page is intentionally left blank

Industrial Size Gasification for Syngas, Substitute Natural Gas and Power Production

Section X - Case 4A Conceptual Design Description
SNG to Power Reference Plant – Illinois #6 Coal

DOE/NETL-401 / 040607

FR-53769211

April 2007

Disclaimer

This report was prepared as an account of work sponsored by an agency of the United States Government. Neither the United States Government nor any agency thereof, nor any of their employees, makes any warranty, express or implied, or assumes any legal liability or responsibility for the accuracy, completeness, or usefulness of any information, apparatus, product, or process disclosed, or represents that its use would not infringe privately owned rights. Reference therein to any specific commercial product, process, or service by trade name, trademark, manufacturer, or otherwise does not necessarily constitute or imply its endorsement, recommendation, or favoring by the United States Government or any agency thereof. The views and opinions of authors expressed therein do not necessarily state or reflect those of the United States Government or any agency thereof.

Industrial Size Gasification for Syngas, Substitute Natural Gas and Power Production

Section X - Case 4A Conceptual Design Description
SNG to Power Reference Plant – Illinois #6 Coal

DOE/NETL-401 / 040607

FR-53769211

April 2007

NETL Contact: DE-AC26-04NT41817.401.01.05.002

Office of Systems Analysis and Planning Support

Prepared by:

Leonard M. Bartone, Jr., P.E.
Jay White
WorleyParsons Group Inc.

Research and Development Solutions, LLC.

National Energy Technology Laboratory
www.netl.doe.gov

This page is intentionally left blank

SECTION X TABLE OF CONTENTS

Section X Table of Contents ..... *X-i*

Section X List of Exhibits ..... *X-iii*

Terminology ..... *X-v*

Acknowledgements ..... *X-vii*

X.1 Summary *X-1*

X.2 System Description and Performance *X-5*

X.2.1 System Description **X-5**

X.2.2 Heat & Material Balance, Performance Estimates, and Emissions Estimates **X-9**

X.3 Plot Plan and Site Layout *X-59*

X.4 Solids Handling Systems Descriptions *X-63*

X.4.1 Coal Receiving, Storage, and Handling **X-63**

X.4.1.1 Coal Receiving and Storage X-63

X.4.1.2 Coal Handling and Preparation System X-63

X.4.2 Limestone Receiving, Storage, and Handling **X-64**

X.4.2.1 Limestone Receiving and Storage X-64

X.4.2.2 Limestone Handling and Preparation System X-65

X.4.3 Coal/Limestone Gasifier Delivery System **X-65**

X.4.4 Slag Handling **X-72**

X.5 Gasifier Process Package Description *X-73*

X.5.1 Gasifier **X-73**

X.5.2 Coal/Limestone Feed System **X-75**

X.5.3 Slag Removal System **X-76**

X.5.4 Syngas Wash Cooler **X-76**

X.5.5 Waste Heat Exchanger (Primary Heat Exchanger) **X-77**

X.5.6 Syngas Cooling System **X-77**

X.5.7 Gas Liquor Separation and Tar/Oil Reinjection System **X-77**

X.6 Water-Gas Shift Reaction *X-79*

X.7 Syngas Cleanup System Description *X-81*

X.7.1 Rectisol Process Description X-81
X.7.2 Claus Process Description X-83
X.8 Methanation System X-85
X.9 Waste Water Treatment System Description X-87
X.10 Process Steam System Description X-89
X.11 Combustion Turbine Combined Cycle System X-91
X.11.1 Combustion Turbine/Generator X-91
X.11.2 HRSG X-91
X.11.3 Steam Turbine/Generator X-92
X.12 Flare System Description X-93
X.13 Circulating Water System Description X-95
X.14 Process Water Supply System X-97
X.15 Instrumentation and Control System Description X-99
X.16 Electrical System Description X-101
X.17 Air Separation Unit Description X-103
X.18 Capital and O&M Cost Estimates X-105
X.18.1 Cost Estimating Approach X-105
X.18.2 Cost Basis and Assumptions X-106
X.18.2.1 Capital Cost Basis and Assumptions X-106
X.18.2.2 Operating and Maintenance Cost Basis and Assumptions X-108
X.18.2.3 Results X-109
X.19 Conclusion X-113
X.20 Major Equipment List X-115
X.20.1 Gasifier Process Package X-115
X.20.2 Waste Water Treatment System X-117
X.20.3 Rectisol System X-121
X.20.4 Claus System X-129
X.20.5 Water-Gas Shift X-137
X.20.6 Methanation System X-143
X.20.7 Steam System X-149
X.20.8 Power Cycle Equipment X-149
X.20.9 Circulating Water System X-152
X.20.10 Coal and Limestone Receiving and Handling Systems X-153

SECTION X LIST OF EXHIBITS

Exhibit X.2-1 Sketch of Major Systems Comprising the SNG to Power Reference Plant X-8

Exhibit X.2-2 Syngas to Power Plant Estimated Performance Summary X-11

Exhibit X.2-3 Gasification and Gas Cooling Conceptual Process Flow Diagram X-13

Exhibit X.2-4 Rectisol System Conceptual Process Flow Diagram X-15

Exhibit X.2-5 Sulfur Production (Claus) System Conceptual Process Flow Diagram X-17

Exhibit X.2-6 Waste Water Treatment System Conceptual Process Flow Diagram X-19

Exhibit X.2-7 Steam Circuit Conceptual Process Flow Diagram X-21

Exhibit X.2-8 Water-Gas Shift Reaction System Conceptual Process Flow Diagram X-23

Exhibit X.2-9 Methanation System Conceptual Process Flow Diagram X-25

Exhibit X.2-10 Combustion Turbine System Conceptual Process Flow Diagram X-27

Exhibit X.2-11 Steam Turbine and HRSG System Conceptual Process Flow Diagram X-29

Exhibit X.2-12 Gasification and Gas Cooling Systems Estimated State Point Compositions and Conditions X-31

Exhibit X.2-13 Rectisol System Estimated State Point Compositions and Conditions X-35

Exhibit X.2-14 Sulfur Production (Claus) System Estimated State Point Compositions and Conditions X-39

Exhibit X.2-15 Waste Water Treatment System Estimated State Point Compositions and Conditions X-41

Exhibit X.2-16 Steam Circuit Estimated State Point Compositions and Conditions X-43

Exhibit X.2-17 Water-Gas Shift Reaction System Estimated State Point Compositions and Conditions X-47

Exhibit X.2-18 Methanation System Estimated State Point Compositions and Conditions X-51

Exhibit X.2-19 Combustion Turbine System Estimated State Point Compositions and Conditions X-55

Exhibit X.2-20 Steam Turbine & HRSG System Estimated State Point Compositions and Conditions X-57

Exhibit X.3-1 Conceptual General Equipment Arrangement and Plot Plan for SNG to Power Reference Plant X-60

Exhibit X.3-2 Conceptual Elevation of Gasification Process Installation X-61

Exhibit X.4-1 Simplified Process Flow Diagram of Coal and Limestone Receiving, Storage, and Handling System X-67

Exhibit X.4-2 Coal and Limestone Storage and Handling Systems General Arrangement X-68

Exhibit X.4-3 Example of Snake Sandwich High Angle Conveyor by Dos Santos International for Feeding Coal Silos X-69

Exhibit X.4-4 Example of Snake Sandwich High Angle Conveyor by Dos Santos International for Feeding Limestone Silo X-70

Exhibit X.4-5 Example of Snake Sandwich High Angle Conveyor by Dos Santos International for Feeding Coal/Limestone to Gasifier Hopper X-71

Exhibit X.5-1 Schematic of Gasifier X-74

Exhibit X.13-1 Estimated Circulated Cooling Water Requirements X-95

Exhibit X.14-1 Estimated Process Makeup Water Requirements X-97

Exhibit X.16-1 Estimated Electric Power Requirements Summary X-101

Exhibit X.18-1 Summary of Capital Cost Estimate X-110

Exhibit X.18-2 Estimated Annual O&M Costs X-111

TERMINOLOGY

ASU ..... Air separation unit
BEC ..... Bare erected cost
BGL ..... British Gas Lurgi
BTX ..... Benzene, Toluene, and Xylene
Btu ..... British thermal unit
ºC ..... Degrees Celsius
CC ..... Combined cycle
CO_2 ..... Carbon dioxide
CT, GT ..... Combustion turbine, synonym for gas turbine
DME ..... Dimethyl ether
DOE ..... Department of Energy (United States)
DRD ..... Design Requirements Document
EIA ..... Energy Information Administration
EPA ..... Environmental Protection Agency
°F ..... degrees Fahrenheit
FOF ..... Forced outage factor
FOR ..... Forced outage rate
fps ..... Feet per second
GE ..... General Electric
GT, CT ..... Gas turbine, synonym for combustion turbine
GWh ..... Gigawatt-hour
Hg ..... Mercury
HHV ..... Higher Heating Value
HRSG ..... Heat recovery steam generator
ID ..... Induced Draft (fan)
IDC ..... Interest during construction
IGCC ..... Integrated Gasification Combined Cycle
kW, kWe ..... Kilowatt electric
kWt ..... Kilowatt thermal
KWh ..... Kilowatt-hour
LHV ..... Lower heaving value
MDEA ..... Methyl diethanol amine
MIBK ..... Methyl Isobutyl Ketone
MW, MWe ..... Megawatt electrical
MW_t ..... Megawatt thermal
MWh ..... Megawatt-hour
NETL ..... DOE National Energy Technology Laboratory
NOx ..... Nitrous oxides
O_2 ..... Oxygen
O&M ..... Operating and Maintenance
P&W ..... Pratt & Whitney
Part. ..... Particulate emissions
POX ..... Partial Oxidation
psia ..... Pound/square inch (14.696 psi = 1 atm)
Q ..... Heat
QGESS ..... DOE/NETL Quality Guidelines for Energy System Studies
S ..... Sulfur content of fuel
scf ..... Standard cubic feet (based on 14.7psia/60°F)
SNCR ..... Selective non-catalytic reduction (for NOx control)
SNG ..... Substitute (Synthetic) Natural Gas
SO_2 ..... Sulfur dioxide
ST ..... Steam turbine
Syngas ..... Synthetic gas
T&D ..... Transmission and distribution (electrical)
t ..... Short ton (2,000 lbs)

TG .....Turbo-generator, (turbine-generator)
t/h .....Ton/hour
ton.....short ton, (2000 lbs)
t/h,tph .....Ton per hour
t/y,tpy.....Ton per year
TPC .....Total plant cost
US, U.S. .....United States
USEPA United States Environmental Protection Agency
USD, US$ ..... The United States Dollar
USDOE ..... United States Department of Energy
y, yr..... Year

ACKNOWLEDGEMENTS

This work was performed under DOE/NETL Contract No. DE-AM26-04NT41817 with Research and Development Solutions (RDS), LLC. WorleyParsons Group Inc. performed the work under a subcontract agreement with RDS, Subcontract No. 41817M2943.

The NETL Project Manager for this activity was Jeffrey Hoffmann.

The authors acknowledge the contributions of Victor Shellhorse and Bill Jones of Allied Syngas Corporation who were of considerable assistance in describing the characteristics of the British Gas Lurgi gasifier.

This page is intentionally left blank

X.1 SUMMARY

A feasibility study was performed to evaluate the technical and economic viability of coal-derived syngas and substitute natural gas (SNG) refueling of U.S. industries. The study includes the development of Reference Plant Conceptual Designs for the following application scenarios:

Case 1 – A coal-derived syngas production plant, based on the BGL 1000 gasifier being marketed in North America by Allied Syngas Corporation, with a nominal gasifier capacity of approximately 1000 million Btu/hr (MMBtu/hr) of synthesis gas.

Case 1A – Illinois #6 Coal as fuel, no hydrogen production

Case 1AH - Illinois #6 Coal as fuel, with hydrogen production

Case 1B – PRB Coal as fuel, no hydrogen production

Case 1BH - PRB Coal as fuel, with hydrogen production

Case 2 – A coal-derived SNG production plant, based on the BGL 1000 gasifier, for distribution through natural gas pipelines.

Case 2A – Illinois #6 Coal as fuel

Case 2B – PRB Coal as fuel

Case 3 – A gas turbine refueling configuration for a nominal 80 to 150 MWe (combined cycle equivalent) based on the Case 1 syngas configuration

Case 3A – Illinois #6 Coal as fuel

Case 3B – PRB Coal as fuel

Case 4 – A gas turbine refueling configuration for a nominal 80 to 150 MWe (combined cycle equivalent) based on the Case 3 SNG configuration

Case 4A – Illinois #6 Coal as fuel

Case 4B – PRB Coal as fuel

As part of this effort, a conceptual design and conceptual level capital and operating and maintenance cost estimates were developed for an SNG to Power Reference Plant, a coal-gasification SNG production plant refueling a gas turbine combined cycle. Allied Syngas Corporation and Envirotherm GmbH provided the gasifier performance and composition, temperature, and pressure of the syngas from the gasification process. A model of the gasification process integrated with the major supporting systems was developed using ASPEN Plus™ software, and mass and energy balance calculations were performed using the model. These data were used to define the functional requirements of the systems, performance estimates, and conceptual specifications of end-use equipment.

The combustion turbine selection is based on matching the SNG requirements of the combustion turbine as close as possible to the total net SNG production capability of the SNG Production Reference Plant developed in this study and described in the Conceptual Design Description – SNG Production Reference Plant in Section VIII. There are some modifications to the SNG Production Reference Plant to improve the efficiency and minimize the cost for this application. The major modifications are as follows:

- Steam for the processes in the SNG production plant as well as steam for the steam turbine system is generated in two heat recovery steam generators (HRSG), instead of in a separate syngas-fired boiler. The first HRSG is located in the methanation system and the other HRSG is located in the combustion turbine combined cycle system.
- The tailgas from the Rectisol AGR system and MIBK stripper in the waste water treatment system that were used as fuel for a fired-boiler are used as fuel in a duct burner in the HRSG for additional steam generation. The duct burner also burns some of the SNG product.

The Syngas to Power Reference Plant design is based on the requirements defined in the Conceptual Design Requirements Document (DRD) in Section V. The requirements include the following:

- Fuel for the gasifier is Illinois #6 coal. The composition of the coal is defined in the DRD.

- Limestone is used as the flux in the gasifier.
- The gasifier uses an oxidant that contains 99.5% oxygen purchased from a third party who owns and operates an air separation unit (ASU) on the site. Nitrogen for purging is also purchased from the third party.
- Electrical power for the plant auxiliaries are provided by the combustion turbine combined cycle system.
- The gasifier will produce a medium-Btu syngas
- A Rectisol process will be used for syngas cleanup.
- Elemental sulfur will be produced as a byproduct.
- A methanation process will produce an SNG meeting pipeline quality natural gas specifications as well as saturated steam in a HRSG.
- The gasifier process package design will be provided by Envirotherm/Allied Syngas Corporation and will consist of all equipment/systems from the coal/flux feed lock to the inlet of the syngas acid gas removal (AGR) system and the discharge of the slag lock, including the tar/oil separation system and reinjection system.
- The gasifier process package will include a spare gasifier complete with coal/flux feed lock, gasifier, gas wash cooler, slag quench vessel, and slag lock vessel
- The combustion turbine size for cases with combustion turbine combined cycles will match the syngas or SNG produced, as closely as possible, when using a single BGL gasifier in the gasification process. The SNG to Power Reference Plant uses a Pratt & Whitney (P&W) FT8 TwinPac. The fuel requirement of the FT8 TwinPac matches closely with the SNG output of the SNG production plant (the fuel requirement of the FT8 TwinPac is slightly less than the amount of SNG produced). Additionally, data in the 2002 Platts database (March 2002 CD from http://www.platts.com/udidata) on industrial and private electric power generators indicates that there are a large number of FT8 combustion turbines in industrial facilities.
- The combined cycle system consists of two P&W FT8 combustion turbines, one HRSG, and one steam turbine/generator.

- Capital cost estimates for the gasifier process will be based on a WorleyParsons' in-house BGL IGCC cost model utilized for previous IGCC evaluations.
- Capital cost estimates for other systems will be developed by WorleyParsons based on a combination of WorleyParsons' in-house cost data and budgetary quotes provided by equipment supplies.
- Construction labor costs will be based on Gulf Coast non-union labor rates.

This report describes a conceptual design analysis, as well as conceptual level cost estimates that are based upon approximate methods. The data developed are not at sufficient depth to be used for design or construction purposes. Cost data are only suited for planning and budget estimation purposes only, and are not of sufficient depth of detail to justify major capital investment.

The SNG to Power Reference Plant gasifies approximately 1,118 MMBtu/hr of Illinois #6 coal to co-produce about 77 MWe of net electric power and 159 MMBtu/hr of SNG meeting specifications of pipeline natural gas for export to an industrial customer(s). The net plant thermal efficiency (as defined in the DOE Quality Guidelines for Energy System Studies for a CFP plant) is estimated to be about 34.6%

The following sections provide descriptions of the major systems and equipment comprising the SNG to Power Reference Plant, estimated performance characteristics, mass and energy balances of the major systems, and capital and operating cost estimates. Although the SNG production plant in this application is essentially the same as that described in the Conceptual Design Description – SNG Production Reference Plant – Illinois #6 Coal, as previously noted, the description of the plant is also included in this document to provide a complete, stand-alone description of the SNG to Power Reference Plant.

X.2 SYSTEM DESCRIPTION AND PERFORMANCE

This section contains the system description, heat and mass balances, and performance estimates for the SNG to Power Reference Plant.

X.2.1 SYSTEM DESCRIPTION

The system utilizes an industrial size SNG production plant gasifying Illinois #6 coal in a single operating BGL 1000 gasifier to refuel a combustion turbine combined cycle system based on two P&W FT8 combustion turbines. The SNG production plant produces 34,531 lb/hr of SNG with a higher heating value (HHV) of 985 Btu/scf (22,960 Btu/lb) and lower heating value (LHV) of 887 Btu/scf (20,669 Btu/lb). Approximately 22,080 lb/hr of the SNG produced is used to fuel the combustion turbines. The exhaust from the combustion turbine is used as energy for the generation of steam in the HRSG. Additionally, about 5,540 lb/hr of the SNG produced is combined with approximately 117,000 lb/hr of tailgas from the Rectisol process and is used as supplemental fuel in the HRSG in order to enhance the HRSG flue gas temperature and to generate high-temperature superheated steam. The remaining SNG (6,905 lb/hr – approximately 20% of the SNG produced) can be used as fuel in the industrial customer's processes or is available for sale as pipeline quality natural gas. Therefore, the Syngas to Power Reference Plant co-produces fuel and power (CFP). The net electrical power generated by the plant is estimated to be about 77 MWe after the plant auxiliary power requirements are met.[a]

The combined cycle system HRSG, along with the HRSG and gas coolers located in the SNG methanation system, not only generates steam for the system steam turbine, but also generates steam required for operation of the syngas production system processes.

---

[a] Performance estimate based on published information on the performance of the P&W FT8 TwinPac fired with natural gas and has not been verified by Pratt & Whitney for the specific reference plant SNG.

Two alternative configurations were evaluated but are not presented in this report. The first alternative retained the configuration above but deleted the steam turbine generator in lieu of co-gen steam production. This plant would produce; approximately 43 MWe of electrical energy from the gas turbine generator (turbine output minus plant auxiliary load), 6,905 lb/hr of SNG product, 228,769 lb/hr of high-pressure steam at 900°F and 865 psia, and 68,750 lb/hr of low-pressure steam at 260°F and 30 psia. The second alternative would have neither HRSG duct firing nor steam turbine generator. This configuration would produce; approximately 43 MWe of electrical energy from the gas turbine generator (turbine output minus plant auxiliary load), 12,455 lb/hr of SNG product, 150,042 lb/hr of high-pressure steam at 680°F and 510 psia, and 68,750 lb/hr of low-pressure steam at 260°F and 30 psia.

A sketch showing the major processes comprising the plant is presented in Exhibit X.2-1. The plant contains the following major systems/processes:

- A gasifier process package consisting of an oxygen-fired BGL gasifier producing a medium Btu syngas; coal/limestone feed lock for introducing feedstock into the gasifier; syngas wash cooler and primary heat exchanger for cooling the syngas and removing tars, oils, and particulates from the syngas; gas liquor separation and tar/oil recycle process for removing tars and oils from syngas condensate for reinjection into the gasifier; syngas coolers for decreasing the temperature of the syngas to meet the requirements of the syngas cleanup system; and a slag quench vessel and slag lock for removing slag from the gasifier.
- A spare gasifier with coal/limestone feed lock, gas wash cooler, slag quench vessel, and slag lock vessel.
- A syngas cleanup system consisting of a Rectisol acid gas removal system (AGR) for removal and concentration of acid gases (H_2S and COS) from the syngas to levels meeting the specifications of the methanation process, and a Claus plant for producing elemental sulfur byproduct, from sulfur in the acid gas, for sale to industrial users. The Rectisol AGR system is also used to remove benzene, toluene, and xylene (naphtha-BTX) from the syngas stream for recycle to the gasifier.
- A water-gas shift reaction system for increasing the hydrogen to carbon ratio of the syngas to that required for the methanation process.

- A methanation process for producing SNG from the syngas. Waste heat is recovered in gas coolers and a HRSG.
- A waste water treatment system for removing contaminants from the liquor prior to recycling the waste water or discharging it to the environment.
- A coal receiving, storage, and delivery system for removing coal from trucks and delivering it to a coal storage area and then to the gasifier process coal feeding system.
- A limestone (flux) receiving, storage, and delivery system for removing limestone from trucks and delivering it to a limestone storage area and then to the gasifier process limestone feeding system.
- Slag handling system for collecting the slag discharged from the slag lock and transporting the slag to a storage and truck loading area.
- An air separation unit (ASU) owned and operated by a third party that provides oxygen and nitrogen to the gasification process and nitrogen to the combustion turbine combined cycle.
- A steam system for collecting steam from and distributing steam to the syngas production plant.
- Combustion turbine/generator for generating a portion of the electric power.
- HRSG for generating steam for the steam turbine power system.
- Steam turbine/generator for generating electrical power.
- Circulating water system that provides cooling water to the various systems in the plant.
- Balance of Plant systems for supporting the gasification process, including:
    - Process water supply system;
    - Flare system for combusting syngas during start-up and system upsets;
    - Air supply system;
    - Natural gas supply system;
    - Electrical system;
    - Instrumentation and control system; and
    - Chemical and byproduct storage.

Exhibit X.2-1 Sketch of Major Systems Comprising the SNG to Power Reference Plant

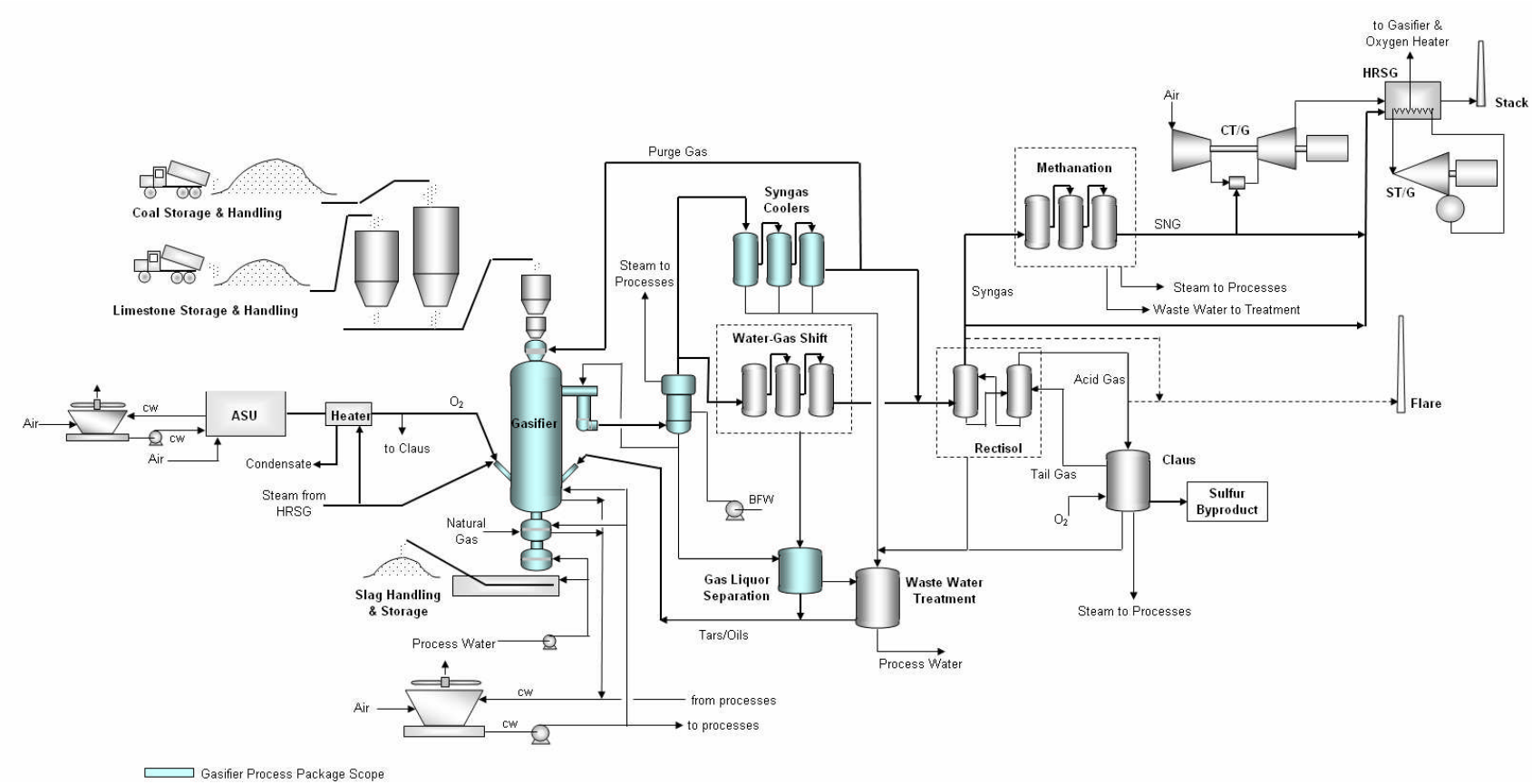

X.2.2 HEAT & MATERIAL BALANCE, PERFORMANCE ESTIMATES, AND EMISSIONS ESTIMATES

A summary of the estimated performance resulting from heat and mass balance calculations are presented in Exhibit X.2-2. Conceptual process flow diagrams of the major systems comprising the SNG to Power Reference Plant are shown in Exhibit X.2-3 through Exhibit X.2-11. Estimated state point compositions and conditions for flow streams identified with numbers in the process flow diagrams are provided in Exhibit X.2-12 through Exhibit X.2-20.

The plant consumes about 95,409 lb/hr (1,118 MMBtu/hr - HHV) of Illinois #6 coal to produce a total of 34,531 lb/hr of SNG. The majority of the SNG i(about 80%) is used to fuel a combustion turbine combined cycle, the remaining SNG is available as a product for an industrial customer(s) or for pipeline distribution. The net electrical power generated by the plant is estimated to be about 77 MWe (88.7 MWe of gross electrical power minus 11.5 MWe auxiliary power required, excluding the ASU) after the auxiliary power requirements of the plant are met.[b] About 3,000 lb/hr of elemental sulfur is produced as a co-product from the syngas cleanup system in the syngas production plant. About 13,787 lb/hr of slag is produced by the gasification process that may be sold as a product, depending on site specific factors. However, the Reference Plant evaluation assumes that the slag is sent to offsite non-hazardous waste disposal.

The overall net thermal efficiency of the Reference plant co-producing fuel and power (CFP) is estimated to be about 34.6%. The net plant thermal efficiency is defined in accordance with the DOE Quality Guidelines for Energy System Studies for CFP systems; that is, the sum of the net electrical energy and total heating value of product fuels divided by the total heating value energy of all direct and indirect input fuels. The direct fuel in this application is the coal to the gasifier. The fuel used by an electric power generating plant to generate the power required for the ASU is considered as indirect fuel in this application since the oxygen for the SNG production plant is purchased “over-the-fence” from a third party, and the cost of oxygen includes the cost of electric power for

[b] Performance estimate based on published information on the performance of the P&W FT8 TwinPac fired with natural gas and has not been verified by Pratt & Whitney for the specific reference plant SNG

the ASU. In accordance with the DOE guidelines, a fuel energy-to-electrical energy conversion HHV efficiency of 32.8% was used for the ASU power required.

The annual capacity factor of the SNG production portion of the plant, defined as the plant annual SNG production divided by the rated output times 8,760 hours[c], is expected to be about 95% with the inclusion of the spare gasifier. Information published by The Dakota Gasification Company indicates that the Great Plains Synfuels Plant has successfully operated 14 Lurgi gasifiers without a spare while maintaining an annual plant loading as high as 92%..[d] That is, the plant annually produces up to 92% of its rated output capacity. Personnel with experience at the Great Plains Synfuels Plant indicate that corrosion issues in the boiler system, which uses H_2S-rich waste gas from the Rectisol Process as fuel, has historically cost the plant over 2% in availability. The Reference Plant conceptual design for this study sends the H_2S rich gas to a Claus Unit for recovery of sulfur, and uses clean gas from the Rectisol Process as the fuel in the fired boiler. It has also been indicated that because the Great Plains Synfuels Plant has been operating at greater than design capacity, the resulting hydraulic overload of the gas liquor separation system and Phenosolvan system, and its impact on the plant cooling water system, has adversely affected annual plant capacity factor. The incorporation of a dedicated spare gasifier in the Reference Plant is expected to further increase the plant capacity factor over that achieved in the Great Plains Synfuels Plant.

It should be noted that if the SNG to power facility is located near a natural gas pipeline, or the SNG demand of the industrial customer is sufficiently high, then the SNG production facility can continue to operate producing SNG for the industrial customer's use or for distribution in the pipeline when the combined cycle power island is not operational. This would increase plant capacity factor and reduce plant operating costs on per unit of energy production basis.

---

[c] Defined in accordance with DOE Quality Guidelines for Energy System Studies

[d] CO_2 Recovery and Sequestration at Dakota Gasification Company. Daren Eliason. 2004 Gasification Technologies Conference. October 4, 2004.

Exhibit X.2-2 Syngas to Power Plant Estimated Performance Summary

Production Figures (average)	
Combustion Turbine Net Power Output, MWe[a]	50.3
Steam Turbine Net Power Output, MWe	38.4
Total Combined Cycle Net Power Output, MWe	88.7
SNG to Combustion Turbine, lb/hr (scfh x 10^6)[b]	22,086 (0.03)
Energy Content of SNG to Combustion Turbine, MMBtu/hr (HHV / LHV)	507 / 456
SNG to HRSG, lb/hr (scfh x 10^6)	5,540 (0.007)
Energy Content of SNG to HRSG, MMBtu/hr (HHV)	127
SNG Product for Export, lb/hr	6,905
Energy Content of Syngas for Export, MMBtu/hr (HHV)	159
Elemental Sulfur Product, lb/hr	2,850
Slag, lb/hr	13,787
Consumption Figures (average)	
Coal Thermal Input , MMBtu/hr (HHV)[c]	1,118
Coal Feed, lb/hr	95,409
Flux (Limestone) Feed, lb/hr	2,442
Oxygen to Gasifier and Claus Furnace, lb/hr	48,503
Cooling Makeup Water (excl. ASU), lb/hr	353,097
Process Makeup Water[d], lb/hr	136,160
Methanol, lb/hr	50
Auxiliary Electric Power (excl. ASU), kWe	11,536
ASU Electric Power, kWe	9,700
ASU Cooling Makeup Water, lb/hr	27,100
Plant Equivalent Efficiency	
Fuel and Power Energy Input[e], MMBtu/hr	1219
CFP Product Energy, MMBtu/hr	422
Net Plant Thermal Efficiency, %	34.6
Estimated Emissions	
Combustion Turbine Combined Cycle	
SO_2 , lb/MWh (lb/MMBtu)	0.036 (0.002)
NO_x, ppmvd @ 15% O_2 [f]	25
CO, ppmvd@ 15% O_2 [f]	25
CO_2, lb/MWh (lb/MMBtu)	2,356 (122)
Hg, lb/MWh (lb/trillion Btu)[g]	<1.4x10^{-5} (<.001)[3]

Note a: Performance estimate based on published information on the performance of the P&W FT8 TwinPac fired with natural gas and has not been verified by Pratt & Whitney for the specific reference plant SNG
Note b: Standard Conditions: 14.7 psia, 60°F
Note c Based on Illinois #6 coal with HHV of 11,714 Btu/lb
Note d: A detailed optimization of water recycling in the plant was not performed. An optimization study may reduce the process water makeup requirement
Note e: Coal energy plus ASU power expressed as fuel energy to utility power generation plant with HHV efficiency of 32.8%.
Note f: Without SCR or oxidation catalyst.
Note g: Based on Coal Hg content of 0.019 ppm and 90% or greater removal efficiency.

This page is intentionally left blank

Exhibit X.2-3 Gasification and Gas Cooling Conceptual Process Flow Diagram

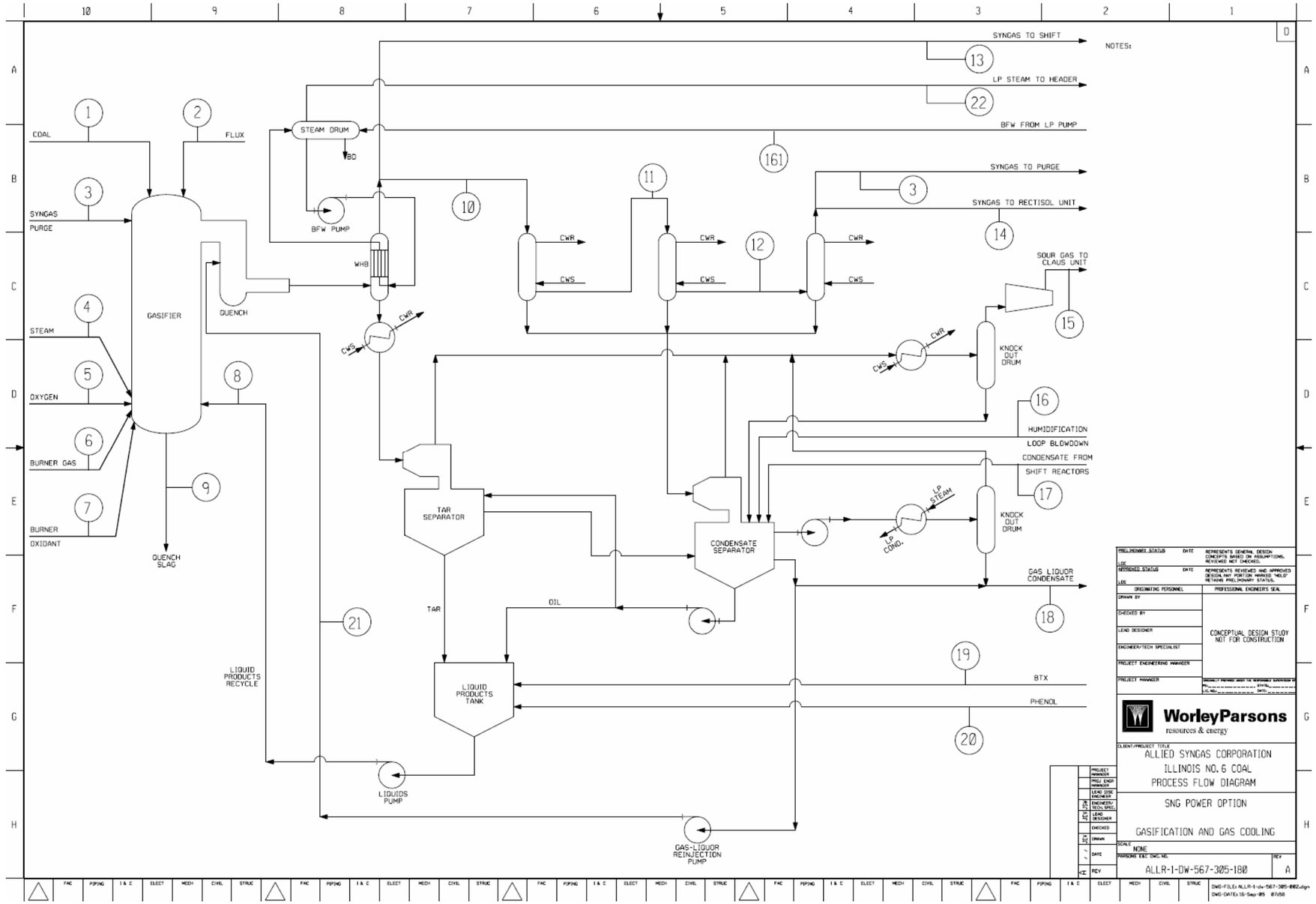

This page is intentionally left blank

Exhibit X.2-4 Rectisol System Conceptual Process Flow Diagram

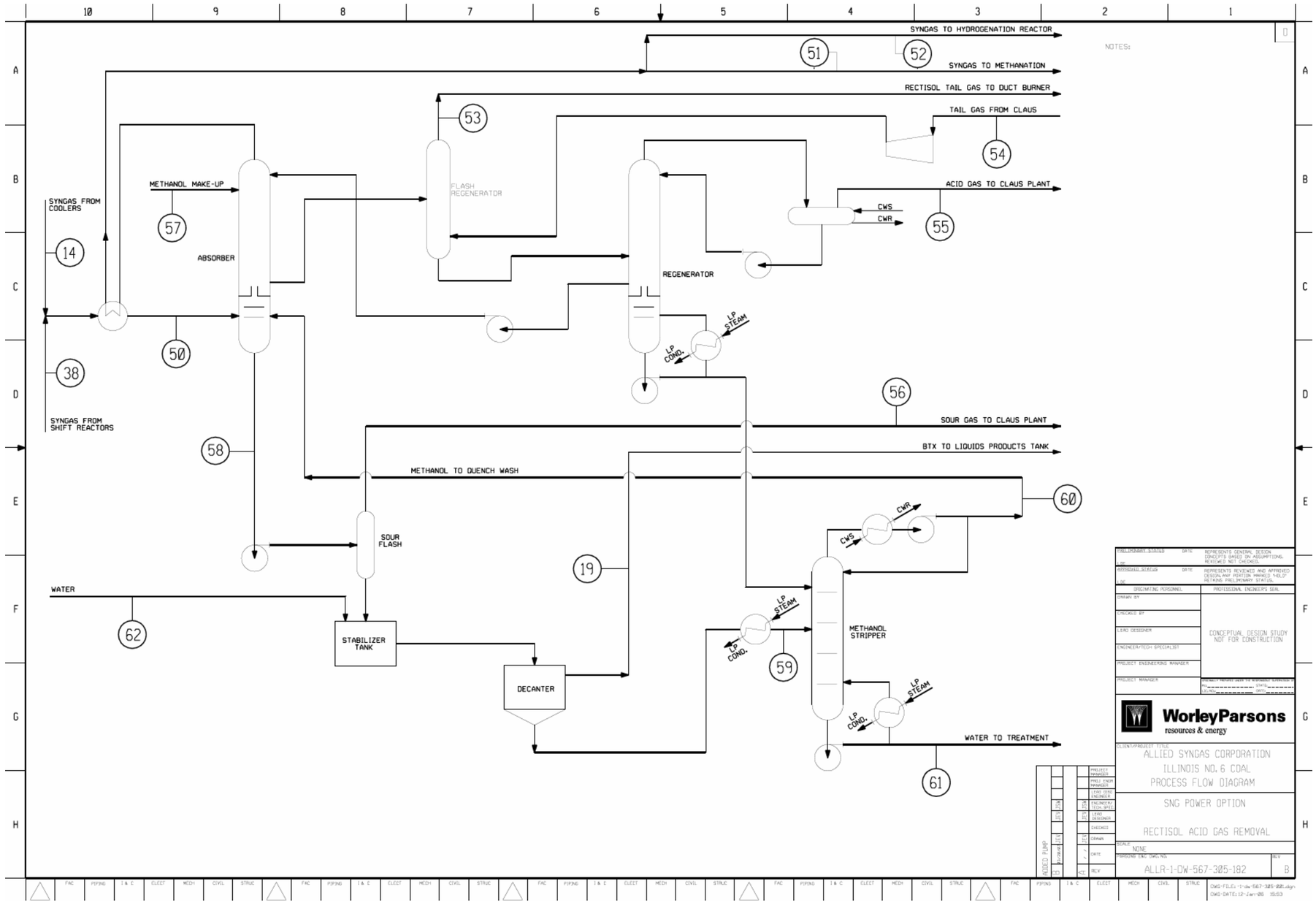

This page is intentionally left blank

Exhibit X.2-5 Sulfur Production (Claus) System Conceptual Process Flow Diagram

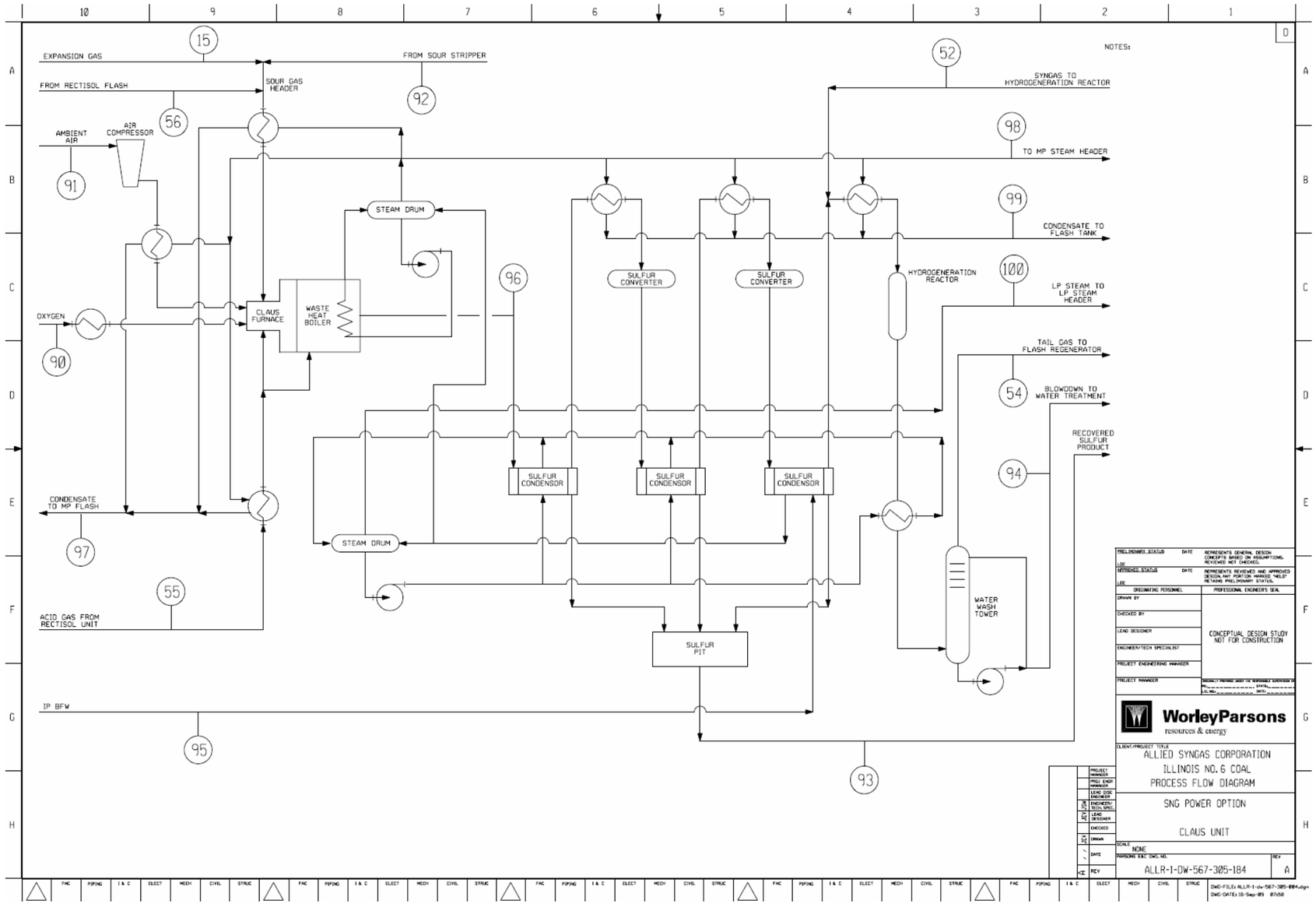

This page is intentionally left blank

Exhibit X.2-6 Waste Water Treatment System Conceptual Process Flow Diagram

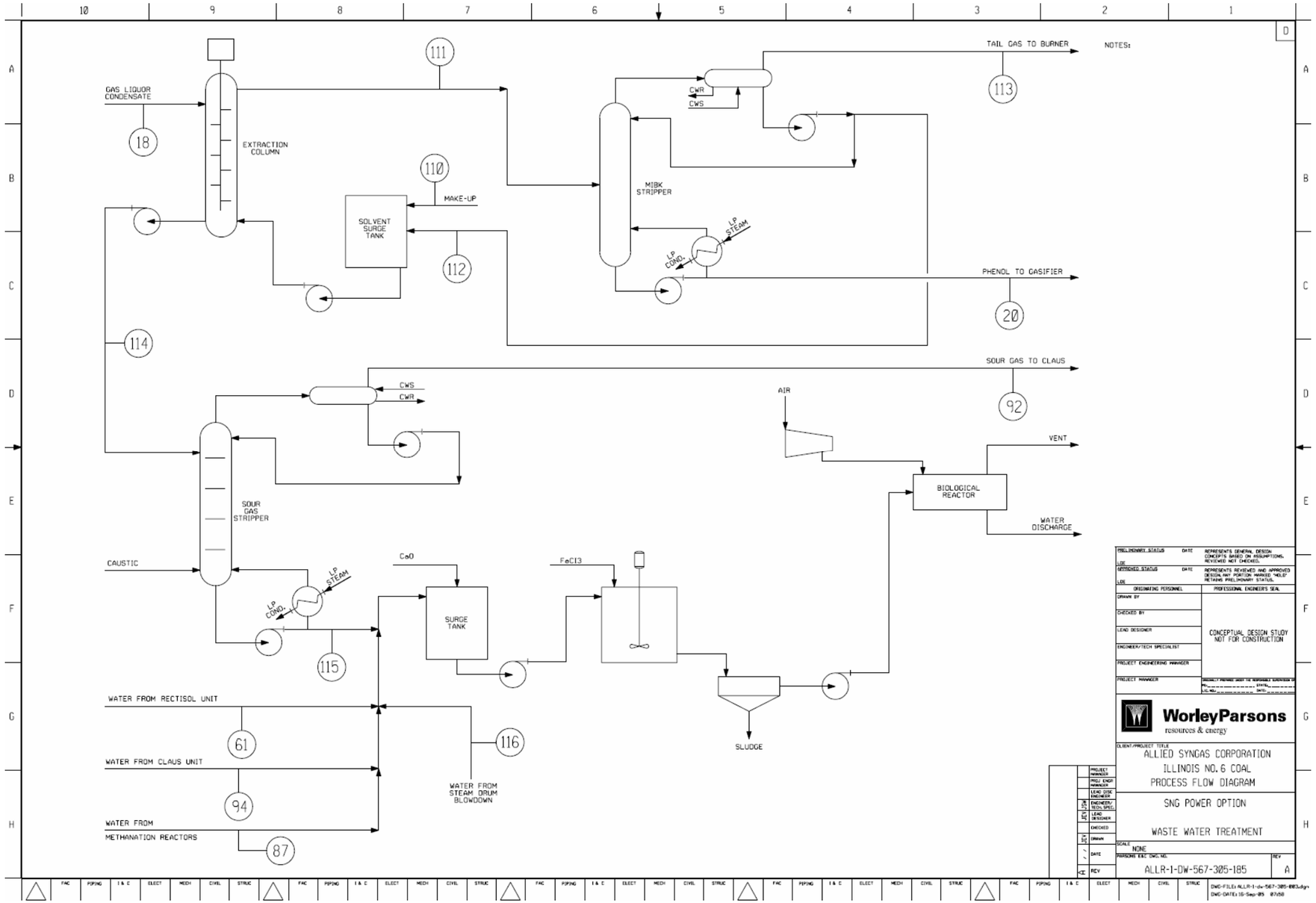

This page is intentionally left blank

Exhibit X.2-7 Steam Circuit Conceptual Process Flow Diagram

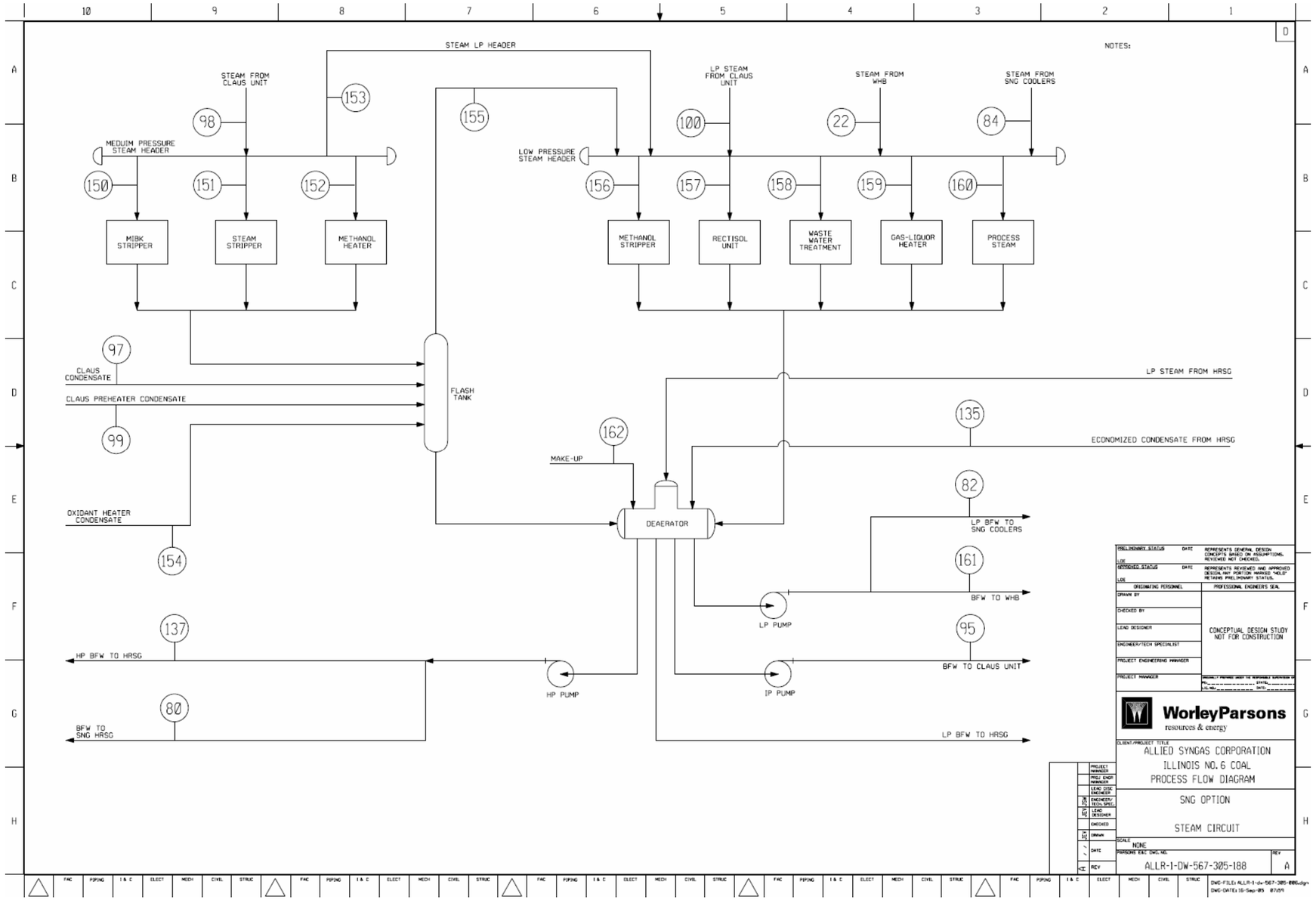

This page is intentionally left blank

Exhibit X.2-8 Water-Gas Shift Reaction System Conceptual Process Flow Diagram

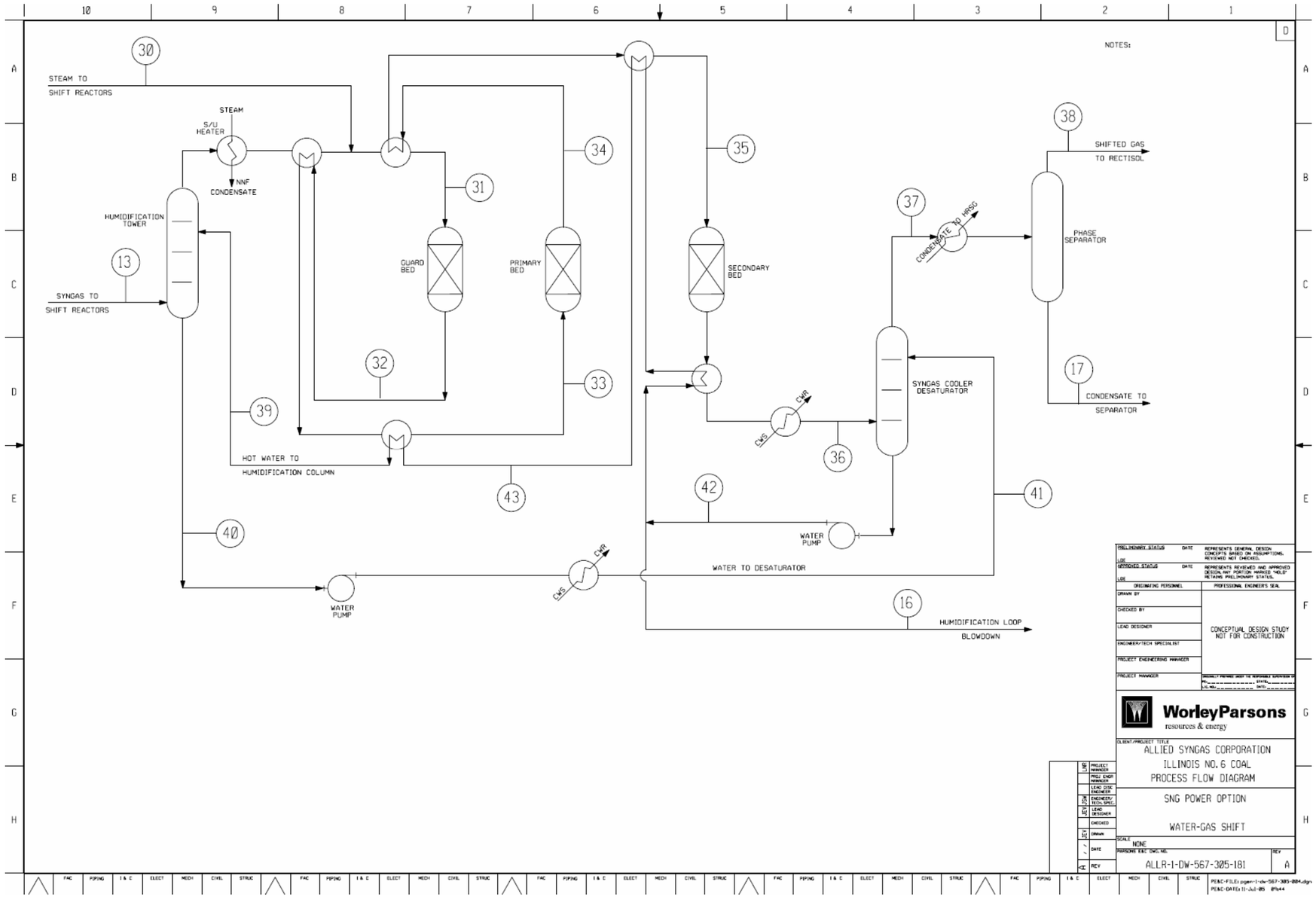

This page is intentionally left blank

Exhibit X.2-9 Methanation System Conceptual Process Flow Diagram

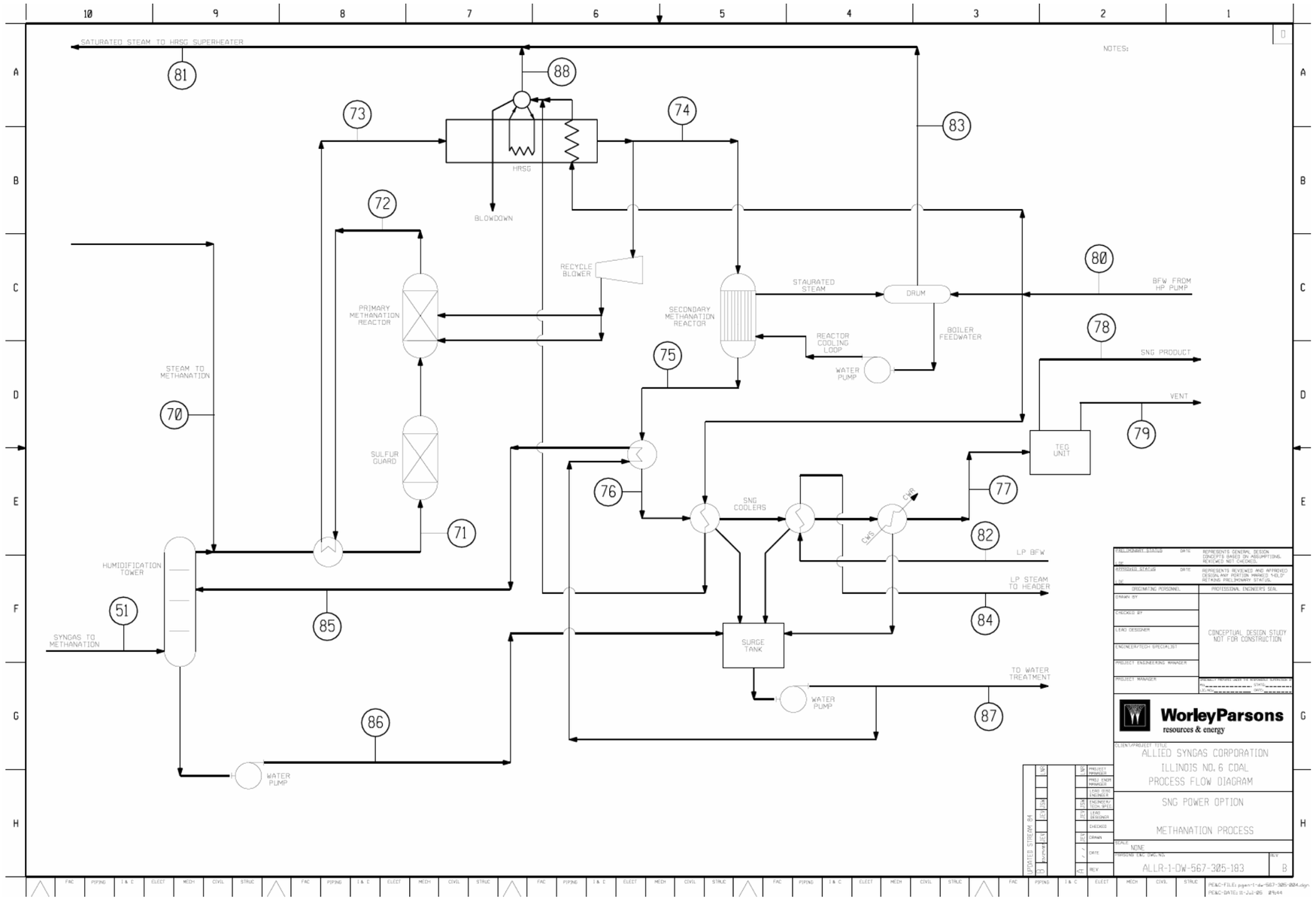

This page is intentionally left blank

Exhibit X.2-10 Combustion Turbine System Conceptual Process Flow Diagram

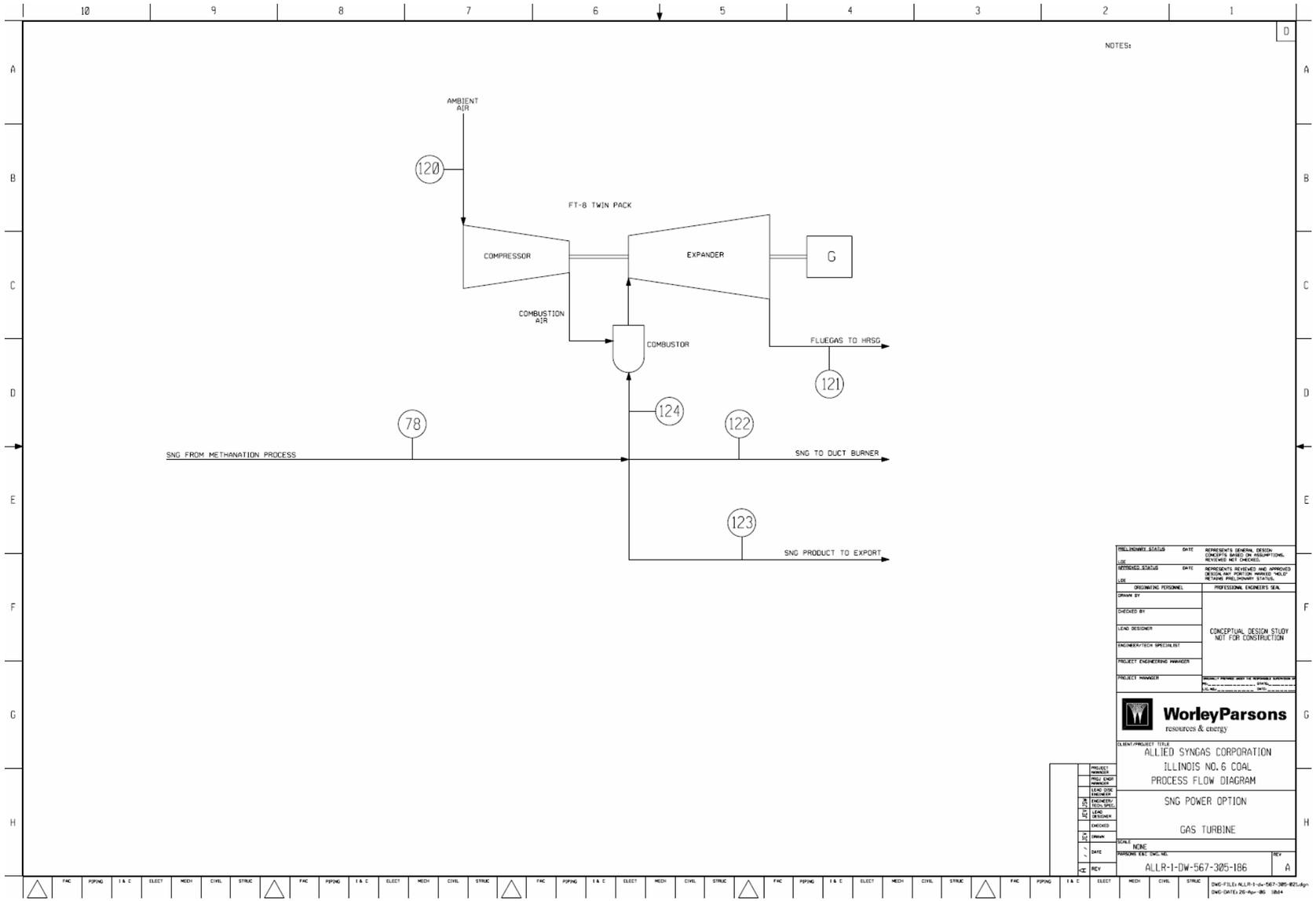

This page is intentionally left blank

Exhibit X.2-11 Steam Turbine and HRSG System Conceptual Process Flow Diagram

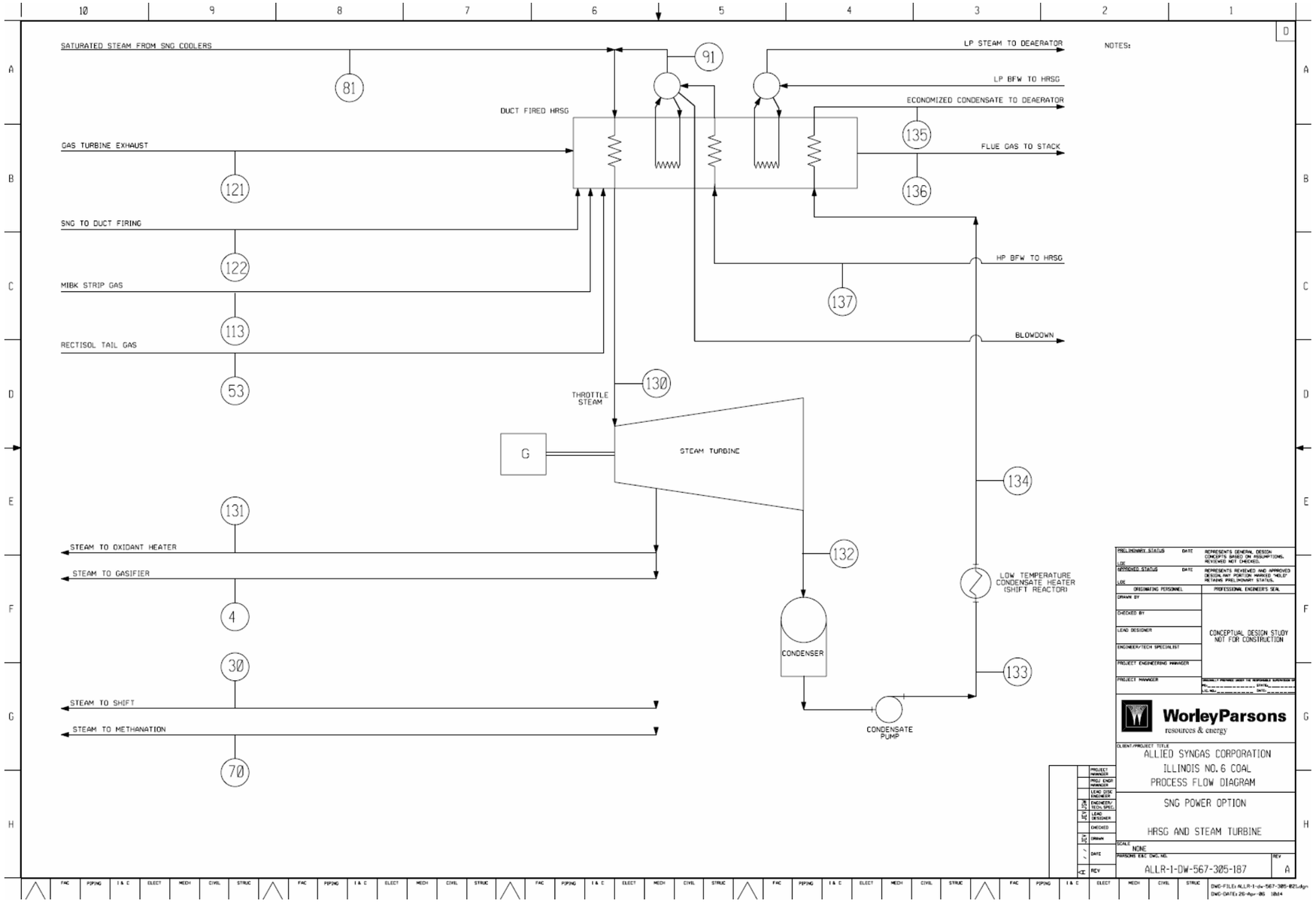

This page is intentionally left blank

Exhibit X.2-12 Gasification and Gas Cooling Systems Estimated State Point Compositions and Conditions

SNG to Power Option - Gasifier, Gas Cooling, and Gas Liquor Condensate Separation Material Balance (pg. 1 of 2)

STREAM	1		2		3		4		5		6		7		8		9		10		11	
Description	Coal to Gasifier		Flux to Gasifier		Syngas Purge		Steam to Gasifier		Oxygen to Gasifier		Burner Gas		Oxidant to Burner		Liquid Products Recycle		Slag		Crude Syngas to Gas Coolers		Crude Syngas	
Flow	lbmol/hr	lb/hr	lbmol/hr	lb/hr	lbmol/hr	lb/hr	lbmol/hr	lb/hr	lbmol/hr	lb/hr	lbmol/hr	lb/hr	lbmol/hr	lb/hr	lbmol/hr	lb/hr	lbmol/hr	lb/hr	lbmol/hr	lb/hr	lbmol/hr	lb/hr
AR	0.00	0.00	0.00	0.00	0.00	0.01	0.00	0.00	0.00	0.00	0.00	0.00	0.01	0.40	0.00	0.00	0.00	0.00	0.00	0.12	0.00	0.12
BTX	0.00	0.00	0.00	0.00	0.24	21.91	0.00	0.00	0.00	0.00	0.00	0.00	0.00	0.00	7.59	699.35	0.00	0.00	2.39	220.39	2.39	220.38
CH4	0.00	0.00	0.00	0.00	13.61	218.35	0.00	0.00	0.00	0.00	8.45	135.58	0.00	0.00	0.00	0.00	0.00	0.00	136.92	2196.61	136.91	2196.52
C2H4	0.00	0.00	0.00	0.00	0.11	3.04	0.00	0.00	0.00	0.00	0.02	0.60	0.00	0.00	0.00	0.00	0.00	0.00	1.09	30.59	1.09	30.59
C2H6	0.00	0.00	0.00	0.00	0.54	16.21	0.00	0.00	0.00	0.00	0.00	0.00	0.00	0.00	0.00	0.00	0.00	0.00	5.42	163.09	5.42	163.08
C3H6	0.00	0.00	0.00	0.00	0.04	1.84	0.00	0.00	0.00	0.00	0.02	0.90	0.00	0.00	0.00	0.00	0.00	0.00	0.44	18.49	0.44	18.49
C3H8	0.00	0.00	0.00	0.00	0.23	10.01	0.00	0.00	0.00	0.00	0.00	0.00	0.00	0.00	0.01	0.59	0.00	0.00	2.28	100.67	2.28	100.66
C4H8	0.00	0.00	0.00	0.00	0.03	1.85	0.00	0.00	0.00	0.00	0.00	0.00	0.00	0.00	0.02	1.09	0.00	0.00	0.33	18.59	0.33	18.59
C4H10	0.00	0.00	0.00	0.00	0.09	5.14	0.00	0.00	0.00	0.00	0.00	0.00	0.00	0.00	0.05	2.85	0.00	0.00	0.89	51.72	0.89	51.72
CH3OH	0.00	0.00	0.00	0.00	0.00	0.00	0.00	0.00	0.00	0.00	0.00	0.00	0.00	0.00	0.05	1.60	0.00	0.00	0.00	0.00	0.00	0.00
CO	0.00	0.00	0.00	0.00	124.92	3498.92	0.00	0.00	0.00	0.00	0.00	0.00	0.00	0.00	0.00	0.00	0.00	0.00	1256.65	35198.65	1256.64	35198.46
CO2	0.00	0.00	0.00	0.00	9.87	434.38	0.00	0.00	0.00	0.00	0.02	0.76	0.00	0.00	1.87	82.30	0.00	0.00	99.31	4370.63	99.29	4369.78
COS	0.00	0.00	0.00	0.00	0.14	8.53	0.00	0.00	0.00	0.00	0.00	0.00	0.00	0.00	0.00	0.00	0.00	0.00	1.43	85.91	1.43	85.86
HCN	0.00	0.00	0.00	0.00	0.07	1.79	0.00	0.00	0.00	0.00	0.00	0.00	0.00	0.00	0.00	0.00	0.00	0.00	0.67	17.99	0.67	17.98
HCL	0.00	0.00	0.00	0.00	0.00	0.00	0.00	0.00	0.00	0.00	0.00	0.00	0.00	0.00	0.00	0.00	0.00	0.00	0.00	0.00	0.00	0.00
H2	0.00	0.00	0.00	0.00	68.61	138.31	0.00	0.00	0.00	0.00	0.00	0.00	0.00	0.00	0.00	0.00	0.00	0.00	690.17	1391.38	690.16	1391.37
H2O	0.00	0.00	0.00	0.00	0.53	9.60	1618.51	29157.55	0.00	0.00	0.00	0.00	0.00	0.00	0.04	0.76	0.00	0.00	714.16	12865.61	95.81	1726.03
H2S	0.00	0.00	0.00	0.00	2.64	90.09	0.00	0.00	0.00	0.00	0.00	0.00	0.00	0.00	0.46	15.51	0.00	0.00	26.69	909.46	26.61	906.70
MIBK	0.00	0.00	0.00	0.00	0.00	0.00	0.00	0.00	0.00	0.00	0.00	0.00	0.00	0.00	0.00	0.00	0.00	0.00	0.00	0.00	0.00	0.00
N2	0.00	0.00	0.00	0.00	1.43	39.98	0.00	0.00	7.51	210.48	0.08	2.17	0.12	3.22	0.00	0.00	0.00	0.00	14.36	402.18	14.36	402.18
NH3	0.00	0.00	0.00	0.00	0.00	0.00	0.00	0.00	0.00	0.00	0.00	0.00	0.00	0.00	0.00	0.00	0.00	0.00	0.00	0.00	0.00	0.00
O2	0.00	0.00	0.00	0.00	0.00	0.00	0.00	0.00	1495.14	47841.33	0.00	0.00	22.80	729.55	0.00	0.00	0.00	0.00	0.00	0.00	0.00	0.00
PHENOL	0.00	0.00	0.00	0.00	0.00	0.00	0.00	0.00	0.00	0.00	0.00	0.00	0.00	0.00	1.70	159.99	0.00	0.00	0.00	0.00	0.00	0.00
SO2	0.00	0.00	0.00	0.00	0.00	0.00	0.00	0.00	0.00	0.00	0.00	0.00	0.00	0.00	0.00	0.00	0.00	0.00	0.00	0.00	0.00	0.00
Mass Flow, lb/hr																						
Coal	95,409		0		0		0		0		0		0		0		0		0		0	
Flux	0		2442		0		0		0		0		0		0		0		0		0	
Oil	0		0		0		0		0		0		0		2099		0		0		0	
Slag	0		0		0		0		0		0		0		0		13787		0		0	
Sulfur	0		0		0		0		0		0		0		0		0		0		0	
Tar	0		0		0		0		0		0		0		4902		0		0		0	
Total Flow lbmol/hr	n/a		n/a		223		1,619		1,503		9		23		n/a		n/a		2,953		2,335	
Total Flow lb/hr	95,409		2,442		4,500		29,158		48,053		140		733		7,965		13,787		58,043		46,899	
Total Flow cuft/hr	n/a		n/a		3,979		38,813		26,564		96		256		n/a		n/a		71,010		49,535	
Temperature F	60		60		95		680		392		60		60		100		n/a		311		208	
Pressure psi	n/a		n/a		333		510		517		500		500		500		n/a		340		338	
Vapor Frac	n/a		n/a		1		1		1		1		1		0		n/a		0.9997		1	
Liquid Frac	n/a		n/a		0		0		0		0		0		1		n/a		0.0003		0	
Enthalpy Btu/lb	n/a		n/a		-1,808		-5,491		71		-1,959		-4		n/a		n/a		-2,598		-1,904	
Density lb/cuft	n/a		n/a		1.1311		0.7512		1.8089		1.4616		2.8674		n/a		n/a		0.8174		0.9468	
Average MW	n/a		n/a		20.1710		18.0153		31.9789		16.3016		31.9823		n/a		n/a		19.6542		20.0876	

5/24/2006 0:00

This page is intentionally left blank

Exhibit X.2-12 Gasification and Gas Cooling Systems Estimated State Point Compositions and Conditions

SNG to Power Option - Gasifier, Gas Cooling, and Gas Liquor Condensate Separation Material Balance (pg. 2 of 2)

STREAM	12		13		14		15		16		17		18		19		20		21		22	
Description	Crude Syngas		Crude Syngas to Sour Shift		Syngas to Rectisol Unit		Expansion Gas to Claus Unit		Humidification Loop Blowdown		Condensate from Shift Reactors		Gas Liquor Condensate		BTX Recycle to Gasifier		Phenol Recycle to Gasifier		Quench Water		LP Steam to LP S Header	
Flow	lbmol/hr	lb/hr	lbmol/hr	lb/hr	lbmol/hr	lb/hr	lbmol/hr	lb/hr	lbmol/hr	lb/hr	lbmol/hr	lb/hr	lbmol/hr	lb/hr	lbmol/hr	lb/hr	lbmol/hr	lb/hr	lbmol/hr	lb/hr	lbmol/hr	lb/
AR	0.00	0.12	0.01	0.29	0.00	0.11	0.00	0.00	0.00	0.00	0.00	0.00	0.00	0.00	0.00	0.00	0.00	0.00	0.00	0.00	0.00	0.
BTX	2.39	220.38	5.85	539.41	2.15	198.48	0.00	0.00	0.00	0.14	0.00	0.00	0.00	0.26	7.60	700.62	0.00	0.00	0.00	0.00	0.00	0.
CH4	136.91	2196.52	335.11	5376.25	123.30	1978.17	0.02	0.35	0.02	0.27	0.00	0.02	0.03	0.44	0.00	0.01	0.00	0.00	0.00	0.00	0.00	0.
C2H4	1.09	30.59	2.67	74.88	0.98	27.55	0.00	0.02	0.00	0.01	0.00	0.00	0.00	0.00	0.00	0.01	0.00	0.00	0.00	0.00	0.00	0.
C2H6	5.42	163.08	13.27	399.15	4.88	146.87	0.00	0.08	0.00	0.03	0.00	0.00	0.00	0.00	0.00	0.07	0.00	0.00	0.00	0.00	0.00	0.
C3H6	0.44	18.49	1.08	45.26	0.40	16.65	0.00	0.01	0.00	0.00	0.00	0.00	0.00	0.00	0.00	0.13	0.00	0.00	0.00	0.00	0.00	0.
C3H8	2.28	100.66	5.59	246.38	2.06	90.66	0.00	0.02	0.00	0.01	0.00	0.00	0.00	0.00	0.01	0.62	0.00	0.00	0.00	0.00	0.00	0.
C4H8	0.33	18.59	0.81	45.50	0.30	16.74	0.00	0.00	0.00	0.00	0.00	0.00	0.00	0.00	0.02	1.11	0.00	0.00	0.00	0.00	0.00	0.
C4H10	0.89	51.72	2.18	126.57	0.80	46.57	0.00	0.01	0.00	0.00	0.00	0.00	0.00	0.00	0.05	2.85	0.00	0.00	0.00	0.00	0.00	0.
CH3OH	0.00	0.00	0.00	0.00	0.00	0.00	0.00	0.00	0.00	0.00	0.00	0.00	0.00	0.00	0.02	0.54	0.00	0.00	0.00	0.00	0.00	0.
CO	1256.64	35198.46	3075.67	86149.40	1131.72	31699.53	0.05	1.39	0.00	0.12	0.00	0.00	0.01	0.15	0.00	0.00	0.00	0.00	0.00	0.00	0.00	0.
CO2	99.29	4369.71	243.07	10697.21	89.42	3935.34	1.79	78.91	0.59	26.09	0.09	4.09	4.18	184.12	1.90	83.57	0.00	0.00	0.00	0.00	0.00	0.
COS	1.43	85.86	3.50	210.27	1.29	77.32	0.00	0.07	0.00	0.00	0.00	0.00	0.00	0.14	0.01	0.46	0.00	0.00	0.00	0.00	0.00	0.
HCN	0.67	17.97	1.63	44.03	0.60	16.19	0.00	0.02	0.00	0.02	0.00	0.01	0.00	0.07	0.00	0.05	0.00	0.00	0.00	0.00	0.00	0.
HCL	0.00	0.00	0.00	0.00	0.00	0.00	0.00	0.00	0.00	0.00	0.00	0.00	2.50	91.28	0.00	0.00	0.00	0.00	0.00	0.00	0.00	0.
H2	690.16	1391.37	1689.20	3405.44	621.56	1253.06	0.07	0.14	0.05	0.10	0.00	0.00	0.02	0.04	0.00	0.00	0.00	0.00	0.00	0.00	0.00	0.
H2O	12.58	226.62	1747.92	31488.83	4.83	86.93	0.43	7.67	1434.93	25850.23	987.34	17786.98	1296.00	23347.48	0.04	0.75	0.00	0.00	2961.85	53357.75	977.50	1760
H2S	26.60	906.37	65.31	2225.93	23.95	816.25	0.06	2.16	0.10	3.56	0.07	2.25	0.34	11.60	0.46	15.51	0.00	0.00	0.00	0.00	0.00	0.
MIBK	0.00	0.00	0.00	0.00	0.00	0.00	0.00	0.00	0.00	0.00	0.00	0.00	0.00	0.00	0.00	0.00	0.00	0.00	0.00	0.00	0.00	0.
N2	14.36	402.18	35.14	984.35	12.93	362.20	0.00	0.03	0.00	0.01	0.00	0.00	0.00	0.00	0.00	0.00	0.00	0.00	0.00	0.00	0.00	0.
NH3	0.00	0.00	0.00	0.00	0.00	0.00	0.00	0.00	0.00	0.00	0.00	0.00	3.86	65.71	0.00	0.00	0.00	0.00	0.00	0.00	0.00	0.
O2	0.00	0.00	0.00	0.00	0.00	0.00	0.00	0.00	0.00	0.00	0.00	0.00	0.00	0.00	0.00	0.00	0.00	0.00	0.00	0.00	0.00	0.
PHENOL	0.00	0.00	0.00	0.00	0.00	0.00	0.00	0.00	0.00	0.00	0.00	0.00	1.71	160.93	0.00	0.00	1.70	160.21	0.00	0.00	0.00	0.
SO2	0.00	0.00	0.00	0.00	0.00	0.00	0.00	0.00	0.00	0.00	0.00	0.00	0.00	0.00	0.00	0.00	0.00	0.00	0.00	0.00	0.00	0.
Mass Flow, lb/hr																						
Coal	0		0		0		0		0		0		0		0		0		0		0	
Flux	0		0		0		0		0		0		0		0		0		0		0	
Oil	0		0		0		0		0		0		0		0		0		0		0	
Slag	0		0		0		0		0		0		0		0		0		0		0	
Sulfur	0		0		0		0		0		0		0		0		0		0		0	
Tar	0		0		0		0		0		0		0		0		0		0		0	
Total Flow lbmol/hr	2,251		7,228		2,021		2		1,436		988		1,309		10		2		2,962		978	
Total Flow lb/hr	45,399		142,061		40,769		91		25,881		17,794		23,863		806		160		53,359		17,610	
Total Flow cuft/hr	42,076		173,798		36,044		50		496		290		419		14		3		924		102,418	
Temperature F	124		311		95		202		342.9661		95		223.3976		40		313.4319		200		308	
Pressure psi	335		340		333		293		375		293		293		20		15		500		75	
Vapor Frac	1		0.9996771		1		1		0		0		0		0		0		0		1	
Liquid Frac	0		0.000322923		0		0		1		1		1		1		1		1		0	
Enthalpy Btu/lb	-1,808		-2,598		-1,808		-3,905		-6,580		-6,845		-6,569		-393		-585		-6,754		-5,685	
Density lb/cuft	1.0790		0.8174		1.1311		1.8256		52.1896		61.4200		56.9280		55.7849		59.8494		57.7405		0.1719	
Average MW	20.1641		19.6542		20.1710		37.3851		18.0267		18.0188		18.2344		79.7150		94.1130		18.0153		18.0153	

5/24/2006 0:00

This page is intentionally left blank

Exhibit X.2-13 Rectisol System Estimated State Point Compositions and Conditions

SNG to Power Option - Rectisol Acid Gas Removal Material Balance (pg. 1 of 2)

STREAM	50		51		52		53		54		55		56	
Description	Rectisol Feed Gas		Sweet Syngas to Methanation		Sweet Syngas to Claus Unit		Rectisol Tail Gas		Tail Gas From Claus Unit		Acid Gas to Claus Plant		Sour Gas to Claus Plant	
Flow	lbmol/hr	lb/hr	lbmol/hr	lb/hr	lbmol/hr	lb/hr	lbmol/hr	lb/hr	lbmol/hr	lb/hr	lbmol/hr	lb/hr	lbmol/hr	lb/hr
AR	0.01	0.40	0.01	0.4	0.00	0.0	0.00	0.01	2.24	89.47	0.00	0.00	0.00	0.00
BTX	7.98	735.5	0.10	9.45	0.00	0.01	0.03	3.15	0.00	0.01	0.00	0.00	0.24	22.24
CH4	458.11	7,349	420.91	6,753	0.23	4	36.25	581.63	0.12	1.93	0.37	5.88	0.35	5.60
C2H4	3.65	102.3	1.96	54.91	0.00	0.0	1.67	46.80	0.00	0.01	0.00	0.00	0.02	0.57
C2H6	18.14	545.5	9.87	296.9	0.01	0.2	8.08	243.01	0.00	0.04	0.00	0.00	0.18	5.37
C3H6	1.47	61.85	0.20	8.27	0.00	0.00	1.21	50.85	0.00	0.00	0.00	0.00	0.06	2.59
C3H8	7.64	336.9	3.75	165.52	0.00	0.1	3.47	152.87	0.00	0.02	0.00	0.00	0.40	17.76
C4H8	1.11	62.21	0.01	0.5	0.00	0.00	0.88	49.58	0.00	0.00	0.00	0.00	0.20	11.02
C4H10	2.98	173.1	0.17	10.06	0.00	0.0	2.11	122.39	0.00	0.00	0.00	0.00	0.65	37.80
CH3OH	0.00	0.00	0.00	0.00	0.00	0.00	0.00	0.00	0.00	0.00	1.24	39.66	0.02	0.50
CO	1,558.39	43,650	1,522.90	42,656	0.82	23	33.93	950.46	2.70	75.6	0.34	9.6	0.40	11.19
CO2	2,973.88	130,877	86.85	3,822.2	0.05	2	2,607.34	114,746.6	290.69	12,793	202.29	8,903	75.44	3,320.14
COS	1.34	80.4	0.00	0.00	0.00	0.00	0.00	0.06	0.20	11.77	1.28	77.1	0.05	2.74
HCN	2.21	59.77	0.00	0.00	0.00	0.00	0.00	0.00	0.00	0.00	0.00	0.07	2.21	59.66
HCL	0.00	0.00	0.00	0.00	0.00	0.00	0.00	0.00	0.00	0.00	0.00	0.00	0.00	0.00
H2	4,958.76	9,997	4,941.17	9,961	2.66	5	14.83	29.90	1.81	3.66	0.04	0.09	0.05	0.10
H2O	26.66	480.27	0.00	0.00	0.00	0.00	0.00	0.00	28.75	518.0	0.00	0.1	0.02	0.39
H2S	90.73	3,092	0.00	0.00	0.00	0.00	0.04	1.51	3.14	107.1	88.82	3,027	1.41	48.09
MIBK	0.00	0.00	0.00	0.00	0.00	0.00	0.00	0.00	0.00	0.00	0.00	0.00	0.00	0.00
N2	48.06	1,346	47.35	1,326	0.03	1	0.67	18.79	177.87	4,983	0.00	0.06	0.01	0.31
NH3	0.00	0.00	0.00	0.00	0.00	0.00	0.00	0.00	0.00	0.00	0.00	0.00	0.00	0.00
O2	0.00	0.00	0.00	0.00	0.00	0.00	0.00	0.00	0.00	0.00	0.00	0.00	0.00	0.00
PHENOL	0.00	0.00	0.00	0.00	0.00	0.00	0.00	0.00	0.00	0.00	0.00	0.00	0.00	0.00
SO2	0.00	0.00	0.00	0.00	0.00	0.00	0.00	0.00	0.00	0.00	0.00	0.00	0.00	0.00
Total Flow lbmol/hr	10,161	7,751	7,035		4		2,711		508		294		82	
Total Flow lb/hr	198,953		65,065		35		117,000		18,584		12,063		3,546	
Total Flow cuft/hr	195,574		138,182		74		829,354		8,621		56,406		4,791	
Temperature F	95		80		80		80		120		93		-13	
Pressure psi	306		297		297		19		329		31		75	
Vapor Frac	1		1		1		1		1		1		1	
Liquid Frac	0		0		0		0		0		0		0	
Enthalpy Btu/lb	-2,994		-1,552		-1,552		-3,798		-2,840		-2,918		-3,622	
Density lb/cuft	1.0173		0.4709		0.4709		0.1411		2.1556		0.2139		0.7402	
Average MW	19.5799		9.2484		9.2484		43.1649		36.6157		40.9739		43.4009	

5/24/2006 0:00

This page is intentionally left blank

Exhibit X.2-13 Rectisol System Estimated State Point Compositions and Conditions

SNG to Power Option - Rectisol Acid Gas Removal Material Balance (pg. 2 of 2)

STREAM	57		58		59		60		61		62	
Description	Methanol Make-Up		Pre-Quench Bottoms		Methanol Stripper Feed		To Quench Wash		Water to Treatment		Water for Decanter	
Flow	lbmol/hr	lb/hr	lbmol/hr	lb/hr	lbmol/hr	lb/hr	lbmol/hr	lb/hr	lbmol/hr	lb/hr	lbmol/hr	lb/hr
AR	0.00	0.00	0.00	0.00	0.00	0.00	0.00	0.00	0.00	0.00	0.00	0.00
BTX	0.00	0.00	7.85	722.9	0.00	0.0	0.00	0.00	0.00	0.00	0.00	0.00
CH4	0.00	0.00	0.35	5.6	0.00	0.0	0.00	0.00	0.00	0.00	0.00	0.00
C2H4	0.00	0.00	0.02	0.6	0.00	0.0	0.00	0.00	0.00	0.00	0.00	0.00
C2H6	0.00	0.00	0.18	5.4	0.00	0.0	0.00	0.00	0.00	0.00	0.00	0.00
C3H6	0.00	0.00	0.06	2.7	0.00	0.0	0.00	0.00	0.00	0.00	0.00	0.00
C3H8	0.00	0.00	0.42	18.4	0.00	0.0	0.00	0.00	0.00	0.00	0.00	0.00
C4H8	0.00	0.00	0.22	12.1	0.00	0.0	0.00	0.00	0.00	0.00	0.00	0.00
C4H10	0.00	0.00	0.70	40.6	0.00	0.0	0.00	0.00	0.00	0.00	0.00	0.00
CH3OH	0.62	20.00	16.76	537.1	16.73	536.1	17.35	556.05	0.00	0.00	0.00	0.00
CO	0.00	0.00	0.40	11.2	0.00	0.0	0.00	0.00	0.00	0.00	0.00	0.00
CO2	0.00	0.00	77.34	3,403.7	0.00	0.0	0.00	0.00	0.00	0.00	0.00	0.00
COS	0.00	0.00	0.05	3.2	0.00	0.0	0.00	0.00	0.00	0.00	0.00	0.00
HCN	0.00	0.00	0.00	0.1	0.00	0.0	0.00	0.00	0.00	0.00	0.00	0.00
HCL	0.00	0.00	0.00	0.0	0.00	0.0	0.00	0.00	0.00	0.00	0.00	0.00
H2	0.00	0.00	0.05	0.1	0.00	0.0	0.00	0.00	0.00	0.00	0.00	0.00
H2O	0.00	0.00	26.66	480.2	41.59	749.3	1.20	21.64	40.39	727.66	15.00	270.23
H2S	0.00	0.00	1.87	63.6	0.00	0.0	0.00	0.00	0.00	0.00	0.00	0.00
MIBK	0.00	0.00	0.00	0.0	0.00	0.0	0.00	0.00	0.00	0.00	0.00	0.00
N2	0.00	0.00	0.01	0.3	0.00	0.0	0.00	0.00	0.00	0.00	0.00	0.00
NH3	0.00	0.00	0.00	0.0	0.00	0.0	0.00	0.00	0.00	0.00	0.00	0.00
O2	0.00	0.00	0.00	0.0	0.00	0.0	0.00	0.00	0.00	0.00	0.00	0.00
PHENOL	0.00	0.00	0.00	0.0	0.00	0.0	0.00	0.00	0.00	0.00	0.00	0.00
SO2	0.00	0.00	0.00	0.0	0.00	0.0	0.00	0.00	0.00	0.00	0.00	0.00
Total Flow lbmol/hr	1		133		58		19		40		15	
Total Flow lb/hr	20		5,308		1,285		578		728		270	
Total Flow cuft/hr	0		82		24		13		13		4	
Temperature F	140		-1		135		207		287		100	
Pressure psi	50		330		55		48		52		20	
Vapor Frac	0		0		0		0		0		0	
Liquid Frac	1		1		1		1		1		1	
Enthalpy Btu/lb	-3,195		-3,647		-5,308		-3,267		-6,654		-6,842	
Density lb/cuft	47.1089		64.7945		53.6425		44.3298		54.4748		61.2486	
Average MW	32.0422		39.9283		22.0390		31.1339		18.0153		18.0153	

5/24/2006

This page is intentionally left blank

Exhibit X.2-14 Sulfur Production (Claus) System Estimated State Point Compositions and Conditions

SNG to Power Option - Claus Unit Material Balance

STREAM	90		91		92		93		94		95		96		97		98		99		100	
Description	Oxygen to Claus Furnace		Air to Claus Furnace		Sour Gas From Stripper		Sulfur Product		Blowdown to Water Treatment		BFW		Claus Gas Out WHB		Condensate to MP Flash		MP Steam to Header		Condensate to Flash Tank		LP Steam to Header	
Flow	lbmol/hr	lb/hr	lbmol/hr	lb/hr	lbmol/hr	lb/hr	lbmol/hr	lb/hr	lbmol/hr	lb/hr	lbmol/hr	lb/hr	lbmol/hr	lb/hr	lbmol/hr	lb/hr	lbmol/hr	lb/hr	lbmol/hr	lb/hr	lbmol/hr	lb/hr
AR	0.00	0.00	2.24	89.48	0.00	0.00	0.00	0.00	0.00	0.00	0.00	0.00	2.24	89.48	0.00	0.00	0.00	0.00	0.00	0.00	0.00	0.00
BTX	0.00	0.00	0.00	0.00	0.00	0.00	0.00	0.00	0.00	0.00	0.00	0.00	0.00	0.00	0.00	0.00	0.00	0.00	0.00	0.00	0.00	0.00
CH4	0.00	0.00	0.00	0.00	0.00	0.00	0.00	0.00	0.00	0.00	0.00	0.00	0.21	3.44	0.00	0.00	0.00	0.00	0.00	0.00	0.00	0.00
C2H4	0.00	0.00	0.00	0.00	0.00	0.00	0.00	0.00	0.00	0.00	0.00	0.00	0.00	0.00	0.00	0.00	0.00	0.00	0.00	0.00	0.00	0.00
C2H6	0.00	0.00	0.00	0.00	0.00	0.00	0.00	0.00	0.00	0.00	0.00	0.00	0.00	0.00	0.00	0.00	0.00	0.00	0.00	0.00	0.00	0.00
C3H6	0.00	0.00	0.00	0.00	0.00	0.00	0.00	0.00	0.00	0.00	0.00	0.00	0.00	0.00	0.00	0.00	0.00	0.00	0.00	0.00	0.00	0.00
C3H8	0.00	0.00	0.00	0.00	0.00	0.00	0.00	0.00	0.00	0.00	0.00	0.00	0.00	0.00	0.00	0.00	0.00	0.00	0.00	0.00	0.00	0.00
C4H8	0.00	0.00	0.00	0.00	0.00	0.00	0.00	0.00	0.00	0.00	0.00	0.00	0.00	0.00	0.00	0.00	0.00	0.00	0.00	0.00	0.00	0.00
C4H10	0.00	0.00	0.00	0.00	0.00	0.00	0.00	0.00	0.00	0.00	0.00	0.00	0.00	0.00	0.00	0.00	0.00	0.00	0.00	0.00	0.00	0.00
CH3OH	0.00	0.00	0.00	0.00	0.00	0.00	0.00	0.00	0.00	0.00	0.00	0.00	0.00	0.00	0.00	0.00	0.00	0.00	0.00	0.00	0.00	0.00
CO	0.00	0.00	0.00	0.00	0.01	0.15	0.00	0.00	0.00	0.00	0.00	0.00	1.55	43.30	0.00	0.00	0.00	0.00	0.00	0.00	0.00	0.00
CO2	0.00	0.00	0.00	0.00	4.18	184.12	0.00	0.00	0.00	0.05	0.00	0.00	289.64	12746.76	0.00	0.00	0.00	0.00	0.00	0.00	0.00	0.00
COS	0.00	0.00	0.00	0.00	0.00	0.14	0.00	0.00	0.00	0.00	0.00	0.00	1.36	81.94	0.00	0.00	0.00	0.00	0.00	0.00	0.00	0.00
HCN	0.00	0.00	0.00	0.00	0.00	0.07	0.00	0.04	0.00	0.00	0.00	0.00	0.00	0.04	0.00	0.00	0.00	0.00	0.00	0.00	0.00	0.00
HCL	0.00	0.00	0.00	0.00	0.00	0.00	0.00	0.00	0.00	0.00	0.00	0.00	0.00	0.00	0.00	0.00	0.00	0.00	0.00	0.00	0.00	0.00
H2	0.00	0.00	0.00	0.00	0.02	0.04	0.00	0.00	0.00	0.00	0.00	0.00	1.77	3.57	0.00	0.00	0.00	0.00	0.00	0.00	0.00	0.00
H2O	0.00	0.00	0.00	0.00	9.99	179.94	0.00	0.00	86.03	1549.80	765.30	13786.90	91.65	1651.08	195.37	3519.50	156.05	2811.20	158.48	2855.06	255.40	4601.04
H2S	0.00	0.00	0.00	0.00	0.34	11.60	0.00	0.00	0.00	0.01	0.00	0.00	22.32	760.68	0.00	0.00	0.00	0.00	0.00	0.00	0.00	0.00
MIBK	0.00	0.00	0.00	0.00	0.00	0.00	0.00	0.00	0.00	0.00	0.00	0.00	0.00	0.00	0.00	0.00	0.00	0.00	0.00	0.00	0.00	0.00
N2	0.10	2.83	174.70	4894.18	0.00	0.00	0.00	0.00	0.00	0.00	0.00	0.00	177.85	4982.30	0.00	0.00	0.00	0.00	0.00	0.00	0.00	0.00
NH3	0.00	0.00	0.00	0.00	3.85	65.50	0.00	0.00	0.00	0.00	0.00	0.00	0.00	0.00	0.00	0.00	0.00	0.00	0.00	0.00	0.00	0.00
O2	10.01	320.30	47.04	1505.06	0.00	0.00	0.00	0.00	0.00	0.00	0.00	0.00	0.00	0.00	0.00	0.00	0.00	0.00	0.00	0.00	0.00	0.00
PHENOL	0.00	0.00	0.00	0.00	0.00	0.00	0.00	0.00	0.00	0.00	0.00	0.00	0.00	0.00	0.00	0.00	0.00	0.00	0.00	0.00	0.00	0.00
SO2	0.00	0.00	0.00	0.00	0.00	0.00	0.00	0.00	0.00	0.00	0.00	0.00	11.95	765.67	0.00	0.00	0.00	0.00	0.00	0.00	0.00	0.00
SO3	0.00	0.00	0.00	0.00	0.00	0.00	0.00	0.00	0.00	0.00	0.00	0.00	0.00	0.00	0.00	0.00	0.00	0.00	0.00	0.00	0.00	0.00
C	0.00	0.00	0.00	0.00	0.00	0.00	0.00	0.00	0.00	0.00	0.00	0.00	0.00	0.00	0.00	0.00	0.00	0.00	0.00	0.00	0.00	0.00
S	0.00	0.00	0.00	0.00	0.00	0.00	0.00	0.00	0.00	0.00	0.00	0.00	0.00	0.00	0.00	0.00	0.00	0.00	0.00	0.00	0.00	0.00
S2	0.00	0.00	0.00	0.00	0.00	0.00	0.00	0.00	0.00	0.00	0.00	0.00	0.13	8.14	0.00	0.00	0.00	0.00	0.00	0.00	0.00	0.00
S6	0.00	0.00	0.00	0.00	0.00	0.00	0.00	0.00	0.00	0.00	0.00	0.00	2.51	483.80	0.00	0.00	0.00	0.00	0.00	0.00	0.00	0.00
S8	0.00	0.00	0.00	0.00	0.00	0.00	11.11	2849.50	0.00	0.03	0.00	0.00	5.18	1327.65	0.00	0.00	0.00	0.00	0.00	0.00	0.00	0.00
Total Flow lbmol/hr	10		224		18		11		86		765		608		195		156		158		255	
Total Flow lb/hr	323		6,489		442		2,850		1,550		13,787		22,948		3,520		2,811		2,855		4,601	
Total Flow cuft/hr	1,985		84,916		2,592		9		25		233		256,781		69		1,945		58		26,680	
Temperature F	90		60		210		312		112		242		650		459		497		494		308	
Pressure psi	30		15		35		25		21		841		28		655		665		645		75	
Vapor Frac	1.0		1.0		0.7		0.0		0.0		0.0		1.0		0.0		1.0		0.0		1	
Liquid Frac	0.0		0.0		0.3		1.0		1.0		1.0		0.0		1.0		0.0		1.0		0	
Enthalpy Btu/lb	3		-4		-4,316		53		-6,829		-6,655		-2,477		-6,425		-5,664		-6,386		-5,687	
Density lb/cuft	0.1628		0.0764		0.1703		315.3572		60.8502		59.2168		0.0894		51.0967		1.4454		49.2567		0.1725	
Average MW	31.9590		28.9697		24.0151		256.4937		18.0160		18.0153		37.7211		18.0153		18.0153		18.0153		18.0153	

5/24/2006

This page is intentionally left blank

Exhibit X.2-15 Waste Water Treatment System Estimated State Point Compositions and Conditions

SNG to Power Option - Waste Water Treatment Material Balance

STREAM	110		111		112		113		114		115		116	
Description	MIBK Make Up		To MIBK Stripper		Regenerated Solvent		Tail Gas to Fired Burner		To Sour Gas Stripper		Water to Surge Tank		Steam Drum Blowdown	
Flow	lbmol/hr	lb/hr	lbmol/hr	lb/hr	lbmol/hr	lb/hr	lbmol/hr	lb/hr	lbmol/hr	lb/hr	lbmol/hr	lb/hr	lbmol/hr	lb/hr
AR	0	0	0	0	0	0	0	0	0	0	0	0	0	0
BTX	0.00	0.00	0.00	0.26	0.00	0.00	0.0000	0.0017	0.00	0.00	0	0	0	0
CH4	0.00	0.00	0.03	0.44	0.00	0.00	0.0206	0.3297	0.00	0.00	0	0	0	0
C2H4	0	0	0	0	0	0	0	0	0	0	0	0	0	0
C2H6	0	0	0	0	0	0	0	0	0	0	0	0	0	0
C3H6	0	0	0	0	0	0	0	0	0	0	0	0	0	0
C3H8	0	0	0	0	0	0	0	0	0	0	0	0	0	0
C4H8	0	0	0	0	0	0	0	0	0	0	0	0	0	0
C4H10	0	0	0	0	0	0	0	0	0	0	0	0	0	0
CH3OH	0	0	0	0	0	0	0	0	0	0	0	0	0	0
CO	0	0	0	0	0	0	0	0	0.01	0.15	0.00	0.00	0	0
CO2	0	0	0	0	0	0	0	0	4.18	184.1	0.00	0.0	0	0
COS	0	0	0	0	0	0	0	0	0.00	0.14	0.00	0.00	0	0
HCN	0	0	0	0	0	0	0	0	0.00	0.07	0.00	0.00	0	0
HCL	0	0	0	0	0	0	0	0	2.50	91.28	$2.50	$91.28	0.00	0.00
H2	0	0	0	0	0	0	0	0	0.02	0.04	0.00	0.00	0	0
H2O	0.00	0.00	0.51	9.19	0.00	0.00	0.0335	0.6044	1,295.49	23,338	1,285.50	23,158.4	189.94	3,422
H2S	0	0	0	0	0	0	0	0	0.34	11.60	0.00	0.00	0	0
MIBK	0.00	0.50	11.92	1,194.00	11.92	1,194	0.07	6.72	0.00	0.00	0.00	0.00	0	0
N2	0	0	0	0	0	0	0	0	0	0	0	0	0	0
NH3	0.00	0.00	0.01	0.09	0.00	0.00	0	0	3.85	65.6	0.01	0.1	0.00	0.00
O2	0	0	0	0	0	0	0	0	0	0	0	0	0	0
PHENOL	0.00	0.00	1.71	160.9	0.00	0.00	0	0	0.00	0.00	0.00	0.00	0	0
SO2	0	0	0	0	0	0	0	0	0	0	0	0	0	0
Total Flow lbmol/hr	0.00		14.18		11.92		0.12		1,306.40		1,288.02		189.94	
Total Flow lb/hr	0.50		1,364.91		1,194.00		7.76		23,691.69		23,250.12		3,421.73	
Total Flow cuft/hr	0.01		25.78		23.95		58.25		3,017.33		1,830.47		22,565.93	
Temperature F	100		15		65		210		67		246		394	
Pressure psi	25.0		15.0		25.0		14.9		15.0		38.0		75.0	
Vapor Frac	0		0		0		1		0		0		1	
Liquid Frac	1		1		1		0		1		1		0	
Enthalpy Btu/lb	-1,388		-1,375		-1,404		-1,557		-6,815		-6,656		-5,638	
Density lb/cuft	48.7603		52.9463		49.8557		0.1332		7.8519		12.7017		0.1516	
Average MW	100.1607		96.2804		100.1607		62.8352		18.1351		18.0511		18.0153	

5/24/2006

This page is intentionally left blank

Exhibit X.2-16 Steam Circuit Estimated State Point Compositions and Conditions

SNG to Power Option - Steam Circuit Material Balance (pg. 1 of 2)

STREAM	150	151	152	153	154	155	156
Description	MIBK Stripper Steam	Steam to Stripper	Steam to MeOH Heater	MP Steam Bypass	Oxidant Heater Condensate	Flash Tank Overheads	Steam to MeOH Stripper
Mass Flow lb/hr							
H2O	491	839	120	1,304	3,797	2,170	2,655
Total Flow lbmol/hr	27	47	7	72	211	120	147
Total Flow lb/hr	491	839	120	1,304	3,797	2,170	2,655
Total Flow cuft/hr	909	1,553	222	2,414	75	12,622	15,452
Temperature F	403	403	403	403	465	308	308
Pressure psi	250	250	250	250	490	75	75
Vapor Frac	1	1	1	1	0	1	1
Liquid Frac	0	0	0	0	1	0	0
Enthalpy Btu/lb	-5,664	-5,664	-5,664	-5,664	-6,419	-5,685	-5,684
Density lb/cuft	0.5404	0.5404	0.5404	0.5404	50.7432	0.1719	0.1718
Average MW	18.0153	18.0153	18.0153	18.0153	18.0153	18.0153	18.0153

5/24/2006

This page is intentionally left blank

Exhibit X.2-16 Steam Circuit Estimated State Point Compositions and Conditions

SNG to Power Option - Steam Circuit Material Balance (pg. 2 of 2)

STREAM	157	158	159	160	161	162
Description	Steam to Rectisol Unit	Steam to WWT	Steam to Condensate Heater	Process Steam	LP BFW to WHB	Make-Up Water
Mass Flow lb/hr						
H2O	14,797	3,305	3,200	61,499	17,996	135,898
Total Flow lbmol/hr	821	183	178	3,414	999	7,543
Total Flow lb/hr	14,797	3,305	3,200	61,499	17,996	135,898
Total Flow cuft/hr	86,121	19,236	18,624	357,934	305	2,179
Temperature F	308	308	308	308	240	60
Pressure psi	75	75	75	75	25	50
Vapor Frac	1	1	1	1	0	0
Liquid Frac	0	0	0	0	1	1
Enthalpy Btu/lb	-5,684	-5,684	-5,684	-5,684	-6,658	-6,838
Density lb/cuft	0.1718	0.1718	0.1718	0.1718	59.0795	62.3811
Average MW	18.0153	18.0153	18.0153	18.0153	18.0153	18.0153

5/24/2006

This page is intentionally left blank

Exhibit X.2-17 Water-Gas Shift Reaction System Estimated State Point Compositions and Conditions

SNG to Power Option - Water-Gas Shift Material Balance (pg. 1 of 2)

STREAM	30		31		32		33		34		35		36	
Description	Steam to Shift Reactors		Syngas to Guard Bed		Guard Bed Effluent		Primary Bed Feed		Primary Bed Effluent		Secondary Bed Feed		Shifted Gas to Desaturator	
Flow	lbmol/hr	lb/hr	lbmol/hr	lb/hr	lbmol/hr	lb/hr	lbmol/hr	lb/hr	lbmol/hr	lb/hr	lbmol/hr	lb/hr	lbmol/hr	lb/hr
AR	0.00	0.00	0.01	0.3	0.01	0.3	0.01	0.29	0.01	0.29	0.01	0.29	0.01	0.29
BTX	0.00	0.0	5.82	536.67	5.82	536.67	5.82	536.67	5.82	536.67	5.82	536.67	5.82	536.67
CH4	0.00	0	334.71	5,370	334.71	5,370	334.71	5,369.75	334.71	5,369.75	334.71	5,369.75	334.71	5,369.75
C2H4	0.00	0.0	2.66	74.73	2.66	74.7	2.66	74.73	2.66	74.73	2.66	74.73	2.66	74.73
C2H6	0.00	0.0	13.25	398.4	13.25	398.4	13.25	398.44	13.25	398.44	13.25	398.44	13.25	398.44
C3H6	0.00	0.00	1.07	45.19	1.07	45.19	1.07	45.19	1.07	45.19	1.07	45.19	1.07	45.19
C3H8	0.00	0.0	5.58	246.17	5.58	246.2	5.58	246.17	5.58	246.17	5.58	246.17	5.58	246.17
C4H8	0.00	0.00	0.81	45.5	0.81	45.47	0.81	45.47	0.81	45.47	0.81	45.47	0.81	45.47
C4H10	0.00	0.0	2.18	126.53	2.18	126.5	2.18	126.53	2.18	126.53	2.18	126.53	2.18	126.53
CH3OH	0.00	0.00	0.00	0.00	0.00	0.00	0.00	0.00	0.00	0.00	0.00	0.00	0.00	0.00
CO	0.00	0	3,075.00	86,131	2,675.00	74,927	2,675.00	74,926.64	1,323.52	37,071.7	1,323.52	37,071.7	426.07	11,934.20
CO2	0.00	0	241.68	10,635.9	641.68	28,240	641.68	28,239.5	1,996.61	87,869	1,996.61	87,869	2,894.06	127,364.69
COS	0.00	0.0	3.45	207.34	3.45	207.34	3.45	207.34	0.00	0.15	0.00	0.2	0.00	0.15
HCN	0.00	0.00	1.60	43.35	1.60	43.35	1.60	43.35	1.60	43.35	1.60	43.35	1.60	43.35
HCL	0.00	0.00	0.00	0.00	0.00	0.00	0.00	0.00	0.00	0.00	0.00	0.00	0.00	0.00
H2	0.00	0	1,688.76	3,405	2,088.76	4,211	2,088.76	4,210.93	3,440.24	6,935.52	3,440.24	6,935.52	4,337.69	8,744.77
H2O	3,331.51	60,017.08	8,455.86	152,332.23	8,055.86	145,126.23	8,055.86	145,126.23	6,700.92	120,717.1	6,700.92	120,717.1	5,803.48	104,549.62
H2S	0.00	0	62.00	2,112.97	62.00	2,112.97	62.00	2,112.97	65.45	2,230.5	65.45	2,231	65.45	2,230.51
MIBK	0.00	0.00	0.00	0.00	0.00	0.00	0.00	0.00	0.00	0.00	0.00	0.00	0.00	0.00
N2	0.00	0	35.13	984	35.13	984	35.13	984.08	35.13	984	35.13	984.08	35.13	984.08
NH3	0.00	0.00	0.00	0.00	0.00	0.00	0.00	0.00	0.00	0.00	0.00	0.00	0.00	0.00
O2	0.00	0.00	0.00	0.00	0.00	0.00	0.00	0.00	0.00	0.00	0.00	0.00	0.00	0.00
PHENOL	0.00	0.00	0.00	0.00	0.00	0.00	0.00	0.00	0.00	0.00	0.00	0.00	0.00	0.00
SO2	0.00	0.00	0.00	0.00	0.00	0.00	0.00	0.00	0.00	0.00	0.00	0.00	0.00	0.00
Total Flow lbmol/hr	3,332	7,751	13,930		13,930		13,930		13,930		13,930		13,930	
Total Flow lb/hr	60,018		262,698		262,698		262,698		262,698		262,698		262,698	
Total Flow cuft/hr	74,530		526,617		556,913		484,089		581,049		469,094		407,517	
Temperature F	680		700		740		575		763		510		350	
Pressure psi	510		325		322		320		315		309		297	
Vapor Frac	1		1		1		1		1		1		1	
Liquid Frac	0		0		0		0		0		0		0	
Enthalpy Btu/lb	-5,519		-3,845		-3,845		-3,919		-3,919		-4,035		-4,165	
Density lb/cuft	0.8053		0.4988		0.4717		0.5427		0.4521		0.5600		0.6446	
Average MW	18.0153		18.8590		18.8590		18.8590		18.8590		18.8590		18.8590	

5/24/2006 0:00

This page is intentionally left blank

Exhibit X.2-17 Water-Gas Shift Reaction System Estimated State Point Compositions and Conditions

SNG to Power Option - Water-Gas Shift Material Balance (pg. 2 of 2)

STREAM	37		38		39		40		41		42		43	
Description	Shifted Gas to Knock Out Drum		Shifted Gas to Rectisol Unit		Hot Water to Humidification Tower		Water Out Humidification Tower		Cold Water to Desaturator		Desaturator Water Effluent		Warm Loop Water to Heater	
Flow	lbmol/hr	lb/hr	lbmol/hr	lb/hr	lbmol/hr	lb/hr	lbmol/hr	lb/hr	lbmol/hr	lb/hr	lbmol/hr	lb/hr	lbmol/hr	lb/hr
AR	0.01	0.29	0.01	0.29	0.00	0.00	0.00	0.00	0.00	0.00	0.00	0.00	0.00	0.00
BTX	5.83	536.88	5.83	536.9	0.00	0.0	0.03	2.75	0.03	2.75	0.03	2.53	0.03	2.39
CH4	334.80	5,371.23	334.80	5,371.2	0.00	0.0	0.40	6.49	0.40	6.49	0.31	5.01	0.30	4.74
C2H4	2.67	74.76	2.67	74.8	0.00	0.0	0.01	0.15	0.01	0.15	0.00	0.11	0.00	0.11
C2H6	13.26	398.59	13.26	398.6	0.00	0.0	0.02	0.72	0.02	0.72	0.02	0.56	0.02	0.53
C3H6	1.07	45.20	1.07	45.2	0.00	0.0	0.00	0.07	0.00	0.07	0.00	0.06	0.00	0.06
C3H8	5.58	246.19	5.58	246.2	0.00	0.0	0.00	0.21	0.00	0.21	0.00	0.19	0.00	0.18
C4H8	0.81	45.47	0.81	45.5	0.00	0.0	0.00	0.03	0.00	0.03	0.00	0.03	0.00	0.03
C4H10	2.18	126.53	2.18	126.5	0.00	0.0	0.00	0.05	0.00	0.05	0.00	0.05	0.00	0.05
CH3OH	0.00	0.00	0.00	0.0	0.00	0.0	0.00	0.00	0.00	0.00	0.00	0.00	0.00	0.00
CO	426.66	11,950.77	426.66	11,950.8	0.00	0.0	0.67	18.76	0.67	18.76	0.08	2.19	0.07	2.08
CO2	2,884.55	126,946.03	2,884.45	126,941.9	0.00	0.0	1.39	61.29	1.39	61.29	10.91	479.96	10.31	453.87
COS	0.05	3.08	0.05	3.1	0.00	0.0	0.05	2.93	0.05	2.93	0.00	0.00	0.00	0.00
HCN	1.61	43.59	1.61	43.6	0.00	0.0	0.03	0.68	0.03	0.68	0.02	0.43	0.02	0.41
HCL	0.00	0.00	0.00	0.0	0.00	0.0	0.00	0.00	0.00	0.00	0.00	0.00	0.00	0.00
H2	4,337.21	8,743.81	4,337.20	8,743.8	0.00	0.0	0.45	0.90	0.45	0.90	0.93	1.87	0.88	1.77
H2O	1,009.18	18,180.32	21.83	393.3	24,978.80	449,993.1	21,602.37	389,166.70	21,602.37	389,166.70	26,396.67	475,536.01	24,961.74	449,685.75
H2S	66.84	2,278.03	66.78	2,275.8	0.00	0.0	3.31	112.96	3.31	112.96	1.92	65.45	1.82	61.89
MIBK	0.00	0.00	0.00	0.0	0.00	0.0	0.00	0.00	0.00	0.00	0.00	0.00	0.00	0.00
N2	35.13	984.13	35.13	984.1	0.00	0.0	0.01	0.26	0.01	0.26	0.01	0.22	0.01	0.21
NH3	0.00	0.00	0.00	0.0	0.00	0.0	0.00	0.00	0.00	0.00	0.00	0.00	0.00	0.00
O2	0.00	0.00	0.00	0.0	0.00	0.0	0.00	0.00	0.00	0.00	0.00	0.00	0.00	0.00
PHENOL	0.00	0.00	0.00	0.0	0.00	0.0	0.00	0.00	0.00	0.00	0.00	0.00	0.00	0.00
SO2	0.00	0.00	0.00	0.0	0.00	0.0	0.00	0.00	0.00	0.00	0.00	0.00	0.00	0.00
Total Flow lbmol/hr	9,127		8,140		24,979		21,609		21,609		26,411		24,975	
Total Flow lb/hr	175,977		158,184		450,000		389,381		389,381		476,102		450,221	
Total Flow cuft/hr	236,672		163,328		9,218		7,282		6,568		9,123		9,441	
Temperature F	255		95		420		312		150		343		414	
Pressure psi	295		293		340		340		350		375		355	
Vapor Frac	1		1		0		0		0		0		0	
Liquid Frac	0		0		1		1		1		1		1	
Enthalpy Btu/lb	-3,481		-3,299		-6,487		-6,620		-6,810		-6,580		-6,490	
Density lb/cuft	0.7435		0.9685		48.8175		53.4706		59.2843		52.1896		47.6886	
Average MW	19.2800		19.4331		18.0153		18.0196		18.0196		18.0267		18.0267	

5/24/2006 0:00

This page is intentionally left blank

Exhibit X.2-18 Methanation System Estimated State Point Compositions and Conditions

SNG to Power Option - Methanation Process Material Balance (pg. 1 of 2)

STREAM	70		71		72		73		74		75		76		77		78	
Description	Steam To Methanator		Syngas to Sulfur Guard		Primary Methanator Effluent		Syngas to HRSG		Secondary Methanator Influent		Secondary Methanator Effluent		Crude SNG to Gas Coolers		SNG to TEG Unit		SNG Product	
Flow	lbmol/hr	lb/hr	lbmol/hr	lb/hr	lbmol/hr	lb/hr	lbmol/hr	lb/hr	lbmol/hr	lb/hr	lbmol/hr	lb/hr	lbmol/hr	lb/hr	lbmol/hr	lb/hr	lbmol/hr	lb/hr
AR	0.00	0.00	0.01	0.4	0.03	1.1	0.03	1.11	0.01	0.39	0.01	0.39	0.01	0.39	0.01	0.39	0.01	0.39
BTX	0.00	0.0	0.10	9.45	0.29	27.01	0.29	27.01	0.10	9.45	0.10	9.45	0.10	9.45	0.10	9.44	0.10	9.44
CH4	0.00	0	420.91	6,753	3,873.80	62,147	3,873.80	62,147.37	1,355.83	21,751.58	2,028.80	32,547.97	2,028.80	32,547.97	2,027.68	32,530.10	2,027.68	32,530.10
C2H4	0.00	0.0	1.96	54.91	5.59	156.9	5.59	156.88	1.96	54.91	1.96	54.91	1.96	54.91	1.96	54.86	1.96	54.86
C2H6	0.00	0.0	9.87	296.9	28.21	848.2	28.21	848.16	9.87	296.86	9.87	296.86	9.87	296.86	9.87	296.65	9.87	296.65
C3H6	0.00	0.00	0.20	8.27	0.56	23.64	0.56	23.64	0.20	8.27	0.20	8.27	0.20	8.27	0.20	8.27	0.20	8.27
C3H8	0.00	0.0	3.75	165.52	10.72	472.9	10.72	472.90	3.75	165.52	3.75	165.52	3.75	165.52	3.75	165.48	3.75	165.48
C4H8	0.00	0.00	0.01	0.5	0.03	1.43	0.03	1.43	0.01	0.50	0.01	0.50	0.01	0.50	0.01	0.50	0.01	0.50
C4H10	0.00	0.0	0.17	10.06	0.49	28.7	0.49	28.75	0.17	10.06	0.17	10.06	0.17	10.06	0.17	10.06	0.17	10.06
CH3OH	0.00	0.00	0.00	0.00	0.00	0.00	0.00	0.00	0.00	0.00	0.00	0.00	0.00	0.00	0.00	0.00	0.00	0.00
CO	0.00	0	1,522.89	42,656	1,679.93	47,055	1,679.93	47,054.87	587.98	16,469.2	0.98	27.6	0.98	27.56	0.98	27.56	0.98	27.56
CO2	0.00	0	86.84	3,821.8	248.12	10,919	248.12	10,919.5	86.84	3,822	0.87	38	0.87	38.22	0.87	38.14	0.87	38.14
COS	0.00	0.0	0.00	0.00	0.00	0.00	0.00	0.00	0.00	0.00	0.00	0.0	0.00	0.00	0.00	0.00	0.00	0.00
HCN	0.00	0.00	0.00	0.00	0.00	0.00	0.00	0.00	0.00	0.00	0.00	0.00	0.00	0.00	0.00	0.00	0.00	0.00
HCL	0.00	0.00	0.00	0.00	0.00	0.00	0.00	0.00	0.00	0.00	0.00	0.00	0.00	0.00	0.00	0.00	0.00	0.00
H2	0.00	0	4,941.17	9,961	6,104.05	12,306	6,104.05	12,305.76	2,136.42	4,307.02	31.55	63.60	31.55	63.60	31.54	63.59	31.54	63.59
H2O	2,403.52	43,299.32	4,594.54	82,770.57	15,798.43	284,608.72	15,798.43	284,608.72	5,529.45	99,613.0	6,288.39	113,285.3	6,288.39	113,285.33	13.83	249.20	0.00	0.00
H2S	0.00	0	0.00	0.00	0.00	0.00	0.00	0.00	0.00	0.0	0.00	0	0.00	0.00	0.00	0.00	0.00	0.00
MIBK	0.00	0.00	0.00	0.00	0.00	0.00	0.00	0.00	0.00	0.00	0.00	0.00	0.00	0.00	0.00	0.00	0.00	0.00
N2	0.00	0	47.35	1,326	135.28	3,790	135.28	3,789.87	47.35	1,326	47.35	1,326.46	47.35	1,326.46	47.34	1,326.31	47.34	1,326.31
NH3	0.00	0.00	0.00	0.00	0.00	0.00	0.00	0.00	0.00	0.00	0.00	0.00	0.00	0.00	0.00	0.00	0.00	0.00
O2	0.00	0.00	0.00	0.00	0.00	0.00	0.00	0.00	0.00	0.00	0.00	0.00	0.00	0.00	0.00	0.00	0.00	0.00
PHENOL	0.00	0.00	0.00	0.00	0.00	0.00	0.00	0.00	0.00	0.00	0.00	0.00	0.00	0.00	0.00	0.00	0.00	0.00
SO2	0.00	0.00	0.00	0.00	0.00	0.00	0.00	0.00	0.00	0.00	0.00	0.00	0.00	0.00	0.00	0.00	0.00	0.00
Total Flow lbmol/hr	2,404		11,630		27,886		27,886		9,760		8,414		8,414		2,138		2,124	
Total Flow lb/hr	43,300		147,836		422,390		422,390		147,836		147,836		147,836		34,780		34,531	
Total Flow cuft/hr	53,770		420,775		1,319,340		1,276,520		319,884		321,744		196,034		48,063		47,794	
Temperature F	680		530		813		761		410		550		371		120		120	
Pressure psi	510		292		287		284		277		274		272		269		269	
Vapor Frac	1		1		1		1		1		1		1		1		1	
Liquid Frac	0		0		0		0		0		0		0		0		0	
Enthalpy Btu/lb	-5,519		-3,647		-4,068		-4,100		-4,308		-4,644		-4,969		-1,914		-1,886	
Density lb/cuft	0.8053		0.3513		0.3202		0.3309		0.4622		0.4595		0.7541		0.7236		0.7225	
Average MW	18.0153		12.7119		15.1473		15.1473		15.1473		17.5703		17.5703		16.2651		16.2537	

5/24/2006 0:00

This page is intentionally left blank

Exhibit X.2-18 (cont'd) Methanation System Estimated State Point Compositions and Conditions

SNG to Power Option - Methanation Process Material Balance (pg. 2 of 2)

STREAM	79		80		81		82		83		84		85		86		87		88	
Description	TEG Vent		HP BFW From Pump		Saturated Steam to SuperHeater		LP BFW		Sat HP Steam		LP Steam to LP Steam Header		Hot Water to Humidification Tower		Tower Bottoms to Surge Tank		Loop Blowdown to Treatment		Sat HP Steam	
Flow	lbmol/hr	lb/hr	lbmol/hr	lb/hr	lbmol/hr	lb/hr	lbmol/hr	lb/hr	lbmol/hr	lb/hr	lbmol/hr	lb/hr	lbmol/hr	lb/hr	lbmol/hr	lb/hr	lbmol/hr	lb/hr	lbmol/hr	lb/hr
AR	0.00	0.00	0.00	0.00	0.00	0.00	0.00	0.00	0.00	0.00	0.00	0.00	0.00	0.00	0.00	0.00	0.00	0.00	0.00	0.00
BTX	0.00	0.00	0.00	0.0	0.00	0.0	0.00	0.00	0.00	0.00	0.00	0.00	0.00	0.00	0.00	0.00	0.00	0.00	0.00	0.00
CH4	0.00	0.00	0.00	0.0	0.00	0.0	0.00	0.00	0.00	0.00	0.00	0.00	0.00	0.00	0.00	0.01	0.37	5.88	0.00	0.00
C2H4	0.00	0.00	0.00	0.0	0.00	0.0	0.00	0.00	0.00	0.00	0.00	0.00	0.00	0.00	0.00	0.00	0.00	0.02	0.00	0.00
C2H6	0.00	0.00	0.00	0.0	0.00	0.0	0.00	0.00	0.00	0.00	0.00	0.00	0.00	0.00	0.00	0.00	0.00	0.07	0.00	0.00
C3H6	0.00	0.00	0.00	0.0	0.00	0.0	0.00	0.00	0.00	0.00	0.00	0.00	0.00	0.00	0.00	0.00	0.00	0.00	0.00	0.00
C3H8	0.00	0.00	0.00	0.0	0.00	0.0	0.00	0.00	0.00	0.00	0.00	0.00	0.00	0.00	0.00	0.00	0.00	0.01	0.00	0.00
C4H8	0.00	0.00	0.00	0.0	0.00	0.0	0.00	0.00	0.00	0.00	0.00	0.00	0.00	0.00	0.00	0.00	0.00	0.00	0.00	0.00
C4H10	0.00	0.00	0.00	0.0	0.00	0.0	0.00	0.00	0.00	0.00	0.00	0.00	0.00	0.00	0.00	0.00	0.00	0.00	0.00	0.00
CH3OH	0.00	0.00	0.00	0.0	0.00	0.0	0.00	0.00	0.00	0.00	0.00	0.00	0.00	0.00	0.00	0.00	0.00	0.00	0.00	0.00
CO	0.00	0.00	0.00	0.0	0.00	0.0	0.00	0.00	0.00	0.00	0.00	0.00	0.00	0.00	0.00	0.00	0.00	0.00	0.00	0.00
CO2	0.00	0.00	0.00	0.0	0.00	0.0	0.00	0.00	0.00	0.00	0.00	0.00	0.00	0.00	0.01	0.34	0.00	0.14	0.00	0.00
COS	0.00	0.00	0.00	0.0	0.00	0.0	0.00	0.00	0.00	0.00	0.00	0.00	0.00	0.00	0.00	0.00	0.00	0.00	0.00	0.00
HCN	0.00	0.00	0.00	0.0	0.00	0.0	0.00	0.00	0.00	0.00	0.00	0.00	0.00	0.00	0.00	0.00	0.00	0.00	0.00	0.00
HCL	0.00	0.00	0.00	0.0	0.00	0.0	0.00	0.00	0.00	0.00	0.00	0.00	0.00	0.00	0.00	0.00	0.00	0.00	0.00	0.00
H2	0.00	0.00	0.00	0.0	0.00	0.0	0.00	0.00	0.00	0.00	0.00	0.00	0.00	0.00	0.00	0.00	0.00	0.00	0.00	0.00
H2O	13.83	249.20	8,319.30	149,872.2	8,319.30	149,872.2	3,816.21	68,748.93	3,996.51	71,997.18	3,816.21	68,748.93	8,326.27	149,997.66	6,135.25	110,526.44	4,084.23	73,577.48	4,322.79	0.00
H2S	0.00	0.00	0.00	0.0	0.00	0.0	0.00	0.00	0.00	0.00	0.00	0.00	0.00	0.00	0.00	0.00	0.00	0.00	0.00	0.00
MIBK	0.00	0.00	0.00	0.0	0.00	0.0	0.00	0.00	0.00	0.00	0.00	0.00	0.00	0.00	0.00	0.00	0.00	0.00	0.00	0.00
N2	0.00	0.00	0.00	0.0	0.00	0.0	0.00	0.00	0.00	0.00	0.00	0.00	0.00	0.00	0.00	0.00	0.00	0.05	0.00	0.00
NH3	0.00	0.00	0.00	0.0	0.00	0.0	0.00	0.00	0.00	0.00	0.00	0.00	0.00	0.00	0.00	0.00	0.00	0.00	0.00	0.00
O2	0.00	0.00	0.00	0.0	0.00	0.0	0.00	0.00	0.00	0.00	0.00	0.00	0.00	0.00	0.00	0.00	0.00	0.00	0.00	0.00
PHENOL	0.00	0.00	0.00	0.0	0.00	0.0	0.00	0.00	0.00	0.00	0.00	0.00	0.00	0.00	0.00	0.00	0.00	0.00	0.00	0.00
SO2	0.00	0.00	0.00	0.0	0.00	0.0	0.00	0.00	0.00	0.00	0.00	0.00	0.00	0.00	0.00	0.00	0.00	0.00	0.00	0.00
Total Flow lbmol/hr	14		8,319		3,997		3,816		3,997		3,816		8,326		6,135		4,085		4,323	
Total Flow lb/hr	249		149,875		71,998		68,750		71,998		68,750		150,000		110,529		73,585		77,876	
Total Flow cuft/hr	4		2,528		33,603		1,163		33,603		1,029,560		3,044		1,753		1,239		36,346	
Temperature F	120		242		540		240		540		260		410		46		152		540	
Pressure psi	269		1,260		960		150		960		28		310		350		375		960	
Vapor Frac	0		0		1		0		1		1		0		0		0		1	
Liquid Frac	1		1		0		1		0		0		1		1		1		0	
Enthalpy Btu/lb	-6,820		-6,653		-5,672		-6,657		-5,672		-5,697		-6,500		-6,899		-6,785		-5,672	
Density lb/cuft	60.5661		59.2861		2.1426		59.0988		2.1426		0.0668		49.2766		63.0471		59.4021		2.1426	
Average MW	18.0153		18.0153		18.0153		18.0153		18.0153		18.0153		18.0153		18.0153		18.0151		18.0153	

This page is intentionally left blank

Exhibit X.2-19 Combustion Turbine System Estimated State Point Compositions and Conditions

SNG to Power Option - Gas Turbine Material Balance

STREAM	120		121		122		123		124	
Description	Air to Gas Turbine		Gas Turbine Exhaust		SNG to Duct Burner		SNG Product to Export		SNG to Gas Turbine Combustor	
Flow	lbmol/hr	lb/hr	lbmol/hr	lb/hr	lbmol/hr	lb/hr	lbmol/hr	lb/hr	lbmol/hr	lb/hr
AR	431.29	17,229.32	431.30	17,229.6	0.00	0.1	0.00	0.08	0.01	0.25
BTX	0.00	0.0	0.00	0.00	0.02	1.52	0.02	1.89	0.07	6.04
CH4	0.00	0	0.00	0	325.30	5,219	405.47	6,504.92	1,296.91	20,806.33
C2H4	0.00	0.0	0.00	0.00	0.31	8.8	0.39	10.97	1.25	35.09
C2H6	0.00	0.0	0.00	0.0	1.58	47.6	1.97	59.32	6.31	189.74
C3H6	0.00	0.00	0.00	0.00	0.03	1.33	0.04	1.65	0.13	5.29
C3H8	0.00	0.0	0.00	0.00	0.60	26.5	0.75	33.09	2.40	105.84
C4H8	0.00	0.00	0.00	0.0	0.00	0.08	0.00	0.10	0.01	0.32
C4H10	0.00	0.0	0.00	0.00	0.03	1.6	0.03	2.01	0.11	6.43
CH3OH	0.00	0.00	0.00	0.00	0.00	0.00	0.00	0.00	0.00	0.00
CO	0.00	0	0.00	0	0.16	4	0.20	5.51	0.63	17.6
CO2	13.54	596	1,335.26	58,763.4	0.14	6	0.17	7.6	0.55	24
COS	0.00	0.0	0.00	0.00	0.00	0.00	0.00	0.00	0.00	0.00
HCN	0.00	0.00	0.00	0.00	0.00	0.00	0.00	0.00	0.00	0.00
HCL	0.00	0.00	0.00	0.00	0.00	0.00	0.00	0.00	0.00	0.00
H2	0.00	0	0.00	0	5.06	10	6.31	12.72	20.18	40.68
H2O	496.20	8,938.98	3,142.44	56,611.06	0.00	0.00	0.00	0.00	0.00	0.0
H2S	0.00	0	0.00	0.00	0.00	0.00	0.00	0.00	0.00	0.0
MIBK	0.00	0.00	0.00	0.00	0.00	0.00	0.00	0.00	0.00	0.00
N2	35,434.83	992,671	35,465.11	993,520	7.60	213	9.47	265.22	30.28	848
NH3	0.00	0.00	0.00	0.00	0.00	0.00	0.00	0.00	0.00	0.00
O2	9,528.38	304,889.20	6,884.41	220,287.45	0.00	0.00	0.00	0.00	0.00	0.00
PHENOL	0.00	0.00	0.00	0.00	0.00	0.00	0.00	0.00	0.00	0.00
SO2	0.00	0.00	0.00	0.00	0.00	0.00	0.00	0.00	0.00	0.00
Total Flow lbmol/hr	45,904		47,259		341		425		1,359	
Total Flow lb/hr	1,324,310		1,346,400		5,540		6,905		22,086	
Total Flow cuft/hr	17,373,100		44,284,500		7,668		9,557		30,569	
Temperature F	59		855		120		120		120	
Pressure psi	15		15		269		269		269	
Vapor Frac	1		1		1		1		1	
Liquid Frac	0		0		0		0		0	
Enthalpy Btu/lb	-45		-210		-1,886		-1,886		-1,886	
Density lb/cuft	0.0762		0.0304		0.7225		0.7225		0.7225	
Average MW	28.8495		28.4901		16.2537		16.2537		16.2537	

5/24/2006

This page is intentionally left blank

Exhibit X.2-20 Steam Turbine & HRSG System Estimated State Point Compositions and Conditions

SNG to Power Option - Steam Turbine Material Balance

STREAM	130		131		132		133		134		135		136	
Description	HP Throttle Steam		Steam to Oxidant Heater		Steam Turbine Exhaust		Condensate		Heated Condensate		Condensate to Deaerator		Flue Gas to Stack	
Flow	lbmol/hr	lb/hr	lbmol/hr	lb/hr	lbmol/hr	lb/hr	lbmol/hr	lb/hr	lbmol/hr	lb/hr	lbmol/hr	lb/hr	lbmol/hr	lb/hr
AR	0.00	0.00	0.00	0.0	0.00	0.0	0.00	0.00	0.00	0.00	0.00	0.00	432.54	17,279.20
BTX	0.00	0.0	0.00	0.00	0.00	0.00	0.00	0.00	0.00	0.00	0.00	0.00	0.00	0.00
CH4	0.00	0	0.00	0	0.00	0	0.00	0.00	0.00	0.00	0.00	0.00	0.00	0.00
C2H4	0.00	0.0	0.00	0.00	0.00	0.0	0.00	0.00	0.00	0.00	0.00	0.00	0.00	0.00
C2H6	0.00	0.0	0.00	0.0	0.00	0.0	0.00	0.00	0.00	0.00	0.00	0.00	0.00	0.00
C3H6	0.00	0.00	0.00	0.00	0.00	0.00	0.00	0.00	0.00	0.00	0.00	0.00	0.00	0.00
C3H8	0.00	0.0	0.00	0.00	0.00	0.0	0.00	0.00	0.00	0.00	0.00	0.00	0.00	0.00
C4H8	0.00	0.00	0.00	0.0	0.00	0.00	0.00	0.00	0.00	0.00	0.00	0.00	0.00	0.00
C4H10	0.00	0.0	0.00	0.00	0.00	0.0	0.00	0.00	0.00	0.00	0.00	0.00	0.00	0.00
CH3OH	0.00	0.00	0.00	0.00	0.00	0.00	0.00	0.00	0.00	0.00	0.00	0.00	0.00	0.00
CO	0.00	0	0.00	0	0.00	0	0.00	0.00	0.00	0.0	0.00	0.0	0.00	0.00
CO2	0.00	0	0.00	0.0	0.00	0	0.00	0.0	0.00	0	0.00	0	4,390.81	193,234.98
COS	0.00	0.0	0.00	0.00	0.00	0.00	0.00	0.00	0.00	0.00	0.00	0.0	0.00	0.00
HCN	0.00	0.00	0.00	0.00	0.00	0.00	0.00	0.00	0.00	0.00	0.00	0.00	0.00	0.00
HCL	0.00	0.00	0.00	0.00	0.00	0.00	0.00	0.00	0.00	0.00	0.00	0.00	0.00	0.00
H2	0.00	0	0.00	0	0.00	0	0.00	0.00	0.00	0.00	0.00	0.00	0.00	0.00
H2O	20,256.02	364,912.20	203.83	3,671.94	16,514.86	297,515.20	16,514.86	297,515.20	16,514.86	297,515.2	16,514.86	297,515.2	3,953.23	71,217.51
H2S	0.00	0	0.00	0.00	0.00	0.00	0.00	0.00	0.00	0.0	0.00	0	0.00	0.00
MIBK	0.00	0.00	0.00	0.00	0.00	0.00	0.00	0.00	0.00	0.00	0.00	0.00	0.00	0.00
N2	0.00	0	0.00	0	0.00	0	0.00	0.00	0.00	0	0.00	0.00	35,468.46	993,613.44
NH3	0.00	0.00	0.00	0.00	0.00	0.00	0.00	0.00	0.00	0.00	0.00	0.00	0.00	0.00
O2	0.00	0.00	0.00	0.00	0.00	0.00	0.00	0.00	0.00	0.00	0.00	0.00	6,050.56	193,605.85
PHENOL	0.00	0.00	0.00	0.00	0.00	0.00	0.00	0.00	0.00	0.00	0.00	0.00	0.00	0.00
SO2	0.00	0.00	0.00	0.00	0.00	0.00	0.00	0.00	0.00	0.00	0.00	0.00	0.00	0.00
Total Flow lbmol/hr	20,256	7,751	204		16,515		16,515		16,515		16,515		50,296	
Total Flow lb/hr	364,918		3,672		297,520		297,520		297,520		297,520		1,468,940	
Total Flow cuft/hr	323,641		5,061		114,286,000		4,788		4,932		4,967		26,261,100	
Temperature F	900		776		92		92		193		210		255	
Pressure psi	865		510		1		250		245		195		15	
Vapor Frac	1		1		1		0		0		0		1	
Liquid Frac	0		0		0		1		1		1		0	
Enthalpy Btu/lb	-5,413		-5,467		-5,907		-6,805		-6,705		-6,688		-741	
Density lb/cuft	1.1275		0.7256		0.0026		62.1419		60.3196		59.9014		0.0559	
Average MW	18.0153		18.0153		18.0153		18.0153		18.0153		18.0153		29.2062	

5/24/2006 0:00

This page is intentionally left blank

X.3 PLOT PLAN AND SITE LAYOUT

A conceptual general equipment arrangement and plot plan is shown in Exhibit X.3-1. The land requirement for the SNG to Power Reference Plant is estimated to be about 20 acres not including the ASU. About 11 acres is allocated for the SNG production plant, and about 9 acres fro the combined cycle power system, cooling water system, and BOP systems. An additional 2.6 acres is allocated for the ASU plant and supporting systems.

An elevation drawing of a conceptual BGL gasification package installation containing one operating and one spare gasifier is shown in Exhibit X.3-2. The overall height of the structure housing the equipment, including height required for coal and limestone feed system above each gasifier and that required for slag removal system below the gasifier, is about 115 feet.

Exhibit X.3-1 Conceptual General Equipment Arrangement and Plot Plan for SNG to Power Reference Plant

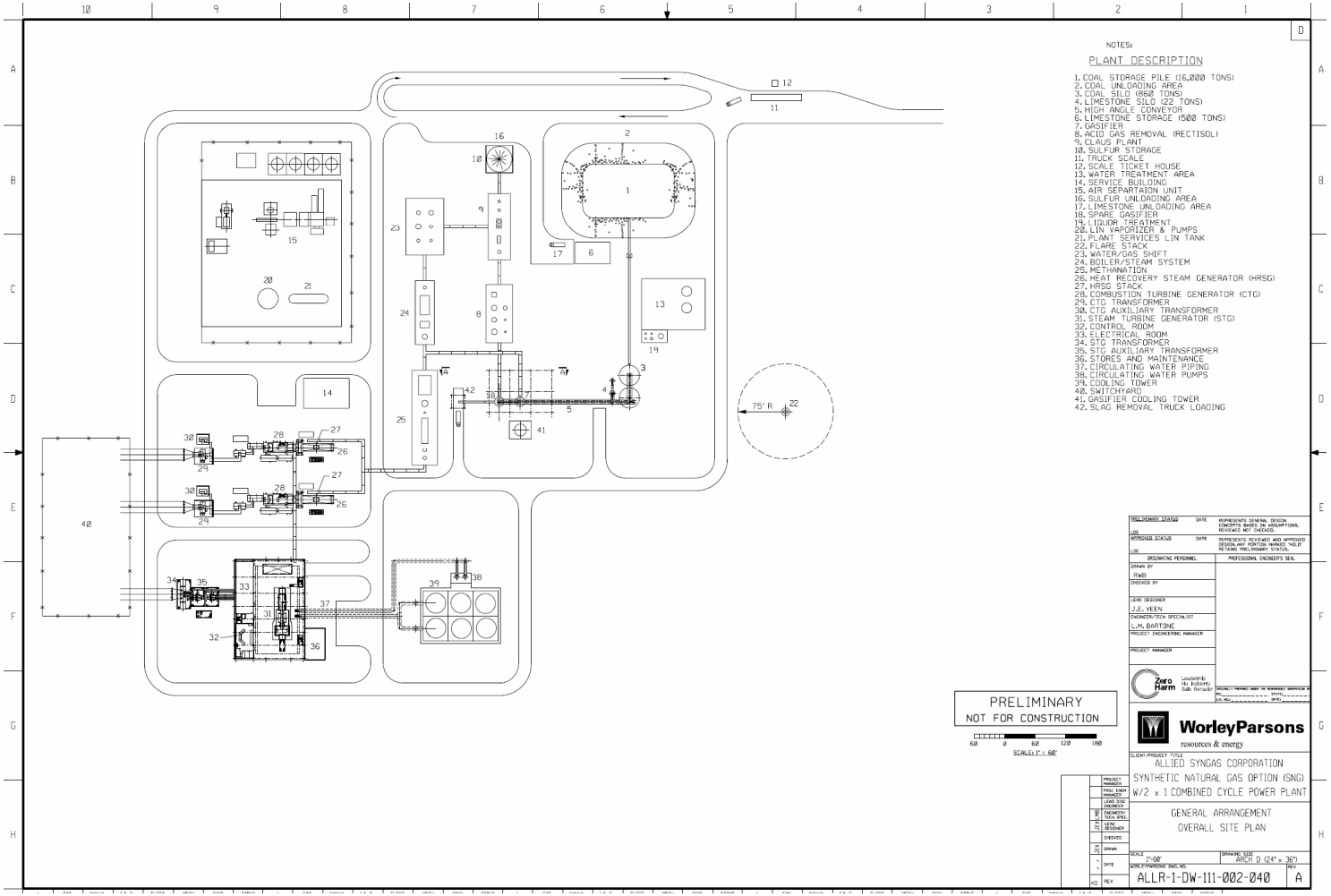

Exhibit X.3-2 Conceptual Elevation of Gasification Process Installation

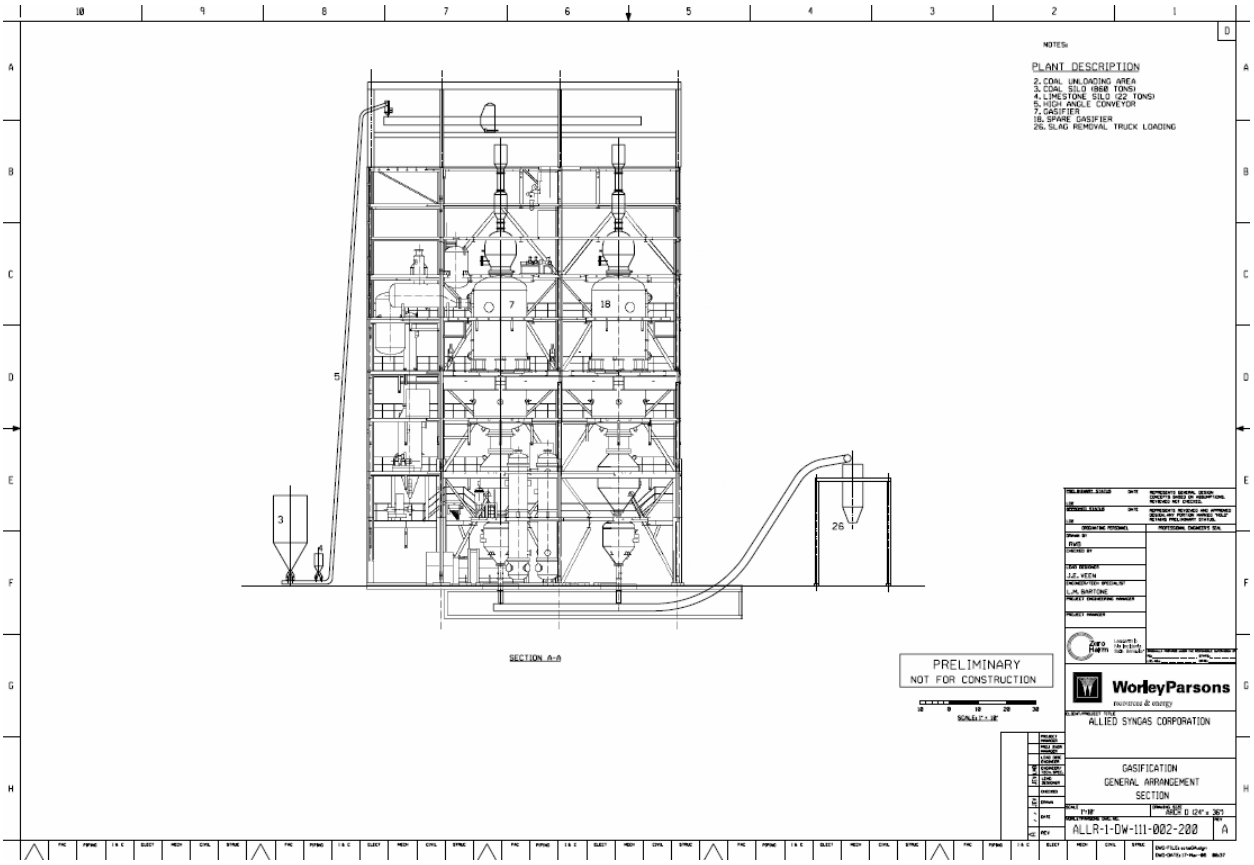

This page is intentionally left blank

X.4 SOLIDS HANDLING SYSTEMS DESCRIPTIONS

X.4.1 COAL RECEIVING, STORAGE, AND HANDLING

Illinois #6 coal, presized to ¼" x 2", is received, stored, mixed with limestone (flux), transported to the gasifier, and fed into the gasifier lock hopper. A simplified process flow diagram of the system and equipment general arrangements are shown in Exhibit X.4-1 and Exhibit X.4-2.

X.4.1.1 Coal Receiving and Storage

The coal receiving and storage system receives coal, meeting the specifications defined in the Design Requirements Document, from delivery trucks and stores the coal in an outdoor area for reclaim and transport to the gasifier feed system. The system is designed to receive and unload a minimum of 10 coal delivery trucks per hour (70 trucks per day). This allows for receipt of 7 days gasifier consumption at 100% load in 5 days, with unloading occurring over a 7 hour period per day. Trucks will not normally be received at night or on weekends. Coal trucks may range from a 23 ton net tri-axle up to a "Kentucky" type truck rated for 50 ton net weight. The system includes a truck scale for weighing delivery trucks entering and leaving the plant.

The outdoor coal storage area, measuring about 150 ft. by 200 ft., is sized to store about 16,000 tons of coal, sufficient to fuel the gasifier for 14 days at full operating capacity.

X.4.1.2 Coal Handling and Preparation System

The Coal Handling and Preparation System is designed to perform the following functions:

- Reclaim as-received coal from the coal storage area,
- Screen the coal to remove any material greater than 2" in size,
- Remove magnetic material,

- Store the prepared coal in day bins (18 hour), and
- Meter coal from the day bins to a gasifier feed conveyor.

Coal is reclaimed from the long-term storage pile by a 40 ft. long, 18 degree reclaim feeder and delivered to a vibrating screen at a rate of 250 tons per hour, as shown in Exhibit X.4-1. The vibrating screen separates oversized (>2") material onto an oversize conveyor that transports the oversized material to an oversized material pile. Coal meeting the top size specification is transported via a high angle conveyor to a reversible belt conveyor that distributes the coal to two, 60° cone type storage silos, each with a capacity of 430 tons. The high angle conveyor consists of two motor driven belts between which the solid material to be transported is sandwiched. An example of a Snake Sandwich High Angle Conveyor manufactured by Dos Santos International for feeding two coal silos is shown in Exhibit X.4-3. High angle conveyors are used to minimize the land requirement for the syngas production plant. The two silos are steel vessels each 32 feet in diameter with straight shell heights of 45 feet. The total silo capacity is sufficient for 18 hours coal consumption by the gasifier at 100% load. On its way to the silos, the coal is passed through a magnetic material separator where magnetic material is removed and dumped into a container for disposal, and is weighed via a coal scale to measure the quantity of coal being fed to the silos.

Coal is metered from each day silo by a silo discharge feeder onto one of two 100% capacity high angle gasifier feed conveyors, via a two-way diverter gate at the discharge of each silo, at a rate of about 47.7 short tons/hour.

X.4.2 LIMESTONE RECEIVING, STORAGE, AND HANDLING

Limestone, presized to ¼" x 3/4", is received, stored, mixed with coal, transported to the gasifier, and fed into the gasifier lock hopper. A simplified process flow diagram of the system and equipment general arrangements are also shown in Exhibit X.4-1 and Exhibit X.4-2.

X.4.2.1 Limestone Receiving and Storage

The limestone receiving and storage system receives limestone, meeting the specifications defined in the Design Requirements Document, from delivery trucks and stores the limestone in an outdoor area for reclaim and transport to the gasifier feed system. The system is designed to receive and unload a minimum of two, 23-ton limestone delivery trucks in a 7-hour period each day. This

allows for receipt of 7 days gasifier consumption at 100% load in 5 days. Trucks will not normally be received at night or on weekends. The limestone delivery trucks will be weighed as they enter and leave the facility via the same scales as used for weighing the coal delivery trucks.

The outdoor limestone storage area, measuring about 34 ft. by 55 ft., is sized to store about 500 tons of limestone, sufficient to fuel the gasifier for 14 days at full operating capacity.

X.4.2.2 Limestone Handling and Preparation System

The Limestone Handling and Preparation System is designed to perform the following functions:

- Reclaim as-received limestone from the coal storage area,
- Store the limestone in a day bin (18 hour), and
- Meter limestone from the day bin to a gasifier feed conveyor.

Limestone is reclaimed from the long-term storage via a front end loader and placed in a reclaim screw feeder hopper, as shown in Exhibit X.4-1. A screw feeder then transports the limestone at a rate of 10 tons per hour to a high angle conveyor that transports the limestone to a 60° cone type storage silo having a capacity of 22 tons, sufficient for 18 hours consumption by the gasifier at 100% load. An example of a Snake Sandwich High Angle Conveyor manufactured by Dos Santos International for feeding the limestone silo is shown in Exhibit X.4-4. The silo is a steel vessel, 8 feet in diameter with straight shell height of 12 feet.

Limestone is metered from the day silo by a silo discharge feeder onto one of two 100% capacity high angle gasifier feed conveyors, via a two-way diverter gate at the discharge of the silo, at a rate of about 1.2 tons/hr.

X.4.3 COAL/LIMESTONE GASIFIER DELIVERY SYSTEM

The coal and limestone gasifier delivery system conveys the coal and limestone mixture to the gasifier feed lock hopper. Coal and limestone from the day bins are transported via one of two 100% high angle gasifier feed conveyors to a 50-ton weigh hopper located above the gasifier feed lock hopper. The weigh hopper's capacity is equivalent to one hour's consumption by the gasifier at 100% load. An example of a Snake Sandwich High Angle Conveyor manufactured by Dos Santos International for feeding coal/limestone

to the weigh hopper is shown in Exhibit X.4-5. Approximately 7 tons of coal/limestone mixture is metered from the 50-ton weigh hopper into a 7-ton hopper located between the 50 ton weigh hopper and the gasifier. At approximately 10 minute intervals, the coal/limestone mixture in the 7-ton hopper is dumped into the gasifier feed lockhopper.

Exhibit X.4-1 Simplified Process Flow Diagram of Coal and Limestone Receiving, Storage, and Handling System

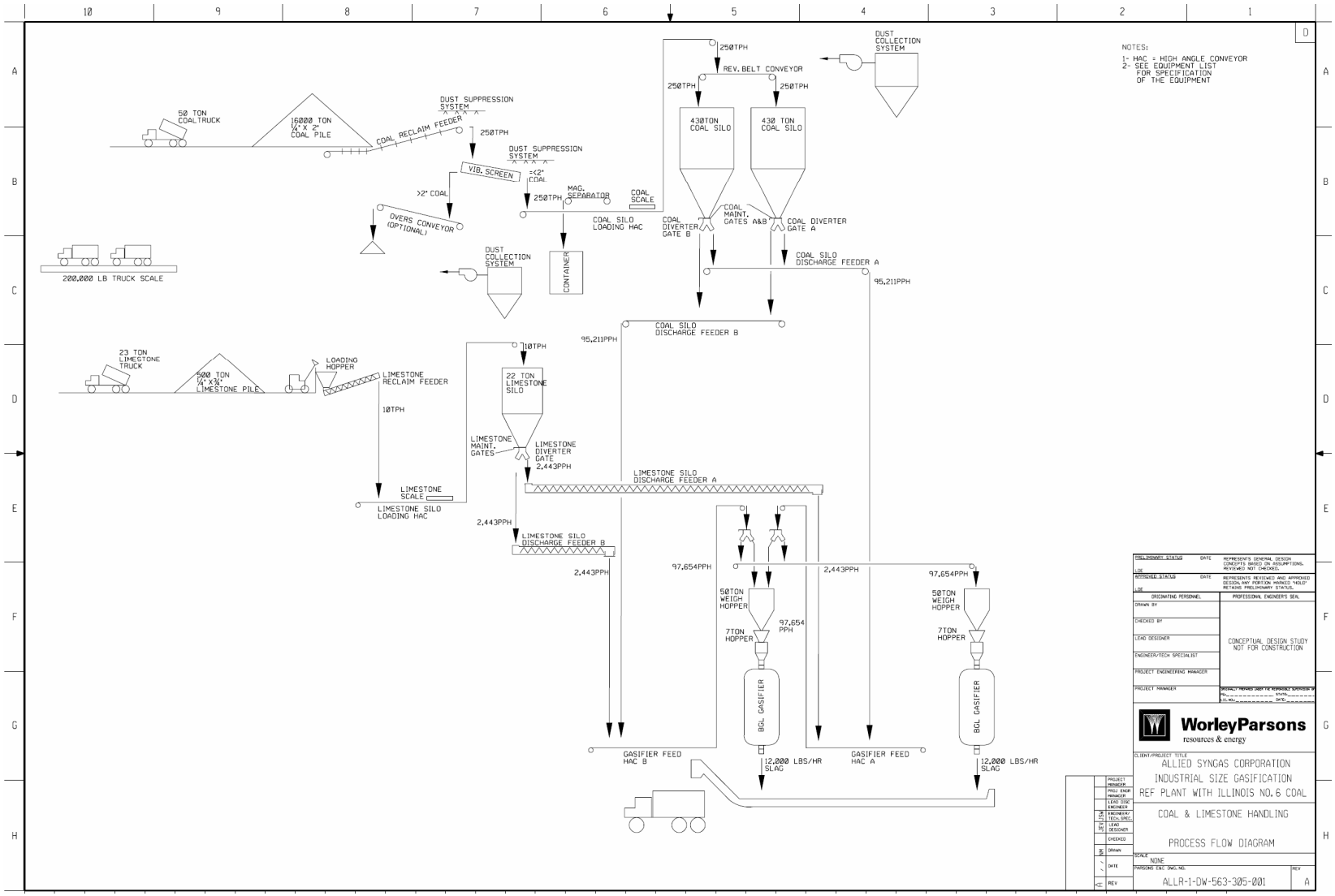

Exhibit X.4-2 Coal and Limestone Storage and Handling Systems General Arrangement

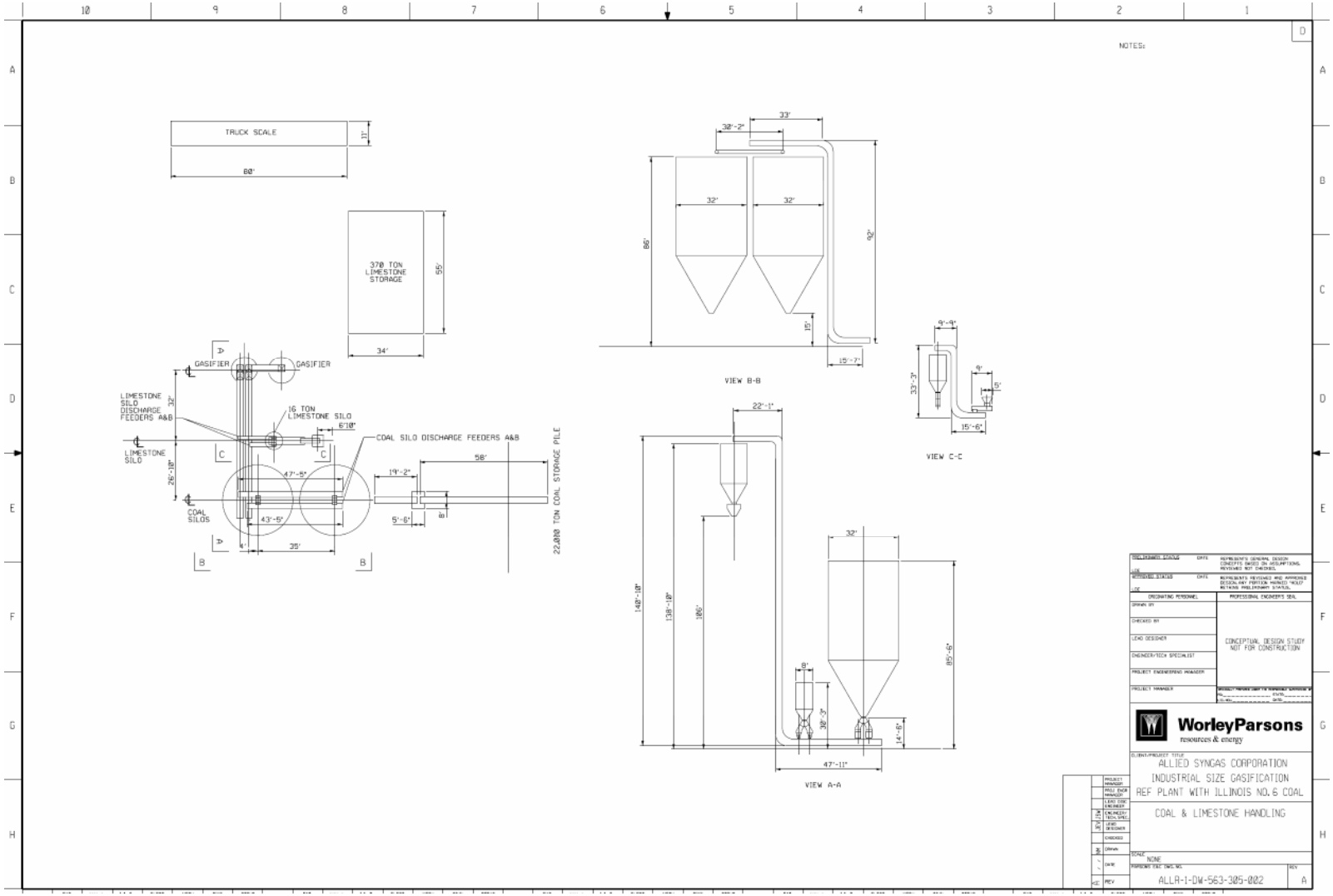

Exhibit X.4-3 Example of Snake Sandwich High Angle Conveyor by Dos Santos International for Feeding Coal Silos

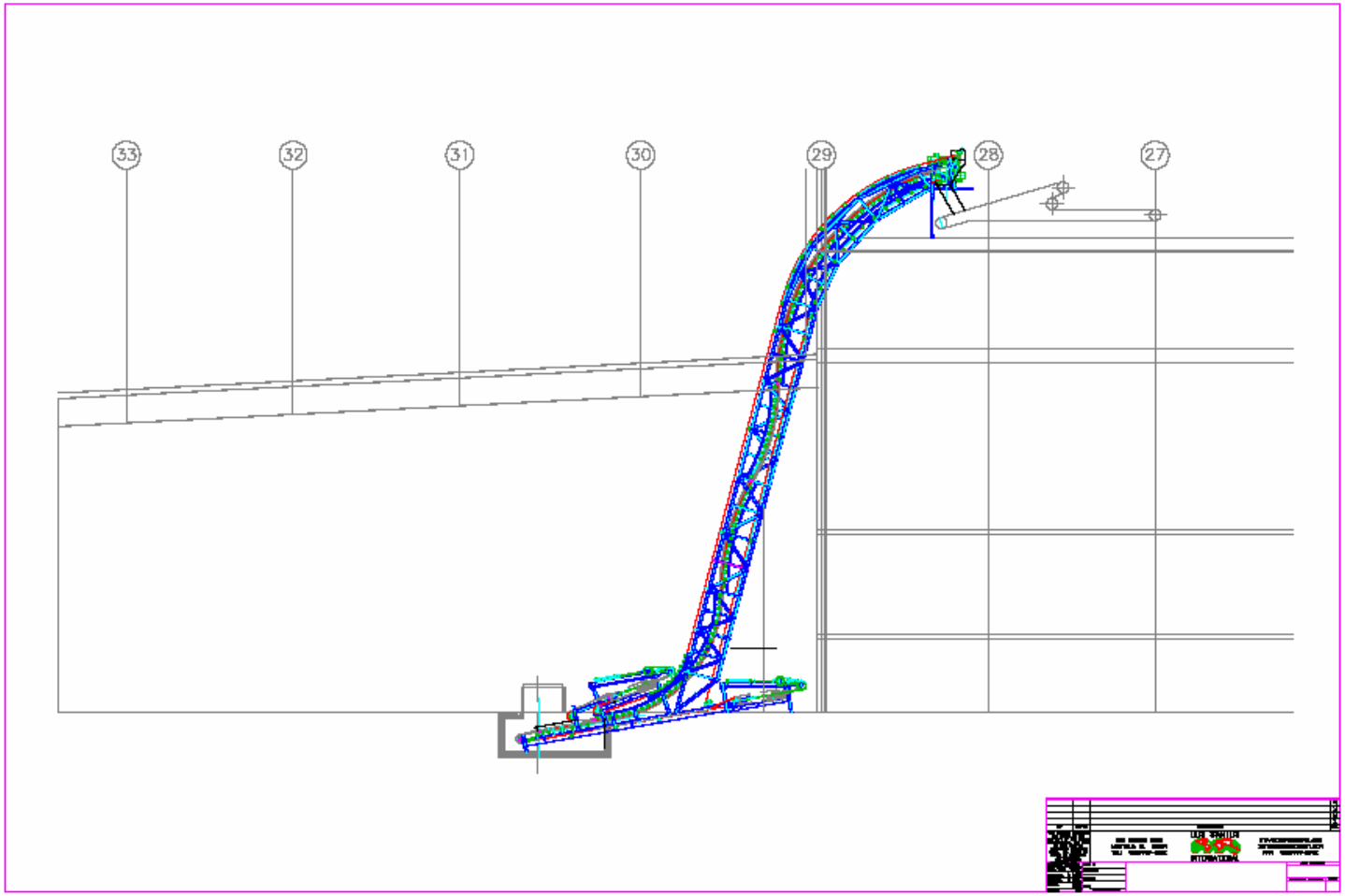

Exhibit X.4-4 Example of Snake Sandwich High Angle Conveyor by Dos Santos International for Feeding Limestone Silo

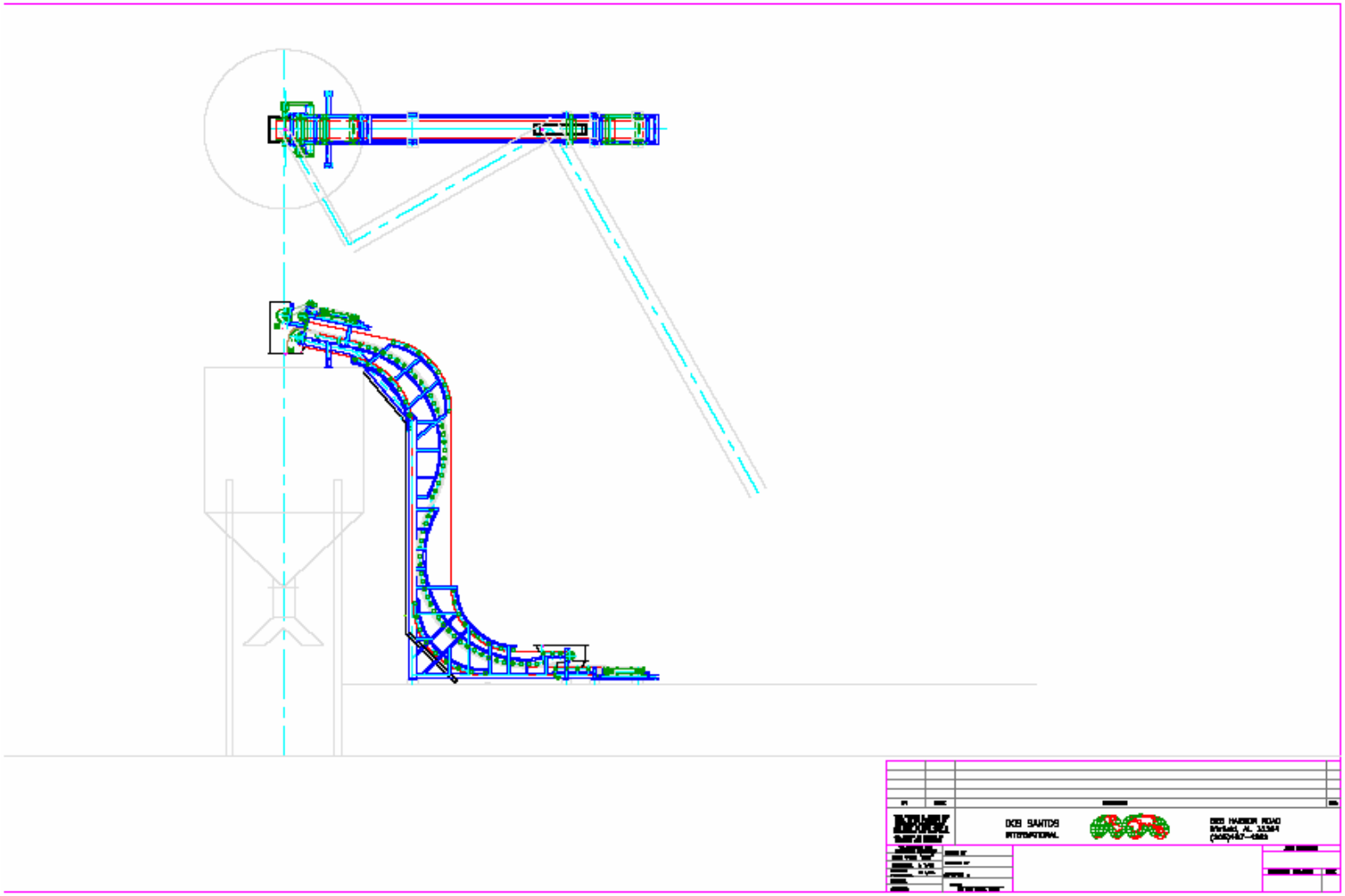

Exhibit X.4-5 Example of Snake Sandwich High Angle Conveyor by Dos Santos International for Feeding Coal/Limestone to Gasifier Hopper

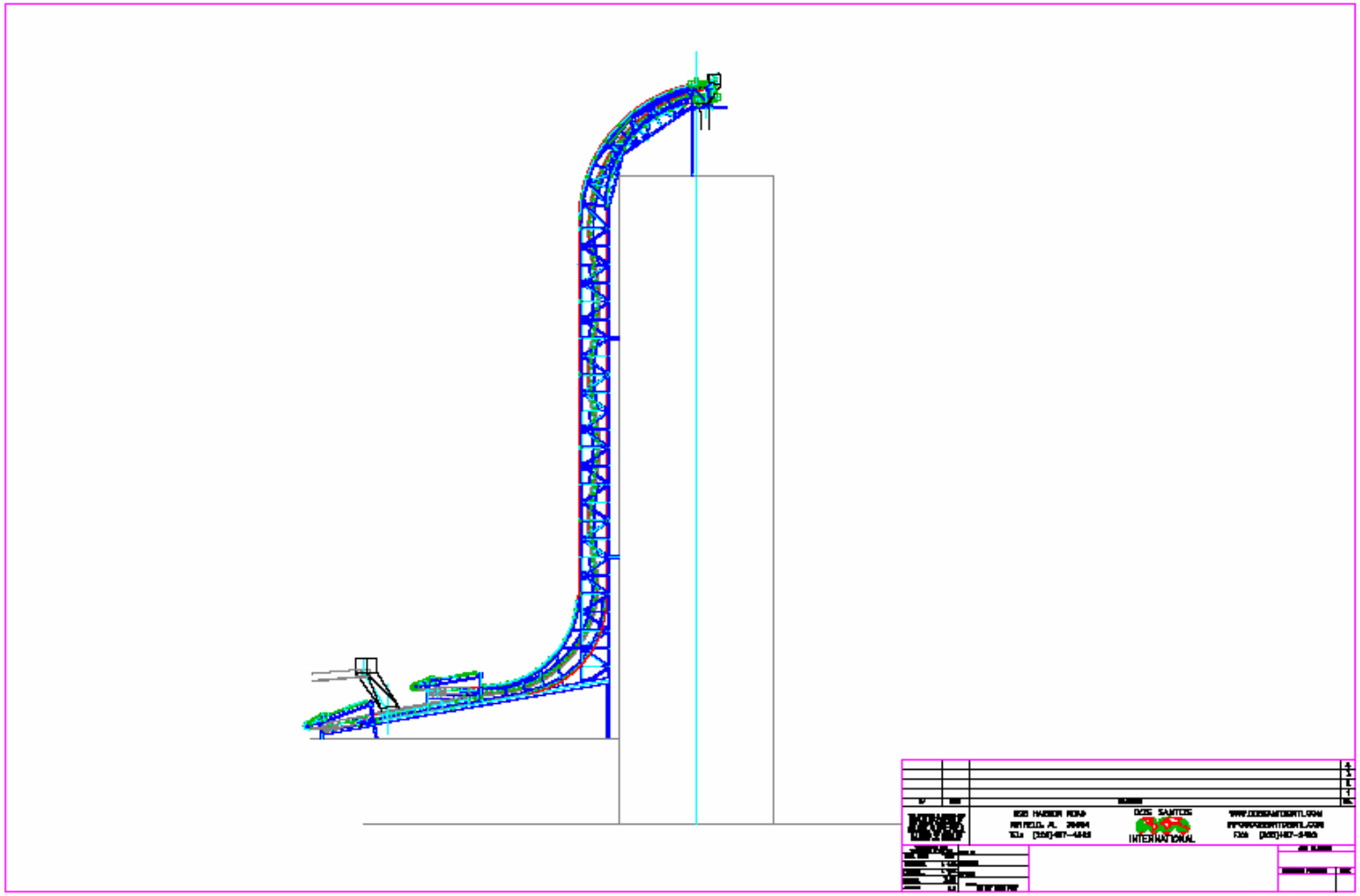

X.4.4 SLAG HANDLING

The slag handling system collects approximately 7 tons/hour of slag from the gasifier slag lock hopper and transports it to a storage/truck loading area for sale as a byproduct or disposal. The system consists of a water-filled trough with drag-chain conveyor that transports the slag to a truck loading station.

The system will be controlled via a stand alone PLC with DCS interface, and will be provided with instrumentation and components as required for a complete functional, reliable, and safe operating system.

X.5 GASIFIER PROCESS PACKAGE DESCRIPTION

The gasifier process package includes the following:

- Two gasifiers (one operating and one spare) each with coal, limestone, oxygen, steam, and nitrogen feed systems; a slag removal system; and a syngas wash cooler
- Primary syngas heat exchanger (waste heat exchanger)
- Syngas coolers
- Gas/liquor separation and tar/oil reinjection system.

Refer to the conceptual process flow diagram in Exhibit X.2-3 and the table in Exhibit X.2-12 for estimated state point composition and conditions for the gasifier process package.

X.5.1 GASIFIER

The BGL gasifier is a slagging, fixed bed gasification process utilizing counter current gas/solid flow. It is designed to process about 1,145 tons/day of Illinois #6 coal. A concept sketch of the gasifier is shown in Exhibit X.5-1. Coal is introduced into the top of the gasifier through a feed lock. The gasification agents, steam and oxygen, are injected through the tuyeres in the lower part of the gasifier into a hot fuel bed. Gaseous reaction products ascend countercurrent to the coal. A stirrer is incorporated in the top of the gasifier when the fuel is a caking coal to ensure smooth continuous flow of coal into the gasifier.

The gasifier is designed to achieve a smooth transition of the fuel from the solid to the gaseous phase. Essentially cold solids that enter at the top of the reactor are heated by hot gases rising from the bottom. The counter-current principle results in one of the lowest oxygen consumption rates of commercial gasification processes.

Exhibit X.5-1 Schematic of Gasifier

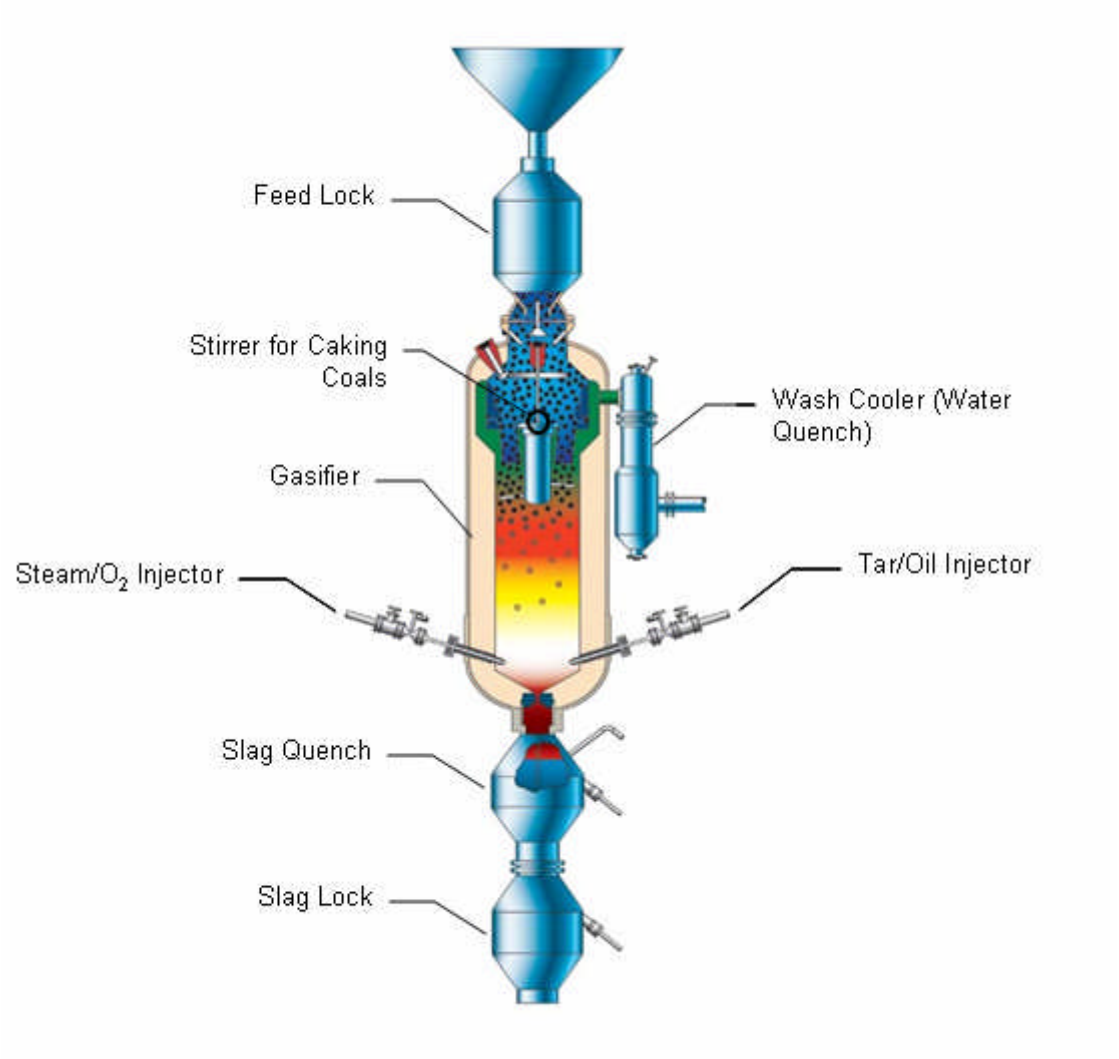

Upon further devolatilization, the coal yields a char or semi-coke that is mainly a carbon skeleton. This process is known as "char conditioning." The formation of well conditioned char within the stirred zone favors good bed behavior.

The gasifier operates at elevated pressure (about 350 psia). The elevated pressure leads to smaller main equipment dimensions and reduces effective gas volume that makes the downstream units smaller in volume and simpler in design.

Liquid slag is discharged by a tap hole arranged centrally at the bottom of the hearth into a water bath in the slag quench vessel. Through rapid cooling, the slag is converted into a solid frit that can simply be disposed of or utilized further.

The gasification media – steam and oxygen – are injected into the gasifier through water-cooled nozzles (tuyeres). Steam and oxygen react immediately with the coke from the gasification zone to form mainly hydrogen and carbon monoxide.

The upward flowing crude gas leaves the fuel bed with a low velocity so that the dust discharge with the gas is minimized.

The crude gas exiting the gasifier enters a wash cooler where the gas is washed intensely with gas liquor, quenched, and saturated with steam. Simultaneously, higher hydrocarbons (tar) condense and dust from the gas is removed. The raw gas is then routed to the first gas cooling stage (waste heat boiler).

X.5.2 COAL/LIMESTONE FEED SYSTEM

As mentioned previously, the gasification process is under pressure. The coal and limestone (flux) solid mixture is fed to the gasifier reactor via a feed lock operated on a batch basis, loading about 7 tons of coal/limestone mixture during each loading cycle. A limited fuel storage capacity is kept in the top of the gasifier, adding to the safety of the process as it allows the process to continue even if coal lock problems occur. The coal/limestone batch lock hopper cycling contains the following steps:

- Starting with an empty depressurized coal/limestone lock, the bottom cone valve is closed and the top cone valve is opened. Coal and limestone drop by gravity into the lock from a weigh hopper containing only enough coal/limestone mixture to fill the lock.
- The top cone valve is then closed and the lock is pressurized with syngas from the syngas coolers. Syngas is used for lock pressurization in the SNG production plant to prevent dilution of the SNG product with nitrogen with a resulting reduction in product heating value.
- The bottom cone valve is opened and the fuel gravitates into the gasifier. The system is designed such that for safety reasons the bottom cone valve can be opened only at an even pressure between the gasifier and lock.
- When the lock is empty, the bottom cone valve is closed automatically and the lock is depressurized.
- The top cone valve is opened, the remaining gas is ejected and collected for use as supplemental fuel in the HRSG.

- The cycle is then repeated.

X.5.3 SLAG REMOVAL SYSTEM

The slag removal system consists of a natural gas ring burner, slag quench tank, and slag lock. About 7 tons/hr of slag is intermittently tapped and water quenched automatically, to form a frit that is locked out of the system before being collected and transported for disposal or utilization.

To maintain temperature of the slag pool in the hearth, to prevent tap blockage, and to consume any remaining coke particles, a ring burner is installed underneath the central tap hole of the gasifier. Oxygen is used as the oxidant to the ring burner in the SNG production plant to prevent dilution of the SNG product with nitrogen with a resulting reduction in product heating value. Hot burner gases flow through the slag nozzle into the gasifier and keep the slag in the hearth. After a specific slag height has been reached, as indicated by the differential pressure, the burner is automatically switched to part load operation. The excess pressure of the quench vessel is slightly reduced (below the gasifier pressure) and the liquid slag is discharged through the slag tap into a water-filled slag quench vessel. Upon reaching the minimum slag level, the burner returns to normal operating mode and the tapping is ended. The slag level is controlled automatically via a differential pressure between the quench vessel and slag hearth.

When quenched, the slag forms a glassy granular fritted material of approximately 1/8 inch in diameter. The granular material gravitates further into the water filled slag lock. The sensible heat of the slag is removed via a cooling circuit.

The slag lock works according to the same principle as the coal/limestone lock. It is filled with water and pressurized. The slag is discharged, via a chute, onto a slag conveyor belt and transported to intermediate storage.

X.5.4 SYNGAS WASH COOLER

Raw gas leaves the top of the gasifier above the fuel bed at a temperature of less than 1,000°F and enters the wash cooler (water quench) directly flanged to the gasifier. The raw gas is directly quenched, cooled, and saturated by circulated gas liquor from the gas liquor separation system. The raw gas temperature is reduced

to about 330°F. Simultaneously, dust carried with the gas and tar is removed from the gas.

The multi-phase flow from the wash cooler is then directed to the waste heat exchanger (primary heat exchanger).

X.5.5 WASTE HEAT EXCHANGER (PRIMARY HEAT EXCHANGER)

The raw gas from the wash cooler enters the primary heat exchanger and is cooled to about 311°F by transferring heat to boiler feed water and generating about 17,610 lb/hr of low pressure steam (75 psia / 309°F). A portion of the cooled gas is then directed to the water-gas shift system and a portion is sent to the syngas cooling system for further cooling for transport to the AGR system. Gas liquor and hydrocarbon condensate are discharged automatically from the sump of the heat exchanger to the gas liquor separation unit.

X.5.6 SYNGAS COOLING SYSTEM

Approximately 58,043 lb/hr of syngas from the primary heat exchanger is cooled via three tubular heat exchangers from about 311°F to about 95°F before the major portion of it (40,769 lb/hr) is transported to the AGR system and the remainder (4,500 lb/hr) is used for purging the gasifier feed lock. Approximately 1.0 million lb/hr of circulating water is used to cool the syngas. Gas liquor condensate from the coolers is discharged to the liquor separation process for removal of hydrocarbons and then to the liquor treatment system prior to recycling the waste water or discharging it to the environment.

X.5.7 GAS LIQUOR SEPARATION AND TAR/OIL REINJECTION SYSTEM

The gas liquor separation and tar/oil reinjection system removes tars and oils from the gas liquor from the primary heat exchanger (waste heat exchanger) and syngas coolers and recycles the tars/oils back to the gasifier.

The tars, oils, and solids are removed from the gas liquor by gravity separation, achievable by an adequate settling time in the tar and condensate separators, and a sufficient difference in the specific gravity between water and the tar/oil fractions. Tars and oils are collected in a liquids products tank, along with BTX from the Rectisol AGR system and phenol from the waste water treatment system. The liquid products (about 7,960 lb/hr) are recycled from the tank to

the gasifier. Phenol containing gas liquor condensate from the separation system is transported to the waste water treatment system. Sour gas from the separation system is sent to the Claus unit for sulfur recovery. Cooling water is supplied to the system from the circulating water system, and about 1,611 lb/hr of steam to heat liquor in the separation system is provided from the low pressure steam header in the steam system.

X.6 WATER-GAS SHIFT REACTION

Refer to the conceptual process flow diagrams in Exhibit X.2-8, and the tables in Exhibit X.2-17 for estimated state point composition and conditions for the water-gas shift system.

The production of hydrogen from syngas can be increased if the CO present in the syngas is converted or "shifted" to H_2. This reaction is the well-known water-gas shift reaction. This reaction is exothermic and uses H_2O to convert CO to H_2 and CO_2. This reaction is easily accomplished via a fixed-bed catalytic reactor within a temperature range of 500 to 800°F. The reaction is typically carried out in a series of reactors in order to limit the temperature rise across any single reaction stage.

In the configuration presented here, syngas is shifted prior to the acid gas removal process. This approach is referred to as a "sour shift" to differentiate it from a shift process configured after the acid gas removal step (sweet shift). A sour shift takes place in the presence of H_2S and COS and uses a different catalyst composition than that of a sweet shift.

Approximately 142,060 lb/hr of particulate-free syngas from the Waste Heat Boiler is directed to a Humidification Tower. This vessel is a tray-tower where warm water is counter-currently contacted with cool syngas from the Waste Heat Exchanger. This contact serves two purposes: (1) it heats the syngas, and, (2) it saturates the syngas. Saturated syngas from the humidification tower is superheated and then steam is added such that the combined stream H_2O/CO ratio is 2.5. This steam-to-CO ratio will be enough to drive the gas shift reaction and will inhibit the formation of soot and carbonaceous material at the specified reaction temperatures.

The Guard Bed is the first in a series of three shift reactors and takes the brunt of the sulfur specie attack that slowly deactivates the shift catalyst. A relatively small amount of CO is shifted in the Guard Bed. The Primary Bed receives the cooled gas from the Guard Bed and converts additional CO to H_2. The Secondary Bed is the final of three

catalytic fixed-bed reactors. The Secondary Bed completes the shift process.

The shifted syngas, now hydrogen rich, is cooled and routed to a desaturation tower. This vessel is a trayed column designed to simultaneously cool the hydrogen rich gas as well as to retrieve as much water as possible from the shifted syngas. The recovered water then reenters the humidification loop. The 158,184 lb/hr of shifted syngas leaving the desaturation tower is combined with the 40,769 lb/hr syngas stream from the syngas coolers and is transported to the AGR process.

X.7 SYNGAS CLEANUP SYSTEM DESCRIPTION

The syngas cleanup system consists of an acid gas removal (AGR) system, and sulfur production system. The AGR system utilizes a Rectisol process to concentrate and remove sulfur in the form of H_2S and COS and trace contaminants from the syngas prior to the syngas being transported to the end-user. The Rectisol process was selected based on results of a preliminary evaluation of commercially available AGR technologies, as discussed in the Conceptual Design Requirements Document in Section V.

Sour gas from the Rectisol process enters a Claus process for production of elemental sulfur byproduct from the H_2S.

Data from tests on a BGL gasification process indicate that greater than 90% of the mercury entering the system with the coal reports to the gas liquor stream, and levels below detectable limits report to the syngas. Therefore, it is not anticipated that additional mercury removal from the syngas will be required, and no mercury removal system is included in the reference plant. However, if future testing indicates that additional mercury removal is required to meet environmental criteria, this could be accomplished via an activated carbon bed upstream of the AGR system.

X.7.1 RECTISOL PROCESS DESCRIPTION

Approximately 158,184 lb/hr of syngas from the water-gas shift reaction system and 40,769 lb/hr of syngas from the syngas coolers enter an H_2S absorber after being cooled by cleaned syngas leaving the absorber. Refer to the conceptual process flow diagram in Exhibit X.2-4 and the table in Exhibit X.2-13 for estimated state point composition and conditions for the AGR system.

In the absorber, the raw gas is washed clean of not only H_2S and COS, but also HCN, NH_3, and BTX. The majority of the methanol is recovered in a hot regenerator and methanol stripper. A small amount of fresh methanol is required (about 20 lb/hr)

The raw gas is first prewashed in the bottom section of the absorber and then enters the main section of the absorber via a chimney tray. Laden prewash methanol leaving the bottom of the absorber is routed to a sour flash. The sour gas from the sour flash is directed to the Claus plant. The liquid from the sour flash is sent to a stabilizer tank, where water is introduced, and then to a decanter. BTX from the decanter is transported to the liquids product tank in the gas liquor separation system for recycle back into the gasifier. The remaining liquid from the decanter is heated by low pressure steam prior to being introduced into the methanol stripper. Water from the stripper is directed to the waste water treatment system.

The sulfur-free gas leaving the absorber at the top is reheated in the raw syngas cooler. The resulting product syngas, about 65,100 lb/hr, with a sulfur concentration of less than 100 ppbv, at a pressure of about 300 psia, is transported to the methanation process. About 117,000 lb/hr of CO_2 rich tailgas from the Rectisol process is used as fuel in the HRSG duct burner. About 35 lb/hr of syngas from the process is sent to the hydrogenerator in the Claus sulfur recovery unit. About 12,100 lb/hr of acid gas and 3,546 lb/hr of sour gas from the Rectisol process is also transported to the Claus sulfur recovery unit.

The laden methanol leaving the main stage of the H_2S absorber is fed to a flash regenerator for recovery of the bulk of the co-absorbed CO_2 as well as the CO and H_2 which are also co-absorbed in very small amounts. Tail gas from the Claus unit is also compressed and fed to the flash regenerator. The major portion of the gas that leaves the flash regenerator at a pressure of about 20 psia is compressed and added to the syngas from the H_2S absorber. A small amount of flashed gas is directed to the hydrogenation reactor in the Claus unit.

The methanol from the flash regenerator enters the hot regenerator for final regeneration by stripping with methanol vapor generated in a reboiler by means of low pressure steam. The acid gas leaving the top of the regenerator is cooled to recover methanol, which is recycled to the regenerator. The acid gas is then transported to the Claus unit for recovery of the sulfur in the gas. Hot regenerated methanol is pumped back to the H_2S absorber via a refrigeration cooler.

Water from the methanol stripper is directed to the waste water treatment system.

Approximately 136,100 lbs/hr of cooling water required for the approximate 2.45 MMBtu/hr cooling duty in the process is supplied by the circulating water system. About 14,800 lb/hr of low pressure (75 psia) steam and 120 lb/hr of medium pressure (300 psia) steam required for the process is supplied from the low pressure and medium pressure steam headers in the steam system. Refrigerant for cooling the various flow streams is supplied by a refrigeration system requiring about 2,483 kW of electrical power. Pumping and compressor power requirements for the Rectisol process total about 3,173 kWe.

X.7.2 CLAUS PROCESS DESCRIPTION

The Claus process recovers about 99% of sulfur from the acid gas and sour gas from the Rectisol, liquor separation, and waste water treatment processes in the form of elemental sulfur. Refer to the conceptual process flow diagram in Exhibit X.2-5 and the table in Exhibit X.2-14 for estimated state point compositions and conditions for the Claus system.

The Claus process consists of a Claus furnace and two catalytic stages. The oxidant to the Claus furnace is air enriched to about 30% oxygen by weight. The feed streams are first preheated using steam and then enter the Claus furnace where about 75% of the H_2S is reacted to SO_2. The exhaust is passed through a waste heat boiler to generate steam for the process, and the SO_2 and remaining H_2S in the exhaust is then reacted to sulfur and water in the catalytic stages. Tail gas from the process is hydrogenated and quenched in a water wash tower and then recycled to the flash regenerator in the Rectisol process. Blowdown from the process is sent to the waste water treatment system. Export steam is transported to the low pressure and high pressure steam headers, and condensate to the flash tank in the steam system. Sulfur product is condensed and collected in a sulfur pit for transport to a sulfur product storage area.

About 13,800lb/hr of intermediate pressure (840 psia, 240°F) boiler feed water for steam generation in the Claus process is provided from the deaerator in the steam system. About 294 lb/hr of oxygen is supplied from the ASU. Approximately 222,200 lb/hr of cooling water to provide about 4 MMBtu/hr of cooling duty in the Claus process is supplied by the circulating water system.

About 3,000 lb/hr of elemental sulfur byproduct is produced in the Claus system.

This page is intentionally left blank

X.8 METHANATION SYSTEM

Refer to the conceptual process flow diagram in Exhibit X.2-9, and the table in Exhibit X.2-18 for estimated state point composition and conditions for the methanation system.

The production of SNG requires the conversion or reaction of CO and H_2 to CH_4 and H_2O. This is referred to as methanation. There are a variety of commercially licensed methanation technologies available. The process configuration presented here is generic and is based on the recommendations of several catalyst vendors.

Approximately 65,100 lb/hr of CO_2-lean, shifted syngas from the Rectisol Unit is routed to a humidification Tower in order to raise the moisture level of the reaction gas. The humidification tower also raises the reaction gas temperature. Additional steam is added and the reaction gas stream is heated in a recuperative indirect heat exchanger. The humidification and steam addition is necessary in order to limit soot formation through Bouduard-type carbon reactions.

The reaction gas then passes through a sulfur guard bed of ZnO. The purpose of this bed is to protect the catalyst in the methanation reactors from upsets in the Rectisol Unit that would result in elevated sulfur levels in the Rectisol effluent. Under normal operating conditions it would only remove trace amounts of H_2S.

Effluent from the Sulfur Guard Bed is routed to the Primary Methanation Reactor. The temperature rise across this reactor is controlled by the introduction of cooled reaction gas recycled from the reactor effluent. The reactor itself is a tubular fixed-bed catalytic reactor. A large portion of the incoming CO is converted to CH_4.

The effluent is cooled first in a recuperative shell and tube heat exchanger and then further cooled in a Heat Recovery Steam Generator (HRSG) also referred to as a Waste Heat Boiler. Here, hot gas is cooled through the generation of steam. The saturated steam generated from the cooling process is routed to the combined cycle HRSG for superheating.

A large amount of the cooled reaction gas exiting the HRSG is recompressed and routed back to the Primary Methanation Reactor. The balance is directed to the Secondary Methanation Reactor. The Secondary Methanation Reactor converts the remaining CO to CH_4. The Secondary Methanation Reactor is also a fixed-bed catalytic unit that is cooled through steam generation. The saturated steam is routed to the HRSG superheater where it becomes part of the HRSG steam effluent stream.

Crude SNG gas from the Secondary Methanation Reactor is first cooled by heating water for the Humidification Tower and further cooled in a series of heat exchangers consisting of low-pressure steam generation, economizing of low pressure boiler feed water, and waste heat rejection to the cooling tower. This cooling process condenses out a sizable amount of water. The condensed water is utilized in the Humidification Tower. A portion of the condensed water is rejected to Waste Water Treatment in order to control the level of condensed gas species in the water loop. The SNG product stream is further dried in a triethylene glycol desiccation unit. Approximately 34,531 lb/hr of dried SNG meeting pipeline quality gas specifications is produced. A portion (22,086 lb/hr) is used as fuel in the two P&W FT8 combustion turbines. About 5,540 lb/hr is combined with tailgas from the Rectisol AGR system and is used as supplemental fuel in the combined cycle HRSGs. The remaining 6,905 lb/hr is available as SNG product export.

X.9 WASTE WATER TREATMENT SYSTEM DESCRIPTION

The waste water treatment system treats the waste water and gas liquor condensate from the processes prior to reusing the water for slag cooling and/or discharge to the environment. Refer to the conceptual process flow diagram in Exhibit X.2-6 and the table in Exhibit X.2-15 for estimated state point compositions and conditions for the waste water treatment system.

Waste water comes from the Rectisol unit (methanol stripper bottoms), Claus Unit (blowdown), methanation system, and waste heat exchanger steam drum blowdown. Gas liquor condensate comes from the gas liquor separation system.

Gas liquor is first introduced into an extraction column. Phenol containing condensate is sent to an MIBK stripper. Phenol from the stripper is recycled to the gasifier via the liquid products tank in the liquor separation system. Tail gas from the stripper is sent to a tail gas burner after it is cooled by cooling water to condense solvents that are recycled to the extraction column.

Dephenolated liquid from the extraction column is sent to a sour gas stripper. Sour gas from the stripper is sent to the Claus unit. Liquid from the stripper is sent to a surge tank, along with water from the Rectisol and Claus units, where calcium oxide (CaO) is added and then sent to a mixing tank where iron chloride ($FeCl_3$) is added to induce precipitation of solids. Solids (sludge) are then separated from the liquid, and the liquid is transported to a biological reactor for final cleanup. The gas from the biological reactor is vented, and the water is discharged in accordance with local regulations or reused in plant processes if it meets process specifications.

About 3,305 lb/hr of low pressure steam (75 psia) and 490 lb/hr of intermediate pressure steam are provided by the steam system for liquor heating and the MIBK stripper in the waste water treatment process. About 25,000 lb/hr of cooling water is supplied by the circulating water system for gas cooling in the process.

This page is intentionally left blank

X.10 PROCESS STEAM SYSTEM DESCRIPTION

The process steam system collects and distributes steam from and to various processes in the syngas production plant. Refer to the conceptual process flow diagram in Exhibit X.2-7 and the table in Exhibit X.2-16 for estimated state point compositions and conditions for the steam subsystem.

The system collects low pressure steam from the Claus unit (about 5,700 lb/hr), SNG coolers (about 68,750 lb/hr), and waste heat exchanger in the gasification process (about 17,610 lb/hr) in a low pressure steam header for distribution to the Rectisol, waste water treatment, and gas liquor separation systems. The system collects intermediate pressure steam from the Claus unit (1,057 lb/hr) in an intermediate steam header that distributes intermediate pressure steam to the MIBK stripper and steam stripper in the waste water treatment system, and the methanol heater in the Rectisol system. The subsystem also collects the condensate from these processes and the oxygen preheater, adds makeup water, deaerates it, and distributes it to the waste heat exchanger, and Claus unit.

This page is intentionally left blank

X.11 COMBUSTION TURBINE COMBINED CYCLE SYSTEM

X.11.1 COMBUSTION TURBINE/GENERATOR

The P&W FT-8 TwinPac was chosen for use in this study as it closely matched the SNG output from the BGL1000. A second, but no less important, reason, is that a survey of industrial equipment revealed that there are several FT-8s available at industrial complexes. It is this type of industrial application that is most suitable for the configuration presented here.

A conceptual process flow diagram of the combustion turbine system is shown in Exhibit X.2-10, and state point compositions and conditions for the flow streams in the system are shown in Exhibit X.2-19.

The FT-8 air compressor generates high pressure air that is utilized in both the gas turbine combustor as well as to cool the hot surfaces internal to the machine. SNG is fired in the gas turbine combustor. The FT-8 produces a net output of 50.3 MWe and has a turbine exhaust temperature of approximately 860°F.[e] The turbine exhaust is routed to the duct burner of the HRSG. A duct burner is used due to the comparatively low gas turbine outlet temperature.

X.11.2 HRSG

The Heat Recovery Steam Generator is used to recover waste heat rejected by the gas turbine. Energy from the waste heat is recovered through high-pressure steam generation. The steam generated in cooling the flue gas is utilized in a steam turbine generator to produce additional electrical energy.

---

[e] Performance estimate based on published information on the performance of the P&W FT8 TwinPac fired with natural gas and has not been verified by Pratt & Whitney for the specific reference plant SNG.

Hot flue gas from the gas turbine exhaust is routed to the duct burner section of the HRSG. In the duct burner, SNG and Rectisol tailgas is fired creating additional thermal energy. SNG is fired in the duct burner in order to enhance the amount of superheat energy available to steam production. The high efficiency of the FT8 aeroderivative gas turbine results in the gas turbine exhaust being lower in temperature than non-aeroderivative turbines, and thus, without supplemental firing of the HRSG would result in a lower steam superheat temperature and lower steam turbine cycle efficiency. The Rectisol tail gas is burned in the duct burner because it is unusable in the gas turbine or methanation process.

A conceptual process flow diagram for the steam turbine and HRSG is shown in Exhibit X.2-11, and process flow conditions are shown in the table in Exhibit X.2-20.

The HRSG generates high-pressure steam (850 psig/900°F) for expansion in a steam turbine and low-pressure steam (25 psia) used for deaeration. The HRSG also provides some energy for heating condensate. The cooled flue gas exits the HRSG at 255°F and is then directed to the plant chimney stack.

X.11.3 STEAM TURBINE/GENERATOR

The steam turbine used in this study configuration is a non-reheat unit with extraction steam capability. The exhaust empties into a condenser. The throttle conditions are 850 psig and 900°F. The condenser pressure is 1 psia (2” Hg). Extractions from the turbine provide steam for the gasifier, shift converters, methanation process and provide steam for the oxidant heaters.

X.12 FLARE SYSTEM DESCRIPTION

An elevated flare system provides for safe combustion of syngas during gasifier start-up and system upsets. On gasifier start-up, all syngas gas from the gasifier is sent to a gasifier start-up flare until the gasification process has been stabilized on coal. A knock-out vessel removes excess liquids and solids from the gas prior to the gas being introduced into the flare to prevent plugging of the flare system and to minimize emissions during the start-up period. After the gasifier operation is stabilized, the syngas is transported to the gas cleanup system. The syngas from the gas cleanup system is sent to a separate main flare until the syngas meets specifications for the syngas conversion systems and are producing fuel meeting the combustion turbine specifications, and the combustion turbine combined cycle system operation is stabilized and ready to be transferred to SNG operation. The syngas or SNG will also be sent to the flare system when the performance of any system treating or using the syngas or gas liquor becomes insufficient to continue safe operation of the system or meet SNG product quality specifications, or in the event of combustion turbine combined cycle trips, until the syngas production system can be shutdown. From an economic standpoint, it is necessary to keep flaring as short as possible. From the emissions point of view, the most important aspect of the stabilization process is to ensure that desulfurization of the syngas and recovery of sulfur take place as quickly as possible.

The flare is designed to handle the total quantity of syngas produced from the gasifier at 100% load. The height of the flare will be based on a radiant heat level not to exceed 500 Btu/hr/ft^2 at the base of the flare. For purposes of developing the conceptual layout, a flare height of 150 feet and a clear space radius of 75 ft. around the base of the flare were assumed to satisfy the requirements.

This page is intentionally left blank

X.13 CIRCULATING WATER SYSTEM DESCRIPTION

The circulating water system provides cooling water to the gasification process, syngas coolers, Rectisol system, Claus system, liquor separation system, waste water treatment system, and combustion turbine combined cycle system. The system consists of a plume-abated, wet-dry mechanical draft cooling tower, pumps, and piping required to remove heat from the cooling water, add makeup water, and distribute the water to the processes. The estimated circulating water requirements for the processes are shown in Exhibit X.13-1.

Exhibit X.13-1 Estimated Circulated Cooling Water Requirements

PROCESS	FLOW RATE	SUPPLY TEMPERATURE	RETURN TEMPERATURE
Gasification (incl. syngas coolers)	1,083,333 lb/hr	69°F	87°F
Rectisol	136,111 lb/hr	69°F	87°F
Claus	222,222 lb/hr	69°F	87°F
Water-Gas Shift	6,111,111 lb/hr	69°F	87°F
Methanation	1,277,780 lb/hr	69°F	87°F
Waste Water Treatment	25,000 lb/hr	69°F	87°F
Combustion Turbine Combined Cycle	14,843,610	69°F	87°F
Total	23,699,166 lb/hr		

This page is intentionally left blank

X.14 PROCESS WATER SUPPLY SYSTEM

The process water supply system provides demineralized makeup water to the AGR (Rectisol), steam, and circulating water systems. The discharge water from the waste water treatment system is more than sufficient for slag cooling; therefore, no makeup water is required for this function. The estimated process makeup water requirements are shown in Exhibit X.14-1. A detailed optimization study of water recycling in the plant was not performed. The estimates for makeup water required do take into account use of water from the waste water treatment system for slag quenching.

Exhibit X.14-1 Estimated Process Makeup Water Requirements

PROCESS	FLOW RATE
AGR (Rectisol) System	270 lb/hr
Steam System	135,890 lb/hr
Circulating Water System	353,097 lb/hr
Total	412,726 lb/hr

This page is intentionally left blank

X.15 INSTRUMENTATION AND CONTROL SYSTEM DESCRIPTION

The instrumentation and control system consists of the equipment required to control the SNG to power plant related processes in a safe and efficient manner. The plant systems will each be controlled by separate digital control systems (DCS) integrated with an overall plant DCS.

This page is intentionally left blank

X.16 ELECTRICAL SYSTEM DESCRIPTION

The electrical system consists of the equipment necessary to distribute electrical power to the end-user processes and receive and distribute power to the electrically driven components in the syngas/power plant and building support systems. It includes station service equipment, switchgear and motor control centers, conduit and cable trays, wire and cables, protective equipment (grounding, cathodic protection, etc.), and standby equipment. The anticipated total electrical power required for the SNG to power plant is 11,536 kWe. A breakdown of electrical power requirements for major systems is shown in Exhibit X.16-1.

Exhibit X.16-1 Estimated Electric Power Requirements Summary

SYSTEM	KWE
Gasification	600
Material Handling	208
Tail Gas Compressor	840
BFW Pumps	700
Circulating Water	1,189
Condensate Pump	100
Rectisol	5,656
Claus	186
Water-Gas Shift	75
Methanation	1132
Wastewater Treatment	450
Steam System	200
Combustion Turbine Combined Cycle	200
Total	11,536

This page is intentionally left blank

X.17 AIR SEPARATION UNIT DESCRIPTION

In this syngas production plant option, about 582 tons/day of 99.5% oxygen for the gasifier, slag tap burner, and Claus furnace at about 517 psia will be purchased across-the-fence from a gas supplier. The type of ASU will be selected by the gas supplier based on the oxygen and nitrogen requirements, and availability requirement, of the syngas production plant. Utilities for the ASU will be the responsibility of the gas supplier. It is anticipated that these utilities will include about 9,700 kWe of electric power and about 3,200 gpm of circulating water for cooling.

This page is intentionally left blank

X.18 CAPITAL AND O&M COST ESTIMATES

This section describes the approach and results of evaluating the expected cost of the SNG to Power Reference Plant.

X.18.1 COST ESTIMATING APPROACH

The approach to capital cost development is a combination of WorleyParsons estimates of selected specific major systems to supplement the costs from an in-house BGL gasifier cost model that develops capital costs for an entire IGCC power plant. The format includes separate evaluation of major systems and sub-systems for the entire plant. These costs are determined with several levels of complexity depending on the specific system being estimated. The capital cost at the level of Total Field Cost includes equipment, materials, and installation labor.

The resulting capital cost is provided on an estimate form that recognizes each cost account for the plant. Each account in the Reference Plant estimate contains separate costs for equipment, materials, and installation labor. These costs comprise the Total Field Cost (TFC), also referred to as the Bare Erected Cost (BEC). The Total Capital Cost consists of equipment and material costs, direct and indirect labor costs, engineering costs, other costs and contingencies for the total SNG to Power project. The estimate does not include escalation, financing costs or any additional costs that would be the responsibility of the plant owner. The model helps assure that plant estimates are consistently evaluated and that all relevant process scope is included. When more than one case is evaluated, this approach produces costs that indicate normalized and unbiased results that reflect generic differences.

The cost of plant operating and maintenance is included for the Reference Plant. These costs were developed on an average annual cost basis. This operating and maintenance cost estimate includes the following:

- Fuel cost

- Fixed Operating Cost
  - Operating labor
  - Maintenance labor and Material
  - Administrative and support labor
- Variable, non-fuel operating costs
  - Consumables
  - Waste disposal
- Other operating costs (By-Products)

X.18.2 COST BASIS AND ASSUMPTIONS

X.18.2.1 Capital Cost Basis and Assumptions

The following are the basis for the capital costs:

- Construction performed by Gulf Coast non-union labor.
- Coal will be delivered to the site by truck.
- A separate unloading facility is included for the limestone (flux) supply.
- Slag waste will be trucked to an unspecified off-site disposal area.
- Cost estimate scope is based on study performance summary, heat and material balance data, conceptual site arrangement, and system design descriptions presented in previous sections.
- Cost estimate is in constant June 2005 dollars.
- Estimate for coal and limestone handling systems is based on an in-house conceptual estimate of plant specific material handling scope. The cost does include vendor furnished budgetary costs for over 80% of the equipment cost.
- The estimates for the gas cleanup system, water-gas shift system, methanation system, waste water treatment system, and the combustion turbine combined cycle system were prepared by WorleyParsons. These estimates were developed on the basis of engineering defined equipment lists that defined each of the major components for each system. The costs are based on a US Gulf Coast basis.
- The estimate for the gasifier system is based on WorleyParsons' in-house BGL IGCC cost model utilized for previous IGCC

evaluations, and includes the cost of a spare gasifier with feed lock, gas water wash vessel, slag quench vessel, and slag lock.

- Model costs are adjusted to the common June 2005 basis using Chemical Engineering Indices. Indices generally reflect the recent actual increases in steel price. However, the steel commodity prices are very volatile and significant changes occur on a monthly basis. Depending on the perceived long-term impact of these changes, special consideration of the impact is necessary.
- Construction of the project is based on the owner purchasing equipment, retaining the services of an engineering/design/construction manager firm and executing construction with multiple contracts.
- Construction cost is based on a 40 hour workweek with spot overtime.
- Equipment costs are based on use of United States equipment vendors.
- Contingency was evaluated with varying rates for each estimate line item depending on the risk for cost growth. The resulting contingency rate for each estimate is the weighted composite value.
- Estimate includes the following:
    - SNG production and combined cycle plant battery limits
    - All identified process equipment necessary for the production of syngas, SNG, and electric power.
    - Wet/Dry cooling tower and circulating water system
    - Auxiliary transformer, switchgear and MCC's to support the plant auxiliary power load
    - DCS system for plant control
    - Miscellaneous systems and equipment necessary to support the major process systems
    - Site development and buildings
    - Professional services for the engineering & design of the balance of plant.
    - Professional services for construction management of the plant.

- Professional services and craft labor in support of plant startup but not the costs of owner's plant startup.
- An allowance for startup spare parts but not the cost of initial spare part inventory.
- An allowance for Builders Risk and General Liability Insurance

♦ Estimates do not include the following:

- Capital cost for the air separation unit (the facility is considered to be off-site and the cost of oxygen and nitrogen are recognized in the annual O&M cost estimate and include the impact of utility costs).
- Sales tax
- Escalation
- Owners costs such as for licenses, permits, land, etc.

X.18.2.2 Operating and Maintenance Cost Basis and Assumptions

Annual Operating and Maintenance (O&M) costs are based on and include the following:

♦ O&M estimate is the average annual cost.

♦ Evaluation Annual Plant Capacity factor is 92%.

♦ Cost of fuel is included.

♦ Average operator labor rate is $32.00

♦ Operator labor burden is 30% of base labor, and Overhead charge is 25% of all plant labor.

♦ Average annual maintenance material and labor

♦ Consumables costs are based on the expected full load consumption (resulting costs are adjusted for the stated plant capacity factor) and corresponding unit costs for the following:

- Water Makeup
- Water Treatment Chemicals
- Flux (limestone)
- Oxygen
- Methanol

- Natural Gas
- Nitrogen
- Waste Disposal
- Sulfur By-Product Credit
- SNG By-Product Credit

♦ The cost of electricity for the ASU plant is included in the purchase cost of the oxygen. Therefore, the auxiliary power requirement of the ASU is not deducted from the net combined cycle power generation.

X.18.2.3 Results

X.18.2.3.1 Total Indicative Price

A summary of the capital cost estimate is shown in Exhibit X.18-1. The total capital cost of the SNG to Power Reference Plant is estimated to be $215.4 million, about $2,800/kWe net product power. The estimated capital cost does not include financing, escalation, or owner's costs, as noted in the capital cost basis and assumptions in X.18.2.1.

X.18.2.3.2 Annual Operating and Maintenance Costs

The estimated annual operating costs, excluding annualized capital costs, are summarized in Exhibit X.18-2. The annual fixed operating costs are estimated to be about $8.3 million, or about $107.30/kWe net product electric power. The annual non-fuel variable operating costs are estimated to total about $3.1 million (about $.005/kWh of electric product energy based on a plant capacity factor of 92%) after credit is taken for the value of the SNG product at an assumed unit value of $7/MMBtu, the same value assumed for the price of purchased natural gas. The annual fuel operating cost is estimated to be $12.7 million, or about $0.02/kWh net electric product energy. The total annual variable operating cost, including fuel cost, is thus estimated to be about $0.025/kWh net electric product energy.

Exhibit X.18-1 Summary of Capital Cost Estimate

INDICATIVE PRICING

CLIENT: DOE
PROJECT: Industrial Size Gasification
CASE: BGL 1000 SNG w/ Power, Tar Recycle & Spare-III#6

7/7/2006 Cost Base (Jun.) 2005

Prepared by: G. Hinds Checked by:L. L. Pinkerton

CODE	ITEM		EQUIPMENT	MATERIAL	LABOR	TOTAL	COMMENTS
							77,000 kW-net
1.0	Coal & Sorbent Handling		$ 913,985	$ 111,057	$ 404,090	$ 1,429,132	Coal & Flux Receiving & Reclaim
2.0	Coal & Sorbent Prep & Feed		$ 1,628,788	$ 128,284	$ 600,765	$ 2,357,837	Coal & Flux Storage & Feed to Gasifier
3.0	Misc. BOP Systems		$ 821,093	$ 473,326	$ 549,621	$ 1,844,039	
4.0	Gasifier & Accessories		$ 18,132,336	$ 642,216	$ 11,367,299	$ 30,141,850	Gasifier, Gas Cooling, Slag Quench, Tar Separation
4.0	ASU Plant		$ -	$ -	$ -	$ -	Off-Site (see O&M)
5.0	Gas Cleanup		$ 27,955,630	$ 10,823,257	$ 16,078,157	$ 54,857,045	Rectisol, Claus, Gas Liquor Treating & Methanation
5.0	CO2 Removal & Compression		$ -	$ -	$ -	$ -	
6.0	Combustion Turbine Plant		$ 36,648,000	$ 6,190,124	$ 10,600,876	$ 53,439,000	
7.0	HRSG, Ducting & Stack		$ -	$ -	$ -	$ -	Inculded in Combustion Turbine Plant
8.0	Steam Turbine Generator		$ -	$ 186,871	$ 113,187	$ 300,058	Steam Piping System
9.0	Cooling Water System		$ 1,538,647	$ 950,136	$ 783,482	$ 3,272,266	Cooling Tower Cooling & Component Cooling
10.0	Ash Handling System		$ 804,136	$ 294,871	$ 312,194	$ 1,411,202	Slag Conveyor & Truck Feed
11.0	Accessory Electric Plant		$ 2,167,816	$ 1,043,701	$ 2,002,151	$ 5,213,669	
12.0	Instrumentation & Control		$ 2,445,502	$ 276,391	$ 951,747	$ 3,673,640	
13.0	Improvements to Site		$ 217,145	$ 255,977	$ 568,091	$ 1,041,213	
14.0	Buildings & Structures		$ -	$ 983,697	$ 628,015	$ 1,611,712	
	TOTAL FIELD COST		$ 93,273,078	$ 22,359,908	$ 44,959,677	$ 160,592,662	
	PROFESSIONAL SERVICES:		$ 16,059,300	$ -	$ -	$ 16,059,300	Includes Engineering, Design & CM
	OTHER COSTS (LESS Escalation)		$ 8,700,000	$ -	$ 500,000	$ 9,200,000	Freight, Heavy Haul, Startup Spares & Insurances
	ESCALATION		$ -	$ -	$ -	$ -	Excluded
							$/kW-net
	TOTAL (w/o CONTINGENCY)		$ 118,032,378	$ 22,359,908	$ 45,459,677	$ 185,851,962	2,410
	CONTINGENCY					$ 29,589,037	
							$/kW-net
	TOTAL					$ 215,440,999	2,800

Exhibit X.18-2 Estimated Annual O&M Costs

INITIAL & ANNUAL O&M EXPENSES

BGL 1000 SNG w/ Power, Tar Recycle & Spare-III#6				Cost Base (Jun.)	2005
				Heat Rate-net(Btu/kWh):	
Plant Output:	SNG (MMBtu/hr)	Hydrogen (MMBtu/hr)	0	MWe-net:	77.2
				Capacity Factor: (%):	92

OPERATING & MAINTENANCE LABOR

Operating Labor		
Operating Labor Rate(base):	32.00	$/hour
Operating Labor Burden:	30.00	% of base
Labor O-H Charge Rate:	25.00	% of labor

Operating Labor Requirements(O.J.)per Shift:	1 unit/mod.	Total Plant
Skilled Operator	2.0	2.0
Operator	9.0	9.0
Foreman	1.0	1.0
Lab Tech's, etc.	1.0	1.0
TOTAL-O.J.'s	13.0	13.0

	Annual Cost $	Annual Unit Cost $/kW-net
Annual Operating Labor Cost	$4,737,408	61.365
Maintenance Labor Cost	$1,889,547	24.476
Administrative & Support Labor	$1,656,739	21.460
TOTAL FIXED OPERATING COSTS	**$8,283,694**	**107.302**

VARIABLE OPERATING COSTS

		$/kWh-net
Maintenance Material Cost	$3,669,306	0.005

Consumables	Consumption Initial	Consumption /Day	Unit Cost	Initial Cost		
Water(/1000 gallons)		1,188	0.43		$171,207	0.000
Chemicals						
MU & WT Chem.(lb.)	106,166	3,539	0.16	$16,533	$185,055	0.000
Carbon (Mercury Removal) (lb.)			6.50			
COS Catalyst (lb)			0.60			
Water Gas Shift Catalysts	400	0.5	475.00	$190,000	$87,340	0.000
SNG Catalysts	740	0.7	570.00	$421,800	$129,263	0.000
Flux (limestone-ton)	879	29.3	20.00	$17,582	$196,806	0.000
O2 (ton)		583.5	34.50		$6,759,628	0.011
Methanol (ton)	18	0.6	282.00	$5,076	$56,817	0.000
Subtotal Chemicals				$650,991	$7,414,910	0.012
Other						
Supplemental Fuel(mmBtu)		75.4	7.00		$177,279	0.000
Auxiliary Power (MW/hr)			40.00			
Subtotal Other					$177,279	0.000
Subtotal-Other						
Waste Disposal						
Spent Mercury Catalyst (lb.)			0.25			
Flyash (ton)						
Bottom Ash/Slag (ton)		165.4	16.00		$888,898	0.001
Subtotal-Waste Disposal					$888,898	0.001
By-products & Emissions						
Sulfur(tons)		35.3	25.00		($296,579)	0.000
SNG (mmBtu)		3,804.0	7.00		($8,941,682)	-0.014
Subtotal By-Products					($9,238,261)	-0.015
TOTAL VARIABLE OPERATING COSTS					**$3,083,337**	**0.005**
Fuel(ton)	34,347	1,145	33.00	$1,133,458	**$12,687,174**	**0.020**

This page is intentionally left blank

X.19 CONCLUSION

A conceptual design and cost estimate of an SNG to Power Reference Plant using a single operating BGL 1000 Gasifier with one spare gasifier were developed. The syngas cleanup system consists of a Rectisol process for removal of sulfur and other contaminants from the syngas and a Claus process for converting H_2S in the syngas to elemental sulfur. A sour water-gas shift reaction system converts CO in the syngas to H_2 to provide the appropriate hydrogen to carbon ratio for production of SNG in a methanation system. A combustion turbine combined cycle uses the major portion of the SNG as fuel for the production of electrical power, while a smaller portion of SNG is available for sale as a product. The estimated performance characteristics of the plant are as follows:

- Coal Consumption: 95,409 lb/hr
- Coal Thermal Input (HHV): 1,118 MMBtu/hr
- Limestone Consumption: 2,442 lb/hr
- Oxygen Consumption: 48,503 lb/hr
- Net Electric Power Generated: 77,164 kWe
- Exported SNG Product: 6,905 lb/hr (0.16 million scf/hr)
  159 MMBtu/hr
- SNG Higher Heating Value: 22,956 Btu/lb (985 Btu/scf)
- SNG Lower Heating Value: 20,670 Btu/lb (885 Btu/scf)
- Elemental Sulfur Co-product: 2,850 lb/hr
- Slag Production: 13,787 lb/hr
- Net Combined Fuel and Power Plant Thermal Efficiency: 34.6%

The study was based on purchase of oxygen from a gas supplier who owns and operates an ASU on-site. The gas supplier is responsible for utilities for the ASU, and the cost of oxygen used in the cost evaluation includes the ASU cost of electricity. For the capacity required for the syngas production plant, the electric power

consumption of the ASU is estimated by a supplier to be about 9,700 kWe.

The capital cost of the SNG to Power Reference plant is estimated to total about $214.4 million in June 2005 dollars, about $2,800/kWe net electric power product, including professional services and contingency but not owner's costs. The annual fixed O&M cost is estimated to be about $8.3 million ($107.30/kWe net electric power). The annual variable O&M cost is estimated to total about $15.6 million, about $0.025/kWh net product energy, based on a plant power generation annual capacity factor of 92%, after credit is taken for the value of the SNG product. If the SNG demand of the industrial customer is greater than the nominal output of the gasification/power plant, then when the power island is not operational, the SNG production plant could continue operation and supply additional SNG to the customer. Likewise, if the ability to put the SNG in a local pipeline for distribution over a large area is provided for, then when the power island is down, the SNG production plant could continue operation and put the SNG product in the pipeline. This would decrease the annual operating costs per unit of energy production since the capacity factor of the SNG production plant is estimated to be about 95% versus the combined SNG production and power generation plant capacity factor of about 92%.

X.20 MAJOR EQUIPMENT LIST

X.20.1 GASIFIER PROCESS PACKAGE

Coal / Limestone Feed Lock
Quantity 2
Carbon Steel
Nominal vessel diameter: 8 ft.
Nominal vessel height: 16 ft.
Nominal pressure: 500 psia

Gasifier
Quantity 2
Carbon Steel, Jacketed Shell
Nominal shell diameter: 14 ft.
Nominal height: 44 ft.
Nominal pressure: 500 psia
Refractory
Oxygen/Steam Injector
Tar/oil injector

Slag Quench Vessel
Quantity 2
Carbon Steel Vessel
Nominal vessel diameter: 12 ft.
Nominal vessel height: 17 ft.
Nominal pressure: 500 psia

Slag Lock
Quantity 2
Carbon Steel Vessel
Nominal vessel diameter: 9 ft.
Nominal vessel height: 14 ft.
Nominal pressure: 500 psia

Wash Cooler
Quantity 2
Nominal diameter: 6 ft.
Nominal height: 20 ft.

Waste Heat Exchanger (Primary HX)
Quantity 1
Nominal pressure: 500 psia
Temperature: 300°F – 400°F
Outlet steam pressure: 75 psia
Outlet steam temperature: 308°F
Duty: 0.17 MMBtu/hr

Syngas Cooling System
Quantity 1
Shell and tube (gas tubeside)
Nominal pressure: 340 psia
Temperature: 95°F – 315°F
- Syngas Cooler 1
- Syngas Cooler 2
- Syngas Cooler 3

Liquor Separation and Tar Recycle System
Quantity 1
- Liquor Coolers
- Tar Separator
- Condensate Separator
- Liquid Products Tank

X.20.2 WASTE WATER TREATMENT SYSTEM

Towers

Solvent Extraction Column

Type	Agitated column
Quantity	1
Diameter	3 ft, 6 inch
Height	30 ft
Number of Trays	20
Pressure	30 psia
Temperature	150 F
Materials of Construction	316 Stainless

Solvent Recovery Column

Type	Packed column
Quantity	1
Diameter	2 ft, 4 inch
Height	30 ft
Number of Trays	15
Pressure	30 psia
Temperature	500 F
Materials of Construction	316 Stainless

Sour Gas Scrubber

Type	Packed column
Quantity	1
Diameter	2 ft, 10 inch
Height	30 ft
Number of Trays	15
Pressure	50 psia
Temperature	300 F
Materials of Construction	316 Stainless

Process Reactors

Biological Reactor

Type	Vertical
Quantity	1
Diameter	50 ft
Height	28 ft
Pressure	15 psia
Temperature	100 F
Materials of Construction	Rubber-lined carbon steel

Tanks

Clean Solvent Storage Tank

Type	Horizontal
Quantity	1
Diameter	3 ft
Length	9 ft
Pressure	20 psia
Temperature	200 F
Materials of Construction	Carbon Steel

Caustic Storage Drum

Type	Horizontal
Quantity	1
Diameter	4 ft
Length	12 ft
Pressure	20 psia
Temperature	100 F
Materials of Construction	Carbon Steel

Wastewater Surge Drum

Type	Horizontal
Quantity	1
Diameter	10 ft
Length	10 ft
Pressure	20 psia
Temperature	100 F
Materials of Construction	Rubber-lined Carbon Steel

Heat Exchangers

Solvent Column Reboiler

Type	Shell and tube
Quantity	1
Fluid (Hot/Cold)	MP Steam / Column Bottoms
Duty	0.41 MMBtu/hr
Area	61 ft2
Pressure	30 psia
Temperature	500 F
Materials of Construction	Carbon Steel

Solvent Column Condenser

Type	Shell and Tube
Quantity	1
Fluid (Hot/Cold)	Column Overheads / Cooling Water
Duty	0.27 MMBtu/hr
Area	42 ft2
Pressure	30 psia
Temperature	400 F
Materials of Construction	316 Stainless

Sour Gas Column Reboiler

Type	Shell and Tube
Quantity	1
Fluid (Hot/Cold)	LP Steam / Column Bottoms
Duty	0.7 MMBtu/hr
Area	269 ft2
Pressure	50 psia
Temperature	400 F
Materials of Construction	Carbon Steel

Sour Gas Column Condenser

Type	Shell and Tube
Quantity	1
Fluid (Hot/Cold)	Column Overheads / Cooling Water
Duty	0.1 MMBtu/hr
Area	17 ft2
Pressure	50 psia
Temperature	300 F
Materials of Construction	316 Stainless

Compressors

Air Compressor

Type	Centrifugal
Quantity	1
Fluid	Air
Work	70 hp
Pressure Rise	5 psi
Outlet Pressure	20 psia
Temperature	200 F
Materials of Construction	Carbon Steel

Miscellaneous

Water Clarifier

Quantity	1 operating
Fluid	10% TSS Water @ 30 gpm
Temperature	100 F

X.20.3 RECTISOL SYSTEM

Towers

Rectisol Absorber

Type	Tray column
Quantity	1
Diameter	9 ft
Height	100 ft
Number of Trays	50
Pressure	330 psia
Temperature	-60 to 10 F
Materials of Construction	316 Stainless

Flash Regenerator

Type	Tray column
Quantity	1
Diameter	6 ft, 6 inch
Height	45 ft
Number of Trays	23
Pressure	330 psia
Temperature	-35 to 50 F
Materials of Construction	316 Internals, Carbon Steel

Hot Regenerator

Type	Tray column
Quantity	1
Diameter	8 ft
Height	39 ft
Number of Ideal Stages	18
Pressure	50 psia
Temperature	100-500 F
Materials of Construction	316 Stainless

Methanol Stripper

Type	Packed column
Quantity	1
Diameter	3 ft, 6 inches
Height	25 ft
Number of Ideal Stages	20
Pressure	80 psia
Temperature	300 F
Materials of Construction	Carbon steel shell
Packing Material	1 inch ceramic Raschig rings

Package Units

Refrigeration System

Refrigerant	Propylene
Quantity	1
Duty	11 MMBtu/hr (910 ton)

Tanks

Pre-wash Flash Tank

Type	Vertical
Quantity	1
Diameter	1 ft, 6 inch
Total Vessel Height	5 ft
Liquid Level Height	2 ft
Pressure	50 psia
Temperature	100 F
Materials of Construction	Carbon Steel

BTX Overflow Decanter

Type	Horizontal, Skimmer Weir
Quantity	1
Height	2 ft
Length	4 ft
Width	2 ft
Pressure	20 psia
Temperature	50 F
Materials of Construction	Carbon Steel

Heat Exchangers

Feed Gas Cooler

Type	Shell and Tube
Quantity	1
Fluid (Hot/Cold)	Raw Syngas / Treated Syngas
Duty	11 MMBtu/hr
Area	38,824 ft2
Pressure	400 psia
Temperature	-20 to 100 F
Materials of Construction	Carbon Steel

Treated Gas Exchanger

Type	Shell and Tube
Quantity	1
Fluid (Hot/Cold)	Absorber Bottoms / Treated Syngas
Duty	2.4 MMBtu/hr
Area	3,644 ft2
Pressure	400 psia
Temperature	-60 to 0 F
Materials of Construction	316 Stainless

Inter-stage Wash Cooler

Type	Shell and Tube
Quantity	1
Fluid (Hot/Cold)	Methanol / Propylene
Duty	4.3 MMBtu/hr
Area	3,222 ft2
Pressure	400 psia
Temperature	-60 F
Materials of Construction	316 Stainless

Lean Methanol Cooler

Type	Shell and Tube
Quantity	1
Fluid (Hot/Cold)	Methanol / Propylene
Duty	17.5 MMBtu/hr
Area	4,680 ft2
Pressure	400 psia
Temperature	-60 F
Materials of Construction	316 Stainless

Heat Exchangers (continued)

Hot Regenerator Overheads Condenser

Type	Shell and Tube
Quantity	1
Fluid (Hot/Cold)	Overheads / Cooling Water
Duty	0.9 MMBtu/hr
Area	436 ft2
Pressure	100 psia
Temperature	100 F
Materials of Construction	316 Stainless

Hot Regenerator Reboiler

Type	Shell and Tube
Quantity	1
Fluid (Hot/Cold)	LP Steam / Hot Regenerator Bottoms
Duty	5.3 MMBtu/hr
Area	785 ft2
Pressure	200 psia
Temperature	300 F
Materials of Construction	Carbon Steel

Methanol Stripper Feed Heater

Type	Shell and Tube
Quantity	1
Fluid (Hot/Cold)	LP Steam / Column Feed
Duty	0.1 MMBtu/hr
Area	3 ft2
Pressure	100 psia
Temperature	200 F
Materials of Construction	Carbon Steel

Methanol Stripper Overheads Condenser

Type	Shell and Tube
Quantity	1
Fluid (Hot/Cold)	Overheads / Cooling Water
Duty	2.2 MMBtu/hr
Area	200 ft2
Pressure	100 psia
Temperature	200 F
Materials of Construction	Carbon Steel

Heat Exchangers (continued)

Methanol Stripper Reboiler

Type	Shell and Tube
Quantity	1
Fluid (Hot/Cold)	LP Steam / Column Bottoms
Duty	2.4 MMBtu/hr
Area	623 ft2
Pressure	100 psia
Temperature	300 F
Materials of Construction	Carbon Steel

Tail Gas Exchanger

Type	Shell and Tube
Quantity	1
Fluid (Hot/Cold)	Absorber Bottoms / Tail Gas
Duty	5.4 MMBtu/hr
Area	6,970 ft2
Pressure	100 psia
Temperature	300 F
Materials of Construction	316 Stainless

Pumps

Lean Methanol Pump

Type	Centrifugal
Quantity	1 operating / 1 spare
Fluid	Methanol @ 900 gpm
Work	200 hp
Pressure Rise	200 psi
Outlet Pressure	350 psia
Temperature	300 F
Materials of Construction	316 clad on Carbon Steel

Rich Methanol Pump

Type	Centrifugal
Quantity	1 operating / 1 spare
Fluid	Methanol @ 980 gpm
Work	100 hp
Pressure Rise	100 psi
Outlet Pressure	250 psia
Temperature	100 F
Materials of Construction	316 clad on Carbon Steel

Hot Regenerator Bottoms Pump

Type	Centrifugal
Quantity	1 operating / 1 spare
Fluid	Methanol @ 50 gpm
Work	30 hp
Pressure Rise	23 psi
Outlet Pressure	50 psia
Temperature	120 F
Materials of Construction	Carbon Steel

BTX Bottoms Pump

Type	Centrifugal
Quantity	1 operating / 1 spare
Fluid	Methanol @ 10 gpm
Work	20 hp
Pressure Rise	30 psi
Outlet Pressure	80 psia
Temperature	100 F
Materials of Construction	Carbon Steel

Pumps (continued)

Methanol Stripper Pump

Type	Centrifugal
Quantity	1 operating / 1 spare
Fluid	Methanol @ 30 gpm
Work	10 hp
Pressure Rise	5 psi
Outlet Pressure	40 psia
Temperature	150 F
Materials of Construction	Carbon Steel

Methanol Stripper Bottoms Pump

Type	Centrifugal
Quantity	1 operating / 1 spare
Fluid	Methanol @ 30 gpm
Work	10 hp
Pressure Rise	5 psi
Outlet Pressure	40 psia
Temperature	150 F
Materials of Construction	Carbon Steel

Pumps (continued)

Methanol Stripper Pump

Type	Centrifugal
Quantity	1 operating / 1 spare
Fluid	Methanol @ 30 gpm
Work	10 hp
Pressure Rise	5 psi
Outlet Pressure	40 psia
Temperature	150 F
Materials of Construction	Carbon Steel

Methanol Stripper Bottoms Pump

Type	Centrifugal
Quantity	1 operating / 1 spare
Fluid	Methanol @ 30 gpm
Work	10 hp
Pressure Rise	5 psi
Outlet Pressure	40 psia
Temperature	150 F
Materials of Construction	Carbon Steel

X.20.4 CLAUS SYSTEM

Towers

Water Wash Tower

Type	Tray column
Quantity	1
Diameter	4 ft, 6 inch
Height	40 ft
Number of Trays	15
Pressure	30 psia
Temperature	150 F
Materials of Construction	316 Stainless

Process Reactors

Claus Furnace

Type	Horizontal
Quantity	1
Diameter	5 ft
Height	15 ft
Pressure	50 psia
Temperature	2,500 F
Catalyst Volume	N/A
Catalyst Life	None
Materials of Construction	Refractory-lined carbon steel

Claus Sulfur Converter No. 1

Type	Fixed-bed
Quantity	1
Diameter	5 ft, 2 inch
Height	15 ft
Pressure	30 psia
Temperature	600 F
Catalyst Volume	240 ft3
Catalyst Life	1 year
Materials of Construction	Carbon Steel

Claus Sulfur Converter No. 2

Type	Fixed-bed
Quantity	1
Diameter	5 ft, 2 inch
Height	15 ft
Pressure	30 psia
Temperature	600 F
Catalyst Volume	240 ft3
Catalyst Life	1 year
Materials of Construction	Carbon Steel

Hydrogenation Reactor

Type	Fixed-bed
Quantity	1
Diameter	4 ft, 6 inch
Height	14 ft
Pressure	30 psia
Temperature	600 F
Catalyst Volume	130 ft3
Catalyst Life	1 year
Materials of Construction	Carbon Steel

Tanks

Medium Pressure Steam Drum

Type	Horizontal
Quantity	1
Diameter	8 ft
Length	24 ft
Pressure	700 psia
Temperature	500 F
Materials of Construction	Carbon Steel

Low Pressure Steam Drum

Type	Horizontal
Quantity	1
Diameter	4 ft
Length	12 ft
Pressure	120 psia
Temperature	500 F
Materials of Construction	Carbon Steel

Sulfur Storage Pit

Type	In-ground pit
Quantity	1
Height	10 ft
Length	12 ft
Width	7 ft
Pressure	15 psia
Temperature	300 F
Materials of Construction	Concrete, epoxy lined

Sulfur Storage Tank

Type	Vertical
Quantity	1
Diameter	40 ft
Height	42 ft
Pressure	20 psia
Temperature	500 F
Materials of Construction	Carbon Steel, epoxy lined

Heat Exchangers

Waste Heat Boiler

Type	Fired Tube
Quantity	1
Fluid (Hot/Cold)	Claus gas / MP Steam
Duty	8.5 MMBtu/hr
Area	652 ft2
Pressure	600 psia
Temperature	1,600 F
Materials of Construction	Stainless Steel

Acid Gas Heater

Type	Shell and Tube
Quantity	1
Fluid (Hot/Cold)	MP Steam / Acid Gas
Duty	1.71 MMBtu/hr
Area	520 ft2
Pressure	600 psia
Temperature	600 F
Materials of Construction	316 Stainless

Oxidant Heater

Type	Shell and Tube
Quantity	1
Fluid (Hot/Cold)	MP Steam / Air
Duty	0.35 MMBtu/hr
Area	143 ft2
Pressure	600 psia
Temperature	600 F
Materials of Construction	Carbon Steel

Sour Gas Heater

Type	Shell and Tube
Quantity	1
Fluid (Hot/Cold)	MP Steam / Sour Gas
Duty	0.6 MMBtu/hr
Area	30 ft2
Pressure	600 psia
Temperature	600 F
Materials of Construction	316 Stainless

Heat Exchangers (continued)

Claus Reactor No. 1 Preheater

Type	Shell and Tube
Quantity	1
Fluid (Hot/Cold)	MP Steam / Claus Gas
Duty	0.51 MMBtu/hr
Area	321 ft2
Pressure	600 psia
Temperature	600 F
Materials of Construction	Carbon Steel

Claus Reactor No. 2 Preheater

Type	Shell and Tube
Quantity	1
Fluid (Hot/Cold)	MP Steam / Claus Gas
Duty	0.54 MMBtu/hr
Area	207 ft2
Pressure	600 psia
Temperature	600 F
Materials of Construction	Carbon Steel

Hydrogenation Reactor Preheater

Type	Shell and Tube
Quantity	1
Fluid (Hot/Cold)	MP Steam / Claus Tail Gas
Duty	1.01 MMBtu/hr
Area	458 ft2
Pressure	600 psia
Temperature	600 F
Materials of Construction	Carbon Steel

Hydrogenation Reactor Cooler

Type	Shell and Tube
Quantity	1
Fluid (Hot/Cold)	Claus Tail Gas / LP Steam
Duty	0.75 MMBtu/hr
Area	314 ft2
Pressure	100 psia
Temperature	400 F
Materials of Construction	Carbon Steel

Heat Exchangers (continued)

Sulfur Condenser No. 1

Type	Shell and Tube
Quantity	1
Fluid (Hot/Cold)	Claus Gas-Sulfur / LP Steam
Duty	2.1 MMBtu/hr
Area	633 ft2
Pressure	100 psia
Temperature	400 F
Materials of Construction	316

Sulfur Condenser No. 2

Type	Shell and Tube
Quantity	1
Fluid (Hot/Cold)	Claus Gas-Sulfur / LP Steam
Duty	1.3 MMBtu/hr
Area	833 ft2
Pressure	100 psia
Temperature	400 F
Materials of Construction	316

Sulfur Condenser No. 3

Type	Shell and Tube
Quantity	1
Fluid (Hot/Cold)	Claus Gas-Sulfur / LP Steam
Duty	0.9 MMBtu/hr
Area	579 ft2
Pressure	100 psia
Temperature	400 F
Materials of Construction	316

Sulfur Storage Heater

Type	Bayonet
Quantity	1
Fluid (Hot/Cold)	MP Steam / Molten Sulfur
Duty	10 MMBtu/hr
Area	500 ft2
Pressure	600 psia
Temperature	400 F
Materials of Construction	316

Heat Exchangers (continued)

Oxidant Heater

Type	Shell and Tube
Quantity	1
Fluid (Hot/Cold)	MP Steam / Oxygen
Duty	0.1 MMBtu/hr
Area	20 ft2
Pressure	100 psia
Temperature	450 F
Materials of Construction	316 Stainless

Compressors

Air Compressor

Type	Centrifugal
Quantity	1
Fluid	Air
Work	130 hp
Pressure Rise	20 psi
Outlet Pressure	35 psia
Temperature	300 F
Materials of Construction	Carbon Steel

Tail Gas Compressor

Type	Centrifugal
Quantity	1
Fluid	Claus Tail Gas
Work	90 hp
Pressure Rise	10 psi
Outlet Pressure	35 psia
Temperature	300 F
Materials of Construction	Carbon Steel

Pumps

Medium Pressure BFW Pump

Type	Centrifugal
Quantity	1 operating / 1 spare
Fluid	Water @ 150 gpm
Work	100 hp
Pressure Rise	30 psi
Outlet Pressure	700 psia
Temperature	600 F
Materials of Construction	Carbon Steel

Low Pressure BFW Pump

Type	Centrifugal
Quantity	1 operating / 1 spare
Fluid	Water @ 100 gpm
Work	50 hp
Pressure Rise	30 psi
Outlet Pressure	100 psia
Temperature	400 F
Materials of Construction	Carbon Steel

Wash Water Tower Pump

Type	Centrifugal
Quantity	1 operating / 1 spare
Fluid	Water @ 500 gpm
Work	30 hp
Pressure Rise	10 psi
Outlet Pressure	30 psia
Temperature	120 F
Materials of Construction	Carbon Steel

Sulfur Pump

Type	Centrifugal
Quantity	1 operating / 1 spare
Fluid	Molten Sulfur @ 50 gpm
Work	20 hp
Pressure Rise	5 psi
Outlet Pressure	20 psia
Temperature	400 F
Materials of Construction	316 Stainless Steel

Skids

Molten Sulfur Truck Loading Skid

Quantity	1 operating
Fluid	Molten Sulfur @ 200 gpm
Temperature	300 F

X.20.5 WATER-GAS SHIFT

Towers

Humidification Tower

Type	Tray Column
Quantity	1
Diameter	7 ft, 6 inch
Height	40 ft
Number of Trays	30
Pressure	300 psia
Temperature	400 F
Materials of Construction	316 Stainless Internals, Carbon Steel Shell

De-Saturator

Type	Tray Column
Quantity	1
Diameter	8 ft, 6 inch
Height	45 ft
Number of Trays	32
Pressure	300 psia
Temperature	400 F
Materials of Construction	316 Stainless Internals, Carbon Steel Shell

Process Reactors

Sour Shift Guard Bed

Type	Fixed-bed
Quantity	1
Diameter	4 ft, 6 inch
Height	14 ft
Pressure	350 psia
Temperature	800 F
Catalyst Volume	170 ft3
Catalyst Life	2 year
Materials of Construction	304L clad on Carbon Steel

Sour Shift Primary Bed

Type	Fixed-bed
Quantity	1
Diameter	3 ft, 6 inch
Height	11 ft
Pressure	350 psia
Temperature	800 F
Catalyst Volume	80 ft3
Catalyst Life	2 year
Materials of Construction	304L clad on Carbon Steel

Sour Shift Secondary Bed

Type	Fixed-bed
Quantity	1
Diameter	4 ft, 6 inch
Height	14 ft
Pressure	350 psia
Temperature	800 F
Catalyst Volume	150 ft3
Catalyst Life	3 year
Materials of Construction	304L clad on Carbon Steel

Tanks

Shift Gas Phase Separator

Type	Horizontal
Quantity	1
Diameter	6 ft
Length	18 ft
Pressure	350 psia
Temperature	500 F
Materials of Construction	304L clad on Carbon Steel

Heat Exchangers

Start-Up Heater

Type	Shell and Tube
Quantity	1
Fluid (Hot/Cold)	HP Steam/Syngas
Duty	10 MMBtu/hr
Area	5,000 ft2
Pressure	350 psia
Temperature	600 F
Materials of Construction	Carbon Steel

Guard Bed Heater

Type	Shell and Tube
Quantity	1
Fluid (Hot/Cold)	Syngas / Syngas
Duty	12.1 MMBtu/hr
Area	4,706 ft2
Pressure	350 psia
Temperature	600 F
Materials of Construction	Carbon Steel

Primary Bed Heater

Type	Shell and Tube
Quantity	1
Fluid (Hot/Cold)	Syngas / Saturation Water
Duty	19.3 MMBtu/hr
Area	15,197 ft2
Pressure	350 psia
Temperature	800 F
Materials of Construction	304L clad on Carbon Steel

Primary Bed Cooler

Type	Shell and Tube
Quantity	1
Fluid (Hot/Cold)	Syngas / Saturation Water
Duty	7.3 MMBtu/hr
Area	1,955 ft2
Pressure	350 psia
Temperature	800 F
Materials of Construction	316 Stainless clad

Heat Exchangers (continued)

Sat Water Loop Cooler

Type	Shell and Tube
Quantity	1
Fluid (Hot/Cold)	Sat Water / Cooling Water
Duty	74 MMBtu/hr
Area	12,652 ft2
Pressure	300 psia
Temperature	300 F
Materials of Construction	Carbon Steel

Secondary Bed Cooler

Type	Shell and Tube
Quantity	1
Fluid (Hot/Cold)	Syngas / Sat Water
Duty	11.2 MMBtu/hr
Area	149 ft2
Pressure	350 psia
Temperature	700 F
Materials of Construction	Carbon Steel

Secondary Bed Heater

Type	Shell and Tube
Quantity	1
Fluid (Hot/Cold)	Shifted gas / Claus Tail Gas
Duty	29.5 MMBtu/hr
Area	12,461 ft2
Pressure	350 psia
Temperature	700 F
Materials of Construction	Carbon Steel

Secondary Bed Exchanger

Type	Shell and Tube
Quantity	1
Fluid (Hot/Cold)	Shifted Gas / Cooling Water
Duty	4.7 MMBtu/hr
Area	871 ft2
Pressure	350 psia
Temperature	500 F
Materials of Construction	Carbon Steel

Heat Exchangers (continued)

Product Cooler

Type	Shell and Tube
Quantity	1
Fluid (Hot/Cold)	Shifted Gas / Cooling Water
Duty	31 MMBtu/hr
Area	14,912 ft2
Pressure	350 psia
Temperature	400 F
Materials of Construction	Carbon Steel

Pumps

Humidification Loop Water Pump

Type	Centrifugal
Quantity	1 operating / 1 spare
Fluid	Water @ 800 gpm
Work	50 hp
Pressure Rise	30 psi
Outlet Pressure	350 psia
Temperature	400 F
Materials of Construction	Carbon Steel

Desaturator Water Pump

Type	Centrifugal
Quantity	1 operating / 1 spare
Fluid	Water @ 800 gpm
Work	50 hp
Pressure Rise	30 psi
Outlet Pressure	350 psia
Temperature	400 F
Materials of Construction	Carbon Steel

X.20.6 METHANATION SYSTEM

Towers

Humidification Tower

Type	Tray Column
Quantity	1
Diameter	5 ft, 6 inch
Height	30 ft
Number of Trays	15
Pressure	300 psia
Temperature	400 F
Materials of Construction	316 Stainless Internals, Carbon Steel Shell

Process Reactors

Primary Methanator

Type	Fixed-bed
Quantity	1
Diameter	6 ft
Height	18 ft
Pressure	350 psia
Temperature	800 F
Catalyst Volume	370 ft3
Catalyst Life	3 year
Materials of Construction	304L clad on Carbon Steel

Secondary Methanator

Type	Fixed-bed
Quantity	1
Diameter	3 ft, 10 inch
Height	11 ft, 6 inch
Pressure	350 psia
Temperature	800 F
Catalyst Volume	100 ft3
Catalyst Life	6 year
Materials of Construction	304L clad on Carbon Steel

Sulfur Guard

Type	Fixed-bed
Quantity	1
Diameter	5 ft, 6 inch
Height	16 ft
Pressure	350 psia
Temperature	500 F
Catalyst Volume	270 ft3
Catalyst Life	3 year
Materials of Construction	Carbon Steel

Tanks

Condensate Surge Tank

Type	Vertical
Quantity	1
Diameter	10 ft
Height	11 ft
Pressure	350 psia
Temperature	400 F
Materials of Construction	Carbon Steel

Reactor Steam Drum

Type	Horizontal
Quantity	1
Diameter	7 ft
Length	20 ft
Pressure	700 psia
Temperature	500 F
Materials of Construction	Carbon Steel

HRSG Steam Drum

Type	Horizontal
Quantity	1
Diameter	6 ft
Length	18 ft
Pressure	700 psia
Temperature	500 F
Materials of Construction	Carbon Steel

Heat Exchangers

Guard Bed Heater

Type	Shell and Tube
Quantity	1
Fluid (Hot/Cold)	Syngas / Syngas
Duty	13.5 MMBtu/hr
Area	3,997 ft2
Pressure	350 psia
Temperature	900 F
Materials of Construction	304L clad on Carbon Steel

Primary Bed Cooler – S/H

Type	Shell and Tube
Quantity	1
Fluid (Hot/Cold)	Syngas / Steam
Duty	16.8 MMBtu/hr
Area	6,073 ft2
Pressure	600 psia
Temperature	800 F
Materials of Construction	304L clad on Carbon Steel

Primary Bed Cooler – Evap

Type	Shell and Tube
Quantity	1
Fluid (Hot/Cold)	Syngas / Boiling Water
Duty	39 MMBtu/hr
Area	11,188 ft2
Pressure	600 psia
Temperature	800 F
Materials of Construction	304L clad on Carbon Steel

Primary Bed Cooler – Econ

Type	Shell and Tube
Quantity	1
Fluid (Hot/Cold)	Syngas / Subcooled Water
Duty	31 MMBtu/hr
Area	15,332 ft2
Pressure	600 psia
Temperature	800 F
Materials of Construction	316 Stainless clad

Heat Exchangers (continued)

Secondary Reactor Bed Cooler

Type	Shell and Tube
Quantity	1
Fluid (Hot/Cold)	Syngas / Boiling Water
Duty	51 MMBtu/hr
Area	23,114 ft2
Pressure	600 psia
Temperature	800 F
Materials of Construction	304L clad on Carbon Steel

Secondary Bed Cooler

Type	Shell and Tube
Quantity	1
Fluid (Hot/Cold)	SNG Product Gas / Sat Water
Duty	42.7 MMBtu/hr
Area	14,760 ft2
Pressure	350 psia
Temperature	700 F
Materials of Construction	Carbon Steel

SNG Cooler I

Type	Shell and Tube
Quantity	1
Fluid (Hot/Cold)	SNG Product Gas / Boiling Water
Duty	54 MMBtu/hr
Area	53,816 ft2
Pressure	350 psia
Temperature	700 F
Materials of Construction	Carbon Steel

SNG Cooler II

Type	Shell and Tube
Quantity	1
Fluid (Hot/Cold)	SNG Product Gas / Sat Water
Duty	42 MMBtu/hr
Area	58,299 ft2
Pressure	350 psia
Temperature	500 F
Materials of Construction	Carbon Steel

Heat Exchangers (continued)

SNG Cooler III

Type	Shell and Tube
Quantity	1
Fluid (Hot/Cold)	SNG Product Gas / Cooling Water
Duty	23 MMBtu/hr
Area	12,792 ft2
Pressure	350 psia
Temperature	400 F
Materials of Construction	Carbon Steel

Pumps

Humidification Loop Water Pump

Type	Centrifugal
Quantity	1 operating / 1 spare
Fluid	Water @ 230 gpm
Work	20 hp
Pressure Rise	30 psi
Outlet Pressure	350 psia
Temperature	400 F
Materials of Construction	Carbon Steel

Surge Tank Water Pump

Type	Centrifugal
Quantity	1 operating / 1 spare
Fluid	Water @ 500 gpm
Work	40 hp
Pressure Rise	30 psi
Outlet Pressure	350 psia
Temperature	400 F
Materials of Construction	Carbon Steel

Skid Units

TEG Unit

Gas Flow	50,000 ft3/hr
Gas Temp	120 F
Gas Pressure	270
Inlet Moisture	6,500 ppm
Outlet Moisture	10 ppm

X.20.7 STEAM SYSTEM

Deaerator
Flash Tank
Low Pressure Steam Header
Medium Pressure Steam Header
Pumps

X.20.8 POWER CYCLE EQUIPMENT

Tanks

Flash Tank

Type	Vertical
Quantity	1
Diameter	8 ft
Height	20 ft
Pressure	100 psia
Temperature	400 F
Materials of Construction	Carbon Steel

Dearator

Type	Horizontal
Quantity	1
Diameter	15 ft
Length	30 ft
Pressure	100 psia
Temperature	500 F
Materials of Construction	Carbon Steel

Pumps

LP BFW Pump

Type	Centrifugal
Quantity	1 operating / 1 spare
Fluid	Water @ 30 gpm
Work	20 hp
Pressure Rise	250 psi
Outlet Pressure	300 psia
Temperature	300 F
Materials of Construction	Carbon Steel

IP BFW Pump

Type	Centrifugal
Quantity	1 operating / 1 spare
Fluid	Water @ 50 gpm
Work	30 hp
Pressure Rise	600 psi
Outlet Pressure	650 psia
Temperature	300 F
Materials of Construction	Carbon Steel

HP BFW Pump

Type	Centrifugal
Quantity	1 operating / 1 spare
Fluid	Water @ 800 gpm
Work	730 hp
Pressure Rise	1,205 psi
Outlet Pressure	1,245 psia
Temperature	300 F
Materials of Construction	Carbon Steel

Condensate Pump

Type	Centrifugal
Quantity	1 operating / 1 spare
Fluid	Water @ 600 gpm
Work	150 hp
Pressure Rise	249 psi
Outlet Pressure	250 psia
Temperature	300 F
Materials of Construction	Carbon Steel

Generating Units

P&W FT8 TwinPac Gas Turbine

Design Fuel	SNG
Power Output	52 MW @ ISO Conditions
Phase/Frequency/Voltage	3/60 Hz/13.8kV

Steam Turbine

Type	Non-reheat, extraction
Power Output	39 MW
Throttle Pressure, psia	865
Throttle Temperature, F	900
Extraction Pressure, psia	510
Exhaust Pressure, psia	1.0

Heat Exchangers

HRSG for FT8 TwinPac

Type	Shell and tube
Quantity	1
Fluid (Hot/Cold)	Flue Gas / BFW&Steam
Duty	330 MMBtu/hr
Pressure	1,250 psia
Temperature	1,250 F
Materials of Construction	Carbon Steel

Steam Turbine Condenser

Type	Shell and Tube
Quantity	1
Fluid (Hot/Cold)	Condensing Steam / Cooling Water
Duty	270 MMBtu/hr
Pressure	1 psia
Temperature	200 F
Materials of Construction	316 Stainless lined Carbon Steel

X.20.9 CIRCULATING WATER SYSTEM

Plume-abated mechanical draft cooling tower

Cooling Duty: 334 MMBtu/hr

Circulating water flow rate: 37,095 gpm

Pumps

X.20.10 COAL AND LIMESTONE RECEIVING AND HANDLING SYSTEMS

Item No.	Equipment	Quantity	Flow Rate TPH	Specs	weight	Comments
	Coal handling system					
1	Truck Scale	1		200,000 lb, 80'x11', 8 load cells	33,800Lb	
2	Coal Reclaim Feeder	1	250	40'-0" lg		
3	Vib. Screen	1	250	8' wx16 lg		
4	Coal Silos Loading HAC	1	250			
5	Coal Scale	1	250			
6	Magnetic Separator	1	250	42" w x 66" lg x 30" h		with rectifier
7	Overs Conveyor (Optional)					
8	Reversible Belt Conveyor	1	250			
9	Coal Silo A	1		430T, 32' dia. X 70' high		
10	Coal Silo B	1		430T, 32' dia. X 70' high		
11	Coal Maint Gates A	1		24" sq. manual		
12	Coal Maint Gates B	1		24" sq. manual		
13	Coal Diverter Gate A	1		24" sq. Pneumatic		
14	Coal Diverter Gate B	1		24" sq. Pneumatic		
15	Coal Silo discharge feeder A	1		24"x 44'-0"		
16	Coal Silo discharge feeder B	1	50	24"X 48'-0"		
	Limestone handling system					
17	Loading Hopper	1		1000 lbs 5'sq.x3' high		
18	Limestone Reclaim Feeder	1	10	12" dia. X 10'-0"		
19	Limestone Silos Loading HAC	1	10			
20	Limestone Scale	1				
21	limestone Silo	1		22T, 12' dia. X 28'		
22	Limestone Maint Gate	1		24" sq. manual		
23	Limestone Diverter Gate	1		24" sq. Pneumatic		
24	Limestone Silo discharge feeder A	1		12" x 12'-0"		
25	Limestone Silo discharge feeder B	1		12" x 18'-0"		
	Coal/Limestone					
26	Gasifier Feed HAC A	1				
27	Gasifier Feed HAC B	1				
28	Weigh Hopper	1		50T, 12' dia. 18'		
29	Weigh Hopper Load Cells	4				Add 4 Load cells
30	Loss weigh Hopper	1		7T, 6' dia. X 10'		

This page is intentionally left blank

XI IMPACT OF PRB COAL ON DESIGN, PERFORMANCE, AND COST OF REFERENCE PLANTS

Reference Plant conceptual designs and conceptual level cost estimates based on a single operating BGL 1000 gasifier using Wyodak Anderson PRB coal as the fuel were developed for the five cases evaluated with Illinois #6 coal as follows:

- Case 1B – Syngas production
- Case 1BH – Syngas and H_2 co-production
- Case 2B – SNG production
- Case 3B – Syngas to power production
- Case 4B – SNG to power production

The designs and estimated costs are based on the requirements defined in the DRD provided in Section V. The requirements include the following:

- Fuel for the gasifier is as-received Wyodak Anderson PRB coal with a nominal size of ¼" x 2", nominal moisture content of 25.2%, and nominal heating value of 8,875 Btu/lb
- Limestone is used as the flux in the gasifier
- The gasifier uses an oxidant that contains 99.5% purity oxygen purchased from a third party who owns and operates an ASU on the site. Nitrogen for purging is also purchased from the third party. The cost for oxygen and nitrogen includes the third party being responsible for the cost of all utilities.
- Electrical power is purchased from a local provider.
- A Rectisol process is used for acid gas removal from the syngas.
- Elemental sulfur is produced as a byproduct.
- The gasifier process package design is provided by Envirotherm GmbH/Allied Syngas Corporation and consists of all equipment/systems from the coal/flux feed lock to the inlet of the syngas AGR system and the discharge of the slag lock, including the tar/oil separation system and reinjection system.

- The gasifier process package includes a single operating gasifier and a spare gasifier complete with coal/flux feed lock, gasifier, gas wash cooler, slag quench vessel, and slag lock vessel.
- Capital cost estimates for the gasifier process are based on a WorleyParsons' in-house BGL IGCC cost model utilized for previous IGCC evaluations.
- Capital cost estimates for other systems are developed by WorleyParsons based on a combination of in-house cost data and budgetary quotes provided by equipment supplies.
- Construction labor costs are based on Gulf Coast non-union labor rates.

XI.1 IMPACT ON REFERENCE PLANT DESIGNS

The major impacts of using PRB coal on the plant designs previously discussed based on Illinois #6 coal include the following:

- For a gasifier (BGL 1000) of the same physical size, the gasifier coal throughput with PRB coal is about 10% less than the throughput with Illinois #6 coal due to the higher moisture content of the PRB coal. That, combined with the lower heating value of the PRB coal relative to the Illinois #6 coal results in lower product gas mass and energy throughput and thus somewhat smaller cleanup system sizes.
- The low sulfur content of the PRB coal results in elemental sulfur production rates (based on a single BGL gasifier system) below that which makes a Claus system economical. As a basis for the evaluations performed, a LO-CAT elemental sulfur production process was assumed, although there may be other processes that could be used as an alternative, such as the CrystaSulf process, the performance and economics of which should be compared with the LO-CAT process in the future.
- The energy content of the syngas produced from PRB coal in a single BGL gasifier is not sufficient to fuel a GE6FA gas turbine combined cycle as was used in the Illinois #6 Syngas to Power Reference Plant case. The syngas quantity and energy appears to be sufficient to fuel a combined cycle equivalent in capacity to a Pratt & Whitney FT8 Twin Pack combined cycle system. A P&W FT8 Twin Pack based combined cycle was used solely as a basis for estimating the power generation and cost of the PRB Coal Derived Syngas to Power Reference Plant. No discussions were held with P&W to ascertain an interest in development of a

syngas-fired gas turbine or to verify performance and cost estimates.

- The estimated flow and energy content of SNG produced from a single BGL gasifier from PRB coal appears to be just sufficient to fuel a P&W FT8 Twin Pack based combined cycle with no excess SNG product. Whereas, in the Illinois #6 coal Reference Plant, excess SNG was available making that Reference Plant a combined fuel and power production plant.
- More attention will have to be paid to dust suppression and collection with PRB coal because of its propensity to produce more dust during processing and its higher reactivity relative to Illinois #6 coal.

XI.2 IMPACT ON REFERENCE PLANT PERFORMANCE

A summary of the performance characteristics for the Reference Plants using PRB coal as the fuel is presented in Exhibit XI-1. The coal, limestone, oxygen, and steam consumption rates are constant for all cases. The elemental sulfur and slag production rates are constant for all cases.

Exhibit XI-1 Summary of Reference Plant Conceptual Performance Characteristics with PRB Coal

Wyodak Anderson PRB Coal	SYNGAS PRODUCTION	SYNGAS/H_2 CO-PRODUCTION	SNG PRODUCTION	SYNGAS TO POWER	SNG TO POWER
	Case 1B	Case 1BH	Case 2B	Case 3B	Case 4B
Production Figures					
Net Syngas Product for Export[a], lb/hr	91,524	89,824	23,020	n/a	n/a
Syngas Product Energy[b], MMBtu/hr (HHV)	636	533	533	n/a	n/a
Hydrogen Production, lb/hr	n/a	1,700	n/a	n/a	n/a
Hydrogen Energy, MMBtu/hr (HHV)	n/a	103	n/a	n/a	n/a
CTCC Power Production[c], kWe	n/a	n/a	n/a	87,400	73,000
Elemental Sulfur Product, lb/hr	262	262	262	262	262
Slag Production, lb/hr	7,751	7,751	7,751	7,751	7,751
Consumption Figures					
Coal Thermal Input, MMBtu/hr (HHV)[d]	760	760	760	760	760
Coal Feed Flow, lb/hr	85,686	85,686	85,686	85,686	85,686
Limestone Feed Flow, lb/hr	1,182	1,182	1,182	1,182	1,182
Oxygen Flow[e], lb/hr	32,130	32,130	32,130	32,130	32,130
Steam to Gasifier[f], lb/hr	18,312	18,312	18,312	18,312	18,312
Nitrogen[g], lb/hr	2,910	2,910	n/a	80,425	n/a
Syngas for Feed Lock Purge, lb/hr	n/a	n/a	2,970	n/a	2,970
Methanol Makeup, lb/hr	30	30	50	30	50
Process Water Makeup[h], lb/hr	22,230	22,345	86,237	84,482	88,338
Cooling Water Makeup, lb/hr	52,440	52,440	96,636	175,675	240,553
Natural Gas, [i] lb/hr	140	140	0	140	0
Aux. Electric Power (excl. ASU), kWe	4,066	4,071	6,652	10,617	8,454
ASU Electric Power, kWe	6,500	6,500	6,500	6,500	6,500
ASU Cooling Water Makeup, lb/hr	18,130	18,130	18,130	18,130	18,130
Plant Equivalent Efficiency					
Fuel and Power Energy Input, MMBtu/hr	873[j]	873[j]	897[j]	831[k]	828[k]
Net Energy of Products[l], MMBtu/hr	636	636	533	262	220
Plant Net Thermal Efficiency, %	72.8	72.8	59.4	31.5	26.6

Note a: Total syngas from cleanup system minus syngas used in gasification system processes
Note b: Energy in product as defined in Note a.
Note c: Net power output of CT/G and ST/G. Estimates based on information that WorleyParsons has with respect to natural gas-fired and syngas-fired combustion turbines and have not been verified for the project syngas by vendor.
Note d: Based on Wyodak Anderson PRB coal with an as-received higher heating value of 8,875 Btu/lb.
Note e: Total to gasifier and slag tap (ring) burner in SNG production cases
Note f: Produced in a tailgas/syngas fired boiler except power production cases where steam is produced in CTCC HRSG.
Note g: For feed lock purge and diluent in combustion turbine
Note h: A detailed optimization of water recycling in the plant was not performed. An optimization study may reduce the process water makeup requirement.
Note I To slag tap (ring) burner
Note j: Coal energy plus natural gas energy plus purchased Aux. Power and ASU power expressed as thermal energy to utility power generation plant with HHV efficiency of 32.8%
Note k: Coal energy plus ASU power expressed as thermal energy to utility power generation plant with HHV efficiency of 32.8%
Note l: Energy in syngas, SNG, or net electric power product (CTCC net power – Aux. Power) expressed in MMBtu/hr

XI.2.1 Syngas Production Reference Plant

Approximately 636 MMBtu/hr (HHV) of medium Btu (about 364 Btu/scf) of clean product syngas is produced from the approximate 760 MMBtulhr (HHV) of coal, resulting in a coal HHV to product syngas HHV energy efficiency of about 84%. Additionally, another approximate 42 MMBtu/hr of gas from other processes within the system (tailgas from the Rectisol process, treated gas from the LO-CAT process, etc.) is used as fuel in a fired boiler to generate steam for the gasifier and oxygen heater.

About 32,130 lb/hr of oxygen is consumed in the gasifier along with about 18,312 lb/hr of steam resulting in an oxygen-to-coal ratio and steam-to-coal ratio of about 0.37 lb/lb and 0.21 lb/lb, respectively.

The auxiliary power consumption by plant processes, excluding the ASU, totals about 4,066 kWe, of which about 60% is for the Rectisol process. The power requirement for the ASU is estimated to be about 6,500 kWe. Assuming generation of this power at an efficiency of 32.8%, in accordance with the DOE QGESS, the total fuel and power energy input to the plant is about 873 MMBtu/hr. Thus, the plant net thermal efficiency, defined in accordance with the DOE GESS, based on the 636 MMBtu/hr syngas product energy is about 73%.

XI.2.2 Syngas and H_2 Co-production Reference Plant

In the Reference Syngas and H_2 Co-production Plant, the 91,524 lb/hr (636 MMBtu/hr) of clean syngas from the Rectisol process, containing about 28%(vol) H_2 is sent to a PSA unit. Approximately 1,700 lb/hr (184 MMBtu/hr) of H_2 (99.9% purity) product is removed from the syngas as a separate product stream to be marketed along with the remaining 89,824 lb/hr of syngas product having an HHV energy content of about 533 MMBtu/hr (5,930 Btu/lb or 373 Btu/scf).

As in the Syngas Production Reference Plant another approximate 42 MMBtu/hr of gas from other processes within the system is used as fuel in a fired boiler to generate steam for the gasification process.

The additional auxiliary power requirement associated with the PSA is only about 5 kWe; thus, the plant net thermal efficiency, defined in accordance with the DOE GESS, is about the same as that of the syngas production plant (73%).

XI.2.3 SNG Production Reference Plant

The syngas from the BGL gasifier contains about 6%(vol) CH_4., 44%(vol) CO, and 20%(vol) H_2. About 75% of the syngas from the gasification process is directed through a water-gas shift reaction and then mixed back with the other 25% of the syngas to obtain the three-to-one ratio of H_2 to CO required for the methanation process. The combined syngas stream is transported to the Rectisol process for acid gas removal, and then transported to the methanation process. About 23,020 lb/hr of pipeline quality SNG product with an HHV energy content of about 533 MMBtu/hr is produced in the process, resulting in a coal HHV to SNG product HHV energy efficiency of about 70%. Additionally, another approximate 38 MMBtu/hr of gas from other processes within the system (tailgas from the Rectisol process, treated gas from the LO-CAT process, etc.) is used as fuel in a fired boiler to generate steam for the gasifier and oxygen heater (about 21,000 lb/hr), and a small amount of steam (about 1,070 lb/hr) for other processes. The shift reactor is a large consumer of steam in the plant (approximately 45,000 lb/hr); however, a HRSG recovering energy in the methanation process generates enough steam for the shift reactors in addition to much of the steam required for other processes.

The auxiliary power consumption by plant processes, excluding the ASU, totals about 6,652 kWe. The power requirement for the ASU is estimated to be about 6,500 kWe. Assuming generation of this power at an efficiency of 32.8%, in accordance with the DOE QGESS, the total fuel and power energy input to the plant is about 897 MMBtu/hr. Thus, the plant net thermal efficiency based on the 533 MMBtu/hr SNG product energy is about 59%.

XI.2.4 Syngas to Power Production Reference Plant

In the PRB coal derived Syngas to Power Reference, approximately 95,600 lb/hr of combined syngas (76,041 lb/hr), Rectisol process tailgas (14,676 lb/hr), and LO-CAT treated gas (3,881 lb/hr) with a combined energy content (LHV) of about 536 MMBtu/hr (570 MMBtu/hr HHV) is produced and used to fuel a combustion turbine in a combined cycle system. Approximately 77,500 lb/hr of nitrogen is also supplied from an ASU to the combustion turbine for NOx control.

The exhaust from the combustion turbine passes through a HRSG where an additional 15,483 lb/hr of clean syngas with an energy content (HHV) of about 108 MMBtu/hr is used as supplemental fuel

to provide energy to generate steam for a steam turbine/generator and steam for the gasification process.

Approximately 87,400 kWe of gross electrical power is generated by the combined cycle system. The auxiliary electrical power requirements of the plant are estimated to be about 10,617 kWe, about 42% of which is for nitrogen compression and 23% for the Rectisol process. Therefore, the net plant power output, excluding the ASU power requirement, is about 77MWe.

The direct and indirect fuel energy to the plant, including the ASU electrical input converted to indirect fuel input via a 32.8% conversion efficiency, totals about 831 MMBtu/hr. The approximate 77MWe net power generated is an equivalent 262 MMBtuhr. Therefore, the Syngas to Power Reference Plant net thermal efficiency, as defined in accordance with the DOE QGESS, is about 31.5%. As discussed for the reference plant using Illinois #6 coal as the fuel, it should be emphasized that this is an industrial application of gasification technology, with a nominal 1,000 MMBtu/hr gasification system fueling a single small combustion turbine combined cycle, and the efficiency should not be compared with that projected for large, utility-scale Integrated Gasification Combined Cycles (IGCC).

XI.2.5 SNG to Power Production Reference Plant

In this Reference Plant, the approximate 23,020 lb/hr of SNG produced from the PRB coal is used to fuel a combustion turbine combined cycle, based on a P&W FT8 Twin Pack. About 95% of the SNG is used as fuel in the combustion turbine. The combustion turbines' exhaust is routed to the duct burner section of the HRSG where the remaining 5% of the SNG produced and tailgas from the Rectisol is introduced as supplemental fuel. The HRSG generates steam for the gasifier, oxygen heater, and the steam turbine/generator. The Rectisol tail gas is burned in the duct burner because it is unusable in the gas turbine or methanation process. There is no excess SNG to be marketed as a fuel product in the PRB coal case as there was in the Illinois #6 coal case because of the lower energy content of the PRB coal.

The combined cycle power system produces about 73,000 kWe of power. The auxiliary power requirements of the plant are estimated to total about 8,454 KWe, excluding the power requirement of the ASU. Therefore, the net plant power production is about 64,546 kWe, or 220 MMBtu/hr equivalent. The total direct and indirect fuel

input to the plant is about 828 MMBtu/hr, including the ASU electrical energy requirement converted to indirect fuel input using a conversion efficiency of about 32.8% in accordance with the DOE QGESS. Therefore, the total estimated plant net thermal efficiency is about 27%. This is considerably lower than that reported for the Illinois #6 coal fueled SNG to Power Production Reference Plant; however, in that plant, about 20% of the SNG produced was a fuel co-product to the power product, and the HHV energy of the SNG was accounted for in the product energy. In the PRB coal case, all of the SNG was converted to power in the combustion turbine combined cycle at the conbined cycle efficiency conversion rate (about 44%), thus reducing the net product energy and decreasing the net plant thermal efficiency relative to the Illinois #6 case.

XI.3 IMPACT ON REFERENCE PLANT COST

The capital and annual O&M costs were estimated based on the same criteria and assumptions as were the Illinois #6 coal reference plant cases, as discussed in Section V, except for the delivered cost of fuel, which was assumed to be about $17.75/ton ($1.00/MMBtu) for PRB coal. A summary of the estimated capital and O&M costs for the PRB coal reference plant cases is presented in Exhibit XI-2.

The absolute capital costs (2005 dollars) are somewhat lower (8% to 15%) for the PRB coal cases than the Illinois#6 coal cases because of the lower throughput of the system. However, because of the lower energy content of the coal and resulting product, the capital cost per unit of product energy per day is higher (about 30%) for the PRB coal cases.

The fixed annual O&M costs for the PRB coal cases are expected to be similar to those for the reference cases using Illinois #6 coal; therefore, on a per unit of product energy basis, they would be about 45% higher. The variable operating costs excluding fuel costs are estimated to be about 10% higher, on a per unit of product energy basis, for the PRB coal cases, with the fuel cost being about 30% lower on a per unit of product basis. The net result is that on a per unit of product energy basis, the total annual O&M costs, including fixed, variable, and fuel, are about the same for the PRB coal cases as for the Illinois #6 coal cases.

Exhibit XI-2 Summary of Reference Plant Conceptual Cost Estimates with PRB Coal

Wyodak Anderson PRB Coal	**Syngas**	**Syngas/H_2**	**SNG**	**Syngas to Power**	**SNG to Power**
	Case 1B	Case 1BH	Case 2B	Case 3B	Case 4B
Capital Cost (million dollars, June 2005)[a]					
Coal & Limestone System	3.2	3.2	3.2	3.2	3.2
Syngas Production Plant	54.6	59.4	77.4	50.0	72.9
Combustion Turbine Combined Cycle Plant[b]	n/a	n/a	n/a	57.8	53.4
Balance of Plant	12.8	12.8	14.8	14.8	15.3
Buildings, Structures, & Site Improvements	2.5	2.5	2.5	2.5	2.5
Total Field Cost	73.1	78.0	97.9	128.4	147.3
Professional Services	7.3	7.8	9.8	12.8	14.7
Other Costs	4.0	4.3	5.4	7.3	8.6
Total w/o Contingency	84.4	90.1	113.1	148.5	170.7
Contingency	16.9	17.4	21.0	23.0	26.7
Total Plant Cost	**101.3**	**107.5**	**134.1**	**171.5**	**197.4**
Total Plant Cost, $/MMBtu/day product	6,640	7040	10,540	n/a	n/a
Total Plant Cost, $/kWe net product	n/a	n/a	n/a	2,240	3,040
Annual Operating and Maintenance Costs (million dollars, June 2005)					
Fixed O&M Costs	5.8	5.9	6.1	7.9	8.1
Variable O&M Costs[c]	9.2	9.1	10.3	8.9	9.1
Fuel (Coal) Cost	6.3	6.3	6.3	6.1	6.1
Fixed O&M Costs, $/MMBtu product	1.10	1.11	1.37	n/a	n/a
Variable O&M Costs[b], $/MMBtu product	1.73	1.73	2.32	n/a	n/a
Fuel (Coal) Cost, $/MMBtu product	1.20	1.20	1.43	n/a	n/a
Fixed O&M Costs, $/kWe net product	n/a	n/a	n/a	103	126
Variable O&M Costs[b], $/kWh net product	n/a	n/a	n/a	0.014	0.018
Fuel (Coal) Cost, $/kWh net product	n/a	n/a	n/a	0.010	0.012

Note a: Excluding escalation, financing, and owner's costs such as for licenses, permits, etc.
Note b. Cost estimates are by WorleyParsons and not verified by vendors
Note c. Includes credit for value of sulfur by-product

This page is intentionally left blank

XII POTENTIAL ENVIRONMENTAL IMPACT AND APPLICABLE ENVIRONMENTAL REGULATIONS

There are three perspectives from which to assess the potential impact and applicable environmental regulations with respect to industrial gasification: 1) the operations of a new coal gasification based syngas or SNG production facility supplying fuel to industrial customers, 2) the operations of a new coal gasification based syngas or SNG production facility integrated with a combustion turbine combined cycle system for industrial power generation, and 3) the industrial end-user of syngas or SNG produced from coal gasification and the requirements associated with fuel switching.

XII.1 NEW SYNGAS OR SNG PRODUCTION FACILITIES AND POWER FACILITIES

The evaluation of the emission requirements applicable to combustion units firing synthetic gas produced by coal gasification started with a review of New Source Performance Standards (NSPS). However, permitting a new plant with emissions controlled to NSPS requirements will probably not be acceptable to the EPA and/or individual states, who will require at least Best Available Control Technology (BACT) as specified in the Prevention of Significant Deterioration of Air Quality (PSD) regulations for areas meeting ambient air quality standards, or Lowest Achievable Emission Rate (LAER) technology as specified in the New Source Review (NSR) regulations for areas not meeting ambient air quality standards.

New Source Performance Standards Regulations

The following is paraphrased for clarification from the February 28, 2005 proposed revisions to 40CFR60, Subpart Da—Standards of Performance for Electric Utility Steam Generating Units. From the applicability section of this regulation, heat recovery steam generators that are associated with combined cycle gas turbines burning synthetic-coal gas are subject to this subpart. This subpart will continue to apply to all other electric utility combined cycle gas turbines that are capable of combusting more than 73 MW (250 MMBtu/hour) heat input of fossil fuel in the heat recovery steam generator. Further, if the combined cycle gas turbine burn synthetic-coal gas, emissions resulting from combustion of fuels are subject to this subpart. This is further clarified in 40CFR60, Subpart KKKK-Standards of Performance for Stationary Combustion Turbines regulations, in which the EPA states that stationary combustion

turbines at integrated gasification combined cycle electric utility steam generating units that are subject to Subpart Da are exempt from Subpart KKKK. Therefore, they consider it appropriate to cover combustion turbines fueled by gasified coal under the Utility NSPS (Subpart Da). Combustion turbines fueled by gasified coal and not meeting the heat input requirements of the Utility NSPS, i.e., more than 250 MMBtu/hr, would be covered by the stationary combustion turbine rule (Subpart KKKK) under the "other fuel" category.

Under the Definitions section of Subpart Da, Coal means all solid fuels ... coal refuse, and petroleum coke. Synthetic fuels derived from coal for the purpose of creating useful heat, including but not limited to solvent-refined coal, gasified coal, coal-oil mixtures, and coal-water mixtures are included in this definition for the purposes of Subpart Da.

Exhibit XII-1 lists the NSPS emission limits applicable to stationary combustion turbines firing gasified coal.

Exhibit XII-1 Proposed NSPS Emissions Limitations for Stationary Combustion Turbines Constructed after 18Feb2005 (40CFR60, Subpart KKKK)

POLLUTANT	LIMITATION
Nitrogen Oxides	For Thermal Input ≤ 50 MMBtu/hr (HHV): 96 ppmvd @ 15% O_2 or 5.5 lb/MWh
	For 50 MMBtu/hr < Input ≤ 850 MMBtu/hr: 74 ppmvd @ 15% O_2 or 3.6 lb/MWh
	For Thermal Input > 850 MMBtu/hr (HHV): 42 ppmvd @ 15% O_2 or 1.3 lb/MWh
Sulfur Dioxide	0.90 lb/MWh or not burn any fuel that contains total potential sulfur emissions in excess of 0.060 lb/MMBtu of heat input

Regarding the burning of gasified coal in industrial boilers, 49CFR60, Subpart Db—Standards of Performance for Industrial-Commercial-Institutional Steam Generating Units includes the following definition, Coal means all solid fuels … coal refuse, and petroleum coke. Coal-derived synthetic fuels, including but not limited to solvent refined coal, gasified coal, coal-oil mixtures, and coal-water mixtures, are also included in this definition for the purposes of Subpart Db. Exhibit XII-2 lists the NSPS emission limits applicable to large (>100 MMBtu/hr) industrial-commercial-institutional steam generating units

firing gasified coal. The emissions limits for small steam generating units are the same except with respect to NOx for which there is no limit (40CFR60, Subpart Dc).

Exhibit XII-2 NSPS Emission Limitations For Industrial-Commercial-Institutional Steam Generating Units (> 100 MMBtu/hr) (40CFR60, Subpart Db)

Pollutant	Emission Limit
Particulate Matter	0.030 lb/MMBtu of heat input
Opacity	20%, except for one 6-minute period/hour of not more than 27%
Sulfur Dioxide	0.20 lb/MMBtu or 92% reduction and 1.2 lb/MMBtu
Nitrogen Oxides	0.10 (lhrr), or 0.20 lb/MMBtu (hhrr), or 2.1 lb/MWh of gross energy output

lhrr – low heat release rate (≤ 70,000 Btu/hr-ft3)
hhrr – high heat release rate (> 70,000 Btu/hr-ft3)

Prevention of Significant Deterioration (PSD) regulations

The PSD regulations are applicable to new major stationary sources being located in areas meeting ambient air quality standards. The PSD requirements are developed around the concept of installing the Best Available Control Technology (BACT). BACT is the maximum degree of emission reduction determined on a case-by-case basis for new sources in clean air areas with cost, energy, and technical feasibility taken into account, but in no case is BACT less stringent than NSPS. Exhibit XII-3 presents a range of BACT determinations made nationwide for the coal boilers, circulating fluidized bed (CFB) boilers, IGCC, and combustion turbines and combustion turbines firing gasified coal (a.k.a combustion turbine exhaust from IGCC).

Exhibit XII-3 Best Available Control Technology Determinations for Other Projects

Process	Pollutants	Emissions Limitation	Type of Technology
Coal - PC Boiler	PM/PM-10 (Filterable)	0.012 – 0.015 lb/10^6 Btu	Fabric Filter or ESP
	PM-10 (Filterable + Condensable)	0.018 – 0.038 lb/10^6 Btu	Fabric Filter or ESP
	Sulfur Dioxide	0.06 – 0.2 lb/10^6 Btu	Low-Sulfur Fuel, FGD
	Nitrogen Oxides	0.07 – 0.15 lb/10^6 Btu	LNB, SCR
	Carbon Monoxide	0.10 – 0.15 lb/10^6 Btu	Combustion Controls
Coal - CFB	PM/PM-10 (Filterable)	0.011 – 0.015 lb/10^6 Btu	Fabric Filter
	PM-10 (Filterable + Condensable)	0.011 – 0.028 lb/10^6 Btu	Fabric Filter
	Sulfur Dioxide	0.13 – 0.32 lb/10^6 Btu	CFB, Polishing Scrubber
	Nitrogen Oxides	0.07 – 0.15 lb/10^6 Btu	CFB, SNCR
	Carbon Monoxide	0.10 – 0.27 lb/10^6 Btu	Combustion Controls
Coal - IGCC	PM/PM-10	0.011 – 0.013 lb/10^6 Btu	Combustion Controls
	Sulfur Dioxide	0.032 – 0.17 lb/10^6 Btu	Sulfur Recovery Unit, Acid Gas Absorption
	Nitrogen Oxides	15 ppmvd	LNB, Diluent/Steam Injection
	Carbon Monoxide	15 – 25 ppmvd	Combustion Controls
Combustion Turbine (NG)	Nitrogen Oxides	2.0 – 9 ppmvd @ 15% O_2	LNB, Diluent/Steam Injection, SCR
	Carbon Monoxide	2 – 10 ppmvd @ 15% O_2	Combustion Controls, Oxidation Catalyst
Combustion Turbine (SynGas)	PM/PM-10	0.011 – 0.013 lb/10^6 Btu	Combustion Controls
	Sulfur Dioxide	0.032 – 0.17 lb/10^6 Btu	Sulfur Recovery Unit, Acid Gas Absorption
	Nitrogen Oxides	15 – 25 ppmvd @ 15% O_2	LNB, Diluent/Steam Injection
	Carbon Monoxide	15 – 25 ppmvd @ 15% O_2	Combustion Controls

National Emission Standards for Hazardous Air Pollutants (NESHAP) regulates specific categories of stationary sources that emit (or have the potential to emit) one or more hazardous air pollutants. Exhibit XII-4 and Exhibit XII-5 present NESHAP emission limits for new and existing solid, liquids and gaseous fuel fired combustion units, and combustion turbines and reciprocating engines, respectively. Note that while particulate matter (PM) and carbon monoxide (CO) are not listed hazardous air pollutants (HAP) in Section 112 of the Clean Air Act they are used by the EPA as surrogates for non-mercury metallic and organic HAP emissions, respectively.

Exhibit XII-4 Industrial Boiler NESHAPs

Pollutant	Emission Limit	Governing Regulation
PM (TSM)	0.025 (0.0003) lb/MMBtu	New ICI Boiler, solid fuel, large or small unit
PM (TSM)	0.07 (0.001) lb/MMBtu	Existing ICI Boiler, solid fuel, large unit
PM	0.03 lb/MMBtu	New ICI Boiler, liquid fuel, large or small unit
HCl	0.02 lb/MMBtu	New ICI Boiler, solid fuel, large or small unit
HCl	0.09 lb/MMBtu	Existing ICI Boiler, solid fuel, large unit
HCl	0.0005 lb/MMBtu	New ICI Boiler, liquid fuel, large unit
HCl	0.0009 lb/MMBtu	New ICI Boiler, liquid fuel, small unit
Hg	3 lb/TBtu	New ICI Boiler, solid fuel, large or small unit
Hg	9 lb/TBtu	Existing ICI Boiler, solid fuel, large unit
CO	400 ppm*	New ICI Boiler, solid fuel, large unit
CO	400 ppm*	New ICI Boiler, liquid fuel, large unit
CO	400 ppm*	New ICI Boiler, gaseous fuel, large unit

[Health-based compliance alternatives for HCl and TSM emission limit. Look-up table taking into account chimney height and distance to property boundary. Source still subject to operating and monitoring requirements.]

Large unit - >10 MMBtu/hr
Small unit - ≤ 10 MMBtu/hr
Carbon monoxide (CO) is measured in parts per million (ppm) by volume on a dry basis corrected to 3% oxygen; averaging time is 30-day rolling average
Total Selected Metals (TSM) is the combination of the following metallic HAP: arsenic, beryllium, cadmium, chromium, lead, manganese, nickel, and selenium.
TBtu – trillion Btus (million million Btus)
Source: 40CFR63, Subpart DDDDD, Industrial, Commercial, and Institutional (ICI) Boilers and Process Heaters

Exhibit XII-5 Turbines and Reciprocating Engine NESHAPs

Pollutant	Emission Limit	Governing Regulation
Formaldehyde	91 ppbvd, at 15% oxygen	New Lean Premix, gas or oil-fired CT
Formaldehyde	91 ppbvd, at 15% oxygen	New Diffused Flame, gas or oil-fired CT
Formaldehyde	76% reduction, or 350 ppbvd, at 15% oxygen	Any Spark Ignition, 4SRB RICE >500 bHP
Carbon Monoxide, or	58% reduction, or	New 2SLB RICE >500 bHP
Formaldehyde	12 ppmvd, at 15% oxygen	
Carbon Monoxide, or	93% reduction, or	New 4SLB RICE >500 bHP
Formaldehyde	14 ppmvd, at 15% oxygen	
Carbon Monoxide, or	70% reduction, or	New 4SLB RICE >500 bHP
Formaldehyde	580 ppbvd, at 15% oxygen	

ppmvd – parts per million by volume, on a dry basis
ppbvd – parts per billion by volume, on a dry basis
bHP – Brake Horsepower
4SRB – 4-stroke, rich burn
2SLB – 2-stroke, lean burn
4SLB – 4-stroke, lean burn
CI – Compression Ignition
40CFR63, Subpart YYYY, Stationary Combustion Turbines (CT)
40CFR63, Subpart ZZZZ, Stationary Reciprocating Internal Combustion Engines (RICE)

The primary potential source of air emissions from combustion units using syngas and SNG in the synthetic gas production facilities is the syngas-fired boiler generating steam for the gasifier and oxygen heater. In the Reference Plants with a single operating BGL 1000 gasifier, the boiler is small, with a fuel thermal input of about 46 MMBtu/hr. Therefore, the NSPS small industrial boiler emissions limitations would apply (40CFR60 Subpart Dc). The syngas used in the boiler would have been processed through the AGR in the gasification system; therefore, there should be no difficulty in meeting the sulfur limitation of 0.2 lb/MMBtu. The water wash at the discharge of the BGL gasifier is expected to remove essentially all of the solid particulate matter in the syngas from the gasifier; therefore, the emissions limitations for particulate matter should also be satisfied. It is anticipated that the NOx emissions using syngas as the fuel will be similar to those when using natural gas as a fuel. The U.S. EPA AP-42 indicates that small boilers using natural gas as a fuel typically have a NOx emissions factor lower than the 0.1 lb/MMBtu NSPS limit.

There is limited information regarding the fate of mercury in the gasification process, but the data that does exist from BGL testing indicates that much greater than 90% of the mercury in the coal partitions to the liquor from the wash cooler and syngas coolers. The high end of the range for mercury in Illinois #6 coal is expected to be about 0.12 ppm. At this level, the emissions from combustion equipment using the syngas produced by the BGL gasification process is expected to be less than 0.001 lb/trillion Btu.

The primary potential source of air emissions from combustion in the syngas or SNG production plant with a combined cycle system is the combustion turbine and HRSG. As a result of using the Rectisol process for acid gas removal, the syngas to any of the combustion equipment will have a sulfur concentration equivalent to natural gas, and, thus the SO_2 emissions are expected to be significantly less than regulatory limits. The SO_2 emissions from the combustion turbine in the Syngas to Power Reference Plants are expected to be less than 0.005 lb/MMBtu, and from the turbine in the SNG to Power Reference Plant less than 0.002 lb/MMBtu.

NOx emissions from the GE 6FA combustion turbine in the Syngas to Power Reference Plant are expected to be about 15 ppmvd at 15% O_2 with the use of nitrogen dilution in the combustor.[g] Because of the low sulfur level in the syngas afforded by use of the Rectisol AGR, if lower NOx emissions are required, SCR could be added.

CO emissions from the turbine are expected to be about 25 ppmvd at 15% O_2 without use of an oxidation catalyst.[g] If site-specific regulations require a lower emission rate, then an oxidation catalyst could be added without concern because of the low sulfur content of the fuel. Particulate emissions are expected to be similar to those with natural gas firing.

The NOx, CO, and particulate emissions from the FT8 combustion turbine fired on SNG are expected to be similar to those when the gas turbine is fired on natural gas. Depending on the location of the plant, NOx and CO reduction technologies may be required to meet site-specific regulatory requirements.

One of the advantages of the Rectisol process used in the Reference Plant designs is that it deep cleans CO_2 from the syngas. This is

[g] Estimates are based on information that WorleyParsons has with respect to the GE 6FA fired on syngas and have not been verified by General Electric for the specific syngas from the project reference system with BGL gasifier and Rectisol AGR.

particularly important for SNG production. In the non-site specific Syngas and SNG Production Reference Plants in this study, the CO_2 laden stream is mixed with the syngas prior to using it as fuel in the boiler generating steam for the gasifier. In the combustion turbine syngas refueling application, it is used as a diluent in the syngas to the combustion turbine. In the combustion turbine SNG refueling application, it is mixed with SNG being used as supplemental fuel in the HRSG. However, if site-specific conditions warrant, then the Rectisol process allows for consideration of CO_2 sequestration. The CO_2 emissions from the combustion turbine refueling Reference Plants are expected to be between 1900 lb/MWh and 2,400 lb/MWh. The sequestration of the CO_2 from the Rectisol process could reduce these emissions by about 60%.

In all of the coal-gasification plants a source of particulate emissions will be the coal receiving, storage, and handling area, and appropriate dust control measures will have to be taken. Depending on site-specific conditions, covered or closed coal storage may be required to meet emissions regulations. Also in all of the coal-gasification plants, flare emissions during start-up, shut-down, and upsets in the coal gasification, cleanup, and syngas-fired systems may be significant.

XII.2 INDUSTRIAL CUSTOMER

This section provides information regarding the permit requirements applicable to existing sources that switch to syngas, assuming that the gasification facility is not located on the industrial customer's site.

Potential industrial customers are probably not currently permitted to burn syngas as a fuel; therefore, they will probably have to go through some type of permitting process. If the refueling will not result in significant emissions increases, as defined in 40CFR52.21, then the repermitting process will be relatively simple, taking on the order of three to six months. The definition of significant increase for specific emissions is shown in Exhibit XII-6. If the refueling will result in significant emissions increases, then the combustion unit will be subject to New Source Review (NSR), including Prevention of Significant Deterioration (PSD) and non-attainment NSR. The repermitting process will then be more complicated, and will likely take nine to eighteen months, at a significantly higher cost. The types of activities that will probably be required if significant increases in emissions are expected include:

- Collection of on-site meteorological data

- Ambient air quality monitoring
- Air quality dispersion modeling
- Installation of BACT (if in an attainment area) or LAER (if in a non-attainment area) technology
- Purchase of emissions reductions credits if in a non-attainment area

New Source Performance Standards (NSPS) has a whole section devoted to what a modification is (40CFR60.14). There are also similar requirements in the Prevention of Significant Deterioration (PSD) regulations (40CFR51.166). The following portions of the regulations dealing with use of an alternative fuel are taken out of context from these regulations. However, in general NSPS would not be applicable, if hourly emissions do not increase; nor PSD requirements, if annual emissions do not increase significantly.

Exhibit XII-6 PSD/NSR Significant Net Emissions Rate Increase

POLLUTANT	EMISSION RATE (TONS PER YEAR)
Carbon Monoxide	100
Nitrogen Oxides	40
Sulfur Dioxide	40
Particulate Matter (PM/PM10/PM2.5)	25/15/10
Ozone (VOC)	40 (of VOCs)
Lead	0.6
Fluorides	3
Sulfuric Acid Mist	7
Hydrogen Sulfide (H_2S)	10
Total Reduced Sulfur Compounds (incl. H_2S)	10

From 40CFR60.14(e), "The following shall not, by themselves, be considered modifications under this part: … (4) Use of an alternative fuel or raw material if the existing facility was designed to accommodate that alternative use. A facility shall be considered to be designed to accommodate an alternative fuel or raw material if that use could be accomplished under the facility's construction specifications as amended prior to the change..." So if a new burner has to be added to burn the syngas and hourly emissions increase, NSPS would be applicable to the source. Regardless, a revision to the permit will have to be made in order to burn an alternative fuel.

The PSD regulation have similar definitions/requirements contained in 40CFR51.166(b)(2)(i). "*Major modification* means any physical change in or change in the method of operation of a major stationary source that would result in a significant emissions increase … of a regulated NSR pollutant … ; and a significant net emissions increase of that pollutant from the major stationary source." Further, (iii) "A physical change or change in the method of operation shall not include: … (*e*) Use of an alternative fuel or raw material by a stationary source which: (*1*) … unless such change would be prohibited under any federally enforceable permit condition; or (*2*) The source is approved to use under any permit issued under…" PSD regulations.

The following presents a summary of the reconstruction regulations (See 40 CFR 60.15 for actual wording, the following is paraphrased): "An existing facility, upon reconstruction, becomes an affected facility, irrespective of any change in emission rate. "Reconstruction" means the replacement of components of an existing facility to such an extent that: (1) The fixed capital cost of the new components exceeds 50% of the fixed capital cost that would be required to construct a comparable entirely new facility, and (2) It is technologically and economically feasible to meet the applicable standards set forth in this part. "Fixed capital cost" means the capital needed to provide all the depreciable components."

The modification and reconstruction provisions of NSPS are independent. The former provisions are intended to apply in circumstances where physical or operational changes which increase emissions make NSPS coverage appropriate at levels well below 50% of the capital cost of a replacement unit. Conversely, the reconstruction provisions are aimed at changes to an existing unit irrespective of associated emissions increases, but trigger NSPS requirements only if the higher 50% level is reached.

If there is doubt about applicability, the Administrator will make a determination of whether action taken or intended to be taken by such owner or operator constitutes construction (including reconstruction) or modification or the commencement thereof within the meaning of this part.

With the use of the Rectisol process for acid gas removal in the syngas production facility, it is not expected that an industrial user's hourly or annual SO_2 emissions would increase relative to those of the equipment fired with natural gas. It is anticipated that NOx, CO, and particulate emissions when using the syngas or SNG from the

BGL based gasification process will also be similar to those when firing natural gas. Therefore, it is not anticipated that either NSPS or PSD requirements will be applicable for the industrial user of the syngas or SNG.

This page is intentionally left blank

XIII CONCLUSIONS AND RECOMMENDATIONS

A feasibility study was performed to evaluate the technical and economic viability of coal-derived syngas and SNG refueling of U.S. industries using the British Gas Lurgi (BGL) gasification technology fueled with an Eastern bituminous coal and a PRB coal. The study included:

- Development of an energy demand profile for potential Industrial customers.
- Research of potential fuel sources and process by-products for the project system.
- Development of a base gasification and gas clean-up design.
- Development of a Design Requirements Document.
- Development of conceptual designs and cost estimates for Reference Plants for the production of syngas, production of SNG, and combustion turbine combined cycle refueling with syngas and SNG from coal gasification.
- Investigation of potential environmental impact and applicable environmental regulations.

Results of the study show that there is a need for an industrial size coal gasification system to take advantage of the abundant, price-stable coal resources in the U.S. to provide a coal-derived substitute for natural gas to U.S. Industries. The study also shows that a BGL gasifier based system can provide this need with a fuel-flexible, efficient, environmentally safe system satisfying the anticipated environmental regulations.

The following additional evaluations are recommended based on the results of this study:

1. Perform conceptual designs and cost estimates for the Reference Plants producing syngas and SNG from other low-rank western coals including lignite.

2. Perform conceptual designs and cost estimates for Reference syngas and SNG production plants using multiple gasifiers to

quantify the reduction in cost per MMBtu afforded by economies of scale associated with larger, downstream gas cleanup and conversion systems.

3. In support of the U.S. DOE initiatives in hydrogen-fired turbine technology and carbon sequestration, it is recommended to perform conceptual designs and cost estimates for a syngas/hydrogen production plant employing water-gas shift reaction to increase the quantity of hydrogen produced to a level consistent with turbine suppliers.

4. Perform financial analyses of the Reference Plants using NETL's NETLFM financial model with financial factors representative of U.S. Industry as opposed to financial factors representative of electric utilities that have typically been used for IGCC evaluations.

5. The EIA updates the Manufacturing Energy Consumption Survey (MECS) every four years, and the last survey was in 2002. Therefore, these data were used in the evaluation of the potential customer demand profile for this study. The new EIA MECS is expected this year (2006), and it is recommended that the demand profile be updated based on the 2006 MECS when the data is published.

XIV REFERENCES

[1] "Quality Guidelines for Energy System Studies." Prepared by Office of Systems and Policy Support. February 24, 2004.

[2] U.S. Department of Energy, Energy Information Administration. DOE/EIA Report No. 0383(2006).

[3] U.S. Department of Energy, Energy Information Administration, 2002 Manufacturing Energy Consumption Survey (MECS). http://www.eia.doe.gov/emeu/mecs/mecs2002/data02/shelltables.html.

[4] Energy Information Administration Annual Energy Review 2004. Posted August 15, 2005 . http://www.eia.doe.gov/emeu/aer/txt/stb0605.xls.

[5] Energy Information Administration. Report No. DOE/EIA-0383 (2006). http://www.eia.doe.gov/oiaf/aeo/excel/aeotab_2.xls.

[6] IHS Inc. 2005 Major Industrial Plants Database (MIPD).

[7] March 2002 CD from http://www.platts.com/udidata/.

[8] Gasifying Domestic Waste. Hansjobst Hirschfelder, Envirotherm GmbH. 7th European gasification Conference April 25-27th, 2006, Barcelona Workshop.

[9] USGS Resource Assessments

[10] EIA Coal and News Markets. February 6, 2006.

[11] Energy Publishing, LLC Domestic & International Petcoke Report. May 2005.

[12] Foster Wheeler. "Firing Refinery By-products in CFB Steam Generators.

[13] U.S. EPA 2003 data.

[14] "Regulation Impacts on Scrap Tire Combustion: Part II." Air Currents. Marc Karell, PE, Malcolm Pirnie. February 2000 – Section 1. http://www.pirnie.com/resources_pubs_air_feb00_3.html.

[15] Proprietary report. 2006.

[16] U.S. Environmental Protection Agency. Municipal Solid Waste Basic Facts. March 7, 2006.

[17] Energy Recovery from New York City Solid Wastes. Nickolas J. Themelis, Young Hwan Kim, Mark H. Brady. Earth Engineering Center, Columbia University, New York, NY. ISWA Journal: Waste Management and Research, 2002:20, 223-233.

[18] Energy Data. State of Connecticut Office of Policy and Management. May 9, 2006. http://www.opm.state.ct.us/pdpd2/energy/flows94.htm.

[19] Coal-Based Power Generation for California with CO_2 Removed for Use in Enhanced Oil Recovery. Prepared for the United States Department of Energy National Energy Technology Laboratory by Parsons. Parsons Report No. EJ-2002-10. December 2002.

[20] National Hydrogen Energy Roadmap. U.S. Department of Energy. November 2002.

[21] Today's Hydrogen Production Industry. U.S. Department of Energy. http://www.fossil.energy.gov/programs/fuels/hydrogen/currenttechnology.html

[22] Twenty Hydrogen Myths. Amory B. Lovins, CEO Rocky Mountain Institute. February 2005. http://www.rmi.org/images/other /Energy/E03-05_20HydrogenMyths.pdf.

[23] Chemical Market Reporter. The Innovation Group (TIG). Chemical Profile on Hydrogen. February 24, 2003.

[24] Hydrogen Applications in Refineries. Linde Gas. www.linde-gas.com/International /Web/LG/COM/likelgcomn.nsf/DocByAlias/ind_h2refineries.

[25] Industrial Gases in the Chemical Industry. Linde Gas. http://www.linde-gas.com/International/Web/LG/COM/likelgcomn.nsf/repositorybyalias/pdf_chemistry_e.pdf.

[26] Survey of Economics of Hydrogen Technology. Technical Report. C.E. Gregoire Padro and V. Putsche. NREL/TP-570-27079. September 1999.

[27] U.S. Geological Survey, Mineral Commodity Summaries, January 2005, http://minerals.usgs.gov/minerals/pubs/commodity/sulfur/

[28] USGS Sulfur Statistics and Information. Materials Flow of Sulfur. OF-02-298. Joyce A. Ober

[29] Minerals Commodity Summaries, Sulfurr,2006. U.S. Geological Survey. http://minerals.usgs.gov/minerals/pubs/commodity/sulfur/sulfumcs06.pdf

[30] Sulfur. Joyce A. Ober. U.S. Geological Survey 2004 Minerals Yearbook. http://minerals.usgs.gov/minerals/pubs/commodity/sulfur/sulfumyb04.pdf

[31] Lurgi AG. The Rectisol Process. http://www.lurgi.com/website/fileadmin/pdfs/brochures/Br_Restisol.pdf

[32] Email. Gary Gray (UOP LLC) to Bradley W Studt (WorleyParsons) RE: Selexol Inquiry. December 06, 2005.