Water Conserving Steam-Ammonia Power Cycle

Donald C. Erickson

Energy Concepts Co.

DOE SBIR Phase II Project

DE-FG02-05ER84201

NETL Existing Plants Water Projects Meeting

October 27, 2008

OUTLINE

- Nexus of Water, Energy, and Climate
- Higher Efficiency, Lower Temperature Cycles Conserve Water <u>and</u> Energy
- Steam-Ammonia Absorption Power Cycle
- Demonstration Project in Kotzebue, Alaska
- Water Conserving Aspects

The Triple Alliance

Encounters

The Triple Crisis

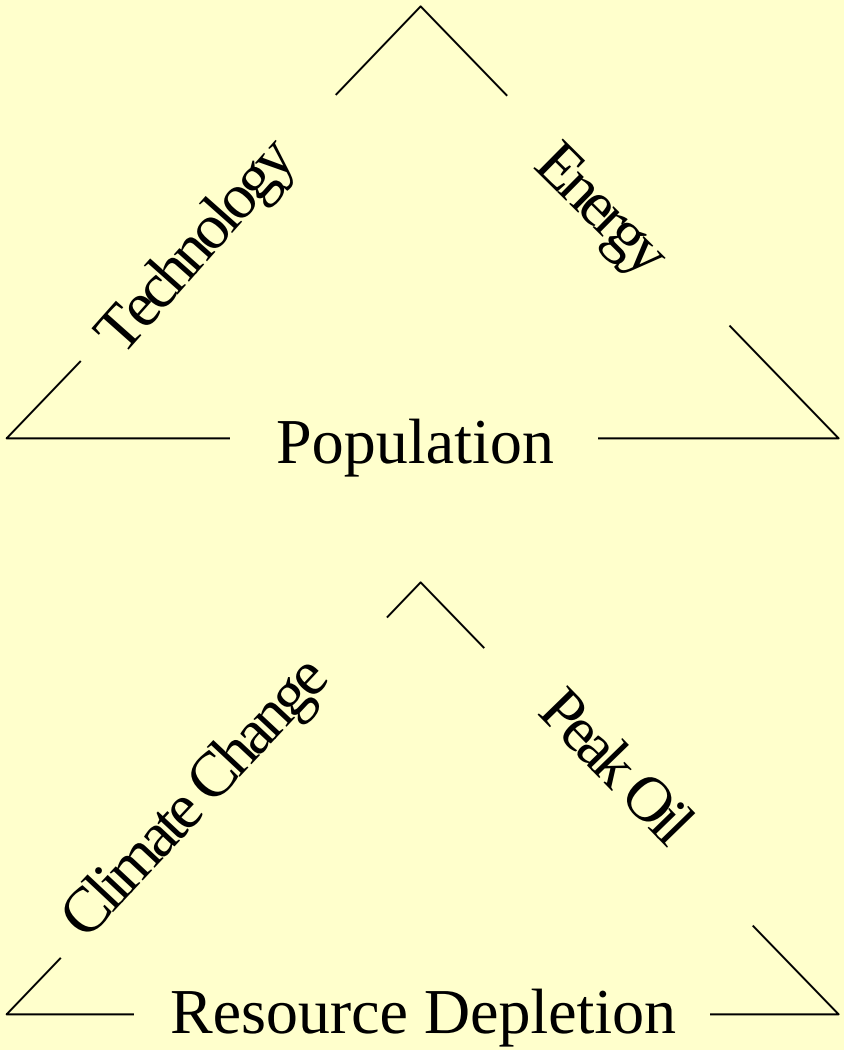

CONTEXT

- Ultimate question - carrying capacity
- Current ecological footprint - 1.5 planets
- Two/thirds of global population have unacceptably low living standard
- “Economic growth” paradigm exacerbates the crisis
- Sustainable paradigm - economic stability plus rapidly shrinking ecological/carbon footprint

Objectives

- Conserve Water and Energy
  - Higher efficiency saves energy
  - Reduced heat rejection saves water
  - Higher efficiency reduces CO2
  - Saved energy can be used to reclaim waste water
- Concentrate on low temperature waste heat
  - Between 160°F and 300°F (>90°F above ambient)
  - Exceedingly large and under-utilized resource

APPROACH
Steam Ammonia Absorption Power Cycle

- Why the Absorption Power Cycle is Preferred
  - vs Organic Rankine Cycle
    - glide match for higher efficiency
    - smaller, lower cost turbine
    - smaller, lower cost heat exchangers
  - vs the Kalina Cycle
    - avoids total condensation (corrosion problem)
    - higher performing components
    - no need for “DCSS”

Power Cycle Comparison

Rankine

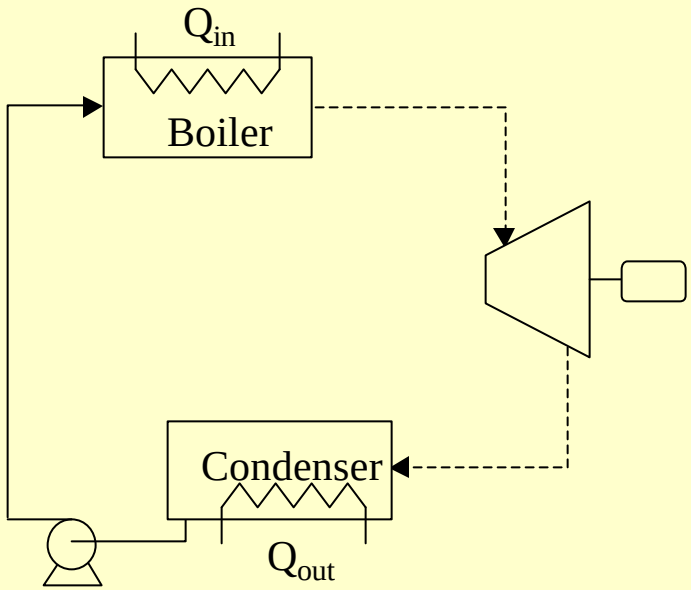

Absorption

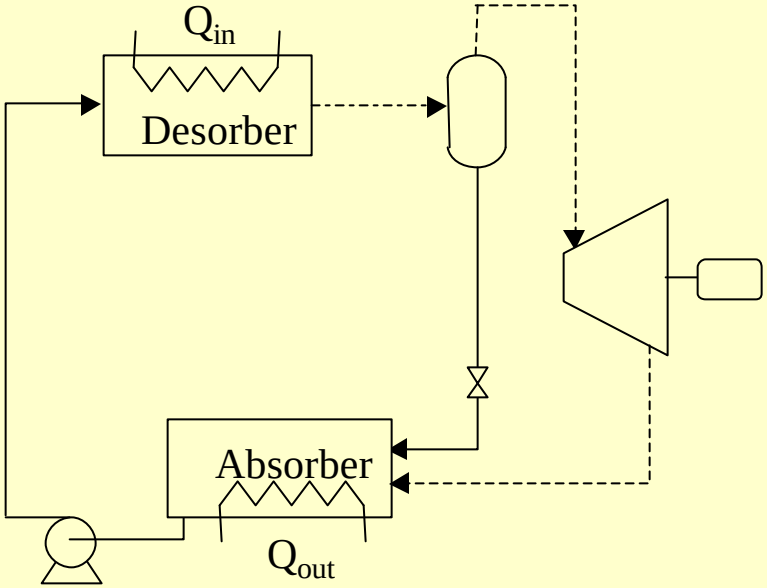

APPROACH
Steam-Ammonia Absorption Power Cycle

- Why aqueous ammonia is the preferred working fluid
  - superior transport properties
  - optimal pressures
  - non-corrosive to low cost materials
  - high latent heat
  - less than half the heat transfer surface

Working Fluid Properties
Condensing at 35°C (95°F)

		H_2O	NH_3	Propylene	R134a
Pressure	[bar]	0.06	13.5	14.7	8.9
	[psia]	0.82	196	214	129
Latent Heat	[J/g]	2418	1122	314	168
	[Btu/lb]	1039	483	135	72
Density [kg/m^3]	Liquid	994	588	486	1168
	Vapor	0.04	10.5	31.5	43.4
Liquid Thermal Conductivity [W/m-K]		0.611	0.457	0.107	0.078
Liquid Heat Capacity [J/g-K]		4.183	4.873	2.775	1.466
Liquid Viscosity [10^{-6}, kg/m-s]		720	120	83	172
Condensation-side Coefficient [W/m^2-K]		3021	2417	587	517
Water-side Coefficient [W/m^2-K]		5000	5000	5000	5000
Overall Coefficient [W/m^2-K]		1883	1629	526	468

$$h_{condensation} = 0.729\left[\frac{g\rho_l(\rho_l - \rho_v)k_l^3 h_{fg} + 0.68c_{p,l}(T_{sat} - T_{surface})}{N\mu_l(T_{sat} - T_{surface})D}\right]^{1/4}$$

where, $T_{sat} - T_{surface} = 10$ K

$N = 100$

$D = 1$ [inch]

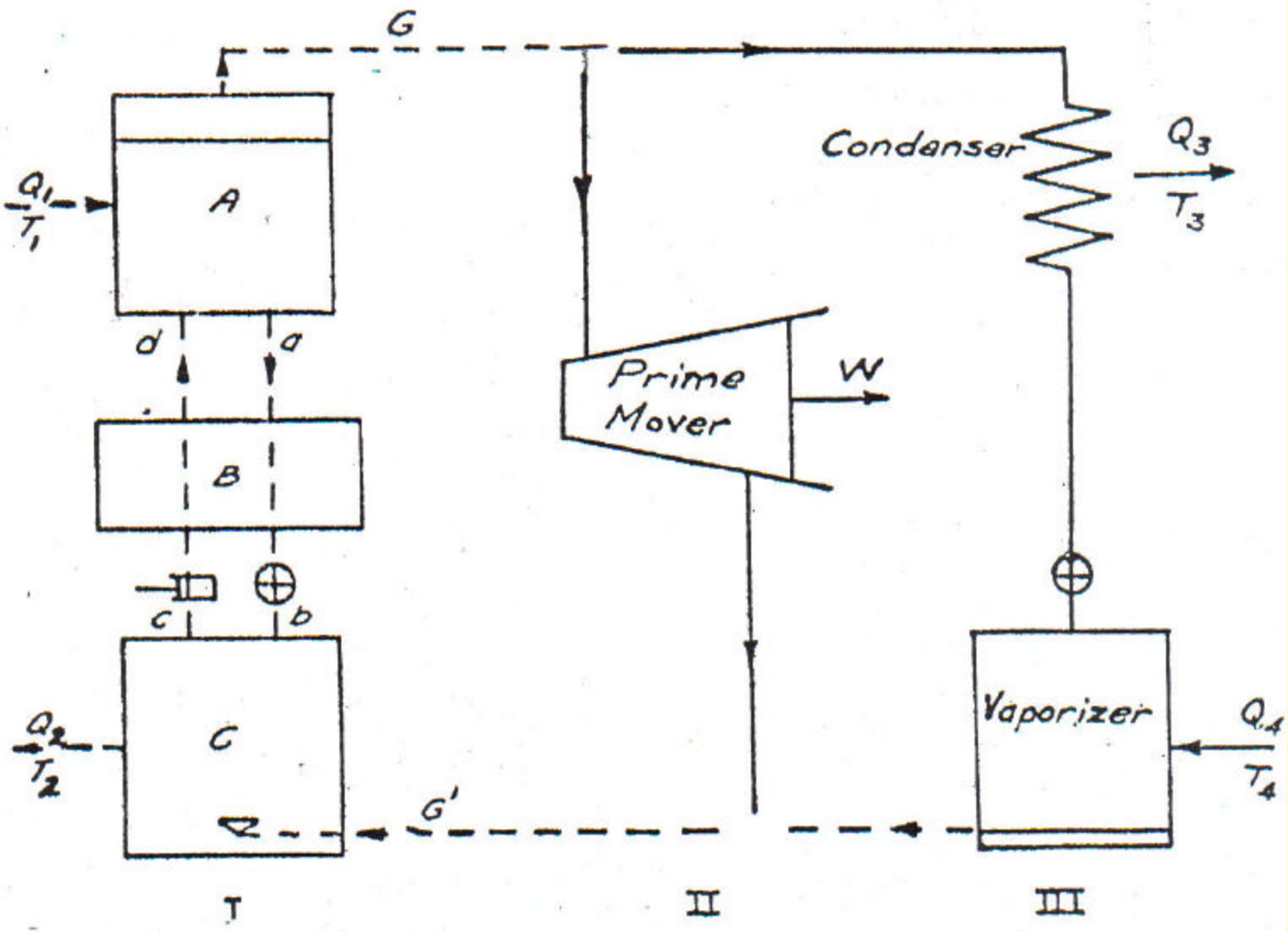

FIG. 2. Elementary Solution Cycle.
I.—Basic Solution Thermo-Compression Process; II.—Power Process; III.—Refrigeration Process.

See U 340

THE HONIGMANN FIRELESS LOCOMOTIVE ENGINE.

Fig. 6.

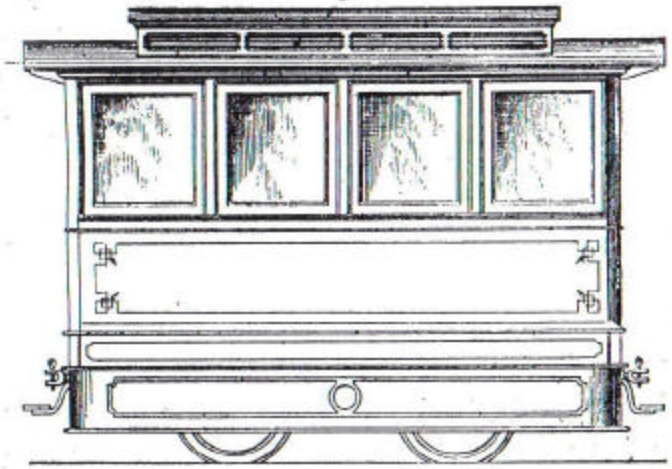

Fig. 5.

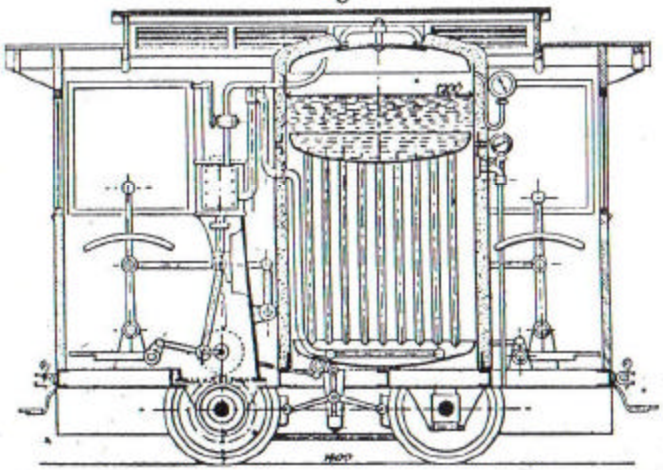

Fig. 1

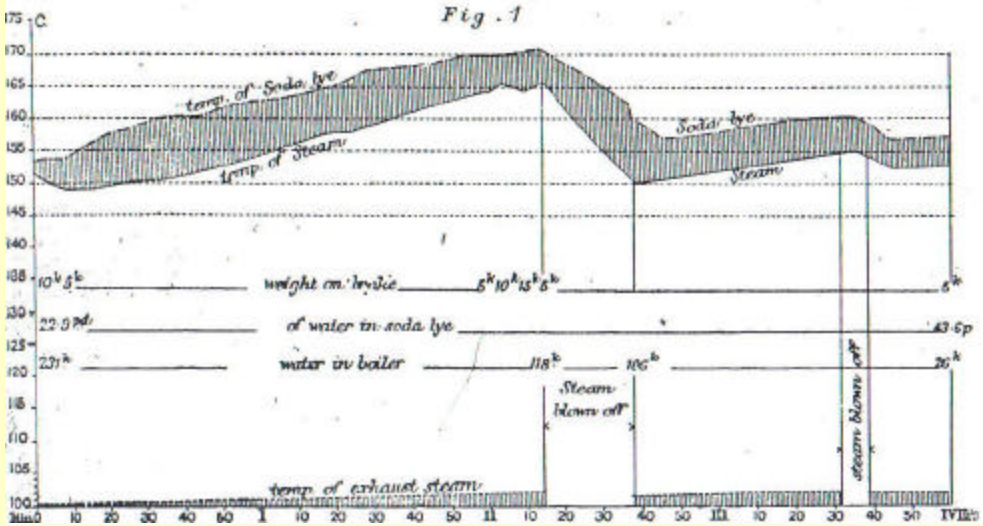

Fig. 2.

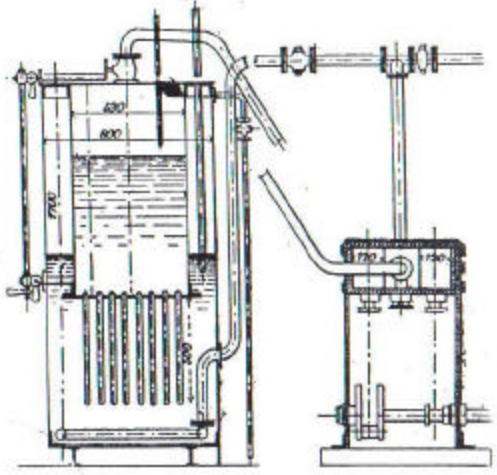

also
4195485
4307572

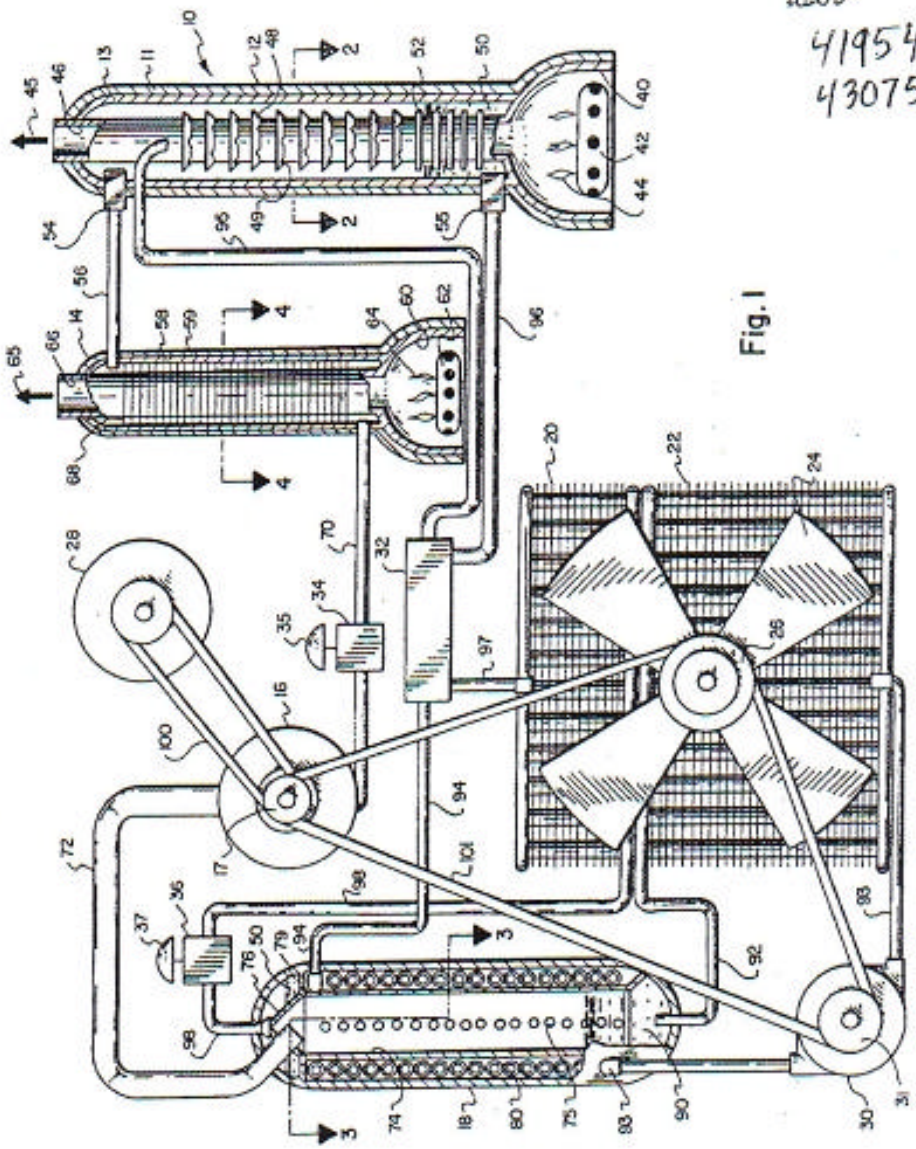

Fig. 1

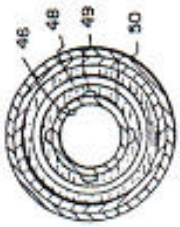

Fig. 2

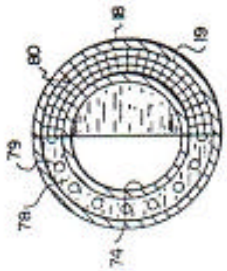

Fig. 3

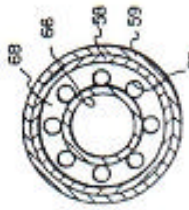

Fig. 4

Absorption Power Cycle

- Optimal pressures - compact, economical equipment
- Glide-matching heat input
- Glide-matching heat rejection - more efficient, and conserves water
- Uses more of the glide heat (system efficiency vs cycle efficiency)

Qualitative Power Cycle Comparison

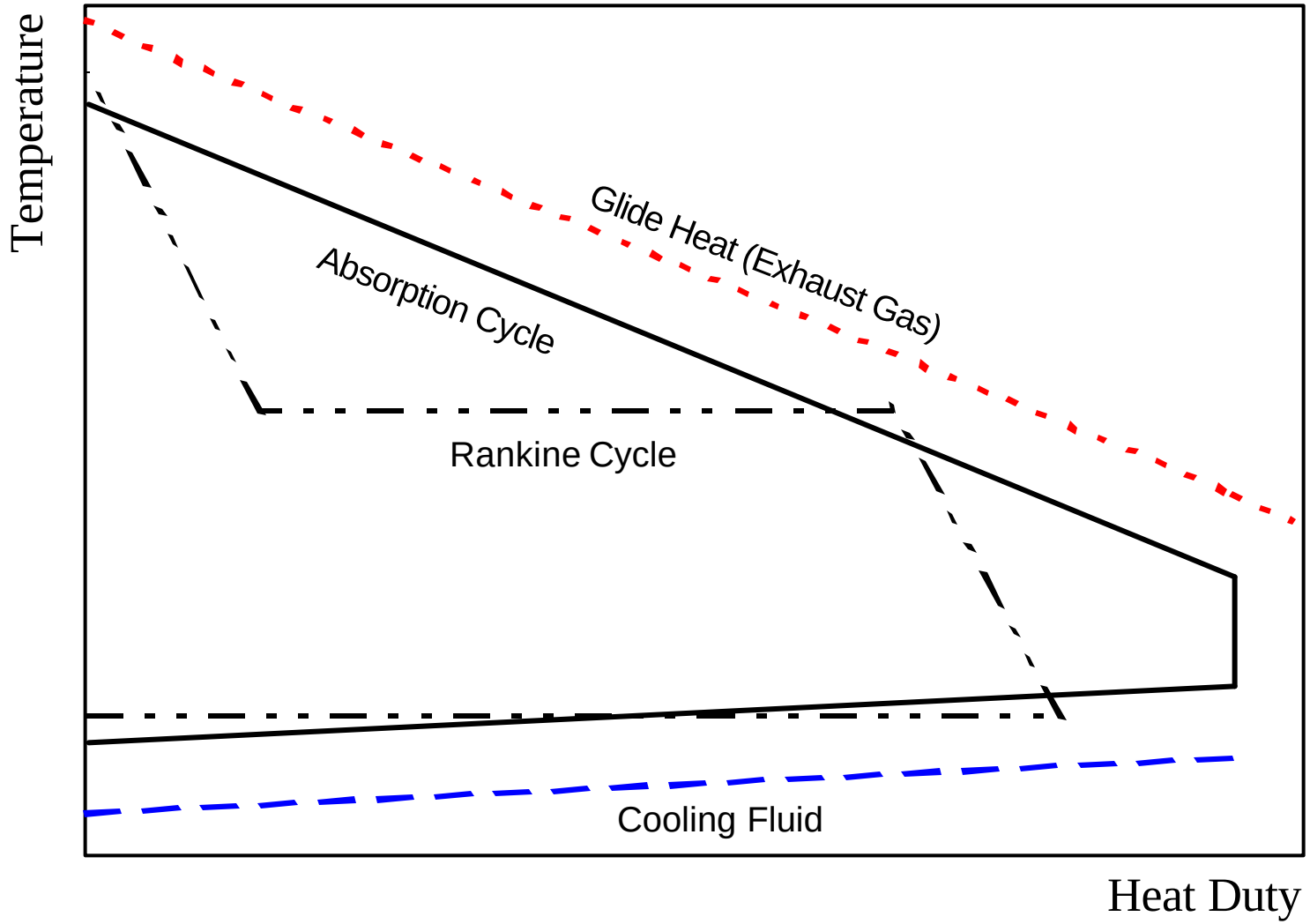

(WASTE) HEAT SOURCES FOR ABSORPTION POWER CYCLES

- Prime mover exhaust
- Boiler/furnace/kiln exhaust
- Process fluids
- Geothermal heat
- Solar thermal heat

Dual Function Absorption Cycle

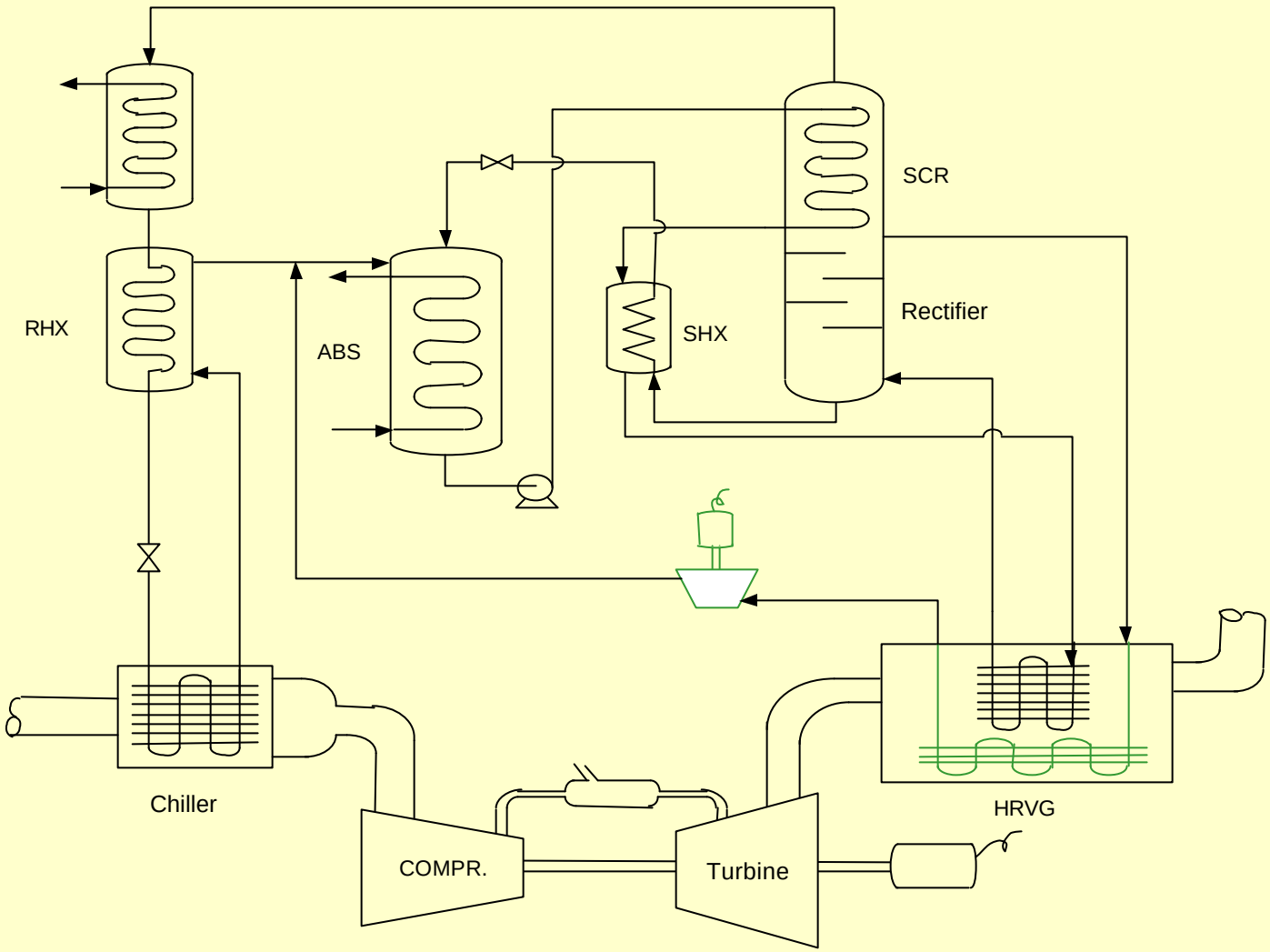

Avenal Power Plant: Modified System

5/4/2007

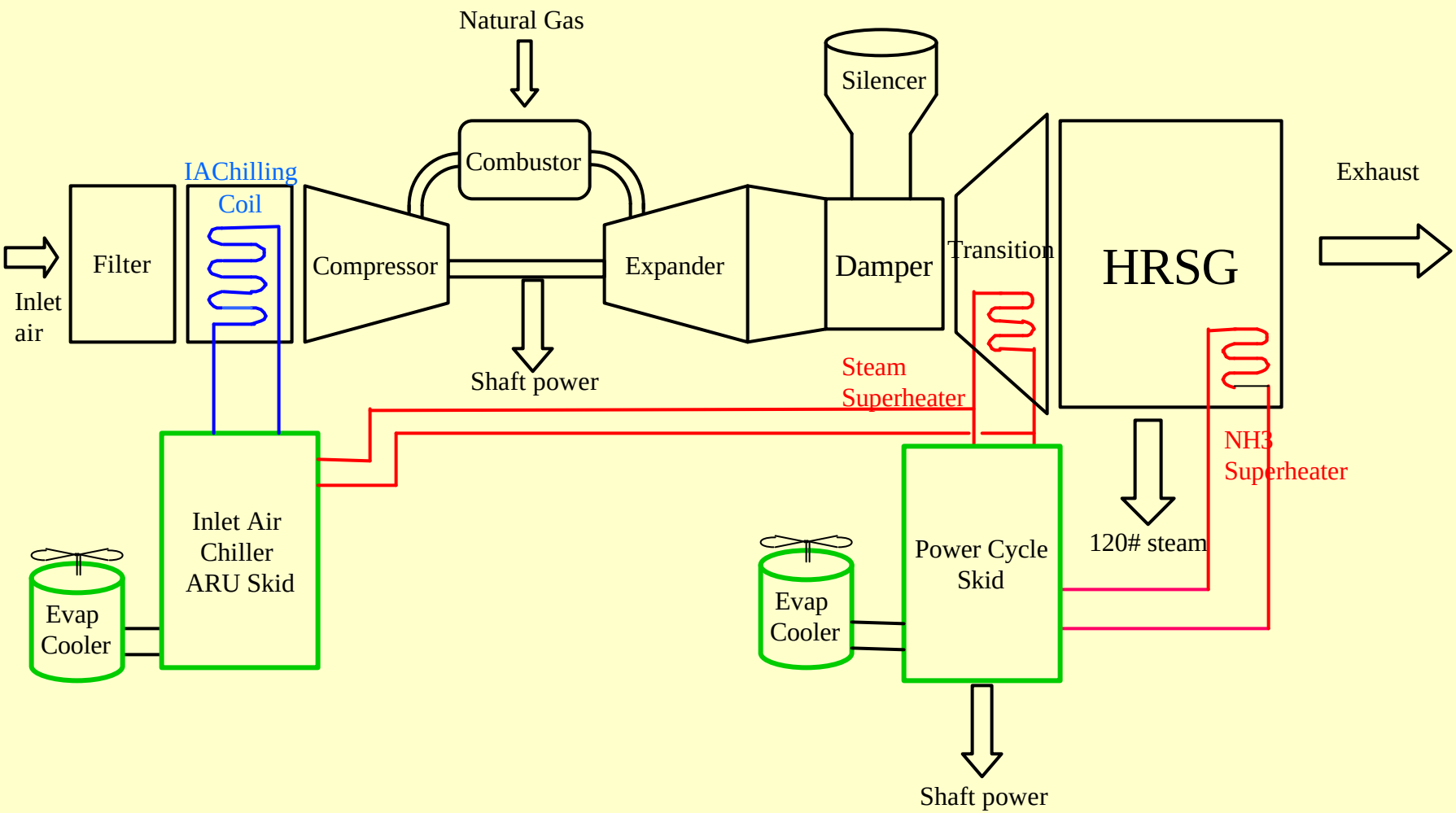

DEMONSTRATION PLAN

- Design, build, and test 25 kW laboratory prototype APC
  - validate performance of single rotor helical screw expander
- Field demonstrate 150 kW APC at Kotzebue Electric Association
  - 180°F jacket water heat source
  - generic application useful at many other sites
  - Alaska Energy Authority interest
  - KEA is an early adopter - has implemented numerous other advanced energy efficiency and renewable energy projects

Kotzebue-APC

10/6/08

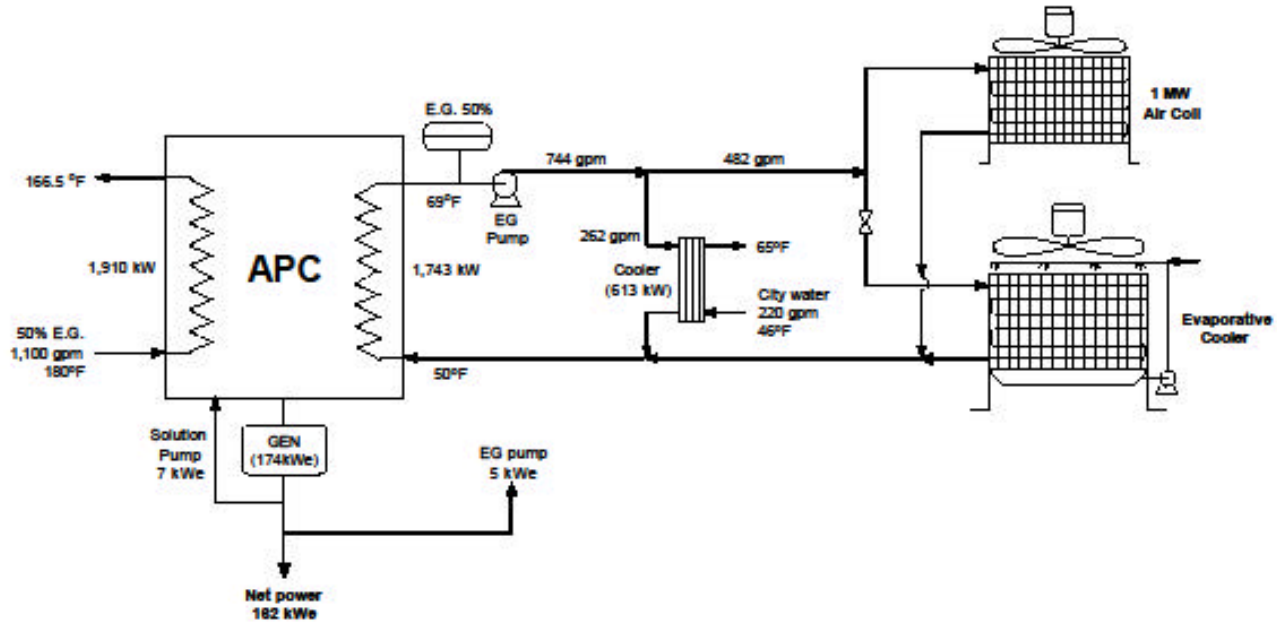

Air Flow Required for Power Cycle Heat Rejection - Dry Cooling vs Wet Cooling

- Six times more for same condensing pressure
- Three times more for max power production
- Coolant glide doubles (40 vs. 20 ? F)
- ~ 3% penalty on heat rate

WATER CONSERVATION ASPECTS

- Opportunity cooling
  - one third of heat rejection to city water
  - reduces energy used by city residents to make hot water
- Damp cooling
  - dry radiator cooling most of year
  - wet cooling tower cooling only on hottest days of summer

CONCLUSIONS

- The century-old absorption power cycle is being re-constituted
- The APC excels at converting low temperature waste heat to power
- The planned 150 kW demonstration at Kotzebue Electric Association will convert 180°F jacket heat to power at 9% efficiency
- Water will be conserved by opportunity cooling and by damp cooling

Effect of Damp Cooling

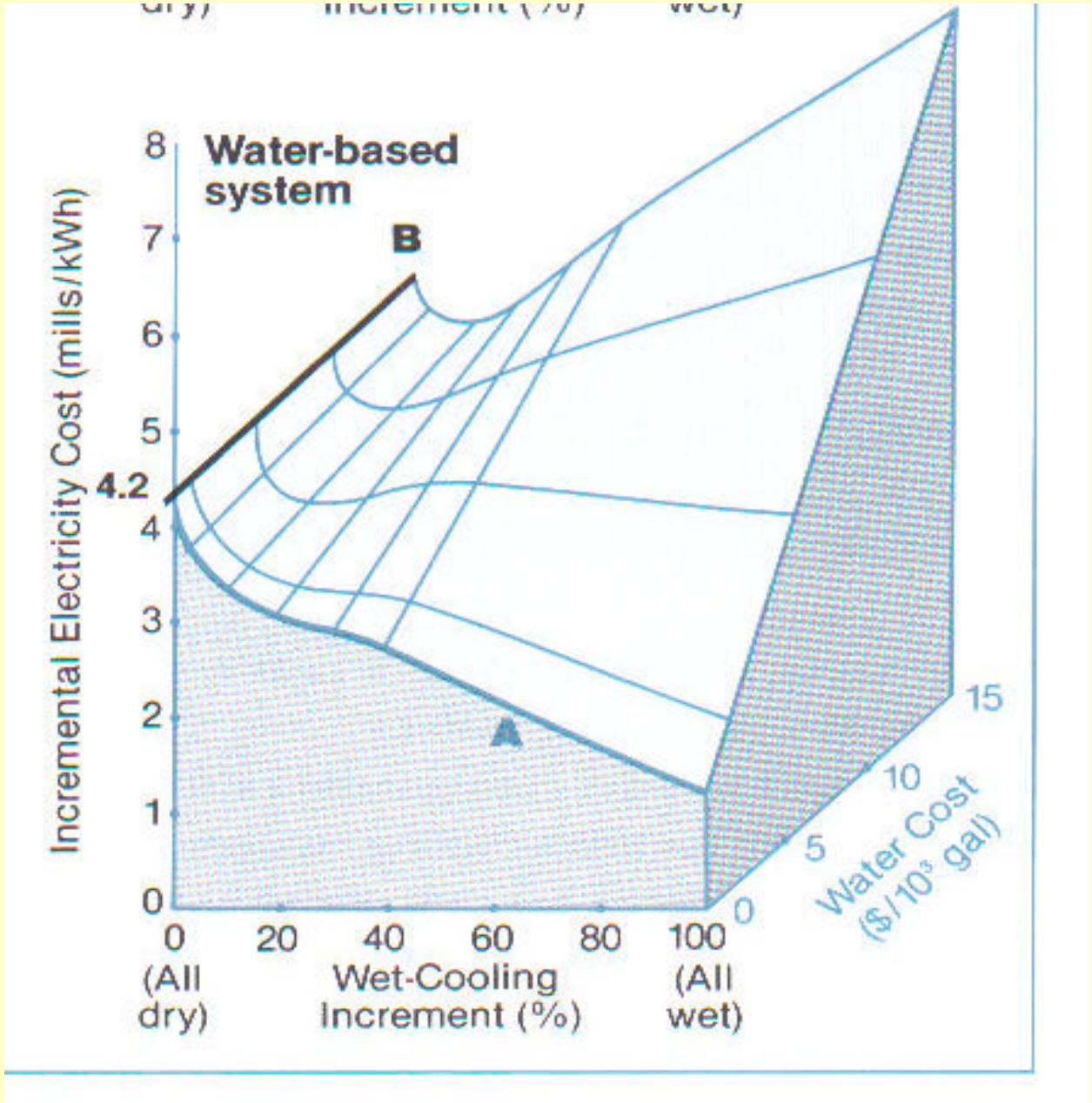

Steam-Ammonia Power Cycle

- Two Rankine cycles with two interconnections
- Adds superheater and economizer
- Major system efficiency gain due to glide matching
- Each working fluid stays within its optimum range
- Patented

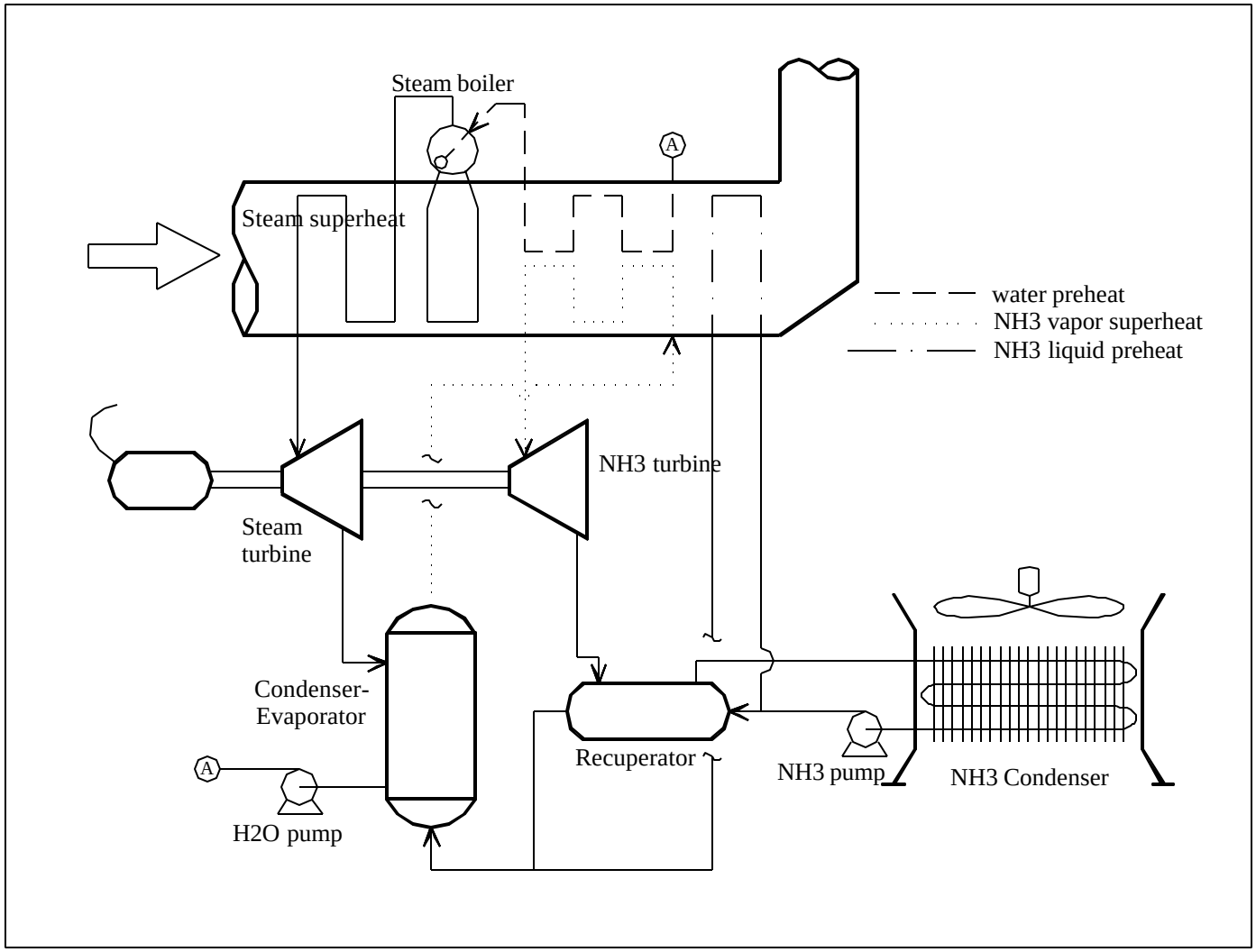
Steam boiler
A
Steam superheat
water preheat
NH3 vapor superheat
NH3 liquid preheat
NH3 turbine
Steam
turbine
Condenser-
Evaporator
Recuperator
NH3 pump
NH3 Condenser
A
H2O pump

Limitations of Steam Power Plants with Low Temperature Glide Heat

- Deep vacuum - large and costly components
- Boiling temperature selection - Hobson's choice
- Condensing temperature - similar tradeoff