Fifth Annual Conference on Carbon Capture & Sequestration

Steps Toward Deployment

Capture Technologies (2)

Evaluation of A Novel Integrated Process for CO_2 Capture from Post-Combustion Flue Gases

Shiaoguo Chen[1], Yongqi Lu[2], Massoud Rostam-Abadi[1,2]

[1] Illinois State Geological Survey
[2] University of Illinois at Urbana Champaign

May 8-11, 2006 • Hilton Alexandria Mark Center • Alexandria, Virginia

---

MEA Process

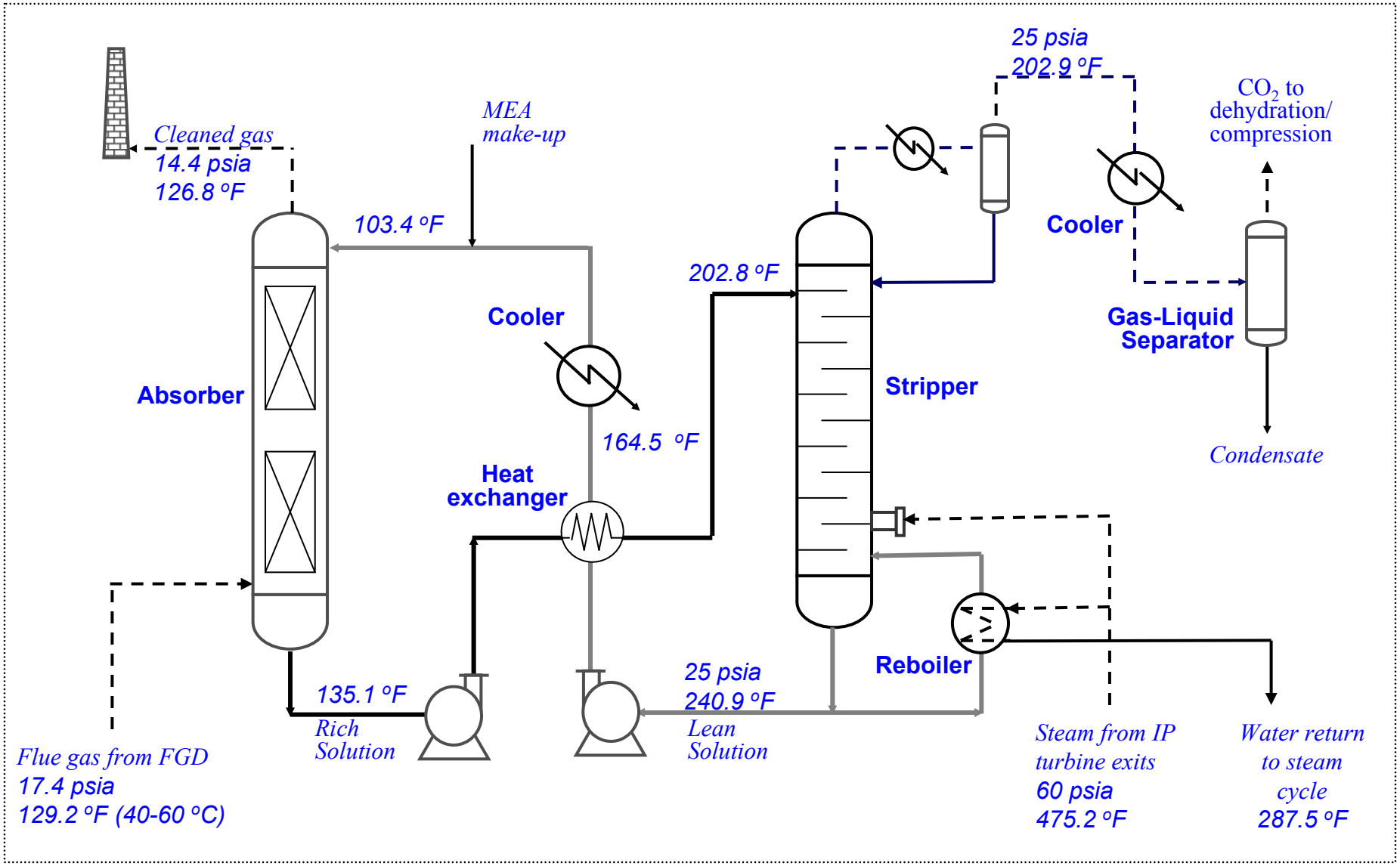
Cleaned gas
14.4 psia
126.8 °F
MEA
make-up
103.4 °F
Absorber
Cooler
164.5 °F
Heat
exchanger
202.8 °F
25 psia
202.9 °F
Stripper
Cooler
CO_2 to
dehydration/
compression
Gas-Liquid
Separator
Condensate
Reboiler
135.1 °F
Rich
Solution
25 psia
240.9 °F
Lean
Solution
Flue gas from FGD
17.4 psia
129.2 °F (40-60 °C)
Steam from IP
turbine exits
60 psia
475.2 °F
Water return
to steam
cycle
287.5 °F

Steam Usage in MEA Regeneration

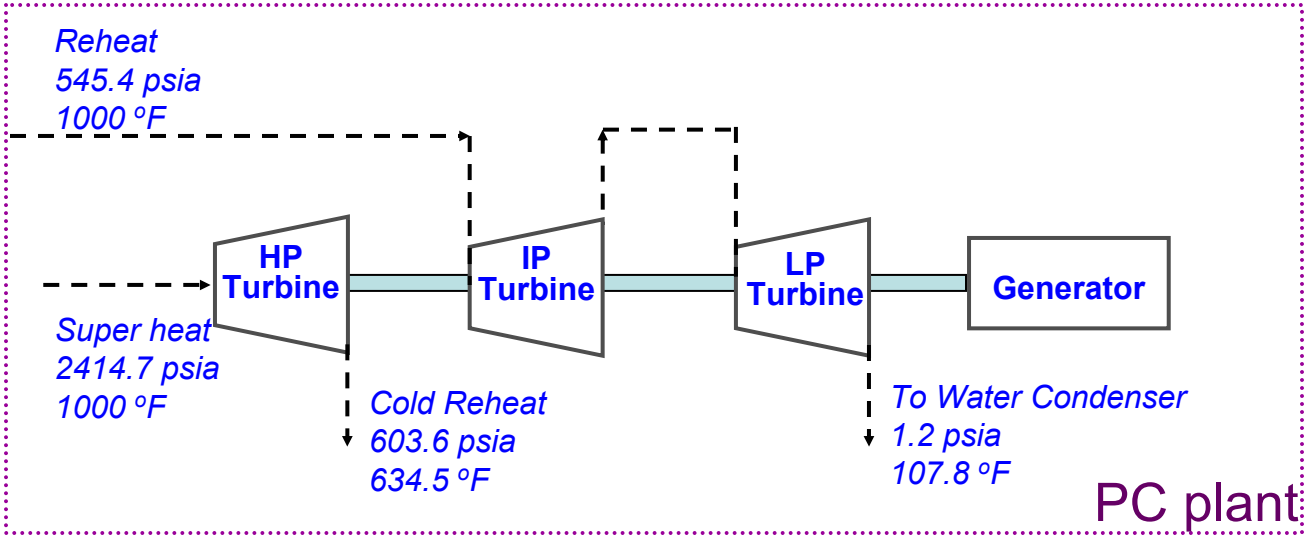

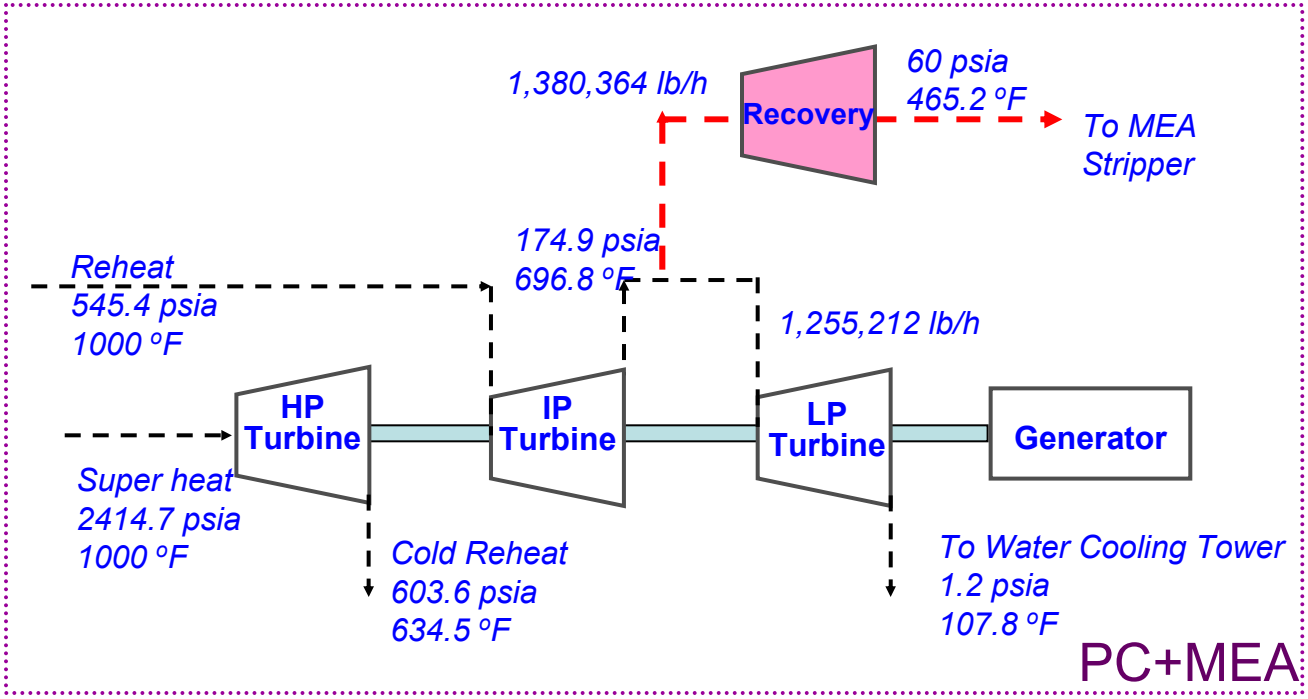

Turbine generations in a 533 MW (gross) plant

	PC	PC+MEA
HP	150.6	150.6
IP	124.7	124.7
LP	**257.9**	**122.8**
Recover		42.7
Total	533.2	440.9
Electricity loss		**92.3**

Heat Balance in a PC Power Plant

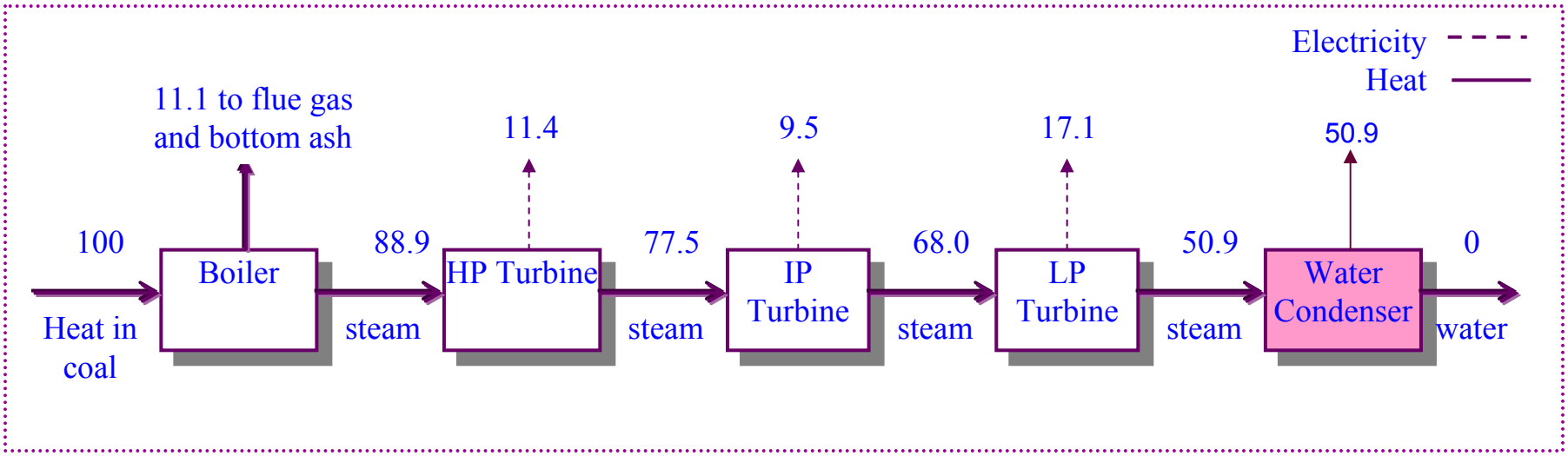

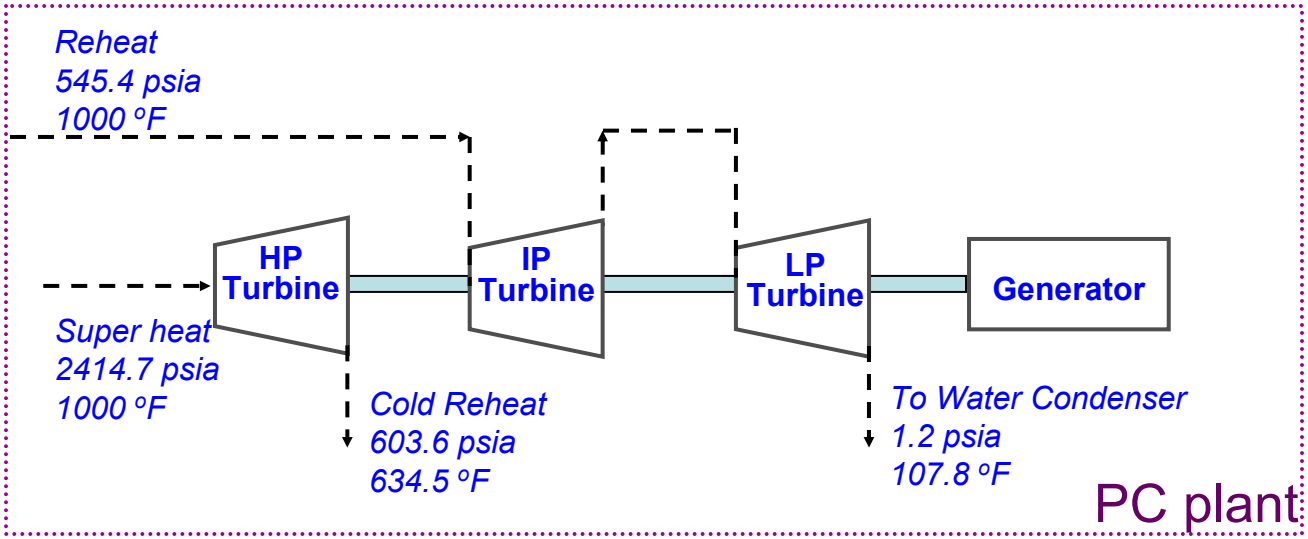

- *~1/2 of the heat is released to surrounding in water condenser*

How to Integrate Low-Quality Steam Use in Absorption?

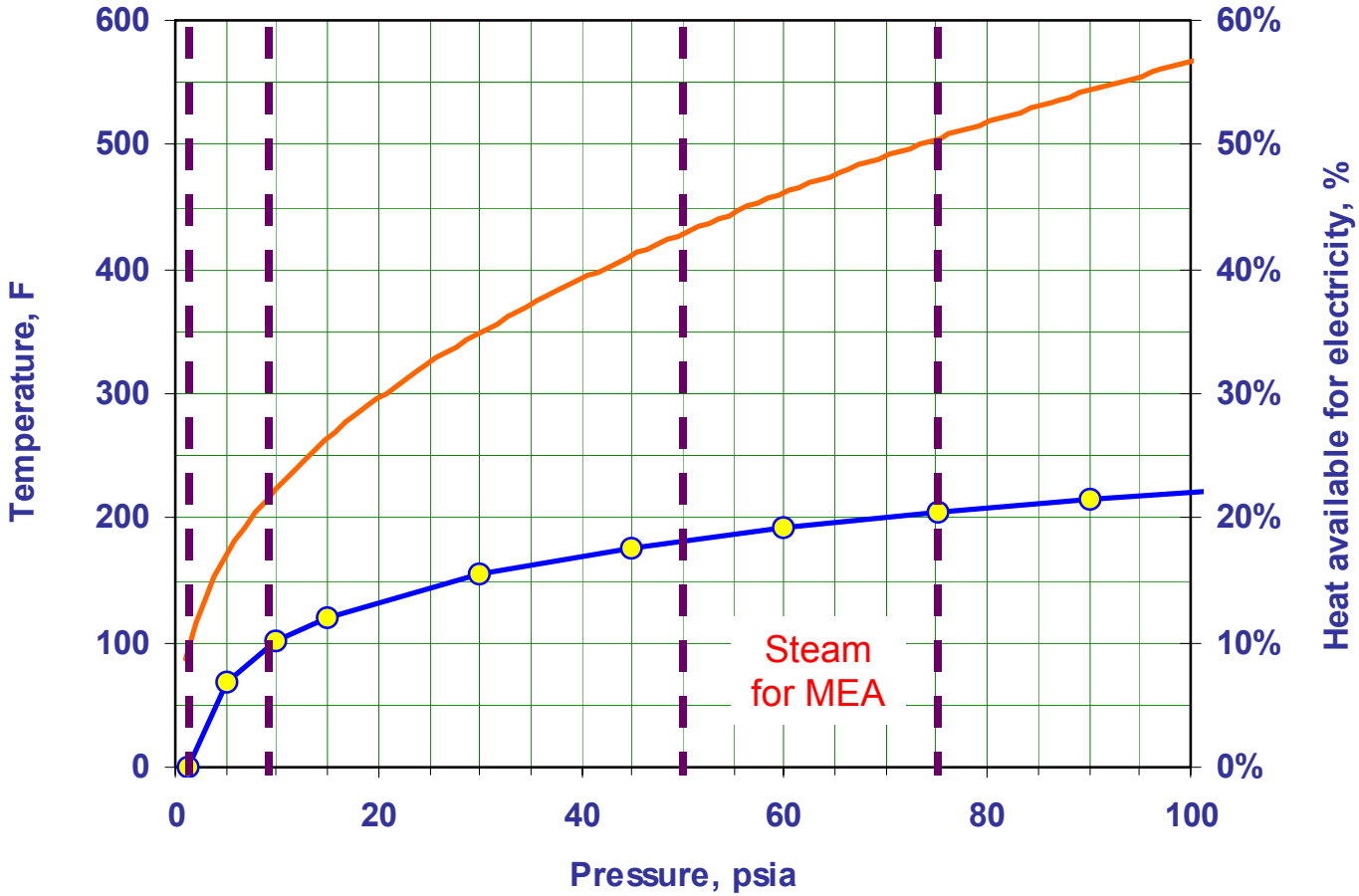

- *Lower steam pressure, low potential to produce electricity*

Proposed Integrated Vacuum Carbonate Process

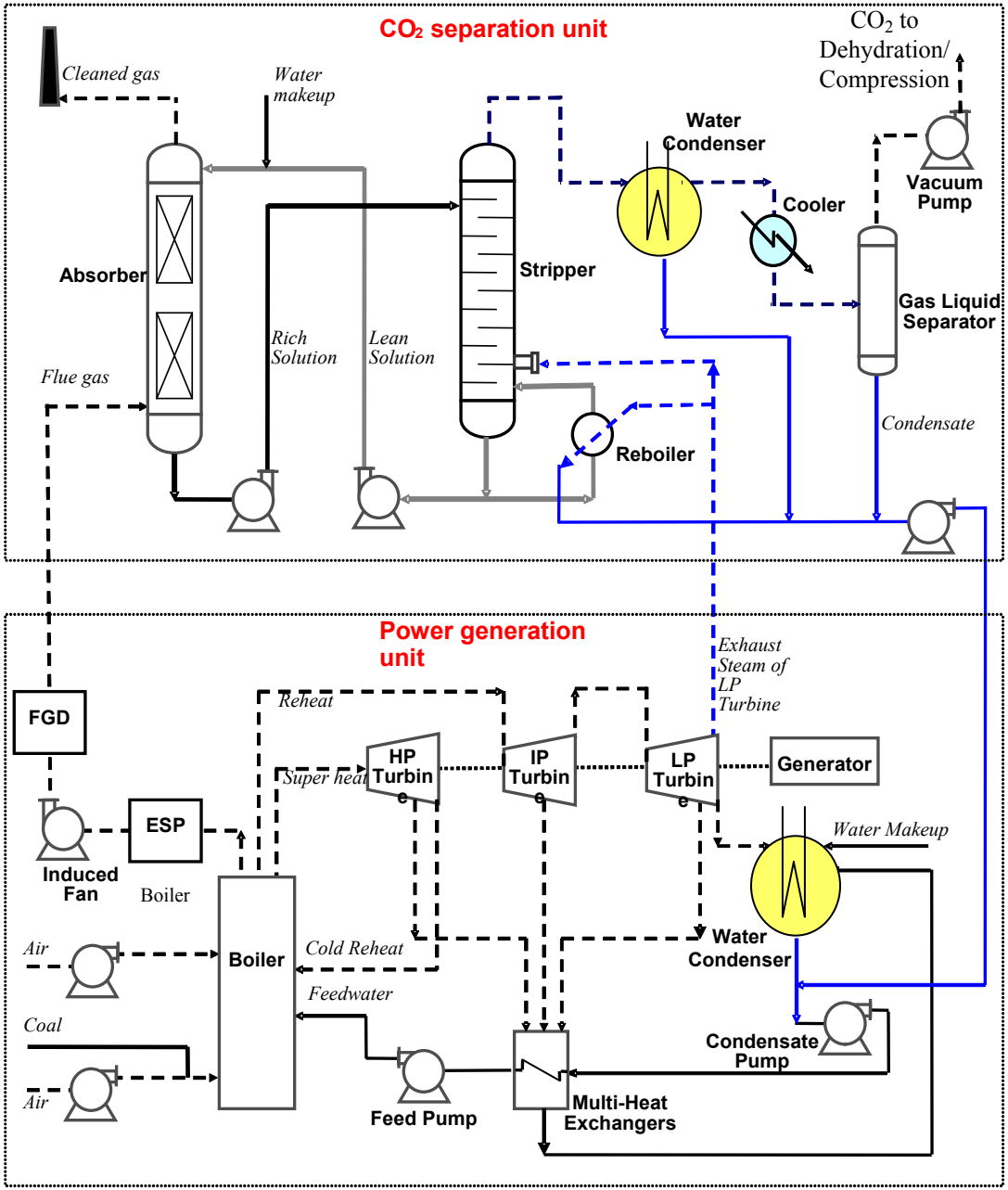

Process Simulation Using ChemCad

CO_2 capture

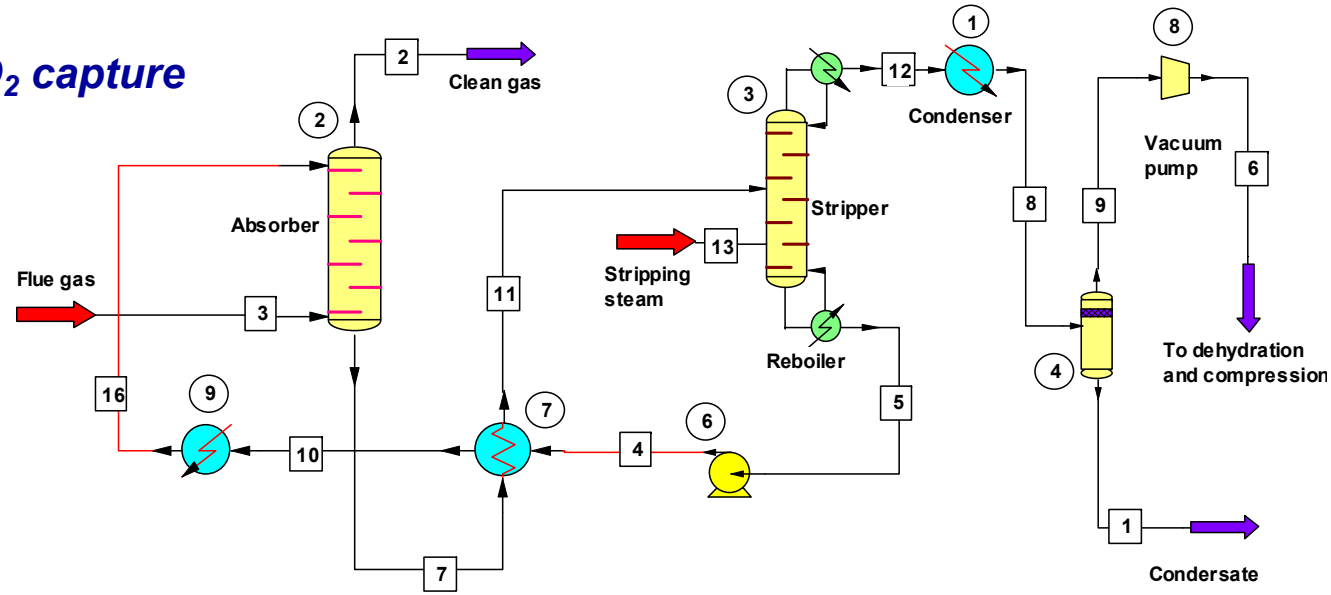

Steam cycle

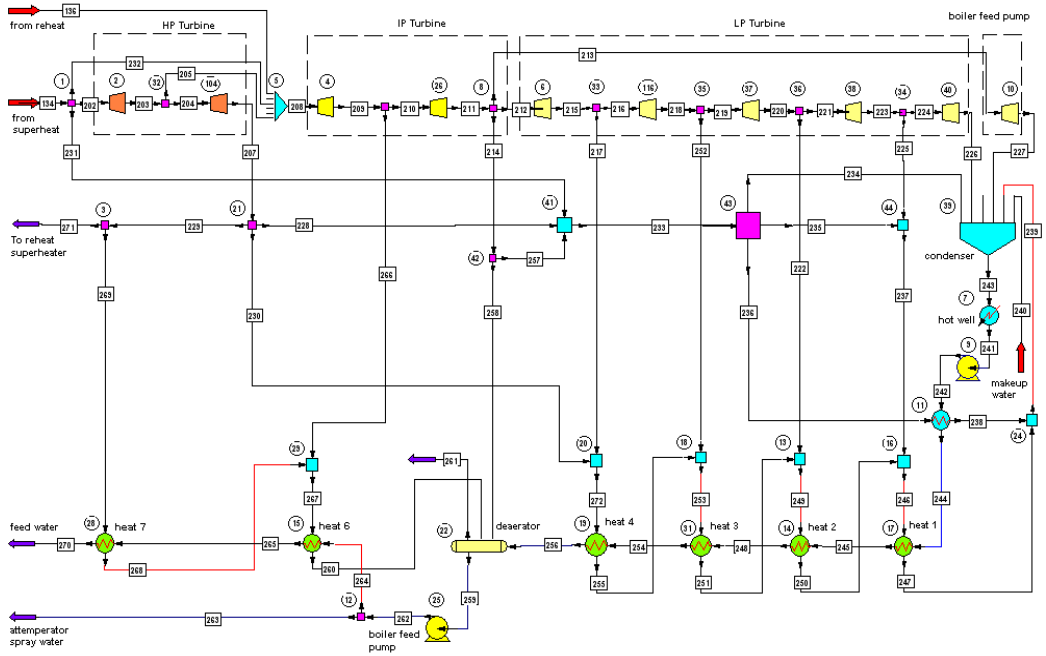

Process Conditions

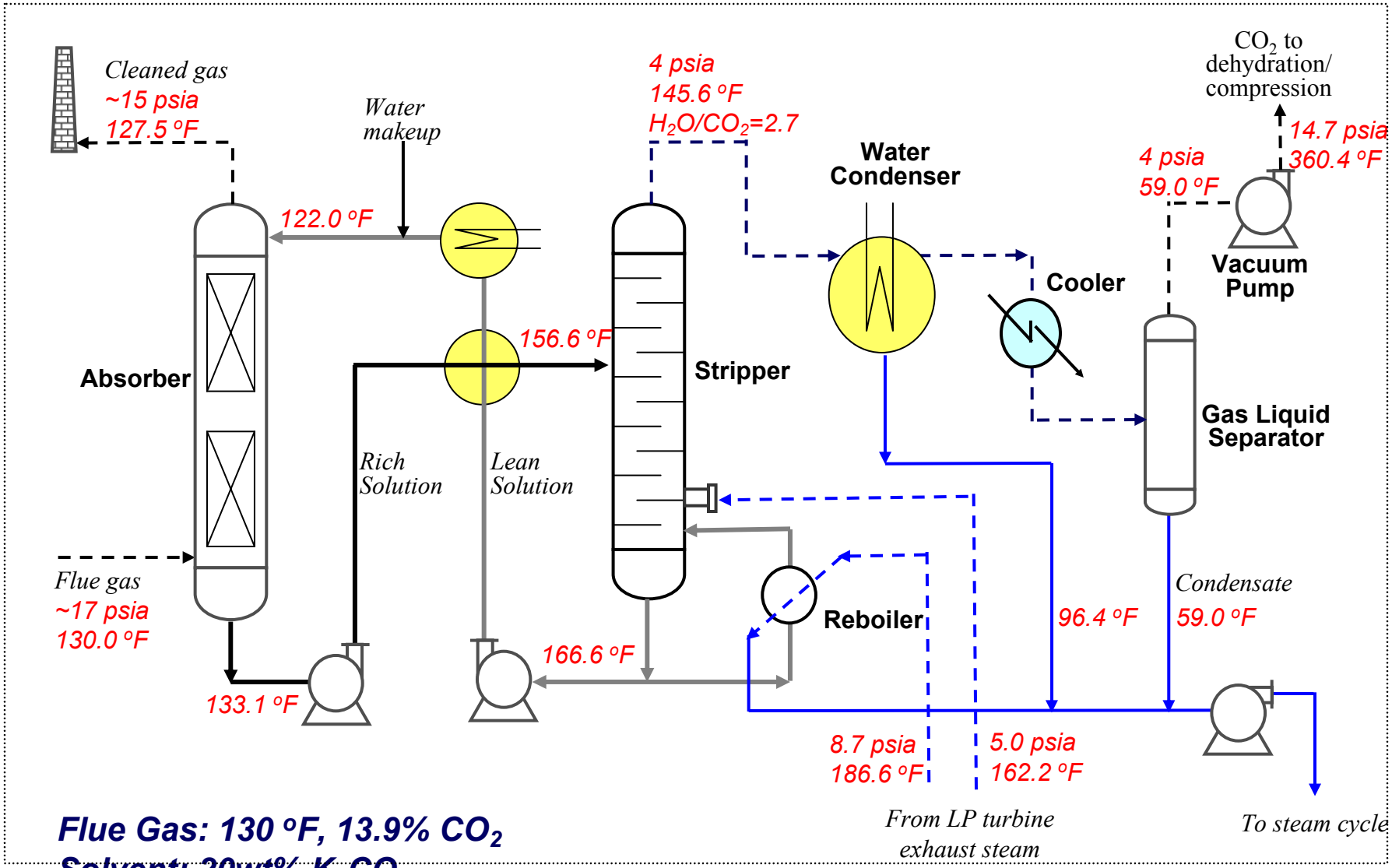

Flue Gas: 130 °F, 13.9% CO_2
Solvent: 20wt% K_2CO_3
Operating vacuum: 4 psia
CO_2 capture: 90%

Impact of Steam Extraction

Turbine generations in a 533 MW (gross) plant (MW)

	PC	PC+MEA	Vacuum
HP	150.6	150.6	150.6
IP	124.7	124.7	124.7
LP	**257.9**	**165.5**	**222.3**
Total	**533.2**	**440.9**	**497.6**
Electricity loss		**92.3**	**35.6**

Operating Pressure vs. Electricity Loss

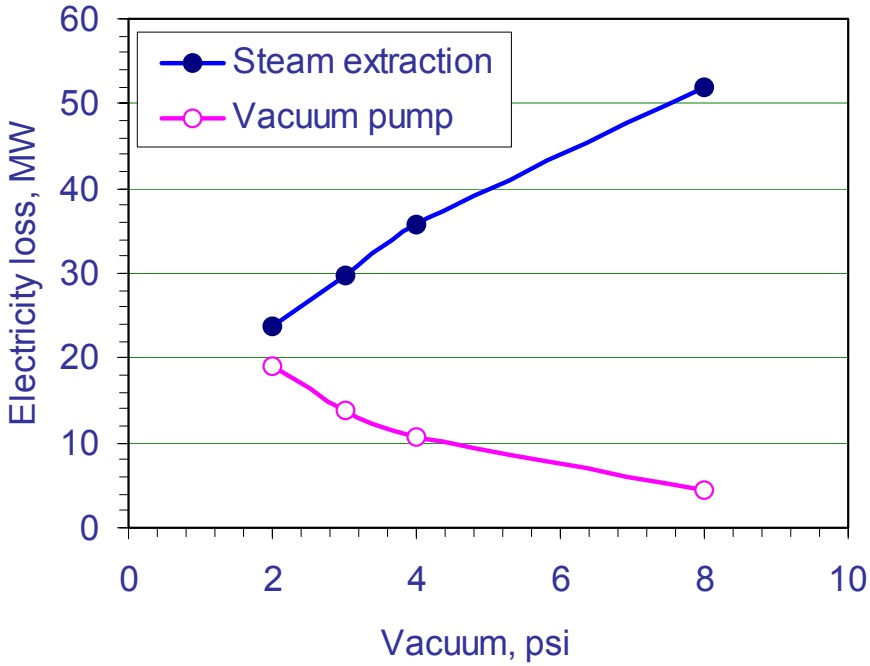

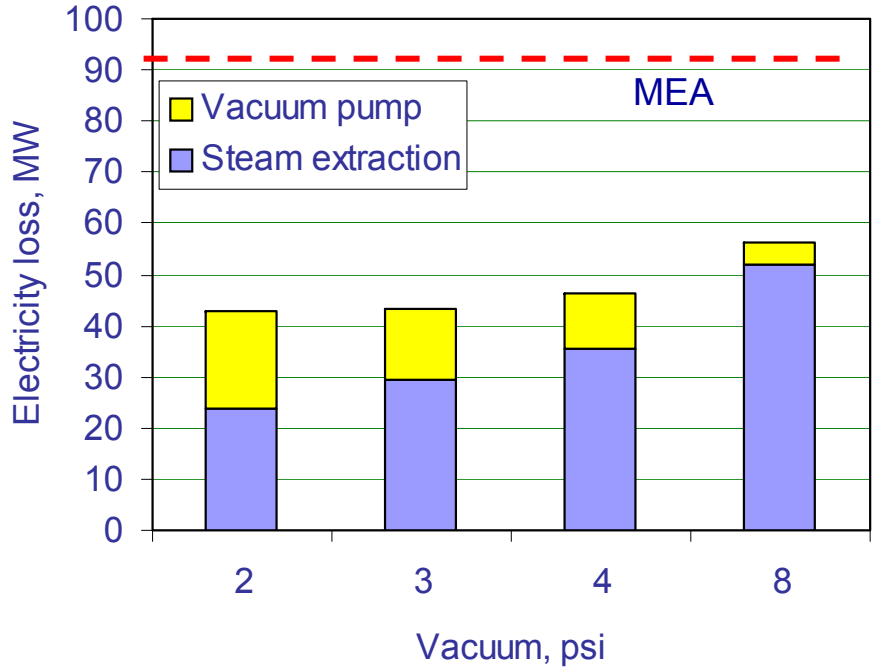

- *Electricity loss increases 30% with increasing operating pressure from 2-8 psia*
- *40-50% lower electricity loss compared to MEA process*

Energy Use Comparison

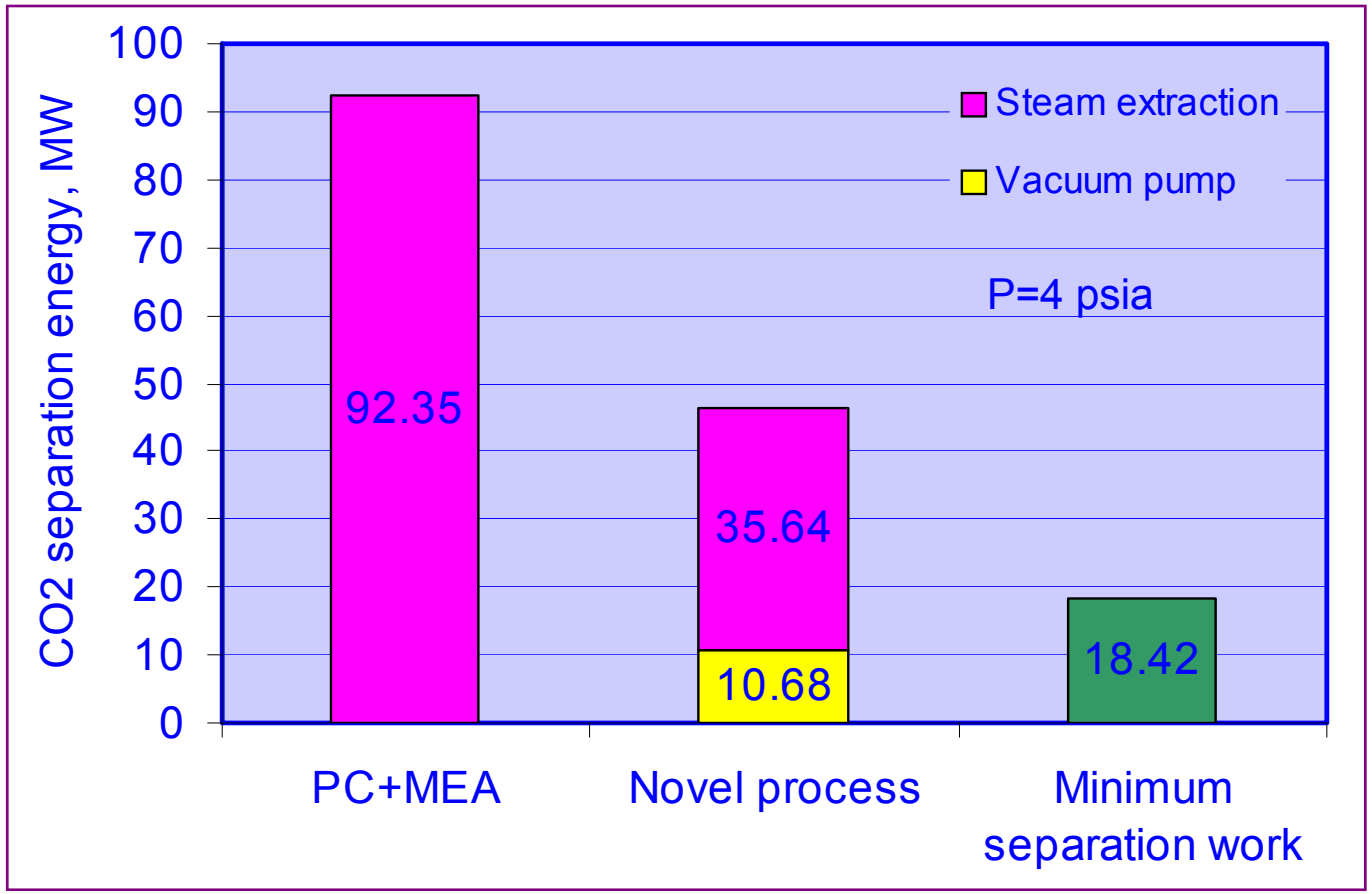

Breakdown Energy Use

	PC	PC+ Vacuum	PC+ MEA
Steam extraction loss, MW	0	35.64	92.35
CO_2 compression, MW	0	35.42	35.42
Vacuum pumps, MW	0	10.68	0
Aux. energy, MW	34.74	49.42	47.36
Subtotal, MW	34.74	131.16	175.13
Net output, MW	498.49	402.07	358.10

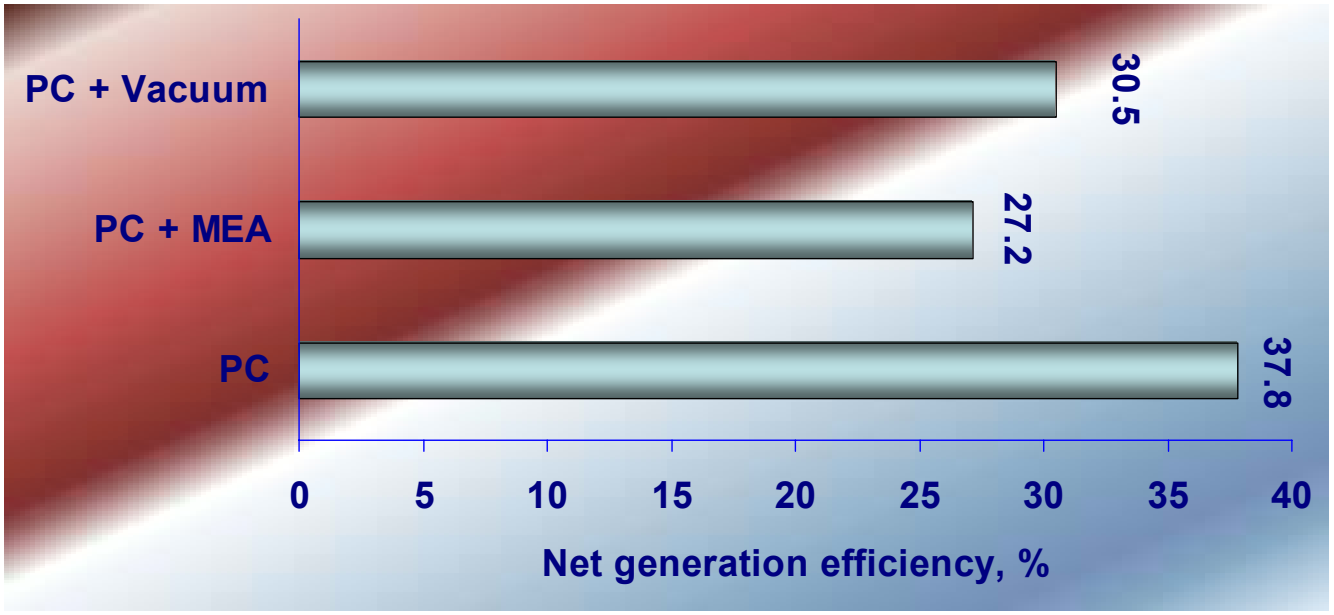

Economic Analysis

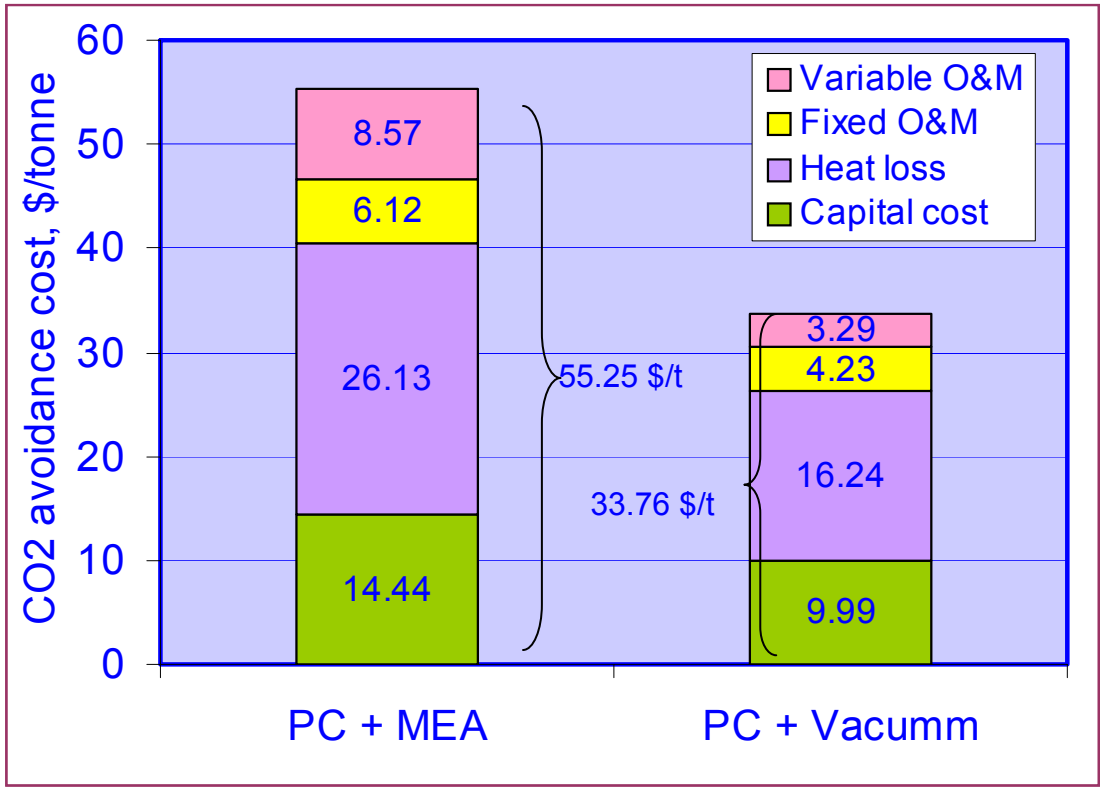

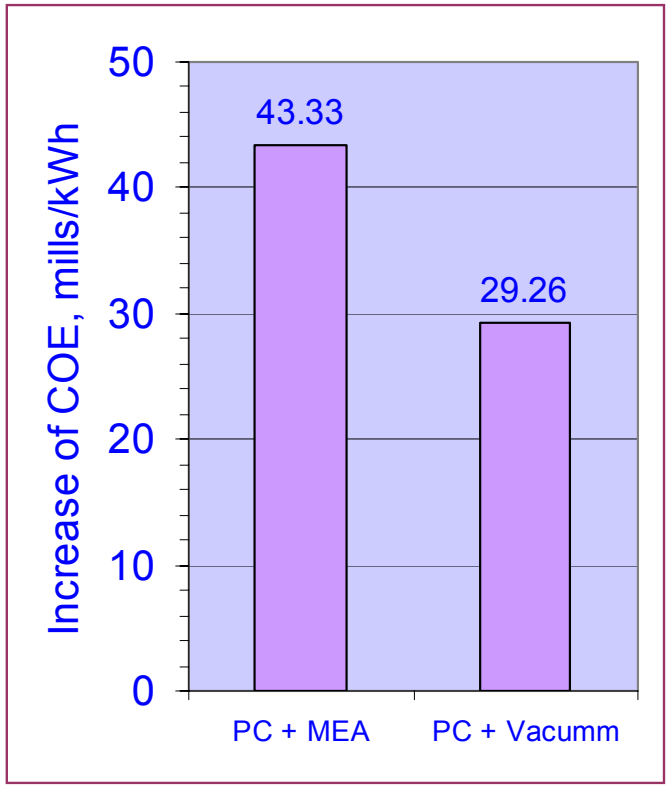

- *Energy consumption contributes to ~50% total CO_2 capture cost*
- *40% lower than the cost of MEA process*

Conclusions

- *Amine-based absorption processes will reduce electricity output by ~30%*
- *Proposed process uses low quality steam at a temperature of 100-180 F*
- *Key process parameters is the vacuum degree*
- *40-50% lower electricity loss compared to MEA process*
- *40% lowerCO_2 avoidance cost compared to MEA process*

Further Work

- *Development of promoters (or catalysts) to accelerate CO_2 absorption at a low temperature.*

- *Development of additives to reduce water vapor pressure of solvent*

- *Process optimization*

  trade-off between equipment size (stripper and vacuum pump) and operating pressure

Thanks for your attention !