Fifth Annual Conference on Carbon Capture & Sequestration

Steps Toward Deployment

Advanced Capture

Preliminary Assessment of Direct FuelCell® Systems for Combined Power Generation and Carbon Dioxide Separation

Hossein Ghezel-Ayagh, Robert Sanderson, and Dilip Patel
FuelCell Energy, Inc.
Danbury, CT

May 8-11, 2006 • Hilton Alexandria Mark Center • Alexandria, Virginia

FuelCell Energy

FuelCell Energy Profile

- Delivering commercial products now with advanced Direct FuelCell® technology
- Established strong commercial relationships with major distributors in the U.S., Canada, Germany, Japan and Korea
- #1 high temperature stationary fuel cell manufacturer and developer including carbonate and solid oxide applications
- A leading fuel cell technology developer for over 30 years – over $530 million invested
- Headquarters in Danbury, CT
  Manufacturing in Torrington, CT – 50 MW capacity
- Strong balance sheet with approximately $163 million at January 31, 2005

FuelCell Energy

FuelCell Energy Core Products – 250kW-10MW

DFC300MA

DFC1500

DFC3000

Product Characteristics

- High temperature, high efficiency, carbonate fuel cell power plants for base load commercial and industrial applications
- High value waste heat by-product for cogeneration
- Internally generated hydrogen from readily available fuels such as natural gas –*operating at customer sites today*
- Certifications for product safety, interconnection, performance and installation
- Meeting customer expectations

Multi-MW Grid Support

FuelCell Energy

Concept Background

FuelCell Energy

DFC-Based CO_2 Separation System

Objectives:

- **Cost-effective carbon dioxide separation systems utilizing Direct FuelCell technology**
- **Separation of at least 90% of carbon dioxide from the greenhouse gases (GHG) generated by coal fired power plants**
- **Less than 10% increase in the cost of energy services for long-term deployment**

FuelCell Energy

CO_2 Transfer Mechanism in Direct FuelCell (DFC)

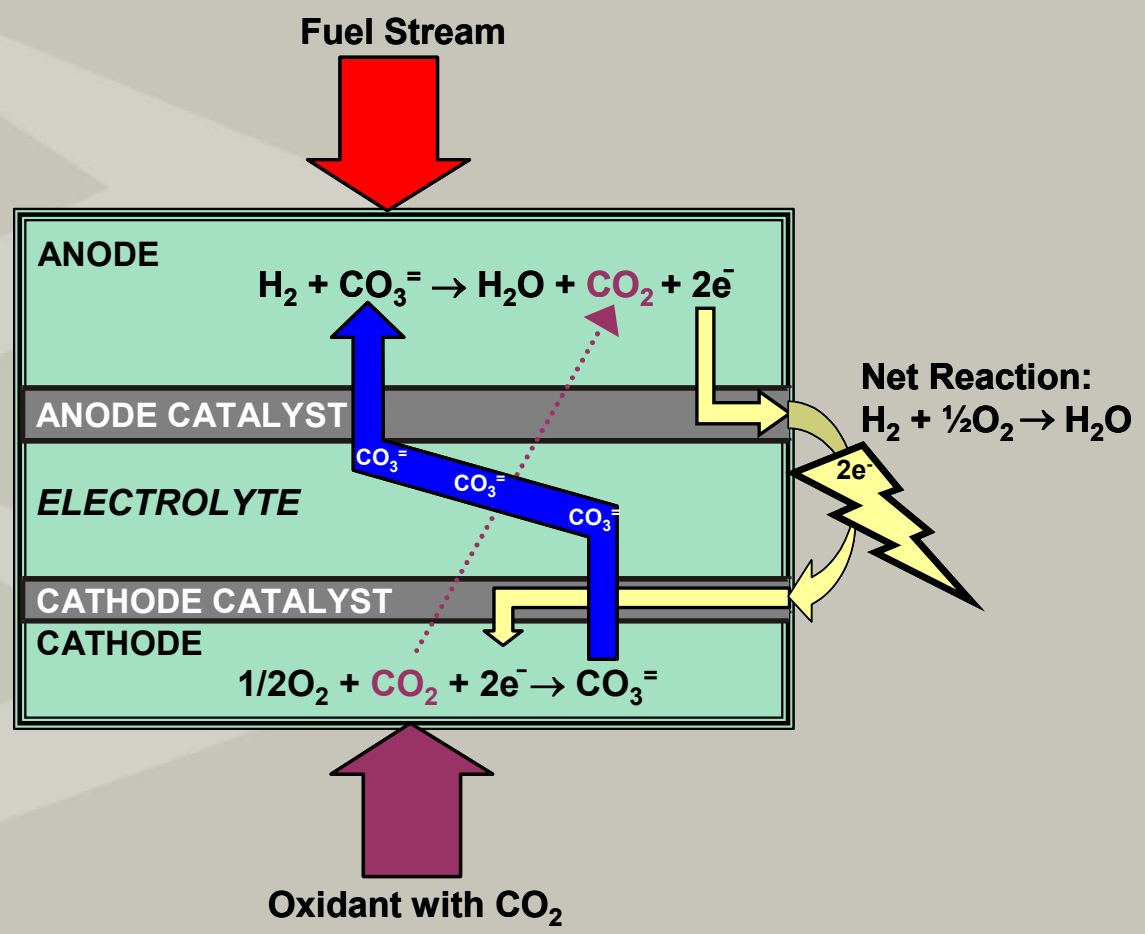

Carbon Dioxide is transferred from cathode to anode via carbonate ions.

FuelCell Energy

Single Cell Schematic

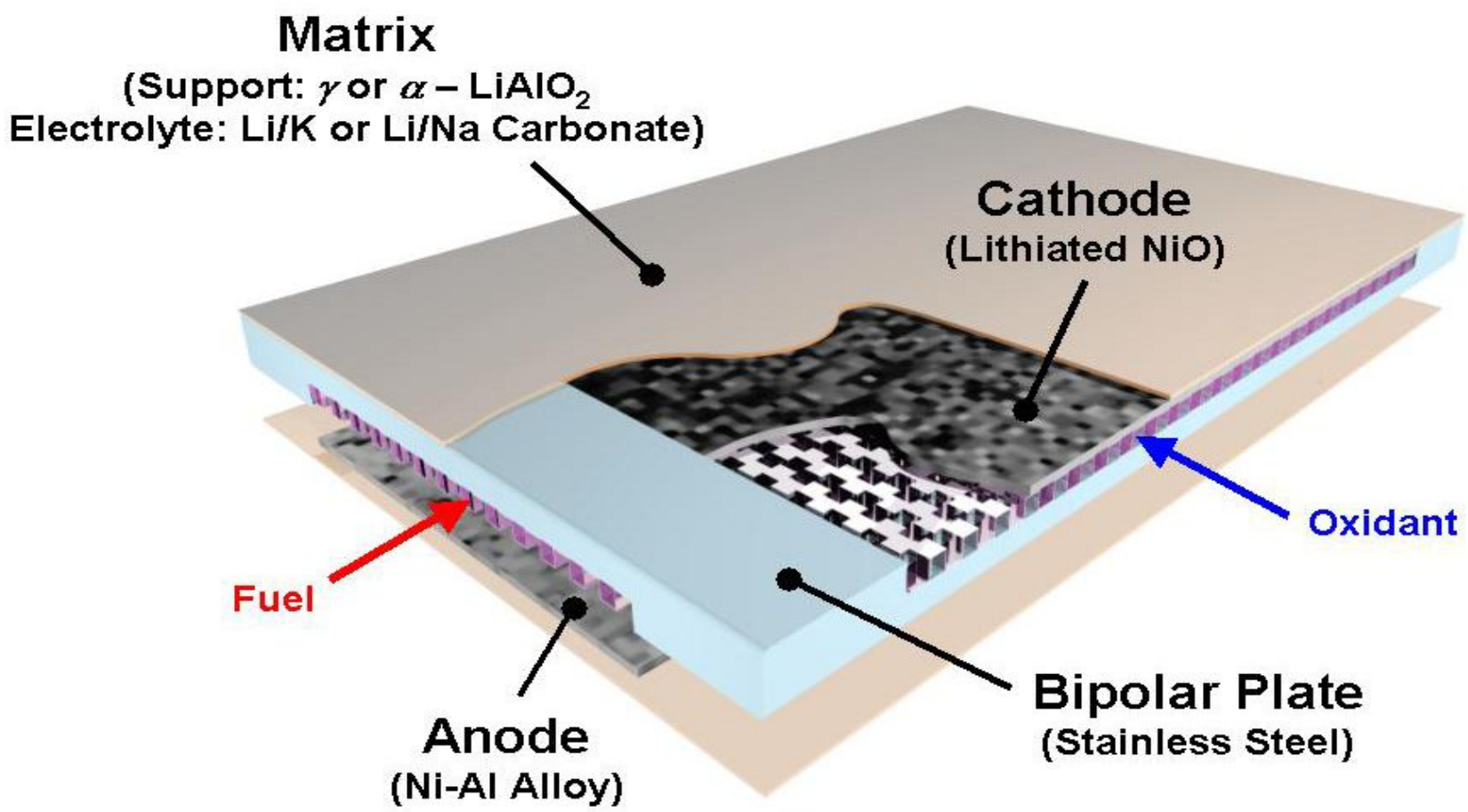

DFC-Based CO_2 Sequestration System Concept

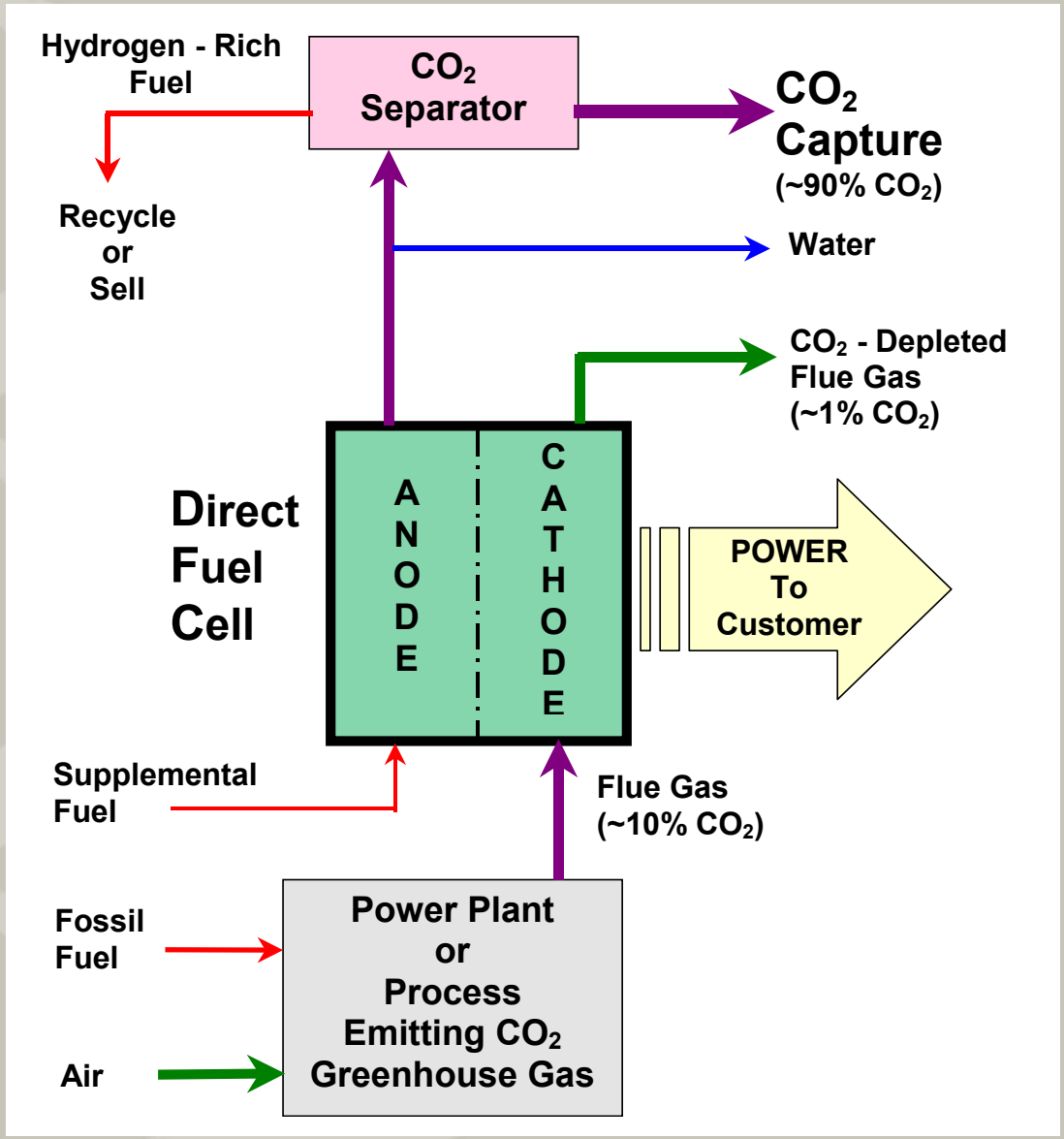

FuelCell Energy

FUEL CELL TESTING

FuelCell Energy

Fuel Cell Tests and Data Analysis

- Performed tests of lab-scale fuel cell
  - Utilized to support system design task
- Conducted tests with simulated GHG compositions as fuel cell cathode gas
  - Characterize fuel cell performance
- Optimized fuel cell performance for CO_2 transfer to anode
- Performed data analysis
  - Utilized to improve the computer model by revising the fuel cell performance characteristics

FuelCell Energy

Lab-scale Fuel Cell Test Facilities

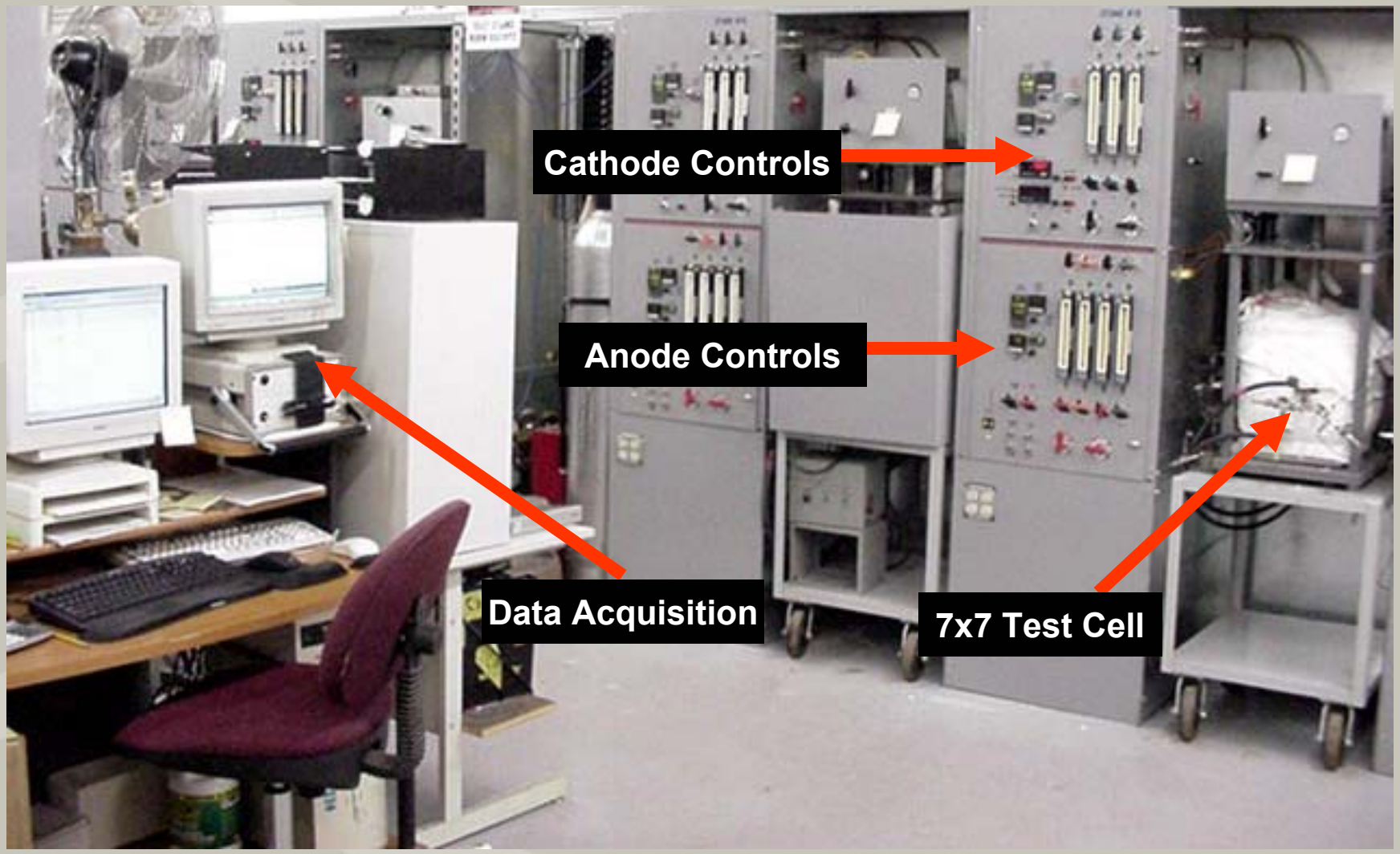

FuelCell Energy

Fuel Cell Test Results
PC Boiler Case

Fuel Cell Performance on Simulated PC Boiler Exhaust Gas

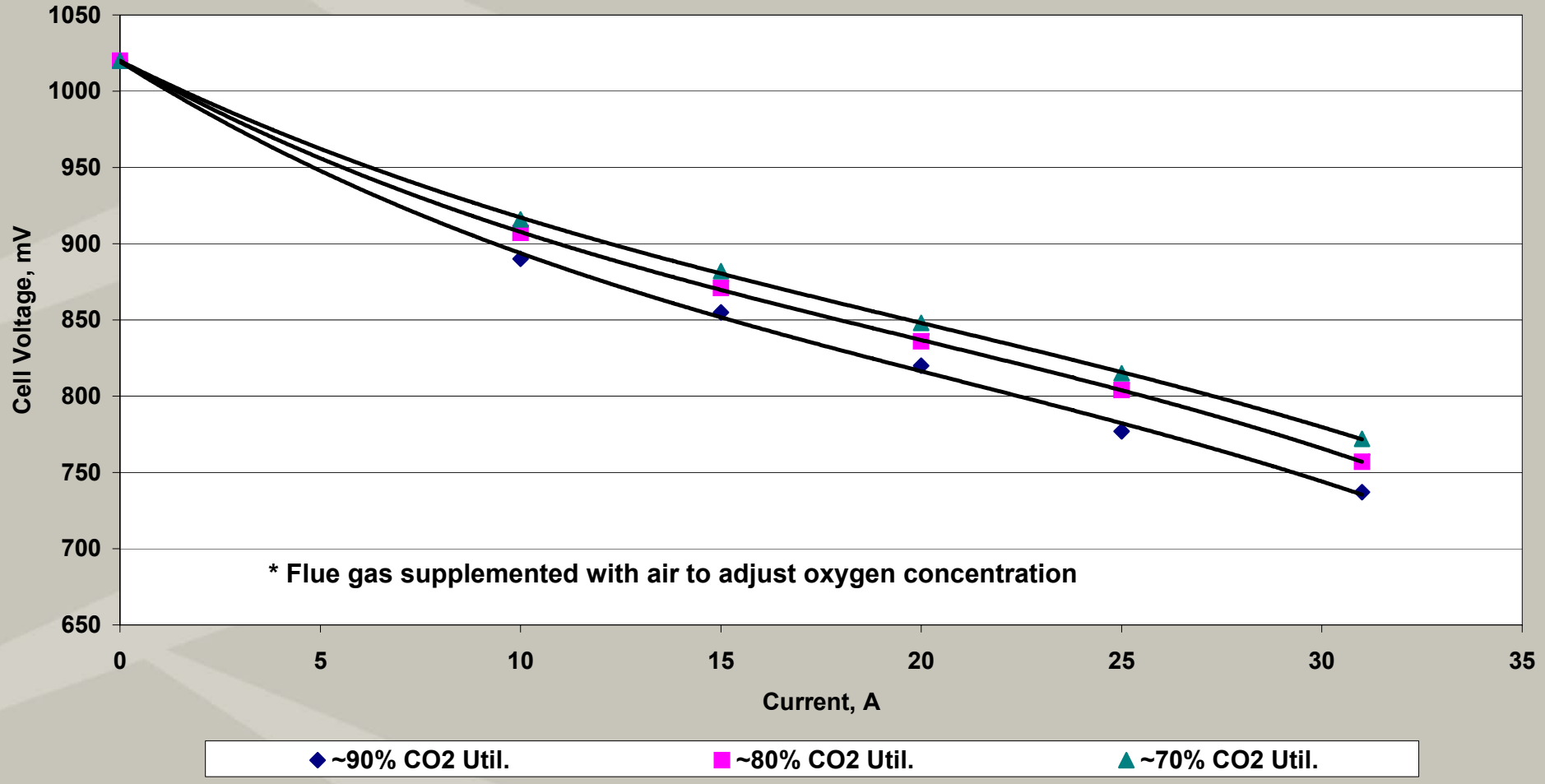

FuelCell Energy

Fuel Cell Test Results
IGCC Case

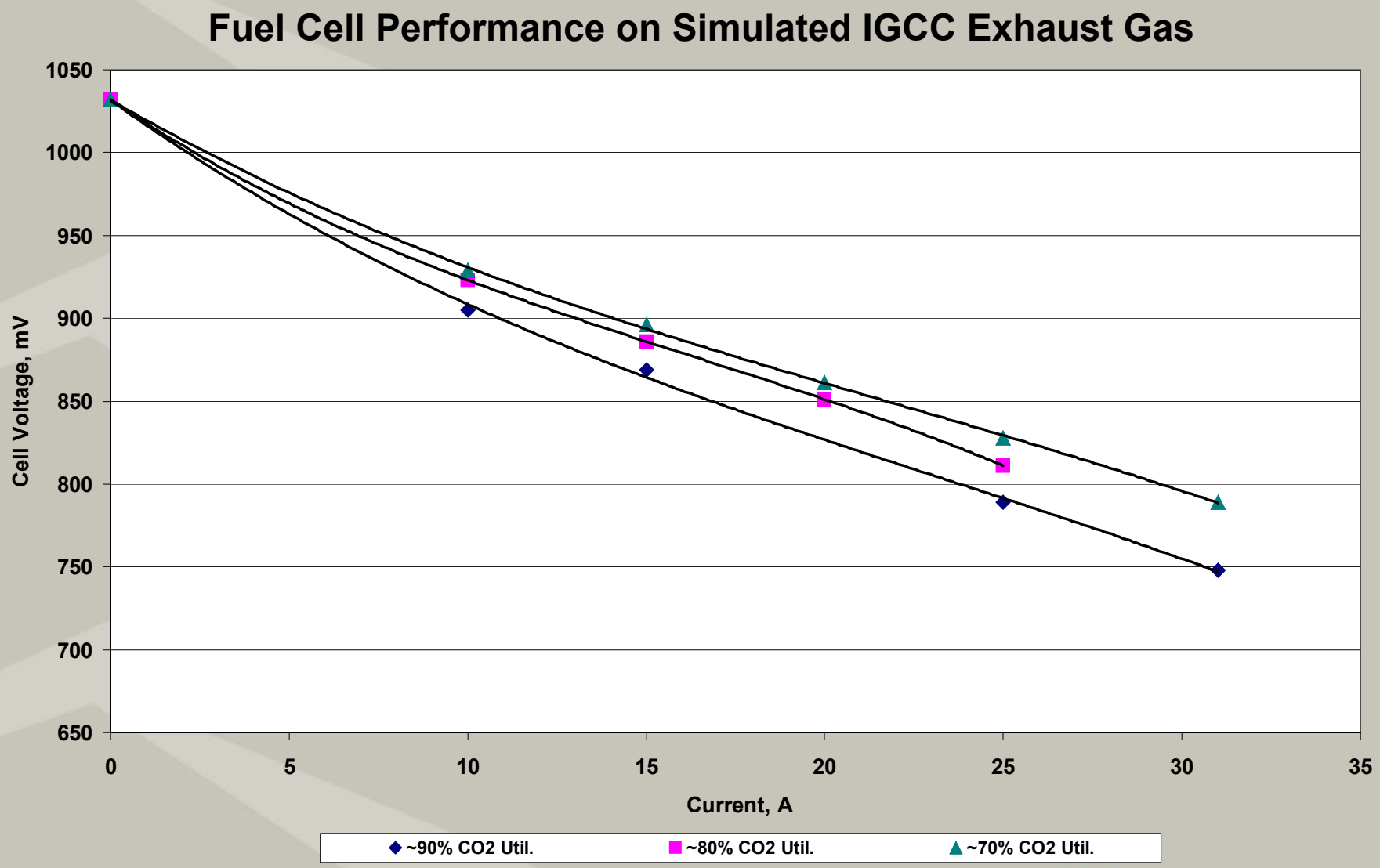

FuelCell Energy

SYSTEM DESIGN

FuelCell Energy

Plant Design Basis

Application	**GHG removal from 200MW coal fueled power plant**
Effectiveness	**>90% of CO_2 removed**
Power Output Characteristics	**Output Voltage: 13.8 kV (IEEE Standard 519)** **Power Factor Range: 0.90 Lag to 0.90 Lead at rated output** **Power Output Phase: 3 Phase, Wye, 4 Wire** **Frequency: 60 Hz ± 5%**
Power Plant Life	**25 Years**
Availability	**92%**

FuelCell Energy

Coal Fueled Power Plant Exhaust Streams (From Database Compiled)

	Pulverized Coal Boiler Steam Cycle Plant [1]	Atmospheric Circulating Fluidized Bed Boiler Steam Cycle Plant [2]	Integrated (coal) Gasification Combined Cycle Power Plant [2]	
			Existing Plant	Commercially Offered Future Plant
Gas Composition (mole %)				
CO_2	12.06	14.40	7.49	7.85
O_2	4.47	3.32	11.95	11.76
N_2 + Ar	70.32	74.81	65.73	72.55
H_2O	13.13	7.45	14.84	7.83
Temperature (deg F)	129	291	280	280
Pressure (psia)	14.7	14.7	14.7	14.7
Flow Rate (lbmole/h)*	69,269	63,032	100,563	115,573

* Scaled to 200 MW net plant size

[1] E. Parsons (NETL) and W. Shelton (EG&G), "Advanced Fossil Power Systems Comparison Study," Final Report, Dec 2002, Prepared for: National Energy Technology Laboratory (NETL)

[2] "Greenhouse Gas Emissions Control by Oxygen Firing in Circulating Fluidized Bed Boilers: Phase I – A Preliminary Systems Evaluation," Final Report (Volume I), May 2003, Prepared for: National Energy Technology Laboratory, By: Alstom Power, Inc., Windsor, CT

FuelCell Energy

System Design and Analysis

- **Study integrated design options**
  - Block Flow Diagrams
- **Prepare process flow sheets**
  - System configurations
- **Conduct mass and energy balances**
  - Develop integrated system models using ChemCad (Chemstations inc) simulation software
  - Estimate fuel cell and overall plant performance
- **Perform sizing of key plant equipment**
- **Perform conceptual cost analysis**
  - Historical cost data base
  - Vendor quotes

FuelCell Energy

DFC System Process Flow Sheet (Baseline Configuration)

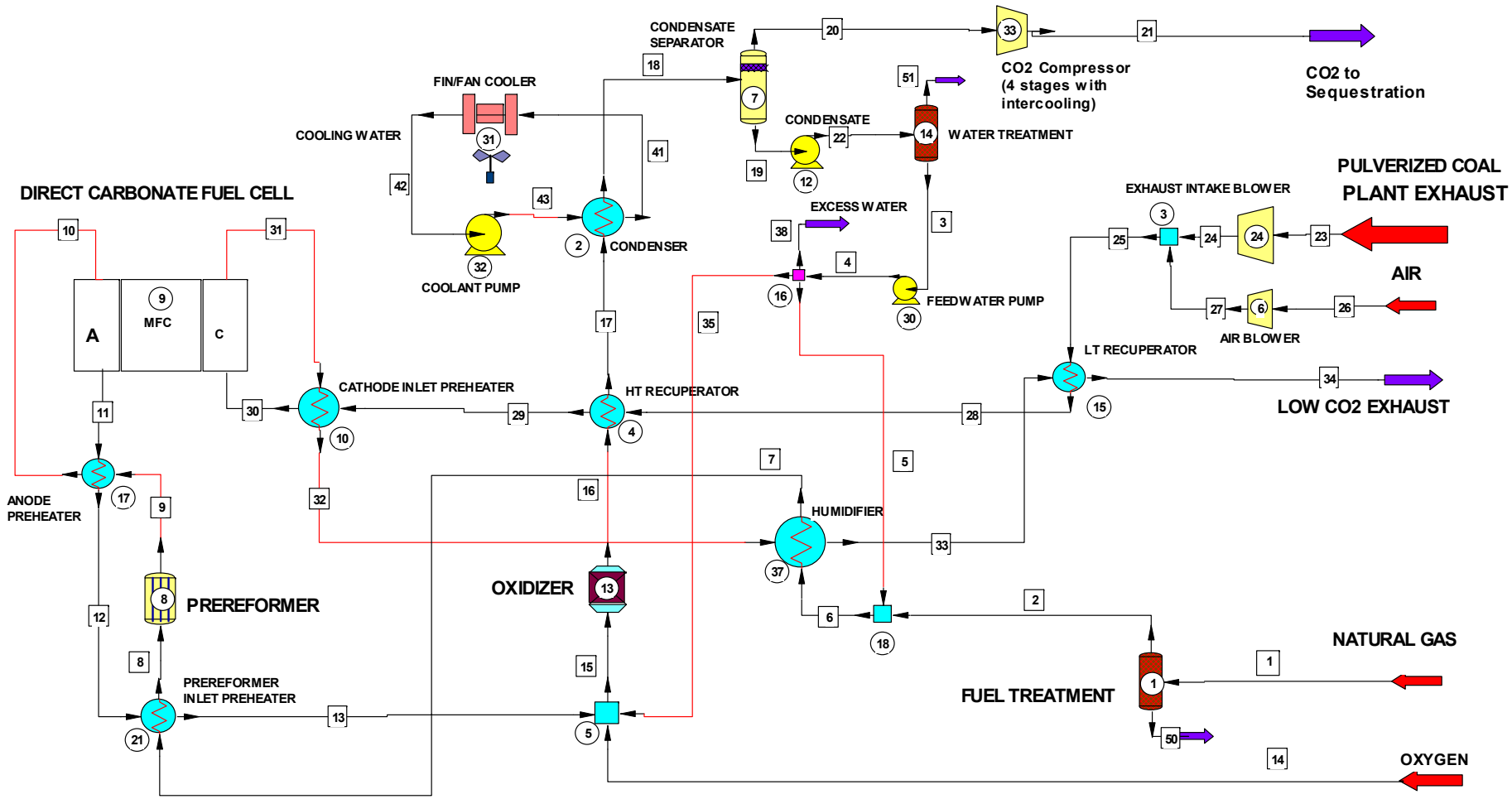

FuelCell Energy

DFC System Performance Summary

DFC system has shown excellent performance in separation of carbon dioxide, in the study of various types of coal fueled power plants

PLANT TYPE	Net Power MW		CO2 to Environment lbs/MWhr	
	w/o DFC	with DFC	w/o DFC	with DFC
Pulverized Coal (PC) Steam Plant	200	341	1838	108
ACFB Steam Plant	200	353	1997	113
IGCC Plant	200	327	1657	101

DFC provides additional power

> 90% CO_2 separation from the greenhouse gas (per unit energy produced)

*** Preliminary results prior to input from fuel cell test results**

FuelCell Energy

Effect of CO_2 Capture Technologies on Power Production

Percent Increment in Net Power Resulting from CO_2 Capture

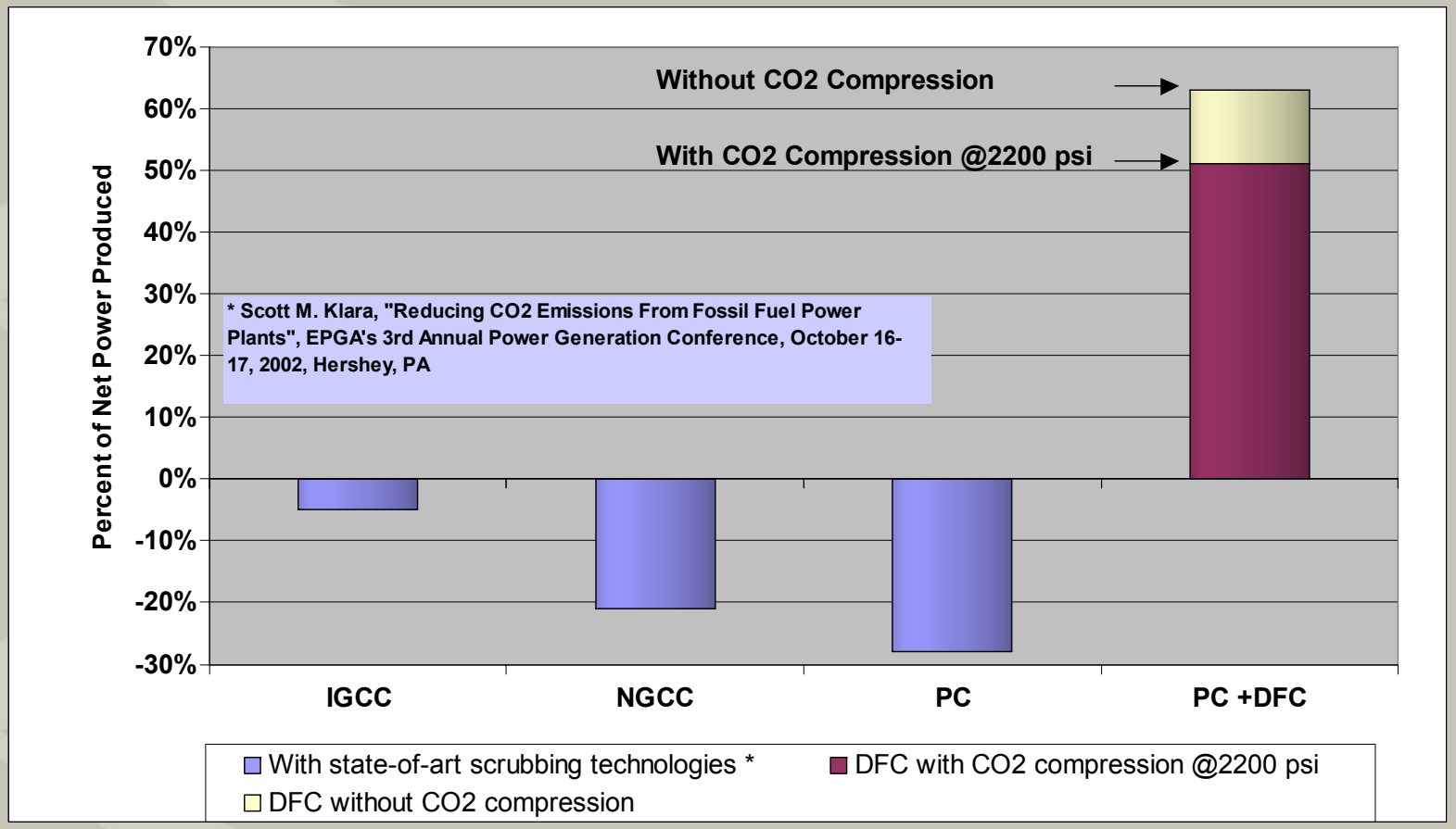

DFC Based System Compared to State-of-the-Art Scrubbing Technologies

FuelCell Energy

Economic Analysis

FuelCell Energy

Effect of CO_2 Capture Technologies on Capital Cost

Percent Increment in Capital Cost Resulting from CO_2 Capture

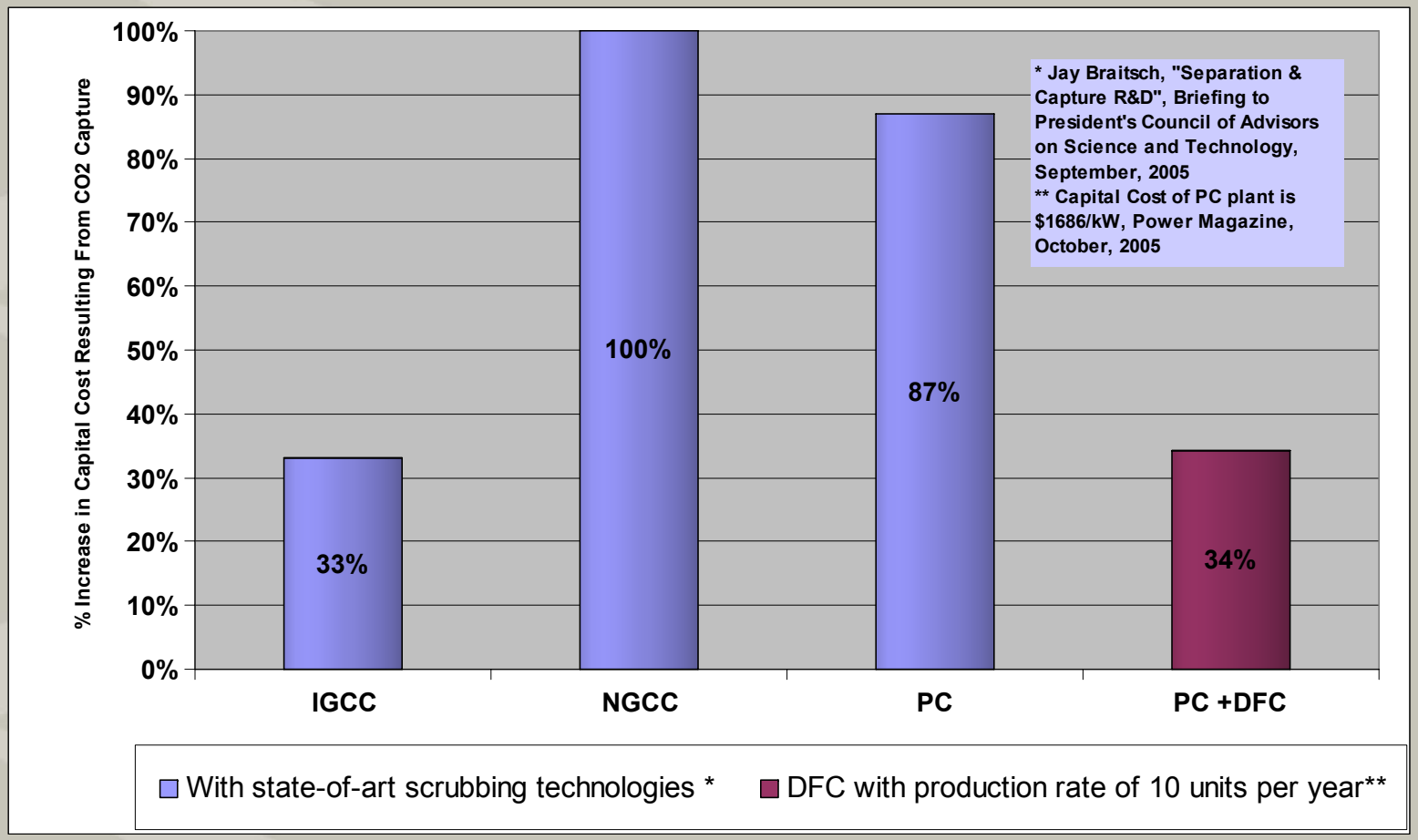

DFC Based System Compared to State-of-the-Art Scrubbing Technologies

FuelCell Energy

Effect of CO_2 Capture Technologies on Cost-of-Electricity

Percent Increment in Cost-of-Electricity Resulting from CO_2 Capture

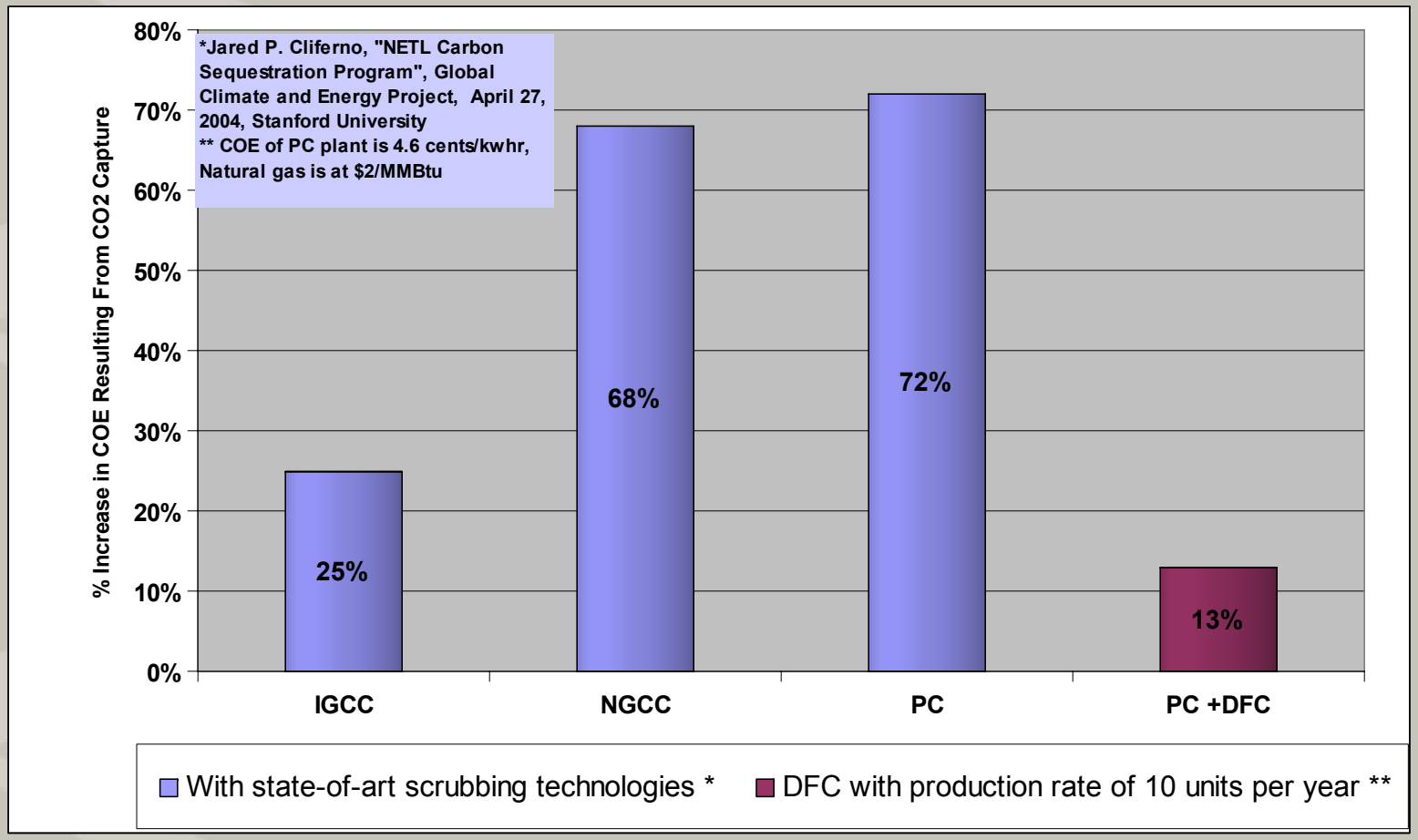

DFC Based System Compared to State-of-the-Art Scrubbing Technologies

FuelCell Energy

Percent Increment in Cost of Electricity (Reference COE = 7.62 ¢/kWhr)

- **Percent increase in cost of electricity for a PC plant producing power at 7.62 ¢/kWhr.**

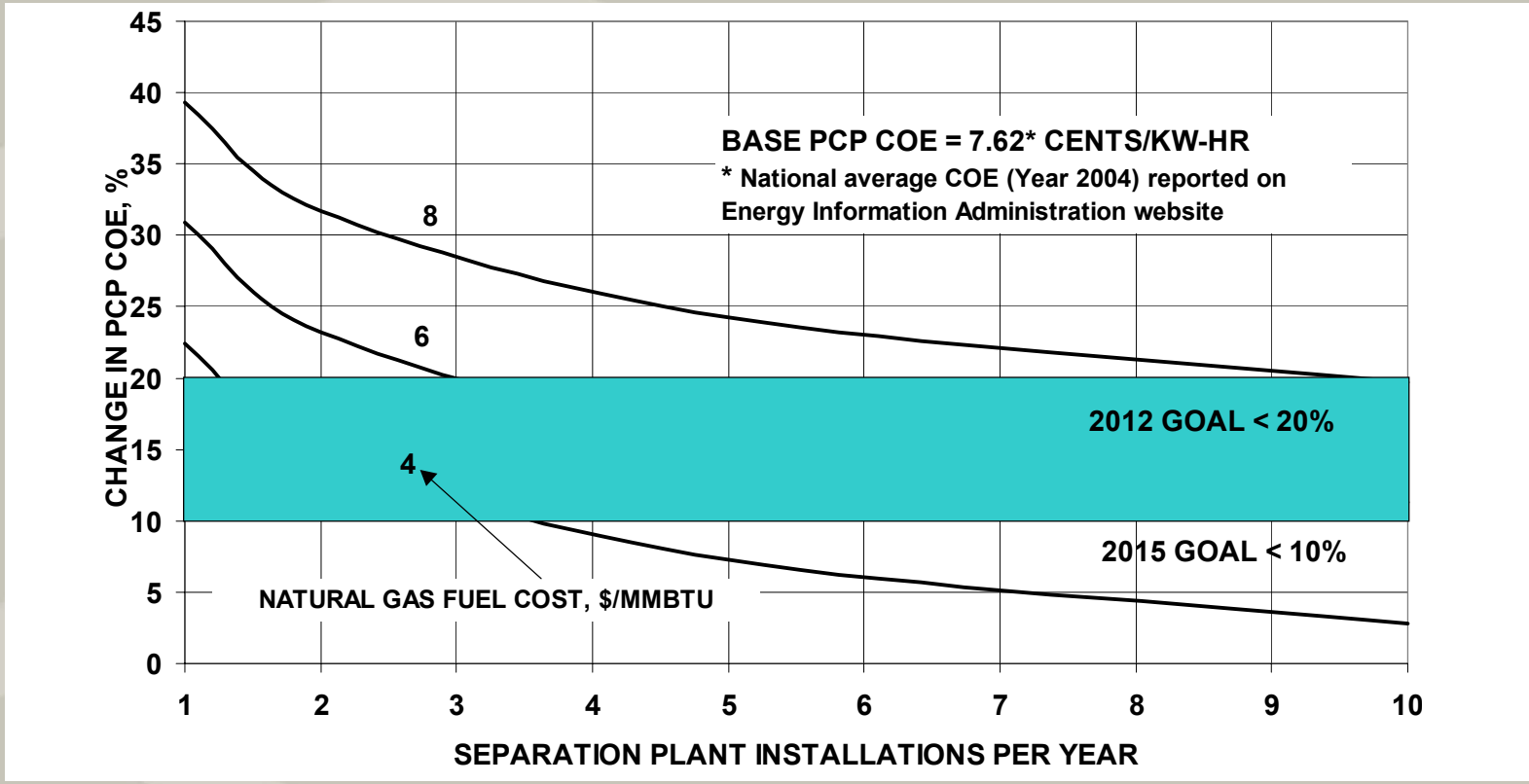

Cost targets can be met with prevailing natural gas prices

FuelCell Energy

Percent Increment in Cost of Electricity (Reference COE = 10 ¢/kWhr)

- **Percent increase in cost of electricity for a PC plant producing power at 10 ¢/kWhr.**

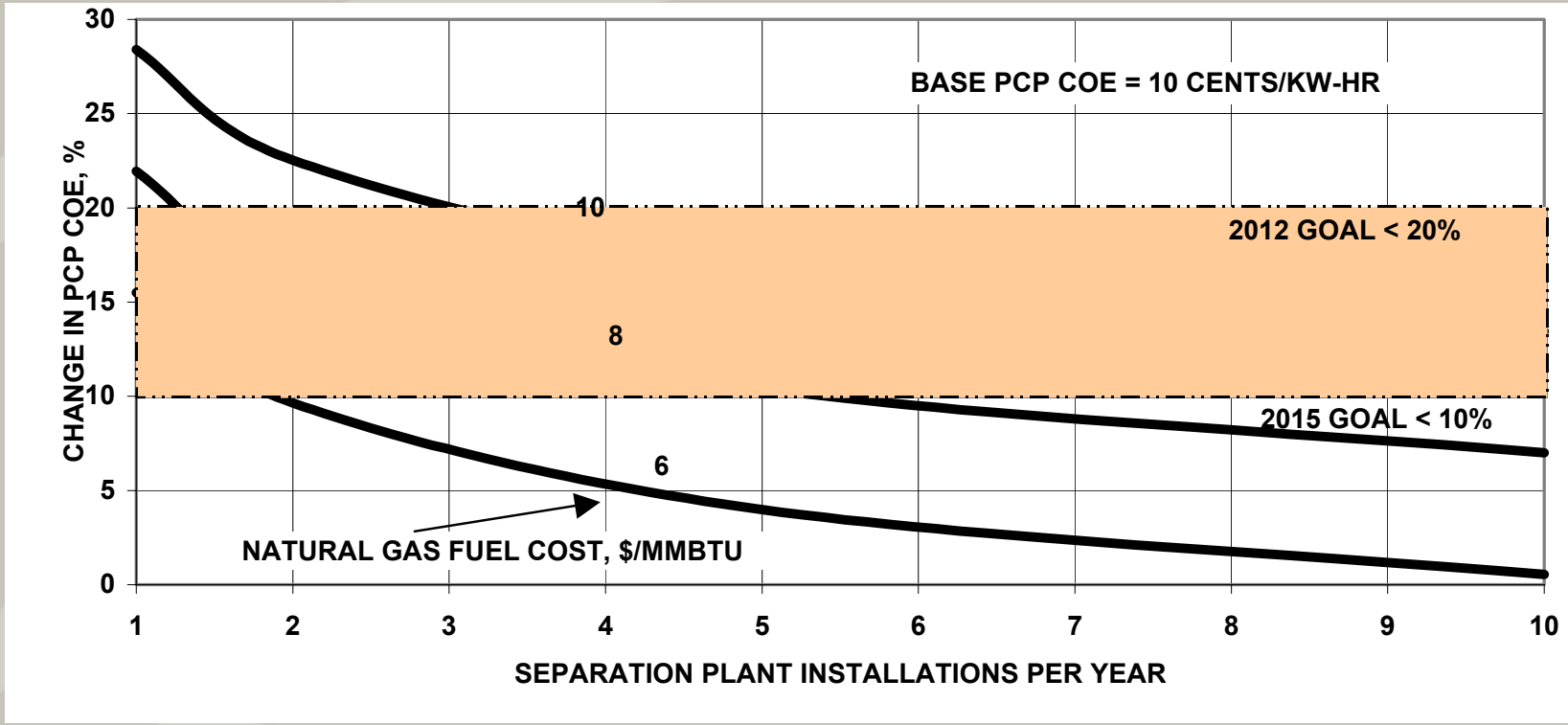

Cost targets are achievable.

FuelCell Energy

ALTERNATIVE SYSTEM DESIGNS

FuelCell Energy

Anode Exhaust Post-Treatment Options

- **Utilization of hydrogen at the site:**
  - Recycle as power plant fuel
  - Oxidation for heat recovery
- **Recovery of hydrogen as byproduct:**
  - Pressure swing adsorption (PSA, conventional technology)
  - Electrochemical separations (hydrogen pump, advanced technology)

Anode Exhaust Post-Processing Approach: PSA Option

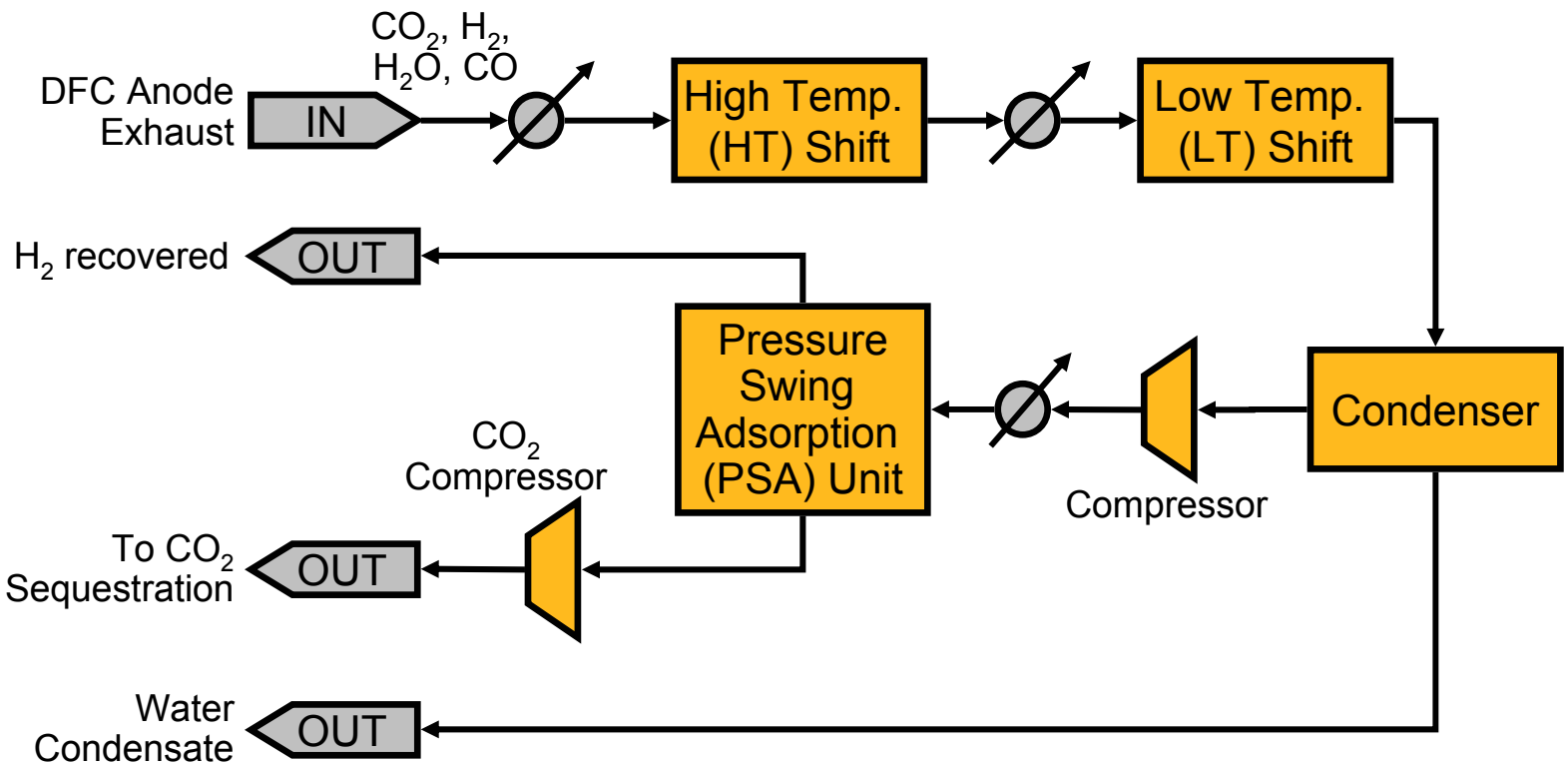

FuelCell Energy

Summary

- The Direct FuelCell technology offers a unique and attractive alternative for CO_2 sequestration.
- Results of the fuel cell tests with simulated PC plant flue gas have verified the potential of Direct FuelCell technology for >90% carbon dioxide separation.
- Conceptual designs of DFC based systems, focusing on GHG mitigation from coal fired plants, were developed.
- Economic analysis has indicated that DFC based sequestration systems may offer cost-effective solutions for combined power generation and CO_2 sequestration.
- Incremental cost of energy is anticipated to be as low as 10% of the cost-of-electricity in 2015 due to the on-going commercialization of the technology and high volume manufacturing.
- Alternative designs were identified which produce hydrogen as by-product and may result in further cost reduction.

FuelCell Energy

Acknowledgement

- This research and development program is performed as a FCE cost-shared project supported by the US Department of Energy through the National Energy Technology Laboratory (NETL) under the Award No. DE-FC26-04NT42206.
- The DOE Contracting Officer's Representative is Mr. David A. Lang of NETL.

FuelCell Energy

FuelCell Energy