Fifth Annual Conference on Carbon Capture & Sequestration

Steps Toward Deployment

Oxy-Combustion

Fuel-Fired Zero Emissions Power Plant Cycles with Oxygen Ion Transport Membranes (History and State-of-the-Art)

Kirsten Foy and Evgeni Yantovski

May 8-11, 2006 • Hilton Alexandria Mark Center • Alexandria, Virginia

Oxycombustion

- Zero emissions = oxycombustion

- Burn hydrocarbon fuel in oxygen
  - Only products are CO_2 and H_2O
  - Condense out water
  - Capture carbon dioxide for sequestration
  - Extra CO_2 or H_2O to reduce temperature

Oxygen Ion Transport Membranes (OTMs)

- Solid membranes made of special ceramics
- Ceramic lattice contains oxygen ion vacancies
- Above ~ 700°C oxygen ions can travel through
  - Acts like a sieve for oxygen

This presentation

- History of oxycombustion
- State of the art of oxycombustion
- Focuses particularly on cycles using OTMs

- Note all figures given in this presentation are taken from the papers referenced and are subject to the varied assumptions and in some cases mistakes in those papers. This presentation is only a history, not a comparative evaluation.

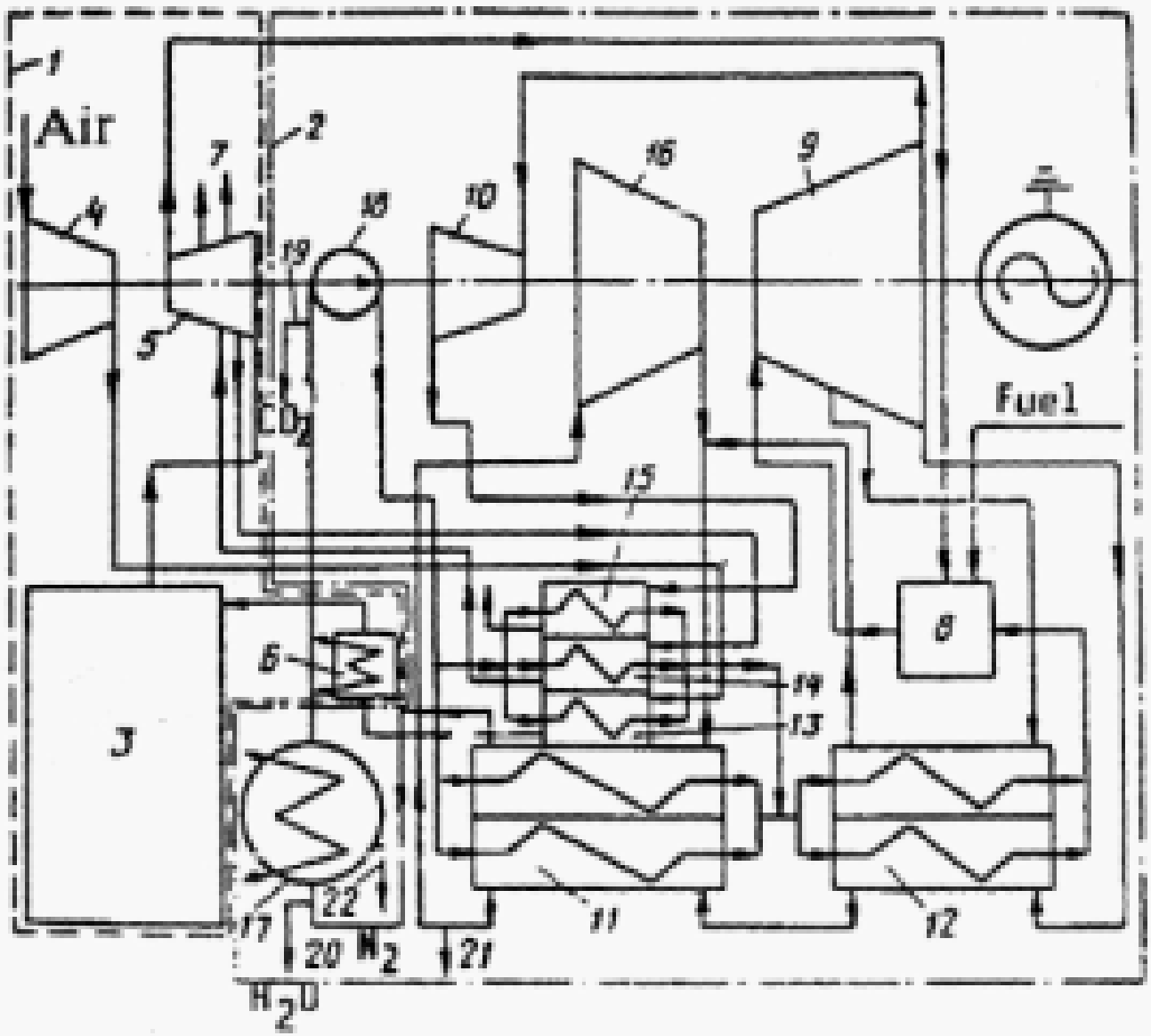

Figure 6.16 Outline of carbon dioxide zero-emissions power plant by V.L. Degtiarev and V.P. Gribivsky of July 28, 1967 [8] 1-Oxygen plant (ASU); 2-

Early oxycombustion concepts

- 1981 – Steinberg
  - Combined oxycombustion with enhanced oil recovery

- First coal fired oxycombustion ideas:
  - Wolsky (1985) and Berry and Wolsky (1986)
  - Nakayama (1992)

CO_2 recirculation – early papers

- Pechtl (1991)
  - Zero emissions plant 36% efficient
  - Ordinary power plant 39% efficient

- Bolland and Saether (1992)
  - First combined oxycombustion plant
  - Expansion in Gas turbine
  - Bottoming Rankine cycle
  - Efficiency 41% (non-oxycombustion 56%)

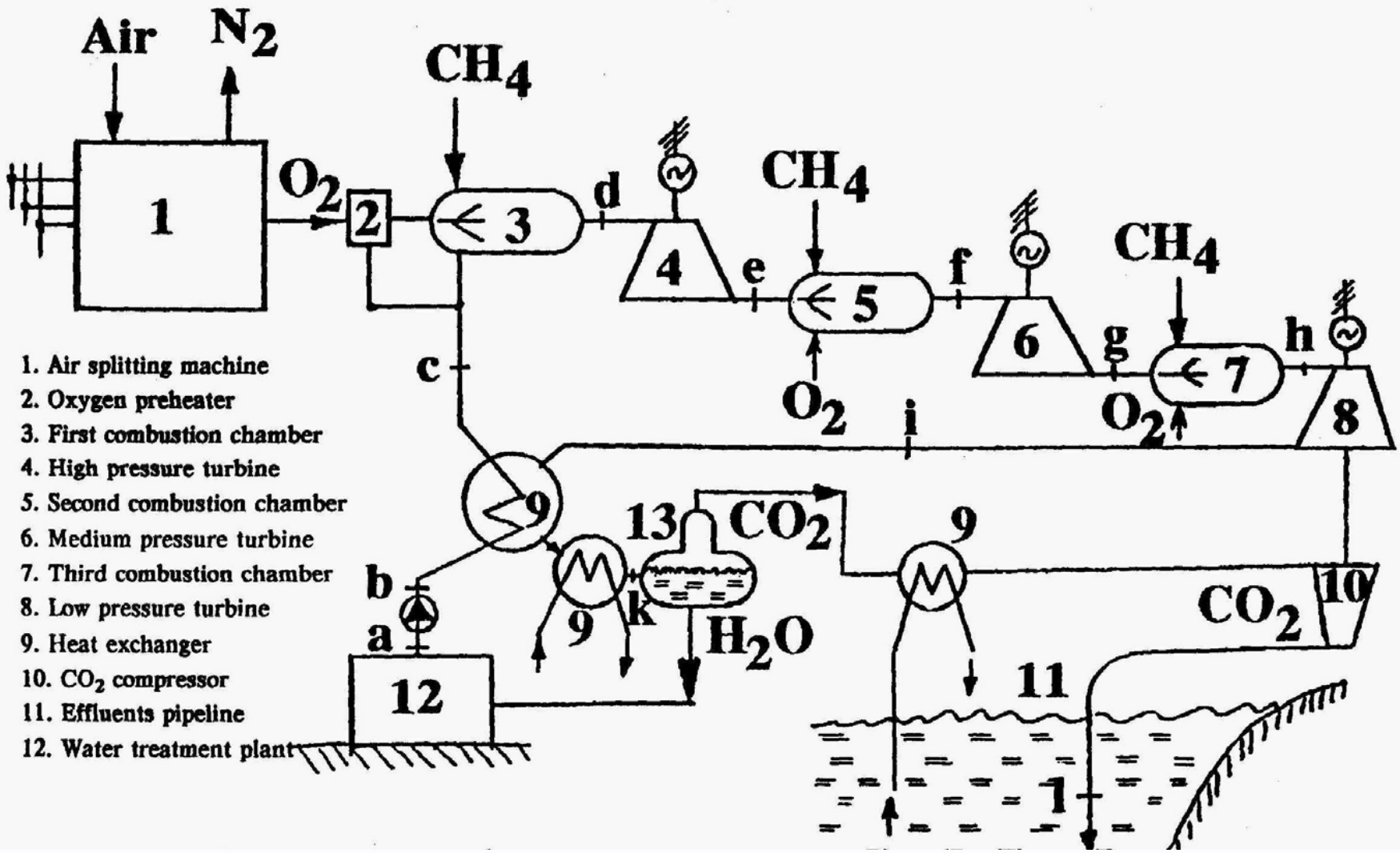
Air
N2
CH4
O2
1
2
3
d
4
e
CH4
5
f
6
g
CH4
7
h
8
O2
O2
c
i
9
13
CO2
9
b
a
9
k
H2O
CO2
10
12
11
1
1. Air splitting machine
2. Oxygen preheater
3. First combustion chamber
4. High pressure turbine
5. Second combustion chamber
6. Medium pressure turbine
7. Third combustion chamber
8. Low pressure turbine
9. Heat exchanger
10. CO2 compressor
11. Effluents pipeline
12. Water treatment plant

CO_2 Recirculation

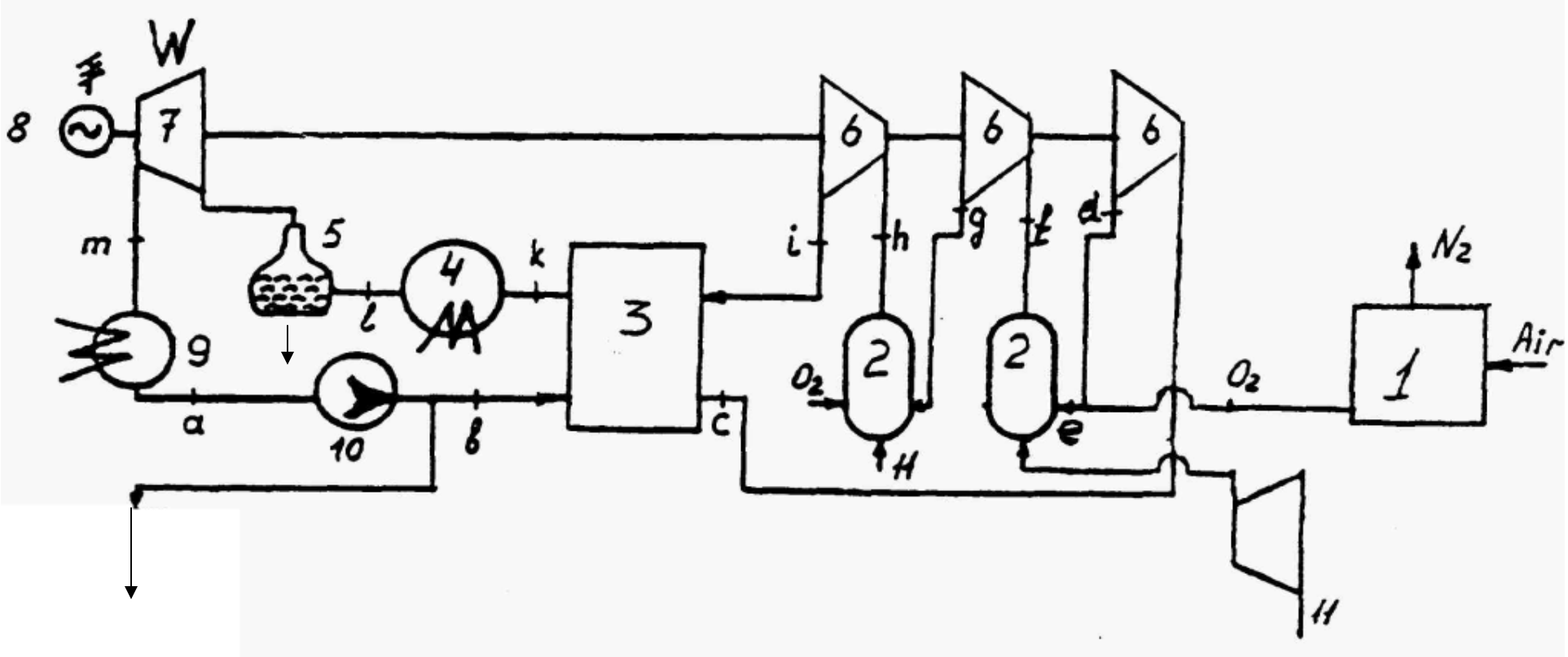

MATIANT

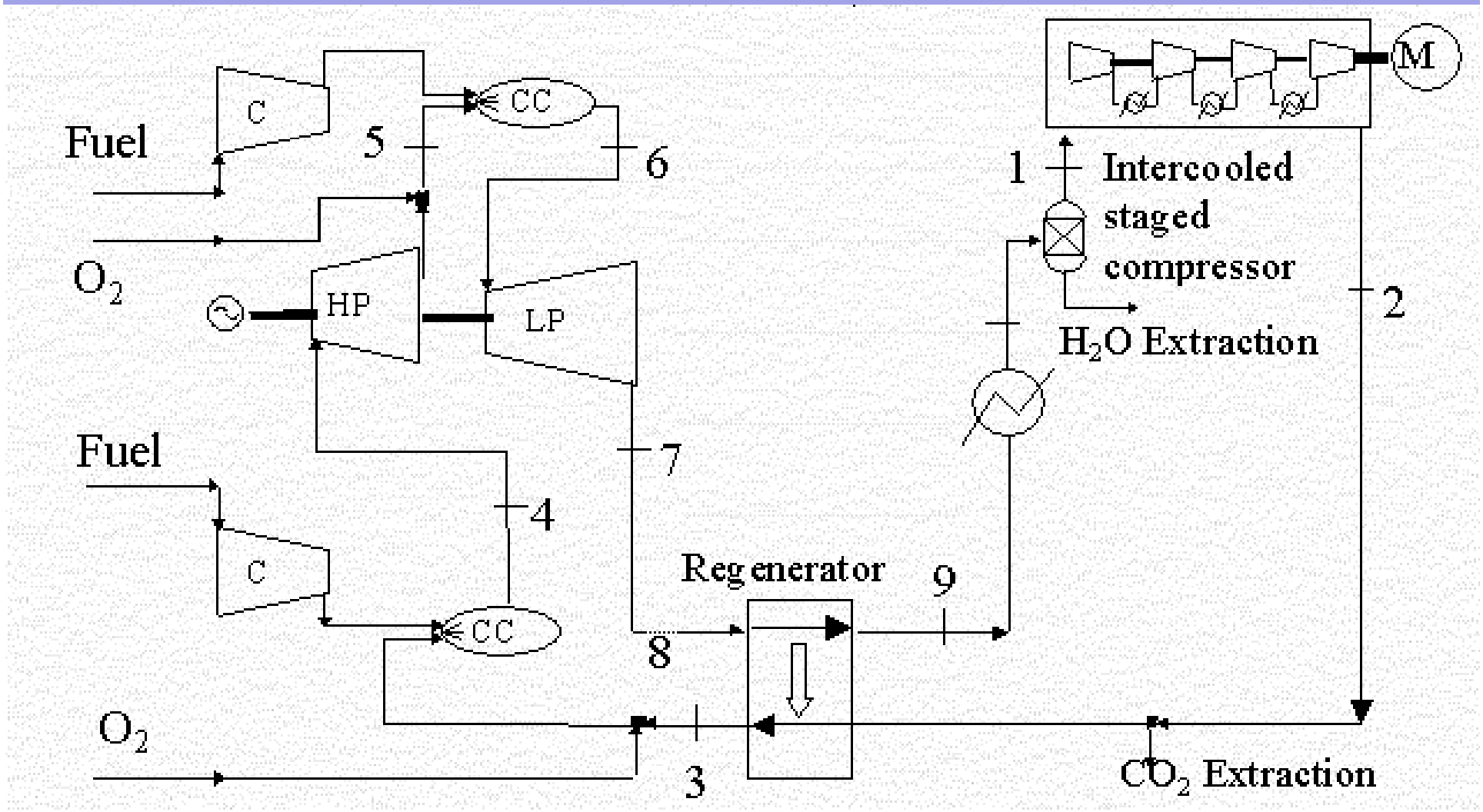
Fuel
C
5
CC
6
O_2
HP
LP
M
1
Intercooled
staged
compressor
2
H_2O Extraction
Fuel
7
4
C
Regenerator
9
CC
8
O_2
3
CO_2 Extraction

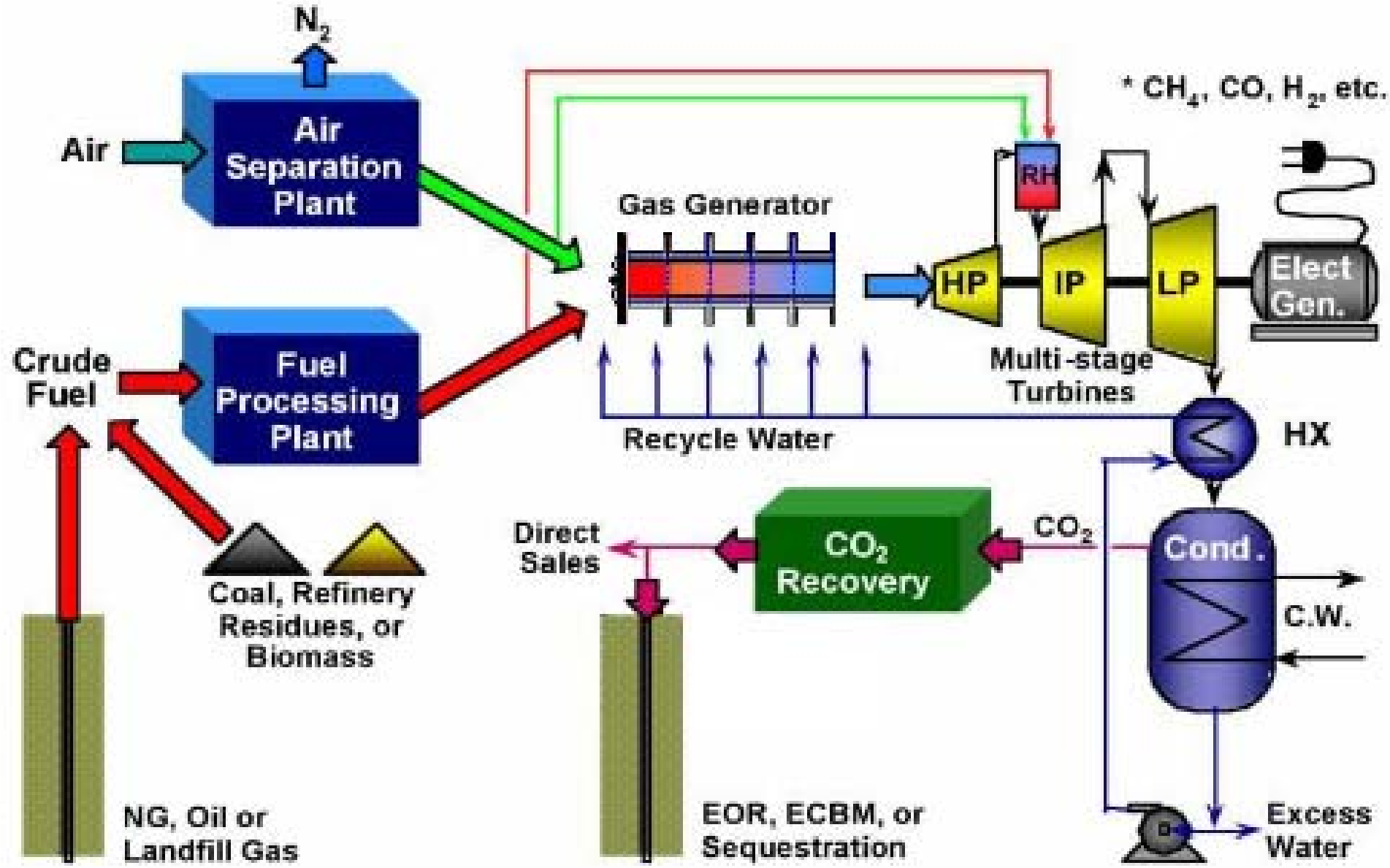
N_2
Air
Air Separation Plant
Crude Fuel
Fuel Processing Plant
Coal, Refinery Residues, or Biomass
NG, Oil or Landfill Gas
Gas Generator
Recycle Water
RH
HP
IP
LP
Multi-stage Turbines
* CH_4, CO, H_2, etc.
Elect Gen.
HX
Cond.
C.W.
Excess Water
CO_2
CO_2 Recovery
Direct Sales
EOR, ECBM, or Sequestration

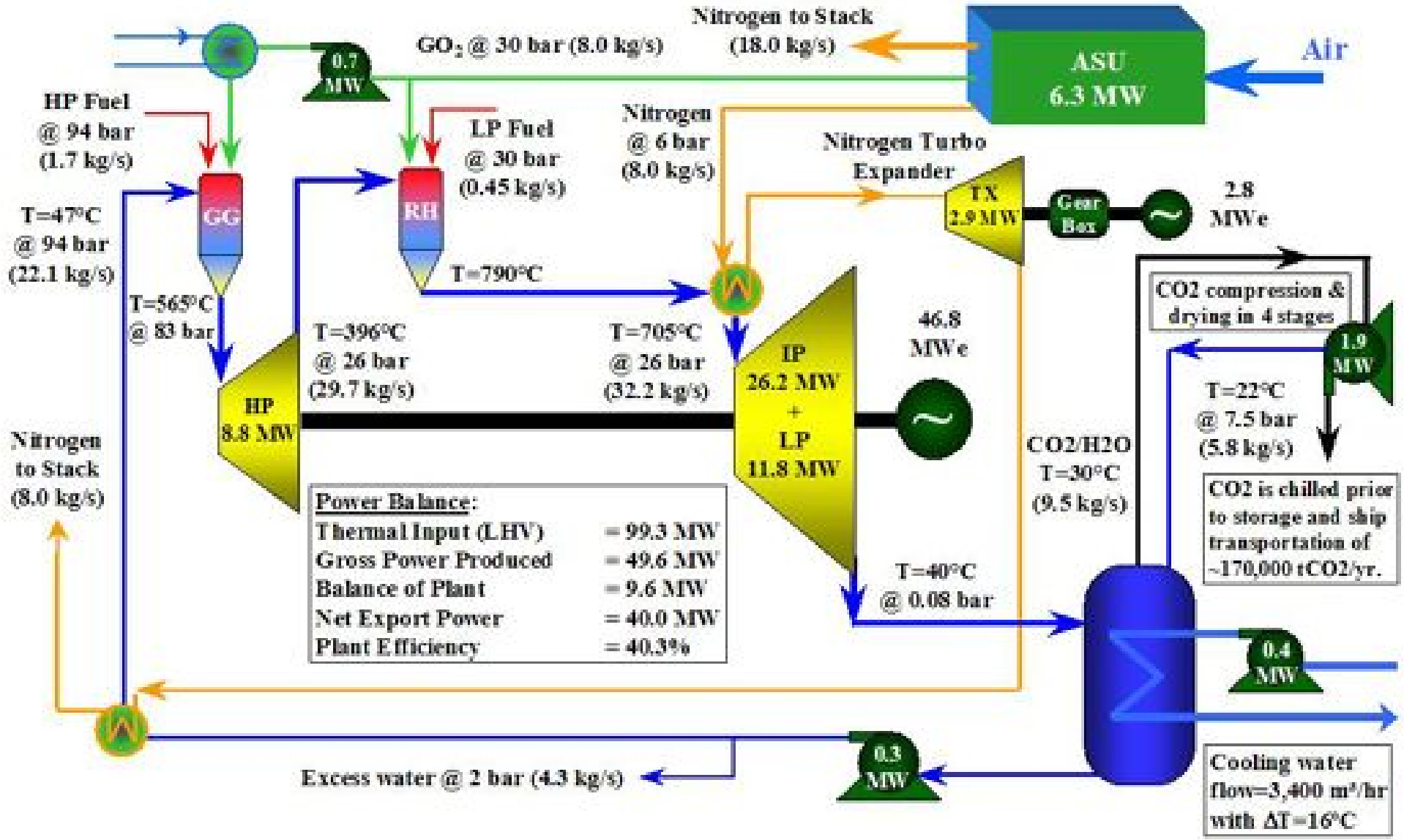
Nitrogen to Stack
(18.0 kg/s)
GO_2 @ 30 bar (8.0 kg/s)
0.7 MW
ASU
6.3 MW
Air
HP Fuel
@ 94 bar
(1.7 kg/s)
LP Fuel
@ 30 bar
(0.45 kg/s)
Nitrogen
@ 6 bar
(8.0 kg/s)
Nitrogen Turbo
Expander
TX
2.9 MW
Gear
Box
2.8
MWe
T=47°C
@ 94 bar
(22.1 kg/s)
GG
RH
T=790°C
T=565°C
@ 83 bar
T=396°C
@ 26 bar
(29.7 kg/s)
T=705°C
@ 26 bar
(32.2 kg/s)
46.8
MWe
IP
26.2 MW
+
LP
11.8 MW
HP
8.8 MW
CO2 compression &
drying in 4 stages
1.9
MW
T=22°C
@ 7.5 bar
(5.8 kg/s)
Nitrogen
to Stack
(8.0 kg/s)
CO2/H2O
T=30°C
(9.5 kg/s)
CO2 is chilled prior
to storage and ship
transportation of
~170,000 tCO2/yr.
Power Balance:
Thermal Input (LHV) = 99.3 MW
Gross Power Produced = 49.6 MW
Balance of Plant = 9.6 MW
Net Export Power = 40.0 MW
Plant Efficiency = 40.3%
T=40°C
@ 0.08 bar
0.4
MW
0.3
MW
Excess water @ 2 bar (4.3 kg/s)
Cooling water
flow=3,400 m³/hr
with ΔT=16°C

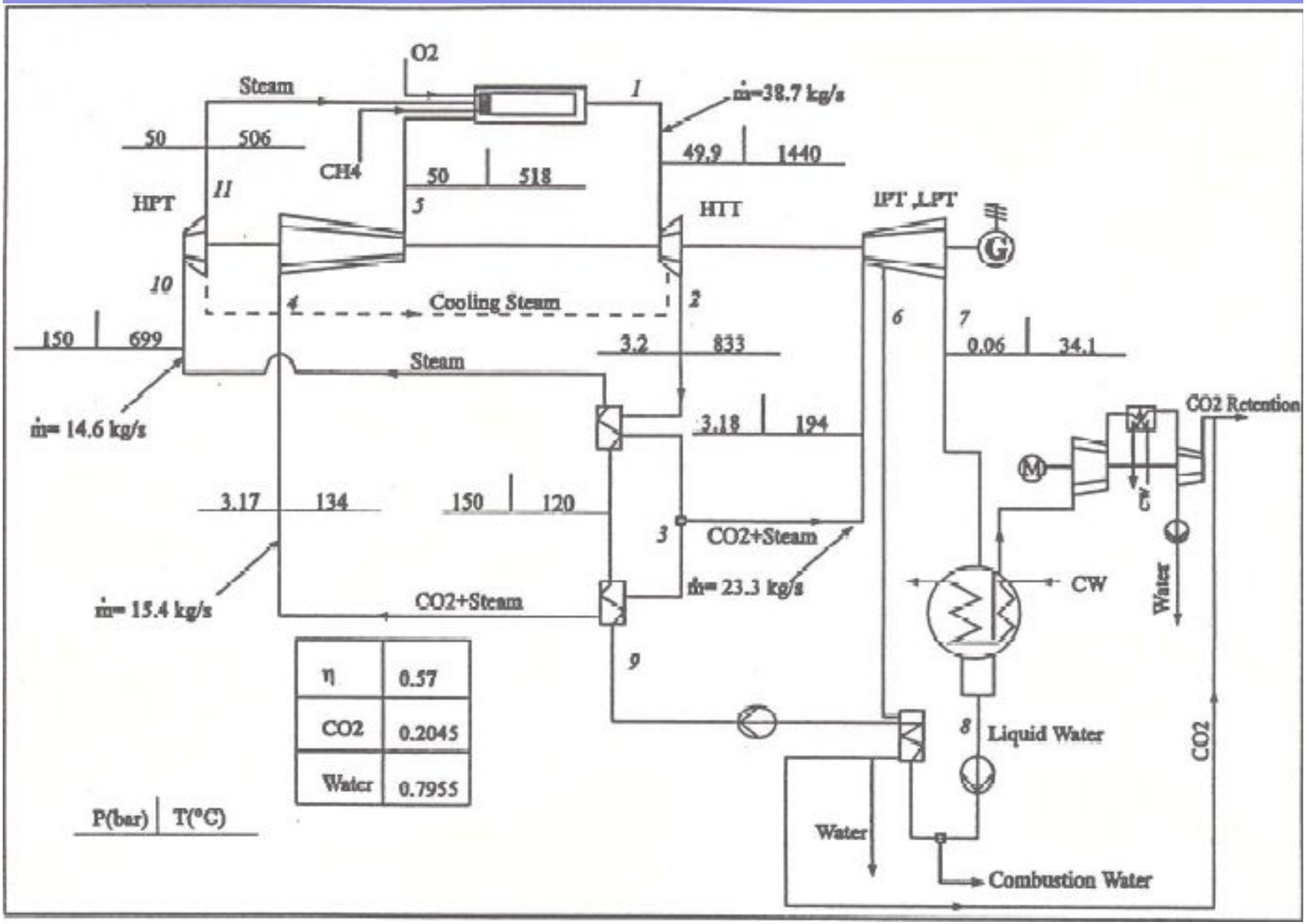

η	0.57
CO2	0.2045
Water	0.7955

Graz cycle development

- Graz group :
  - Institute for Thermal Turbomachinery and Machine Dynamics at Graz University of Technology
- Have developed theory for CO_2 / H_2O turbines
- Many different ratios as cycle developed
  - Highest CO_2 content was 77%
  - 1300 C, 40 bar
  - Extensive technical detail in Jericha, 2003

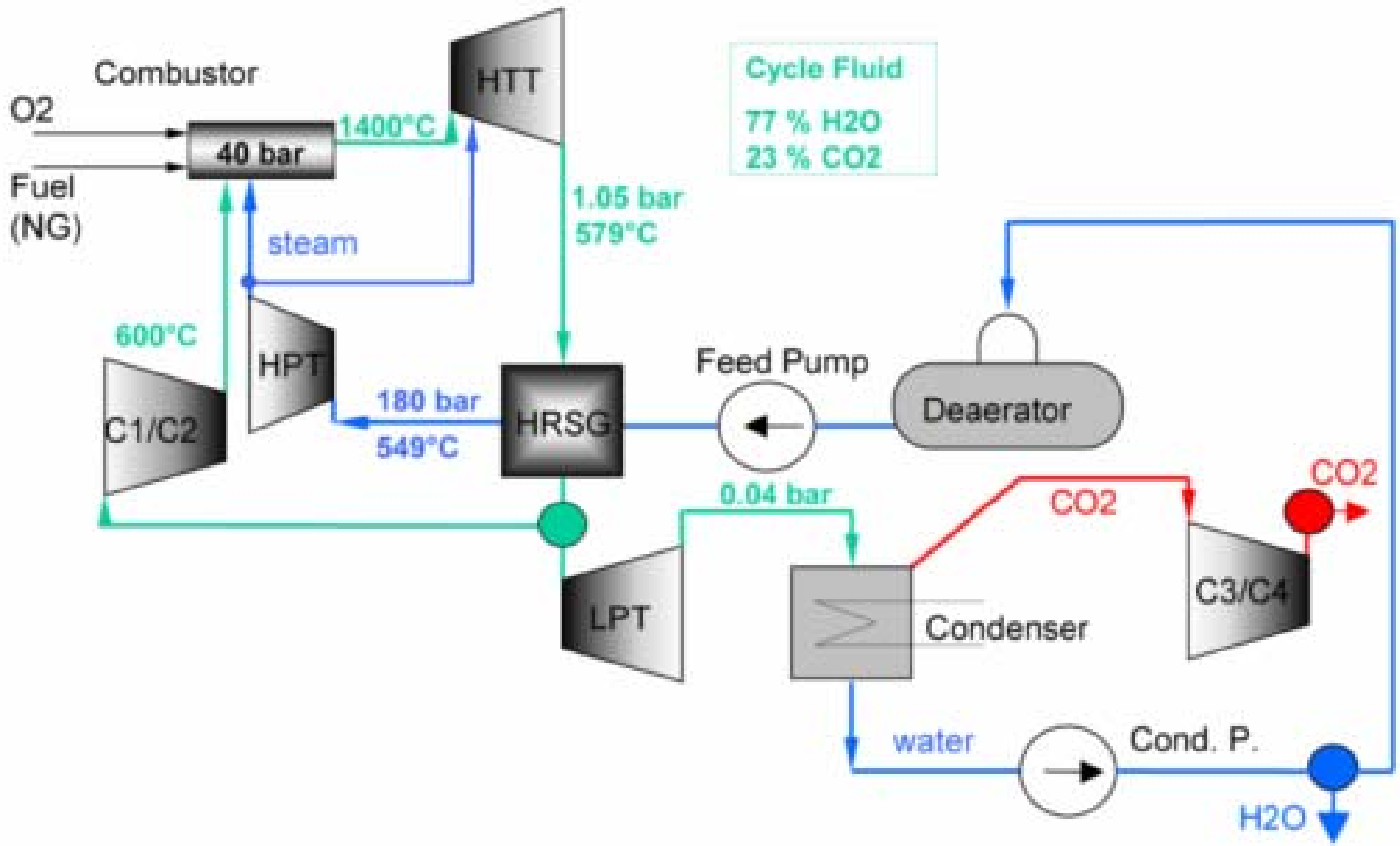

Principle flow scheme of S-Graz Cycle power plant

State of the art - CO_2 recirculation

- As yet no plants built
- Many theoretical cycles
- Graz group have developed theory on CO_2/H_2O turbines up to a 77% CO_2 fraction

State of the Art – Water recirculation

- Clean Energy Systems
  - Actually built and operate the worlds first oxycombustion plant
  - Have since developed the ZENG cycle
  - 45% efficient (Marin 2005)
  - Paper 202 earlier today

- S-Graz is very well developed theoretically
  - Graz group working with Statoil

Oxycombustion using OTMs

- Use OTMs to produce oxygen required for combustion

- Many different groups working on this

AZEP

- Advanced Zero Emissions Power
  - Different groups in many European countries
  - Each member working on a particular aspect

- Basically a Rankine cycle
- Air turbocompressor cycle

AZEP

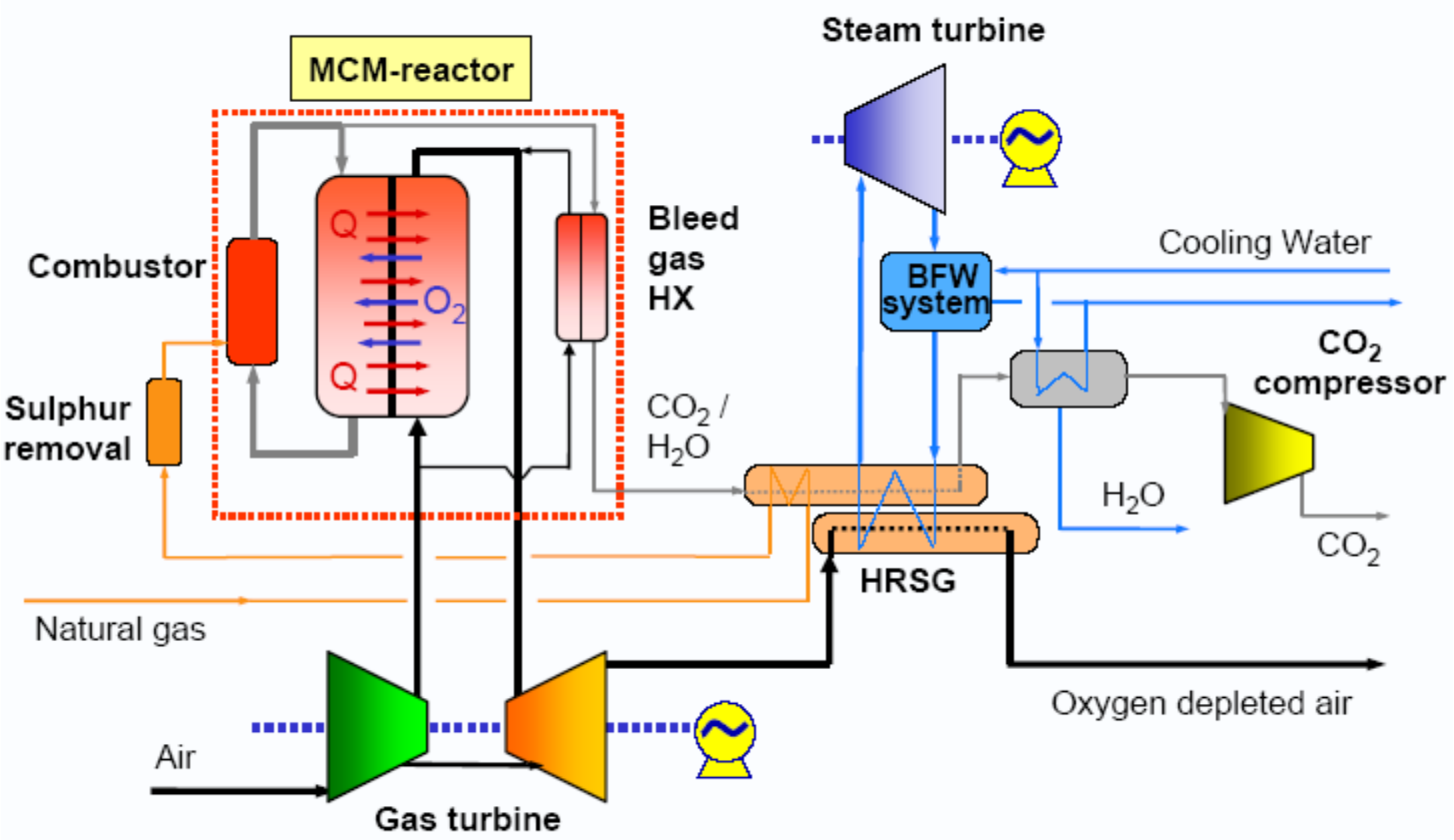
MCM-reactor
Steam turbine
Combustor
Q
O_2
Q
Bleed
gas
HX
Cooling Water
BFW
system
CO_2
compressor
Sulphur
removal
CO_2 /
H_2O
H_2O
CO_2
HRSG
Natural gas
Oxygen depleted air
Air
Gas turbine

ZEITMOP

- Zero Emissions Ion Transport Membrane Oxygen Power
- First introduced by Yantovksi (2003)
  - Gas turbine cycle
  - Air turbocompressor
  - Bottoming CO_2 Rankine cycle
  - A lot of recirculated CO_2
- OTM unit separate from combustion chamber
  - Combustion temperature not limited

ZEITMOP

- Efficiency calculated as 50%
- Not yet optimised

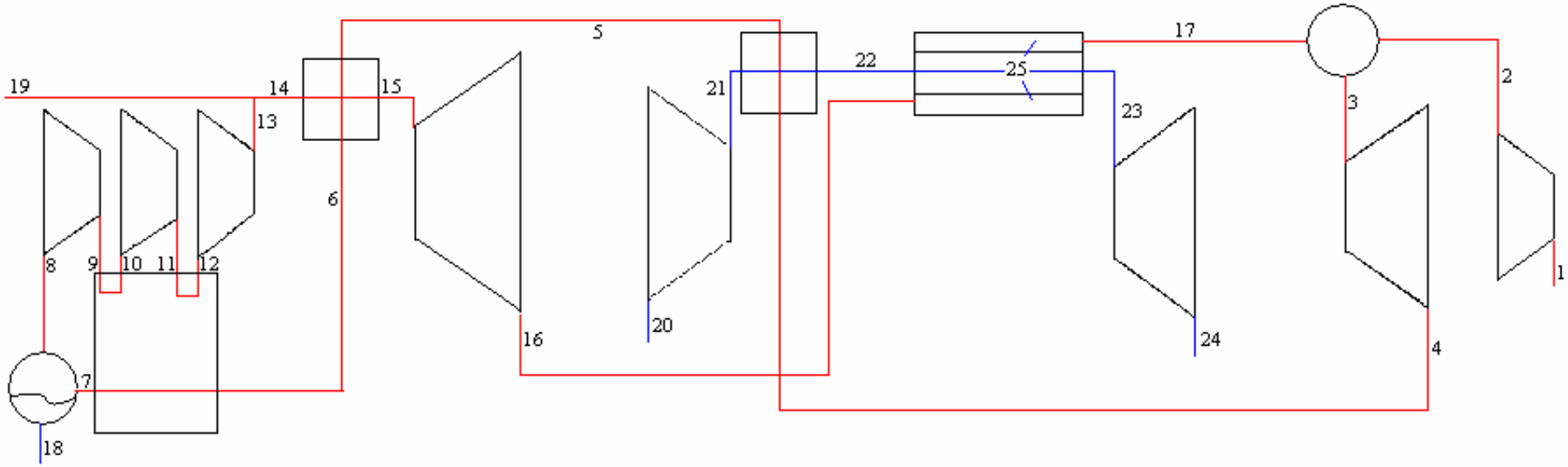

Coal fired plants using OTMs

- OxycoalAC – Aachen (AC), Germany
  - Renz, 2004
  - 41% efficiency for 400MW plant
  - Uses pulverised coal
- Milano cycle – Politecnico di Milano, Italy
  - Romano, 2005
  - 41% efficiency for 400MW plant
  - Uses fluidised bed combustion

- Basically a Rankine cycle

Oxycoal-AC

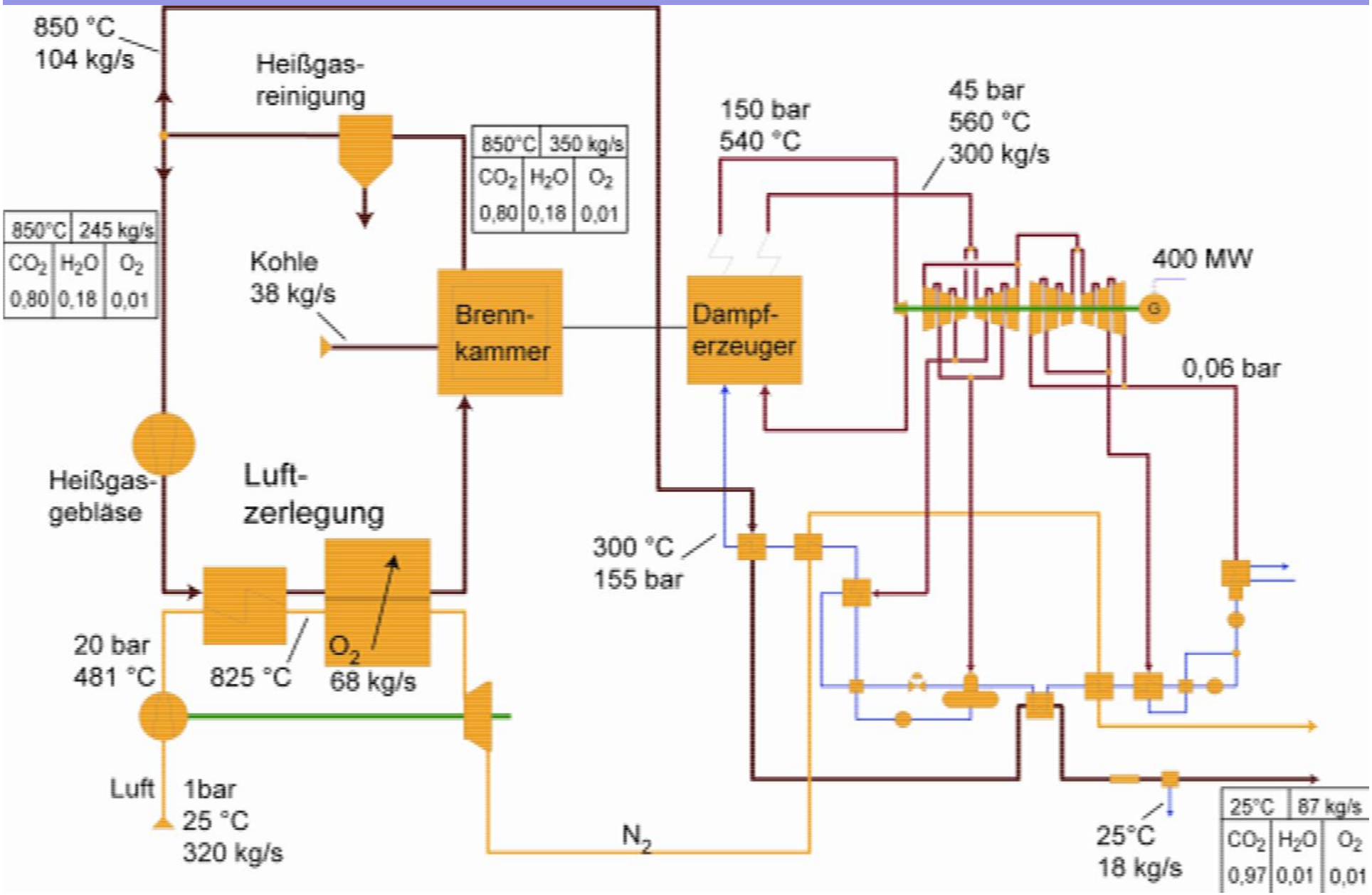
850 °C
104 kg/s
Heißgas-
reinigung
850°C | 350 kg/s
CO2 | H2O | O2
0,80 | 0,18 | 0,01
850°C | 245 kg/s
CO2 | H2O | O2
0,80 | 0,18 | 0,01
Kohle
38 kg/s
Brenn-
kammer
Dampf-
erzeuger
150 bar
540 °C
45 bar
560 °C
300 kg/s
400 MW
0,06 bar
Heißgas-
gebläse
Luft-
zerlegung
300 °C
155 bar
20 bar
481 °C
825 °C
O2
68 kg/s
Luft
1bar
25 °C
320 kg/s
N2
25°C
18 kg/s
25°C | 87 kg/s
CO2 | H2O | O2
0,97 | 0,01 | 0,01

Milano cycle

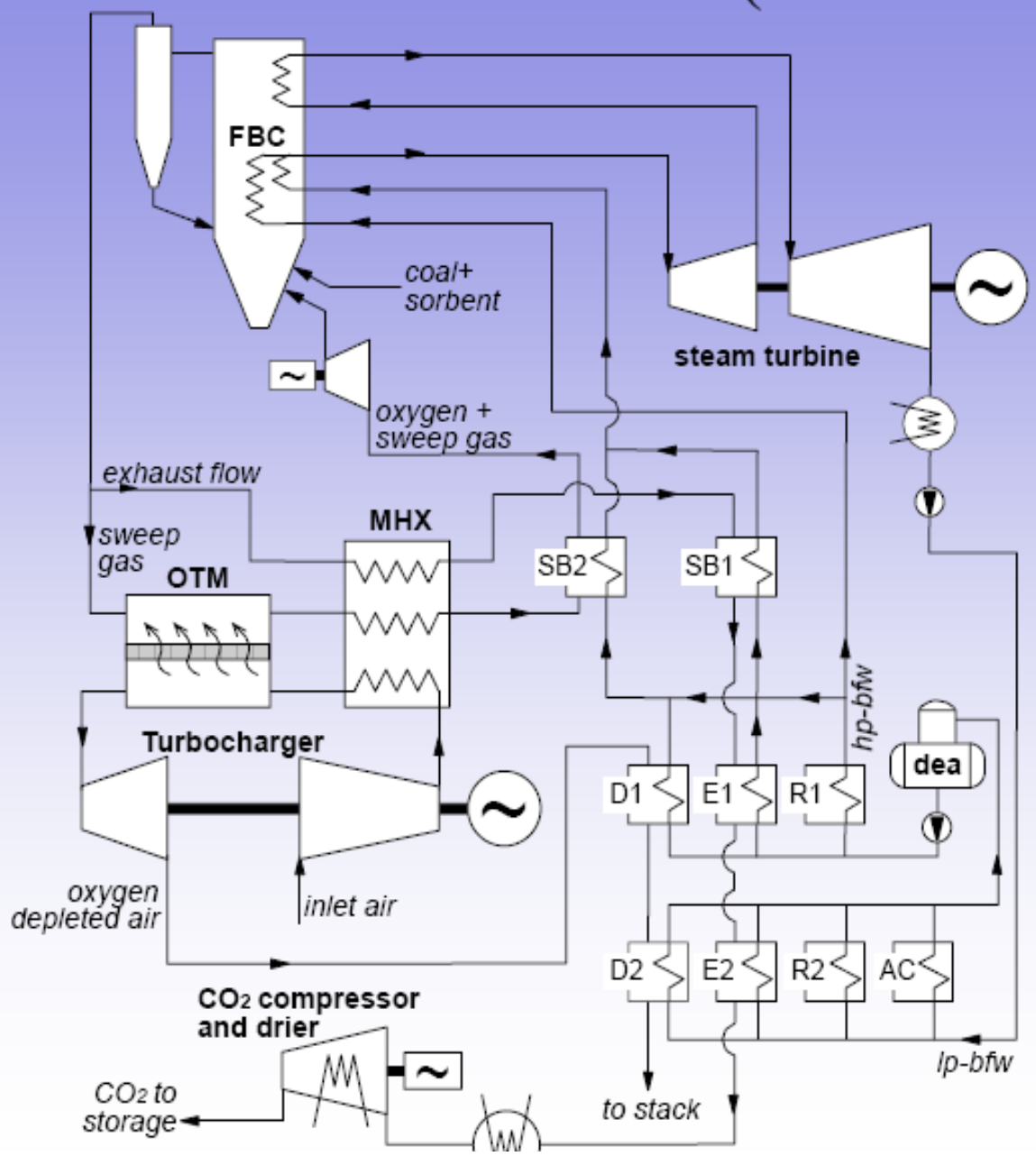

Zero Emission Power Plants with OTMs

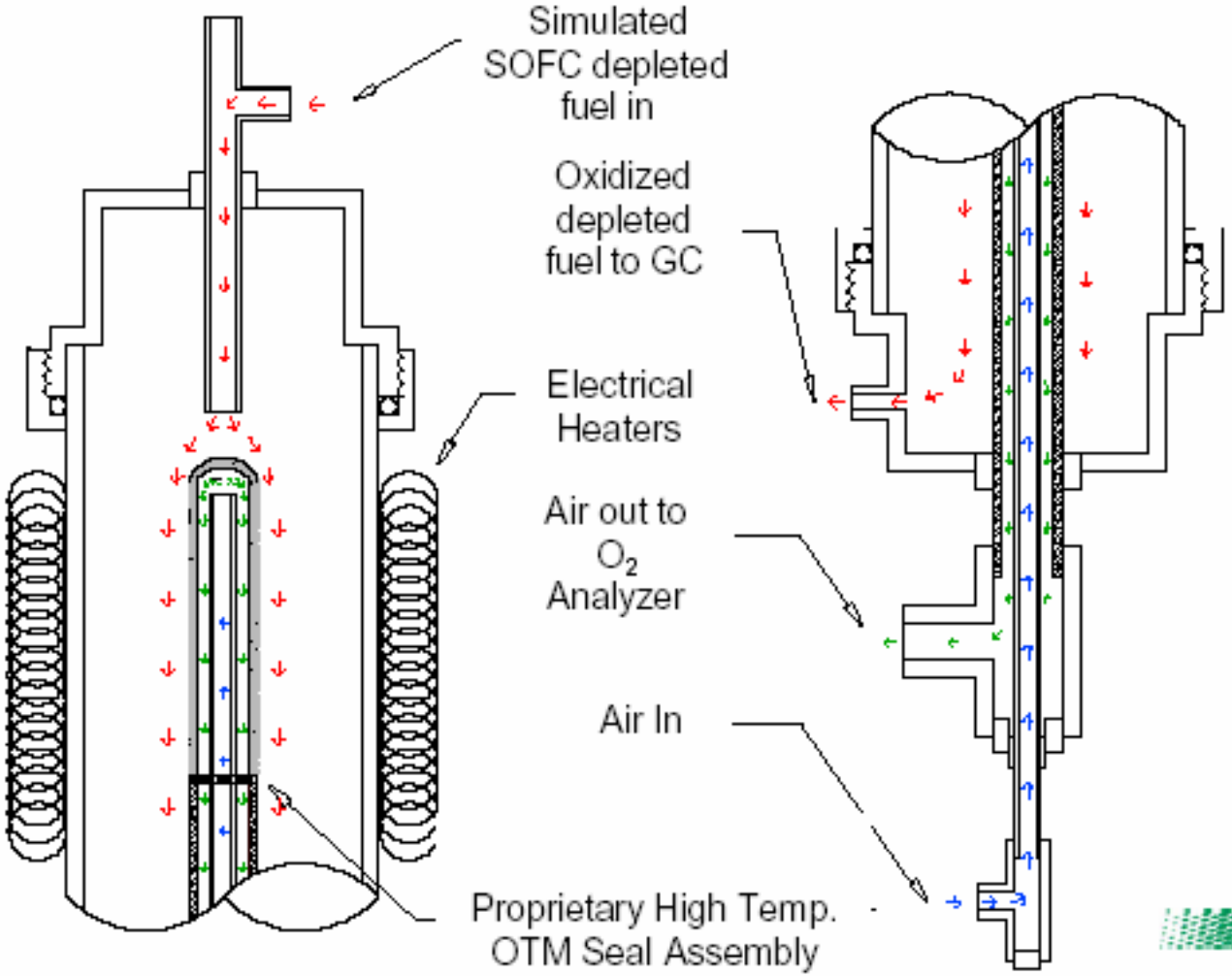

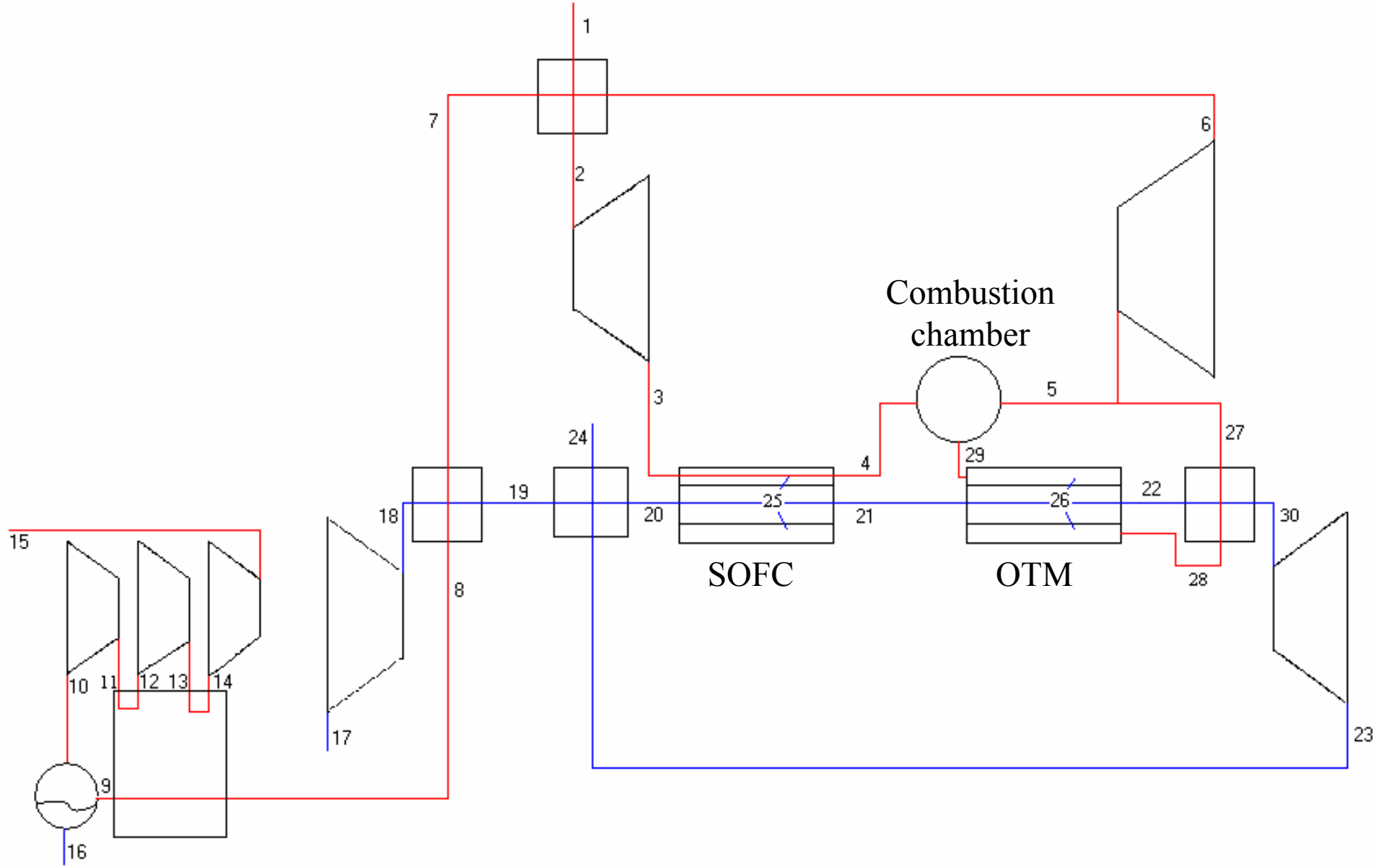
1
2
3
4
5
6
7
8
9
10
11
12
13
14
15
16
17
18
19
20
21
22
23
24
25
26
27
28
29
30
Combustion chamber
SOFC
OTM

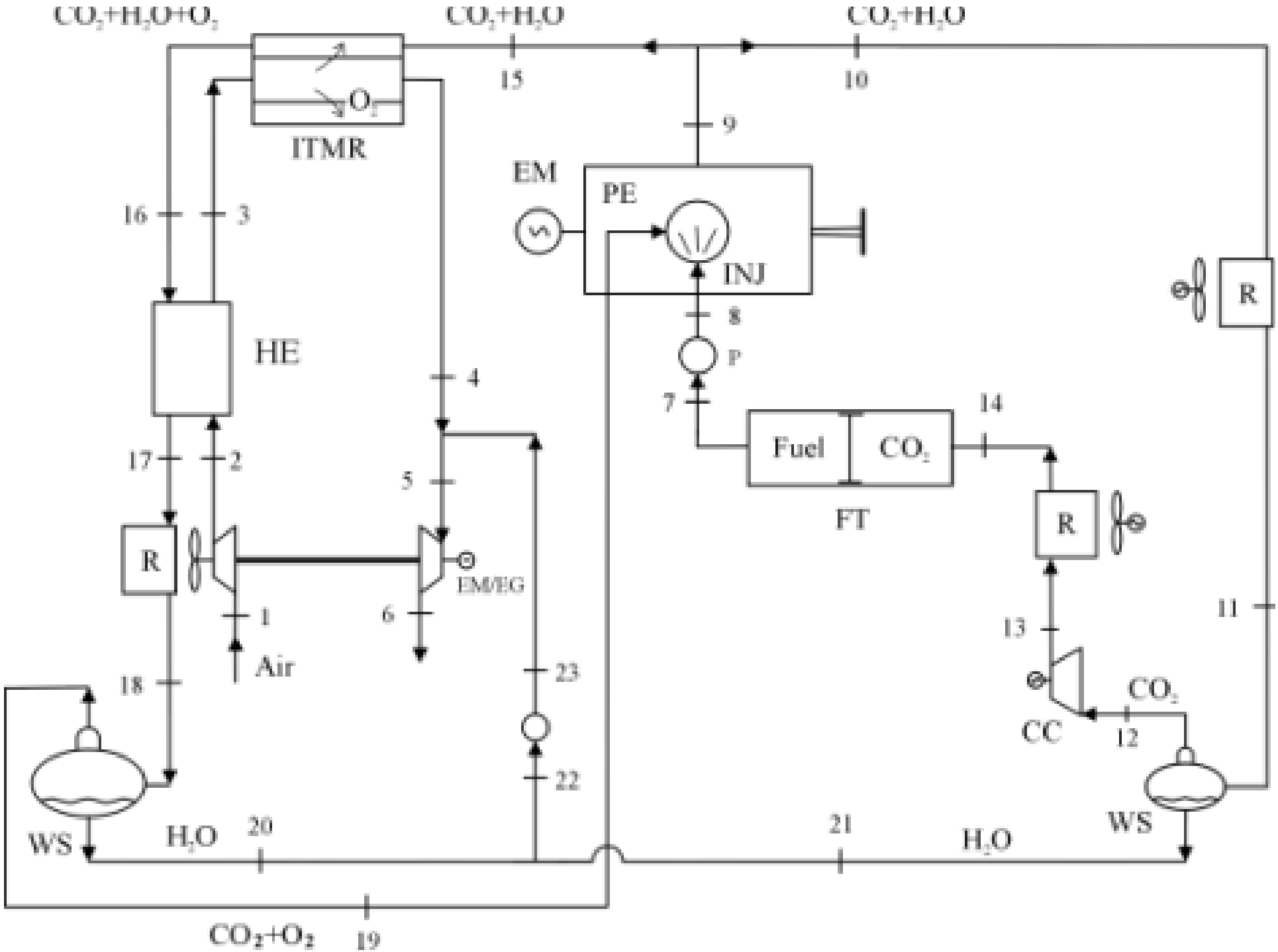
CO2+H2O+O2
CO2+H2O
CO2+H2O
ITMR
O2
15
10
9
EM
PE
INJ
16
3
HE
4
8
P
7
14
Fuel
CO2
FT
R
17
2
5
R
EM/EG
1
6
Air
13
11
18
23
CO2
CC
12
22
WS
H2O
20
21
H2O
WS
CO2+O2
19

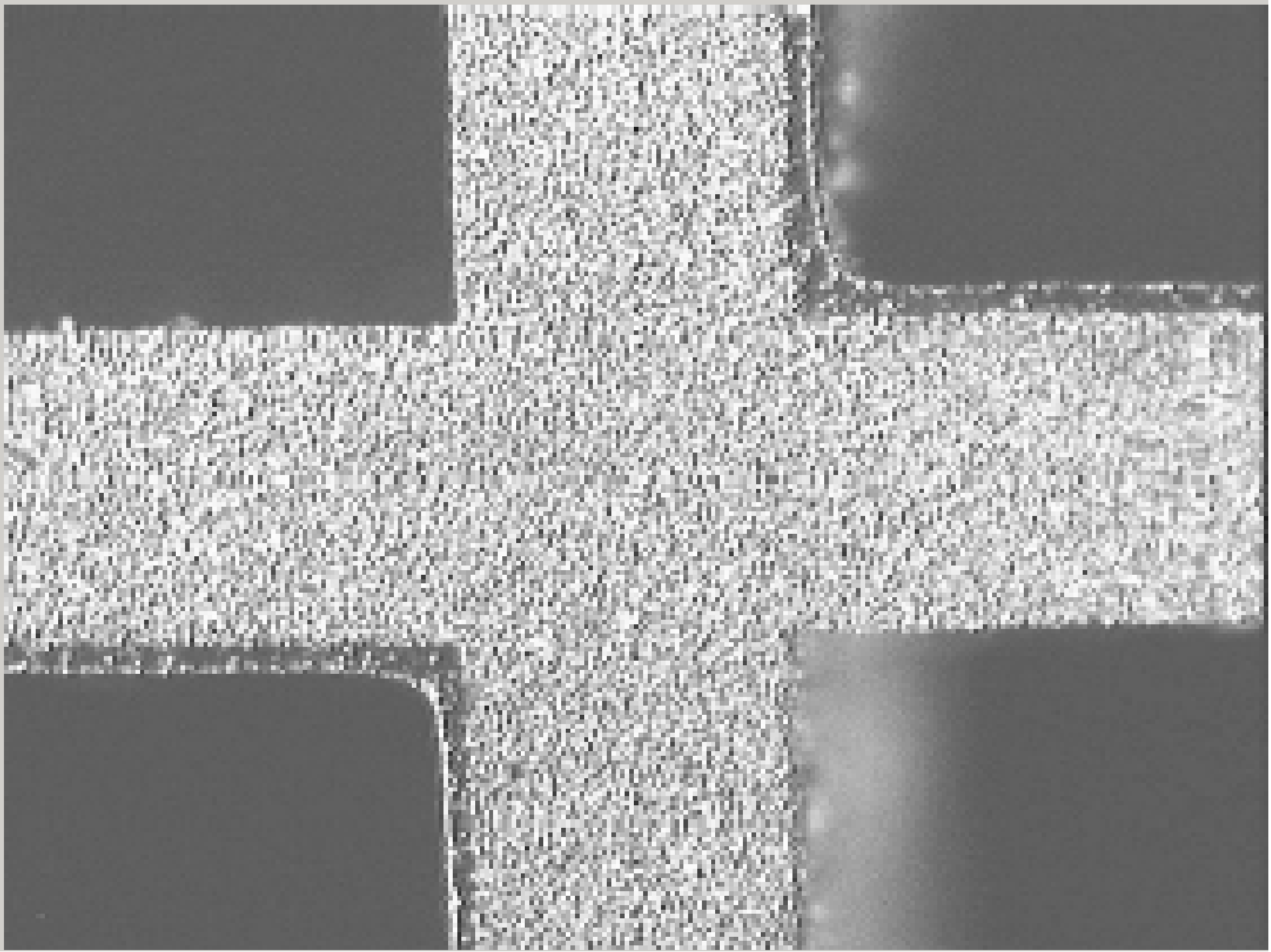

10a

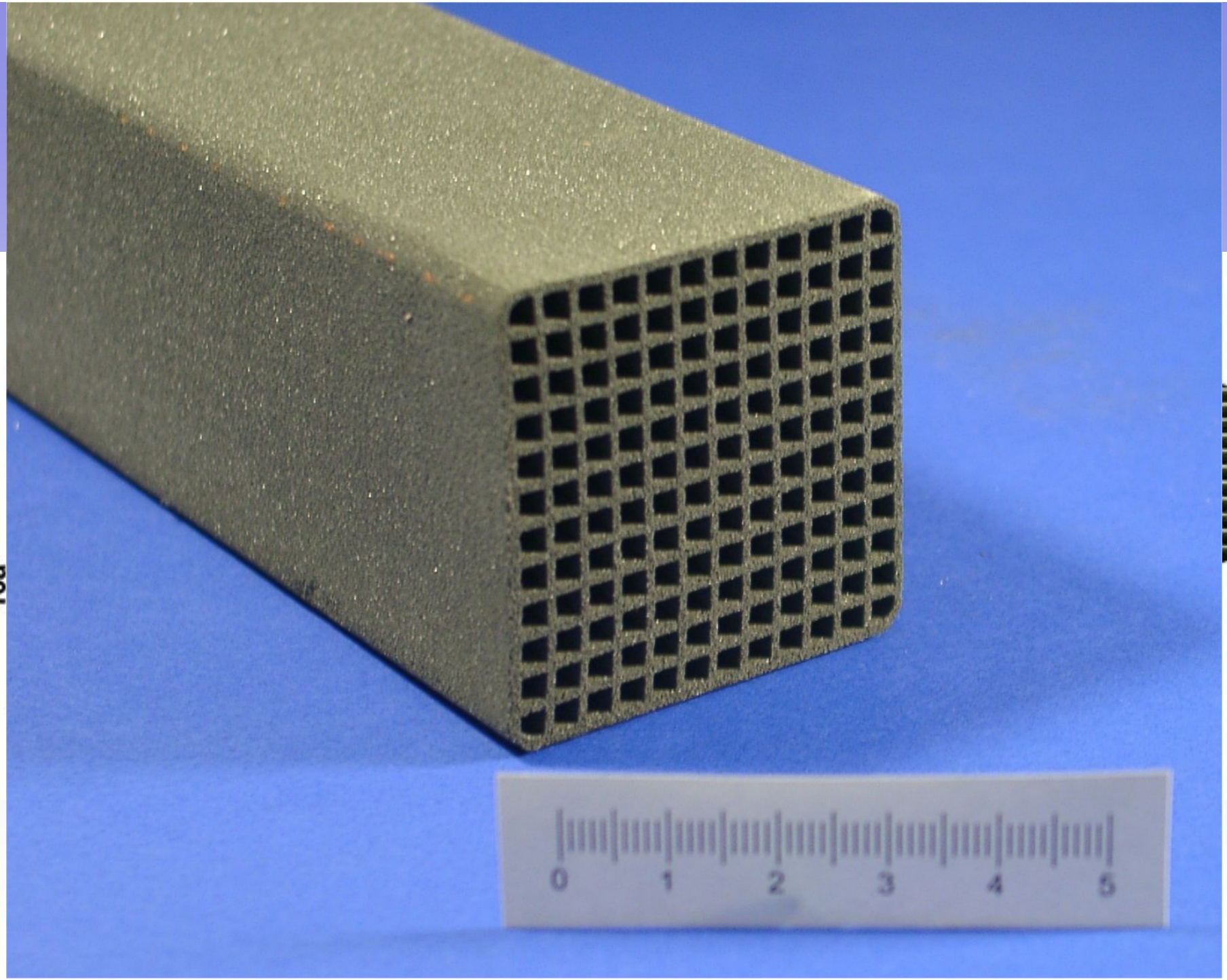

Current Sate of the Art of OTM Oxycombustion plants

- AZEP 50% calculated
  - Much work done on membrane system & theoretical design
- ZEITMOP 50% calculated (not optimised)
- Milano/Oxycoal AC 41% calculated
  - Work done on membrane system
- ZESOFC at laboratory scale
- OFFCET simplified calculations imply acceptable η
- ZEMPES 47% calculated

Current state of the art of OTM oxycombustion plants

- Many theoretical cycles
  - Simulations
- Some at laboratory scale
- As of yet none built

Oxygen Ion Transport Membranes

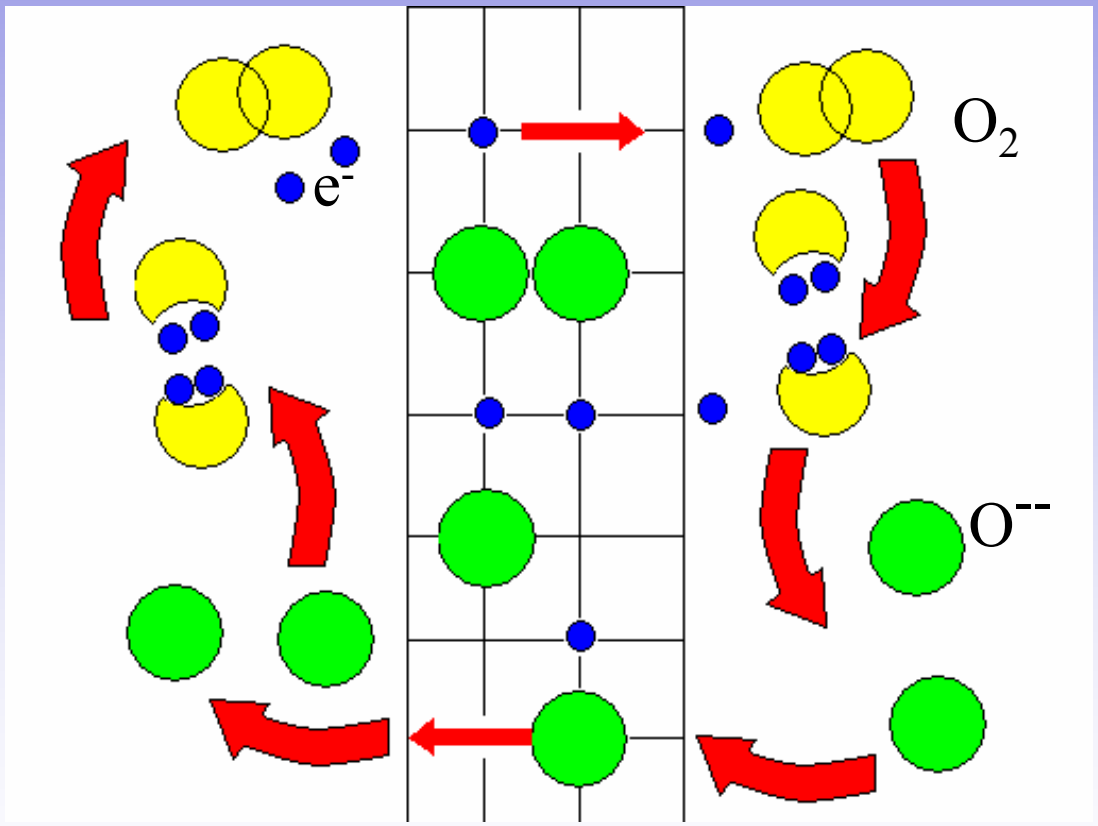

References

- Anderson R.E., Doyle S.E., Pronske K.L., 2004, "Demonstration and Commercialization of Zero-Emission Power Plants," *29th International Technical Conference on Coal Utilization & Fuel Systems*, April 18-22, Clearwater, FL, USA
- Berry G.F., Wolsky A.M., 1986, "Modelling heat transfer in an experimental coal-fired furnace when CO2/O2 mixture replace air", *WAM ASME*, Anaheim CA, Paper 86-WA/HT-51.
- Bolland O., Saether, 1992, "New concepts for natural gas fired power plants which simplify the recovery of carbon dioxide," *En. Conv. Mgmt,* Vol. 33, No. 5-8, pp. 467-475
- CO2 Norway, 2005, "Overview of the Phase-1 'Base Case' Configuration", *Description of ZENG Project on CO2 Norway website,* updated 23/3/2005. http://www.co2.no/default.asp?UID=49&CID=36
- Degtiarev V.L., Grybovsky V.P., 1967, "Carbon dioxide semi-closed power plant", Author sertif., *USSR* No. 295 897 of July 28, 1967, published in *Bull. Inventions* No. 8, F01k13/00, Co1b 3/00, Nov. 12, 1971.
- Foy, K. and McGovern, J., 2006, "OFFCET – A novel Power Production Cycle Concept", 5th Annual Conference on Carbon Capture and Sequestration, May 8th – 11th, Alexandria, USA, Paper 087
- Jericha, H., Sanz, W., Woisetschläger, J, Fesharaki, M., 1995, "CO_2 - Retention Capability of CH_4/O_2 – Fired Graz Cycle", CIMAC Conference Paper, Interlaken, Switzerland
- Jericha, H., Göttlich, E., Sanz, W., Heitmeir, F., 2003, "Design Optimisation of the Graz Cycle Prototype Plant", ASME Paper 2003-GT-38120, ASME Turbo Expo 2003, Atlanta, USA, ASME Journal of Engineering for Gas Turbines and Power, Oct. 2004, Vol. 126, pp. 733-740

References

- Marchetti C., 1979, "Constructive solutions to the CO_2 problem", in *Man's Impact on Climate*, Elsevier, New York.
- Marin O. Bourhis Y., Perrin N., Di Zanno P., Viteri F., Anderson R., 2005, "High Efficiency, Zero Emission Power Generation Based on a High-Temperature Steam Cycle," http://www.cleanenergysystems.com/2005/mediakit/AL_CESClearwaterPaper.pdf (Accessed 9/12/05).
- Mathieu P., 1998, "Presentation of an innovative Zero-Emission cycle for mitigation the global climate change.," *Int. Journ. of Applied Thermodyn*., Vol. 1, No.1-4
- *Mathieu P., van Loo F., 2005, "Modeling of an IGCC Plant based on oxy-fuel combustion combined cycle," Proc. ECOS 2005, June 20-22, Trondheim, Norway.*
- Nakayama S. et al., 1992, "Pulverized coal combustion in O_2/CO_2 mixture on a power plant for CO_2 recovery," *Energy conv. Mgmt.,* Vol. 33, No. 5-8, pp. 379-386.
- Pechtl P., 1991, „CO_2 emissionsminderung," *Erdol und Kohle Petrochemie*, H. 4, Apr., pp. 159-162.
- Renz U., 2004, "Entwicklung eines CO_2-emissionsfreien Kohleverbrennungs-processes zur Stromerzeugung in einem Verbundvorhaben der RWTH Aachen," *XXXVI. Kraftwerkstechnisches Kolloquium: Entwicklungpotentiale fuer Kraftwerke mit fossile Brennstoffen*, 19-20 Oct, Dresden.
- Renz U., Kneer R., Abel D., Niehuis R., Maier H., Modigell M., Peters N., 2005, "Entwicklung eines CO_2-emissionsfreien Kohleverbrennungs-processes zur Stromerzeugung," *CCS-Tagung Juelich,* Nov. 10-11, RWTH Aachen

References

- Romano M., Napoletano S, Chiesa P., Consonni S., 2005, "Decarbonized Electricity Production from Coal by means of Oxygen Transport Membranes," *4th Annual Conference on Carbon Sequestration*, May 2-5, Alexandria VA, p. 1402.
- Shockling L., Huang K., Christie G., 2001, "Zero Emission Power Plants Using Solid Oxide Fuel cell and Oxygen transport Membranes," *Vision 21 Program Review meeting*, Nov.6, US DOE, NETL.
- Shokotov M., Yantovski E., Foy K., 2006, Forcing of Zero Emissions Piston Engine by Oxygen Enrichment in Membrane Reactor (Hi-Ox ZEMPES Project), 5th Annual Conference on Carbon Capture and Sequestration, May 8th – 11th, Alexandria, USA, Paper 012
- Steinberg M., 1981, "A Carbon Dioxide power plant for total emission control and enhanced oil recovery," *BNL,* 30046, August.
- Sunquist S., Eklund H., Griffin T., 2004, "AZEP – an EC funded Project for Development of a CCGT Power Plant without CO2 Emissions", CAME-GT 2nd Int'l Conference on Gas Turbine Technologies, Bled, Slovenia,

  http://www.came-gt.com/2InternatConf/Tech%20Session%203/SGSundkvist.pdf
- Wolsky A., 1985, "A new approach to CO_2 recovery from combustion," *Proc. of a workshop: "Recovering Carbon Dioxide from Man-Made Sources,"* Feb. 11-13, Pacific Grove, C.A., Report ANL/CNSV-TM-166, pp. 76-81.
- Yantovski E., 1991, "The thermodynamics of fuel-fired power plants without exhaust gases," *World Clean Energy Conf. CMDC*, 4-7 Nov, Geneva, pp. 571-595
- Yantovski E., 1994c, "Energy and Exergy Currents," *NOVA Sci.,* NY.
- Yantovski E., Gorski J., Smyth B., ten Elshof J., 2003, "Zero Emission Fuel-fired Power plant with Ion Transport Membrane," *2nd Annual Conf. On Carbon Sequestration,* May 5-8, Alexandria, VA, USA