Fourth Annual Conference on Carbon Capture & Sequestration

Developing Potential Paths Forward Based on the Knowledge, Science and Experience to Date

Geologic Sequestration

CO_2 Sequestration Capacity Classification

Scott M. Frailey and Robert J. Finley

Midwest Geological Sequestration Consortium

Illinois State Geological Survey

May 2-5, 2005, Hilton Alexandria Mark Center, Alexandria Virginia

CO_2 Sequestration Capacity Classification

Scott M. Frailey and Robert J. Finley
Illinois State Geological Survey

Midwest Geological Sequestration Consortium
A DOE Regional Partnership
www.sequestration.org

Outline

- Purpose of Petroleum Reserve Classification
- Purpose of CO_2 Storage Classification
- Analogy to CO_2 Storage Classification
- CO_2 Storage Classification Example
- Recommendations

References

- Guidelines for Application of Petroleum Reserves Definitions, Society of Petroleum Evaluation Engineers, 1998
- Guidelines for Evaluation of Petroleum Reserves and Resources, Society of Petroleum Engineers, 2001

Purpose of Classification

Petroleum Reserve

- Estimate likely petroleum production and company value
  - Publicly traded companies (SEC)
  - Capital access (bank loans)
- Proper comparison on a worldwide basis of oil and gas potential production
- Provide energy-related data to government officials and agencies

CO_2 Storage Capacity

- Comparable basis for assessing CO_2 storage capacity and related market value, if any
- If a CO_2 storage industry or market evolves:
  - Verify tradable credits
  - Develop confidence in an open market to capacity
  - Protect correlative rights of the CO_2 storage capacity owners (pore space and/or adsorptive capacity)

Definitions

Petroleum Reserve	CO_2 Storage Capacity
• "…quantities of petroleum… anticipated to be commercially recovered from known accumulations from a given date forward."	• …quantities of CO_2… anticipated to be commercially stored within a known geologic formation with accessible pore space and/or adsorptive capability from a given date forward.
"…relative degree of uncertainty may be conveyed by… two principal classifications, either proved or unproved."	

Oil Reserve and ***Proposed*** CO_2 Storage Capacity Classification

- Proved: reasonable certainty; 90%
  - Developed: relates to existing wells
    - Producing/Injecting
    - Non-producing/Non-injecting
  - Undeveloped: relates to new wells on producing acreage
- Probable: “more likely than not”; 50%
- Possible: “less likely than probable”; 10%

Proposed:
Proved Storage Capacity

- ***Reasonable certainty*** of commercial storage within
  - known reservoirs
  - under current
    - economic conditions
    - operating methods
    - government regulations
- Deterministic: at least 90% probability

Proposed:
Proved Storage Capacity

- Commercial storage of a specific formation is supported by
  - actual injection or formation tests, ***or***
  - well log or core analysis that indicate storage capacity **and** the formation is analogous to other formations in the area where CO_2 storage is active or has demonstrated the ability to inject on formation tests
- Well must exist

Proposed:
Proved Storage Capacity

- *Proved developed:* All storage is expected to take place in existing wells including uncompleted formations
  - *Injecting:* storage expected within open and injecting intervals
  - *Non-injecting:* shut-in or behind-pipe storage capacity.
- *Proved undeveloped:* future wells around existing wells or deepening existing wells

Proposed:
Probable Storage Capacity

- ***More likely than not*** commercial storage indicated from geol. and engr. data
- Examples:
  - portion of an existing CO_2 storage formation that is isolated by faulting from existing wells
  - formations appear to have CO_2 injectivity from well logs, but have no core data or injection tests ***and*** are NOT analogous to proved storage in the area
- Deterministic: at least 50% probability

Proposed:
Possible Storage Capacity

- ***Less likely*** commercial storage indicated from geol. and engr. data than probable
- Examples:
  - portion of an existing CO_2 storage formation that is isolated by faulting from existing wells and may be structurally lower or outside of a trap
  - formations appear to have CO_2 injectivity but not at currently, commercial injection rates
- Deterministic: at least 10% probability

Summary Storage Capacity Classification

TOTAL RESOURCE

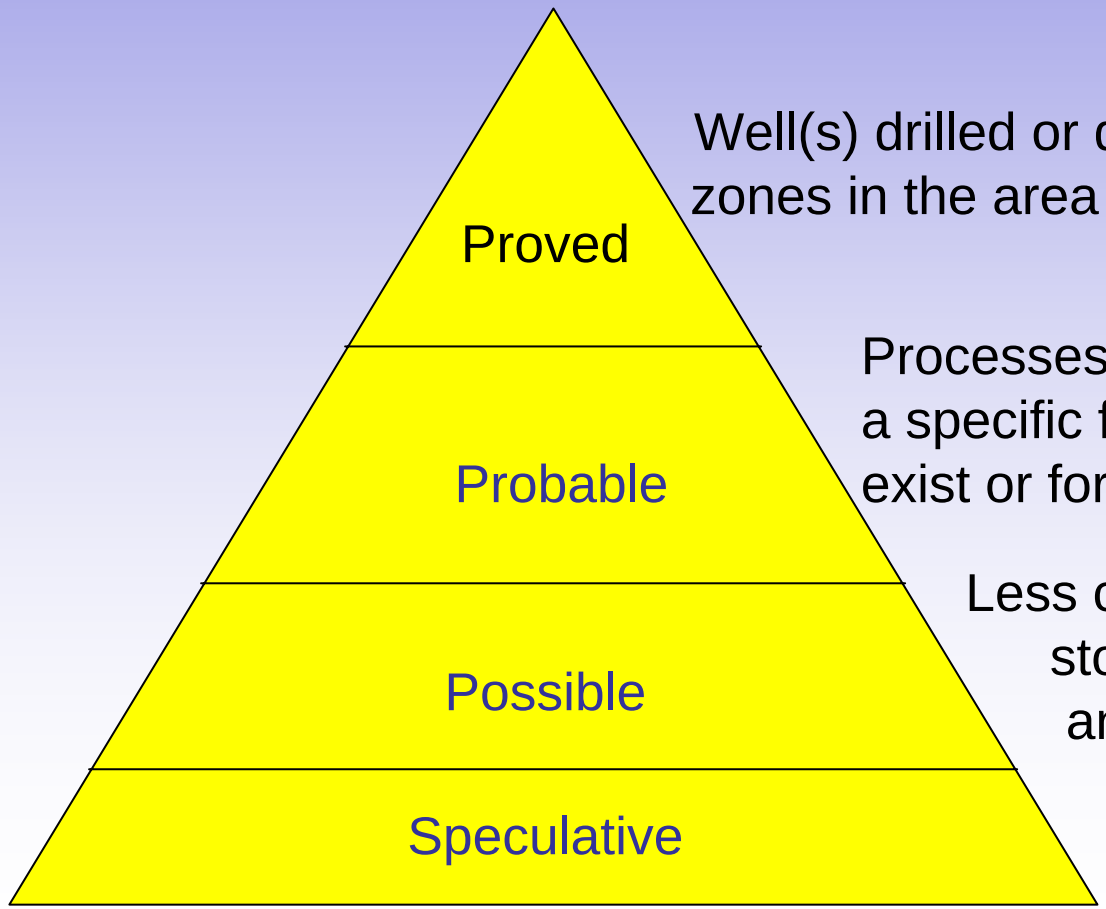

Well(s) drilled or data substantial for analogous zones in the area to including CO_2 injection test

Processes and approaches are known for a specific formation, but a well may not exist or formation not open to a well

Less certain data and/or processes of storage, noncommercial, or no analogous formations in area

Formation or province not yet active

Classification Example

- Porous and permeable saline water-bearing formation assumed to be present 4,000’ below oil-bearing reservoir
- Oil field structure is 3 miles x 5 miles with 150 feet of closure
- Seismic data exists but no wells are drilled to the formation

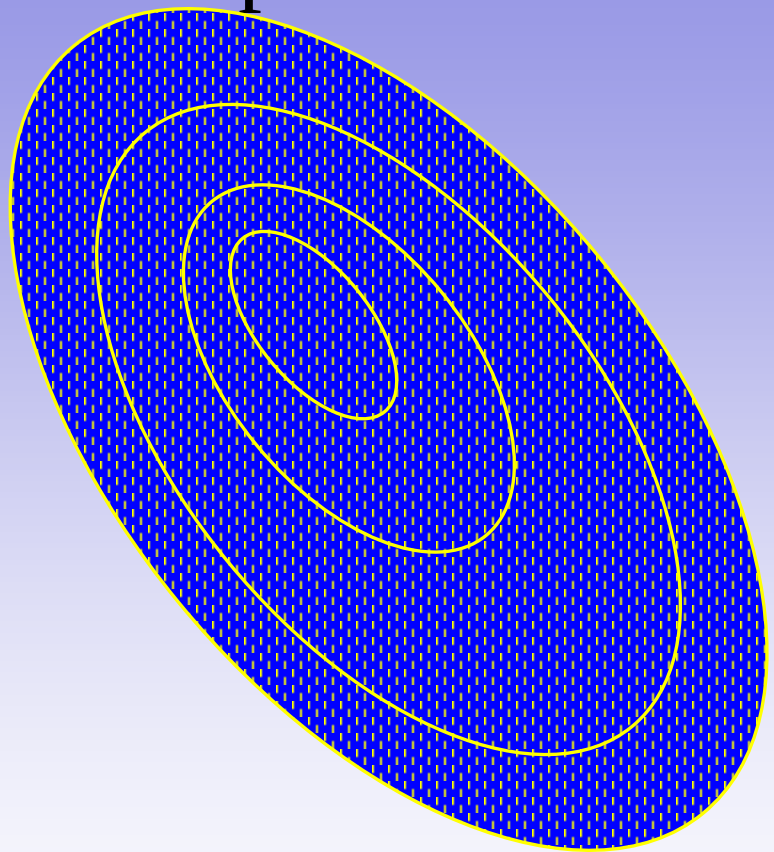

Resource only if no analogous formations with active injection in the area

Classification Example, contd.

- 1 well drilled
- DST produced water indicating permeable zone; logs show adequate 100 ft porous zones
- Geologic and engineering data indicate 640-acre injection area

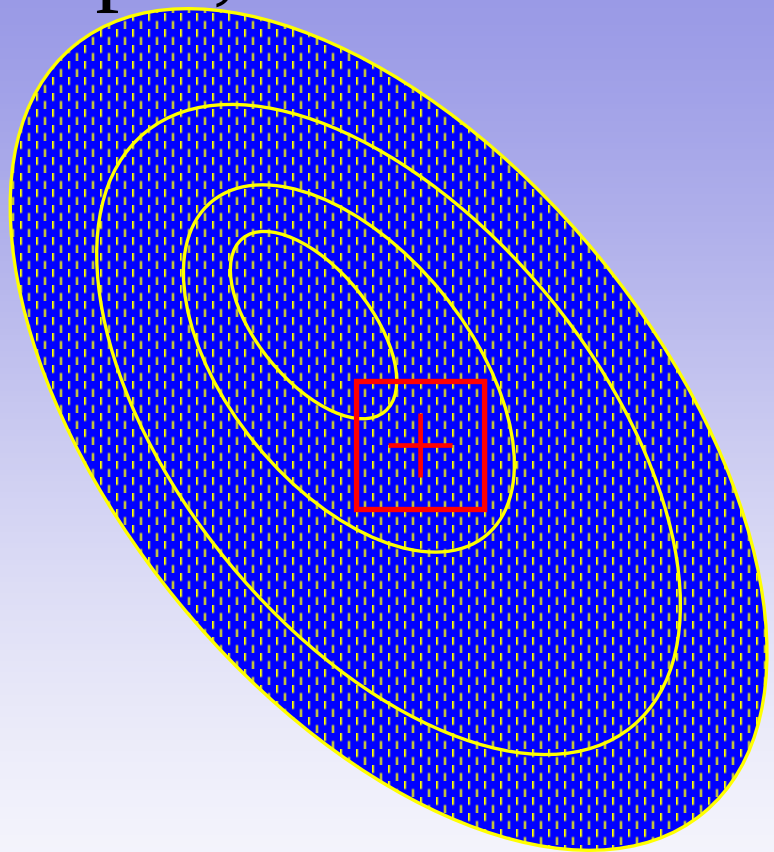

Classification Example, contd.

Before CO_2 injection begins in the first well

- **Proved**: Displaceable Saline Water Volume and dissolution of CO_2 into water corresponding to 640 acres surrounding the well
- **Probable**: Immediate undrilled, offset acreage to the depth of the spill point of the geologic structure

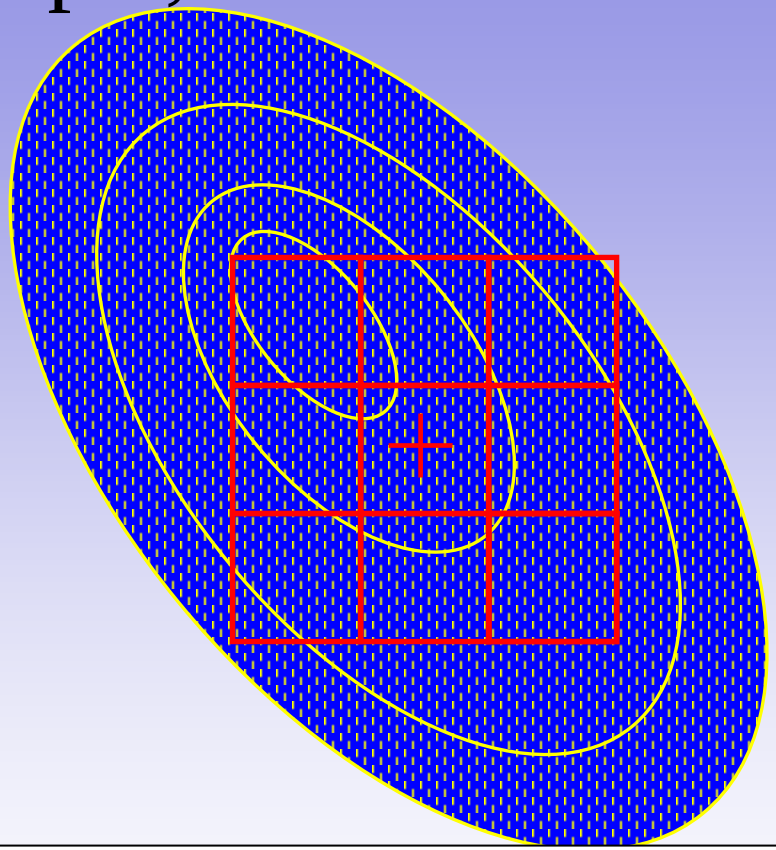

Possible: Remaining volume outside of the immediate area within the spill point

Classification Example, contd.

After CO2 injection begins in the first well

- **Proved-Developed**: Displaceable Saline Water Volume and dissolution of CO_2 into water corresponding to 640 acres surrounding the well
- **Proved-Undeveloped**: Immediate undrilled, offset acreage to the depth of the spill point of the geologic structure

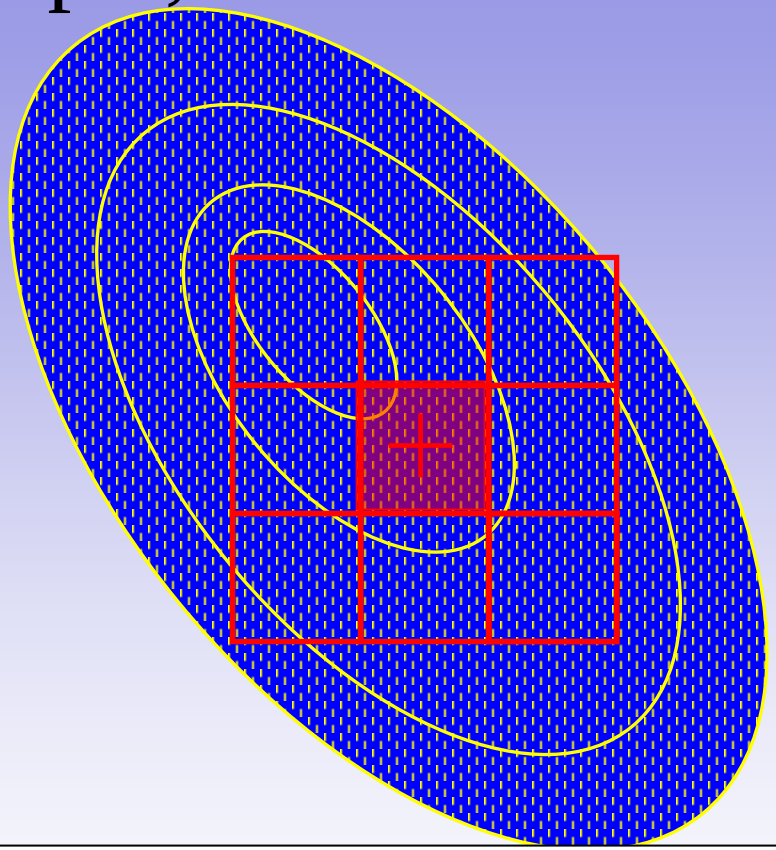

Probable: Remaining volume outside of the immediate area within the spill point

Classification Example, contd.

Other Scenarios:

- As additional wells are drilled, the acreage surrounding the initial well is reclassified to ***Proved-Developed***.
- After injection, it is found a single well cannot fill 640 acres, a portion of this acreage is reclassified as ***Proved-Undeveloped*** until infill wells are drilled or regulations allow closer well spacing.

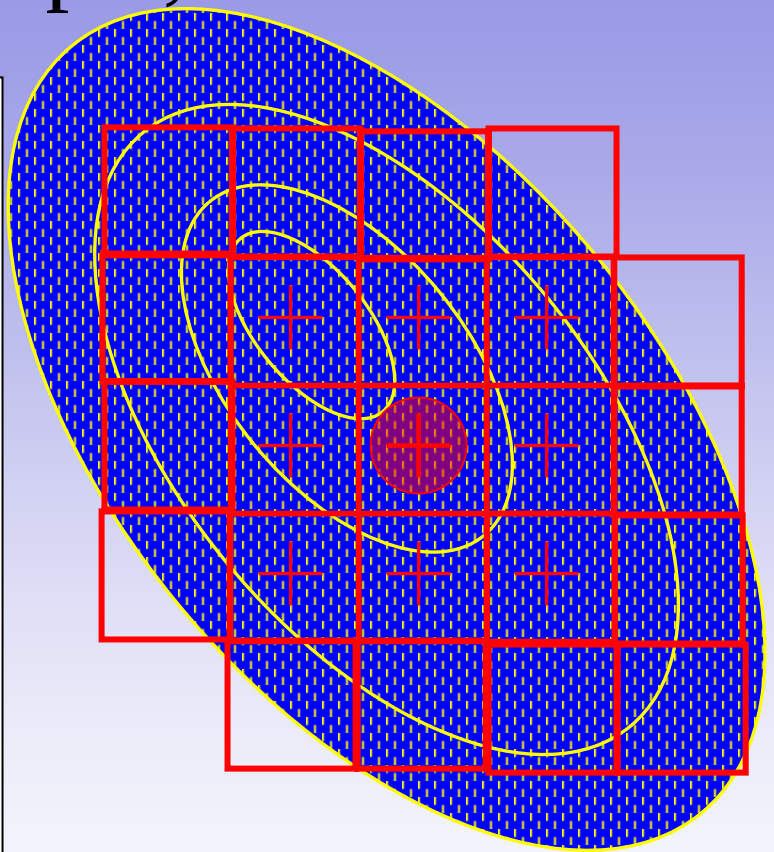

Conclusions

- Petroleum classifications have been historically used to divide in situ, gross petroleum volumes into likely producible reserves
- CO_2 storage classifications can provide the same benefit by allocating total pore volume or adsorptive capacity to storage capacity based on “most likely” test

Conclusions, contd.

- Current CO_2 sequestration assessments are ***unproved*** CO_2 storage resources
- Some portion of this resource remains to be developed as ***proved*** storage capacity as wells are drilled and tests results prove formations conducive to commercial CO_2 injection and storage volumes

Midwest Geological Sequestration Consortium
A DOE Regional Partnership
www.sequestration.org