# A Special Autoclave Apparatus for Measuring Coal/Gas Properties and Interactions at Elevated Temperatures and Pressures

James G. Blencoe, Chemical Sciences Division, Oak Ridge National Laboratory, P.O. Box 2008, Building 4500-S, Oak Ridge, TN 37831-6110, USA
Phone: (865) 574-7041. Fax: (865) 574-4961. E-mail: blencoejg@ornl.gov.

Michael T. Naney, Chemical Sciences Division, Oak Ridge National Laboratory, P.O. Box 2008, Building 4500-S, Oak Ridge, TN 37831-6110, USA
Phone: (865) 576-2749. Fax: (865) 574-4961. E-mail: naneymt@ornl.gov.

Lawrence M. Anovitz, Chemical Sciences Division, Oak Ridge National Laboratory, P.O. Box 2008, Building 4500-S, Oak Ridge, TN 37831-6110, USA
Phone: (865) 574-5034. Fax: (865) 574-4961. E-mail: anovitzlm@ornl.gov.

## Abstract

A custom-designed, 1.2-liter internal volume, autoclave apparatus is being used to determine the densities and viscosities of mixed $CO_2$-$CH_4$-$N_2$ gases at 30-70°C, 1-200 bars—and to measure coal expansion and contraction as gas species adsorb onto, and desorb from, coal surfaces. Gas densities and viscosities are quantified precisely and accurately by: (1) transferring known masses of pure gas into the volume-calibrated autoclave at a fixed temperature, (2) inverting the autoclave repeatedly to induce mechanical mixing of the gas via gravity settling of a glass-tube-housed steel ball and two perforated steel disks, (3) recording temperature and pressure after complete gas homogenization has been achieved, and (4) repeatedly measuring the rate at which the steel ball rolls down the glass tube after the autoclave is alternately rotated clockwise and counterclockwise from a horizontal position to shallow angles of equal magnitude but opposite sign. Rates and magnitudes of coal swelling and shrinkage are measured in separate experiments using miniature strain gauges attached to the surfaces of coherent fragments of coal.

## Background

Evidence is mounting that rising levels of atmospheric $CO_2$, caused primarily by combustion of fossil fuels, will lead to rapid global warming. To address this problem, numerous nations are developing plans for lowering $CO_2$ emissions to the atmosphere. The principal approaches under consideration are: improving energy efficiency; making greater use of alternative sources of energy; and creating economically viable technologies for capture, separation, and long-term storage of $CO_2$. The latter strategy, which keeps large masses of $CO_2$ separate from the Earth's atmosphere for hundreds to thousands of years (a concept commonly known as "$CO_2$ sequestration"), is receiving increasing attention because it permits continued use of high-carbon fossil fuels to generate electrical power while ensuring that $CO_2$ releases to the atmosphere are reduced.

A potentially attractive means for terrestrial $CO_2$ sequestration is injection of gaseous $CO_2$ into underground reservoirs. The primary candidate sites are active or depleted oil and gas fields, deep brine formations, and unmineable, underground coalbeds. To date, studies to determine the feasibility of geologic $CO_2$ sequestration have focused on oil and gas fields, and deep brine formations. However, four characteristics of deep, unmineable coalbeds make them extremely attractive for wide-scale $CO_2$ sequestration. (1) Like deep brine formations, unmineable subsurface coalseams are widely distributed across the U.S. (2) When $CO_2$ is injected into a coalbed, it efficiently displaces adsorbed methane (Figure 1). Therefore, $CO_2$ sequestration and coalbed methane (CBM) production are synergistic technologies, the additional natural gas produced by $CO_2$ sequestration serving to offset the costs of $CO_2$ injection. (3) $CO_2$ is twice as adsorbing on coal as $CH_4$, and remains tightly bound to coal surfaces after $CH_4$ is displaced. Therefore, after being injected into an underground coalbed, there is little risk that sequestered $CO_2$ will leak to overlying strata, or to the surface. This is an enormous advantage over $CO_2$ storage in deep saline formations, where escape of gas through caprock is a serious problem. (4) Many unmineable coalseams are located near coal-fired power plants, which are large point sources of $CO_2$. Thus, minimal pipeline transport of $CO_2$ would be required to deliver it to a suitable site for subsurface injection. In contrast, oil and gas fields, and particularly deep saline formations, are often far removed from fossil fuel-fired power plants.

CBM recovery, accomplished principally by pumping formation water out of a subterranean coalbed, is a mature technology. In contrast, $CO_2$-enhanced CBM recovery is a recent concept, which has been demonstrated only in pilot tests. Consequently, opportunities abound in fundamental and applied research aimed toward advancing this rapidly emerging technology.

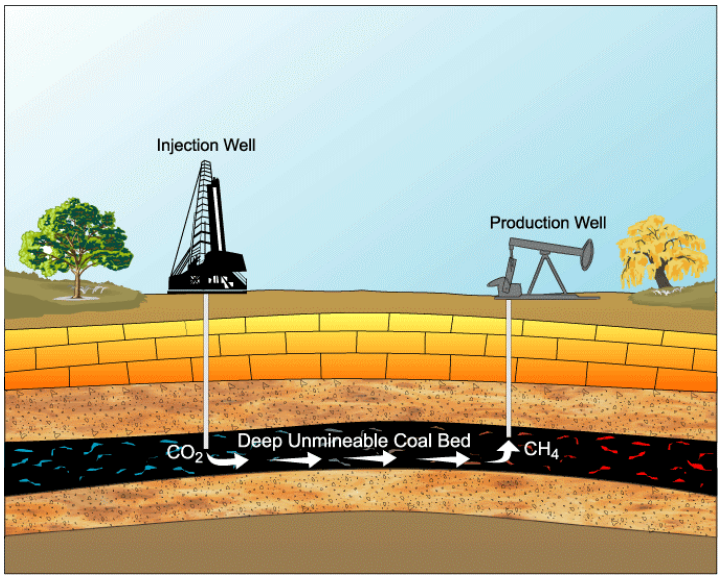


Figure 1. A schematic diagram of $CO_2$-enhanced coalbed methane (CBM) production.

## Purpose

The central purpose of the research is to acquire critically important technical information for assessing the feasibility of sequestering $CO_2$ in deep unmineable coalbeds. This carbon management technology is currently in its embryonic stages; therefore, vigorous fundamental and applied research programs are needed to fill major knowledge gaps. A particularly important line of scientific inquiry arises from the observations that underground coalbeds are often rich in methane ($CH_4$), and that $CO_2$ injected into those formations will adsorb on coal surfaces, causing $CH_4$ to desorb. Thus, it has been proposed that $CO_2$ sequestration can be combined with coalbed methane recovery operations to enhance natural gas production. Brought to full fruition, this synergistic coupling could greatly reduce the costs of $CO_2$ sequestration. However, to enable reliable numerical modeling of $CO_2$-enhanced natural gas production, the effects of temperature and $CO_2$(±nitrogen, $N_2$)-$CH_4$ mixing on gas pressures, gas viscosities, gas sorption-desorption reactions, and gas sorption/desorption-induced coal swelling and shrinkage, must be known quantitatively. These effects cannot be predicted accurately by modern methods of process modeling and simulation; consequently, experiments must be performed to obtain the required information. Accordingly, this project is focused on data analysis and equation development designed to quantitatively characterize the effects of temperature and $CO_2$-$CH_4$ mixing on coal/gas interactions that influence the efficiency and cost-effectiveness of sequestering $CO_2$ in $CH_4$-rich underground coalseams.

## Approach

The equilibrium densities and viscosities of $CO_2$-$CH_4$ mixtures will be determined experimentally at 30-70°C, 10-200 bars, using a custom-designed autoclave apparatus with a 1.2 liter internal volume (Figure 2). The following procedure will be applied to make the measurements: (1) The autoclave is heated to a predetermined temperature in an infrared, forced-air convection oven (Figure 3), then evacuated to a pressure <10 torr with a vacuum pump; (2) The autoclave is then filled with pure $CH_4$ to a predetermined pressure, and a precalculated mass of (denser) $CO_2$ injected into the upper section of the autoclave. The $CO_2$ will sink toward the bottom of the vessel, mixing with $CH_4$ as it descends. (3) After the partially mixed gas has settled to the bottom of the vessel, the autoclave is inverted to induce gravity settling of any remaining, unmixed $CO_2$. (4) Step 3 is repeated until complete gas mixing is achieved. Rates of $CO_2$-$CH_4$ mixing will be monitored by continuously recording changes in pressure. Because mixed $CO_2$-$CH_4$ gases have large positive excess molar volumes at *P-T* conditions near the critical point of $CO_2$, mingling of the two species is reflected by increases in gas pressure. When a plateau value is reached, complete homogenization of the mixed gas is indicated. (5) After the gas mixture has been

completely homogenized: (i) a final pressure reading is taken to determine the equilibrium density of the gas, and (ii) a viscosity measurement is made using a rolling-ball apparatus. Densities and viscosities measured in this way for wide ranges of temperature, gas pressure, and gas composition can be used to develop mathematical expressions for predicting the fluctuations in gas pressure and viscosity that will occur when $CO_2$ mixes with $CH_4$—either during mixed-gas/coal adsorption-desorption experiments, or in field tests when $CO_2$ is injected into a methane-saturated subsurface coalbed.

Figure 2. Photograph of the rocking autoclave.

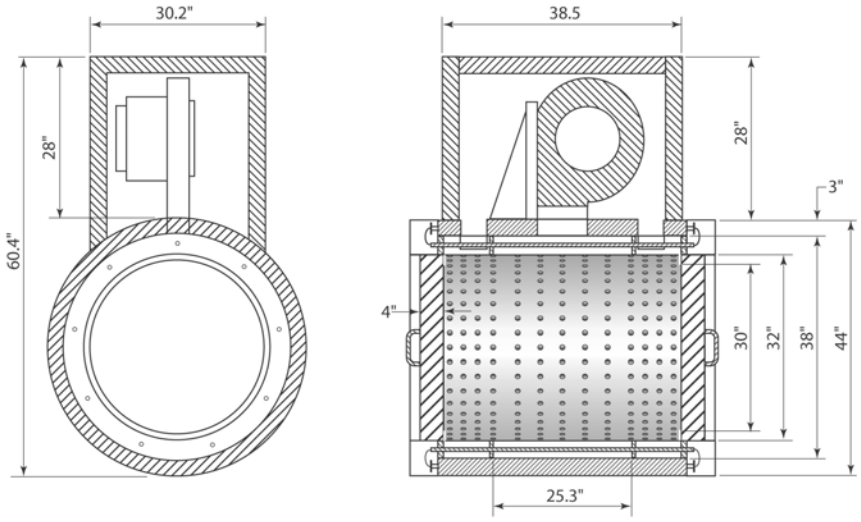


Figure 3. Front and side engineering drawings of the infrared, forced-air convection oven that was built to heat the rocking autoclave to temperatures as high as 100ºC.

## Status of the Project

Construction of the special autoclave facility is nearly complete, and data collection is scheduled to start in late June, 2003. Initial experiments will be performed at closely spaced temperature intervals between 30 and 40°C, and at a series of pressures between 10 and 200 bars for numerous intermediate gas compositions, to determine the effects of temperature and total gas pressure on the volumetric properties and viscosities of $CO_2$-$CH_4$ gases. The array of data produced by the experiments will indicate the changes in formation pressure and gas viscosity that will occur when $CO_2$ is injected into a $CH_4$-saturated, subterranean coalbed. The results are likely to show that the *P-V-T* properties and viscosities of $CO_2$-$CH_4$ mixtures are highly dependent on proximity to the critical point of $CO_2$ (located at approximately 31°C and 74 bars). Due partly to the highly nonideal mixing of $CO_2$-$CH_4$ gases at 30-40°C, 50-100 bars, large increases in pressure and gas viscosity will occur as $CO_2$ mixes with $CH_4$. The magnitudes of these pressure increases and viscosity variations, as a function of temperature, total gas pressure, and gas composition—presently unknown—must be determined precisely and accurately to enable reliable numerical modeling of $CO_2$ sequestration in $CH_4$-rich underground coalbeds.

Research conducted for this project in out years will build on the results obtained in FYs 2003 and 2004. Experiments will be performed to quantify the equilibrium densities and viscosities of $CO_2$-$CH_4$ gases at 40-50ºC, 10-200 bars. In addition, the density data obtained in FYs 2003 and 2004 will be used to interpret the results of mixed-gas/coal adsorption-desorption experiments performed at other laboratories. The rates and extents of $CO_2$ adsorption on—and $CH_4$ desorption from—coal surfaces will depend on temperature, total gas pressure, coal rank and composition, and initial mixed-gas composition. The net effects of these variables cannot be predicted accurately before experiments are performed; however, it seems likely that results will indicate that gas adsorption/desorption varies systematically with the thermodynamic mixing properties of the gas from which $CO_2$ is being extracted, and into which $CH_4$ is being released. If so, it would then be possible to develop numerical expressions that relate the thermodynamic mixing properties of $CO_2$-$CH_4$ gases with the adsorption/desorption that occurs when mixed $CO_2$-$CH_4$ gas comes into contact with buried coal. This would be an exciting and highly significant outcome of our research, as numerical expressions of that kind are badly needed to further develop computer codes for predicting the nature and extent of $CO_2$ capture and retention during and after injection into an underground coalseam.

## Future Work

The research performed for this project will lead naturally to subsequent laboratory work aimed at elucidating the effects of injecting $CO_2$-$N_2$ mixtures into subsurface coalbeds. This future research

direction stems partly from ongoing efforts to gauge the feasibility of injecting processed (deoxygenated) flue gas, rather than pure $CO_2$, into deep-seated coal layers. Evaluations of this potential $CO_2$-sequestration technology are prompted by economics. It is expensive to separate $CO_2$ from flue gas prior to subsurface sequestration. It is much less expensive to strip oxygen from flue gas and inject the remaining gases (mostly $CO_2$ and $N_2$) directly into a coalseam. Significantly, it has already been demonstrated in field tests performed in the San Juan Basin (New Mexico/Colorado) that injecting pure $N_2$ into a coal layer can greatly enhance flow of $CH_4$ toward a production well. Therefore, the idea behind injecting mixed $CO_2$-$N_2$ gas into a coalseam is that four positive results would accrue: the $CO_2$ in the injectate would adsorb on coal surfaces, causing $CH_4$ to desorb; the $N_2$ in the injectate would lower the partial pressure of $CH_4$ in the coalseam, inducing additional release of $CH_4$; the $CO_2$ adsorbed on coal surfaces would remain tightly bound in the seam after injection ($CO_2$ sequestration); and finally, the three foregoing processes would—in combination—constitute a coupled $CO_2$ sequestration/CBM technology that is not only economically viable, but also highly effective in reducing $CO_2$ emissions to the Earth's atmosphere.

Clearly, to realize the great promise of $CO_2$+$N_2$-enhanced CBM recovery, it is necessary to develop a better understanding of $CO_2$-$CH_4$-$N_2$ gas mixing at *P-T* conditions achieved in subterranean coalbeds. This mingling will affect not only formation pressure and mixed-gas/coal adsorption-desorption reactions, but also coal expansion and contraction as gas species adsorb onto, and desorb from, coal surfaces. In this regard, it is noteworthy that our new autoclave facility is well-suited to measurements of coal swelling and shrinkage at temperatures and gas pressures representative of those found in deep, unmineable coalbeds. Therefore, a long-term goal of our research is to determine the effects of temperature, gas pressure, and $CO_2(\pm N_2)$-$CH_4$ mixing on the dimensionality of small, coherant fragments of coal. Coal expansion and contraction will be measured using miniature strain gauges mounted on the surfaces of coal samples. Whenever feasible, 2-3 strain gauges will be attached to a coal fragment in orientations that facilitate determination of expansion and contraction in directions parallel and perpendicular to original bedding. This will indicate the anisotropy in coal swelling/shrinkage that develops due partly to layering of organic and mineral matter in the sample.

## Acknowledgments

The research described in this paper is being sponsored by the Office of Fossil Energy, U.S. Department of Energy, National Energy Technology Laboratory, under contract number DE-AC05-00OR22725 with UT-Battelle, LLC.