Enchant Energy
City of Farmington

San Juan Generating Station Carbon Capture – Final FEED Report Presentation

FE0031843

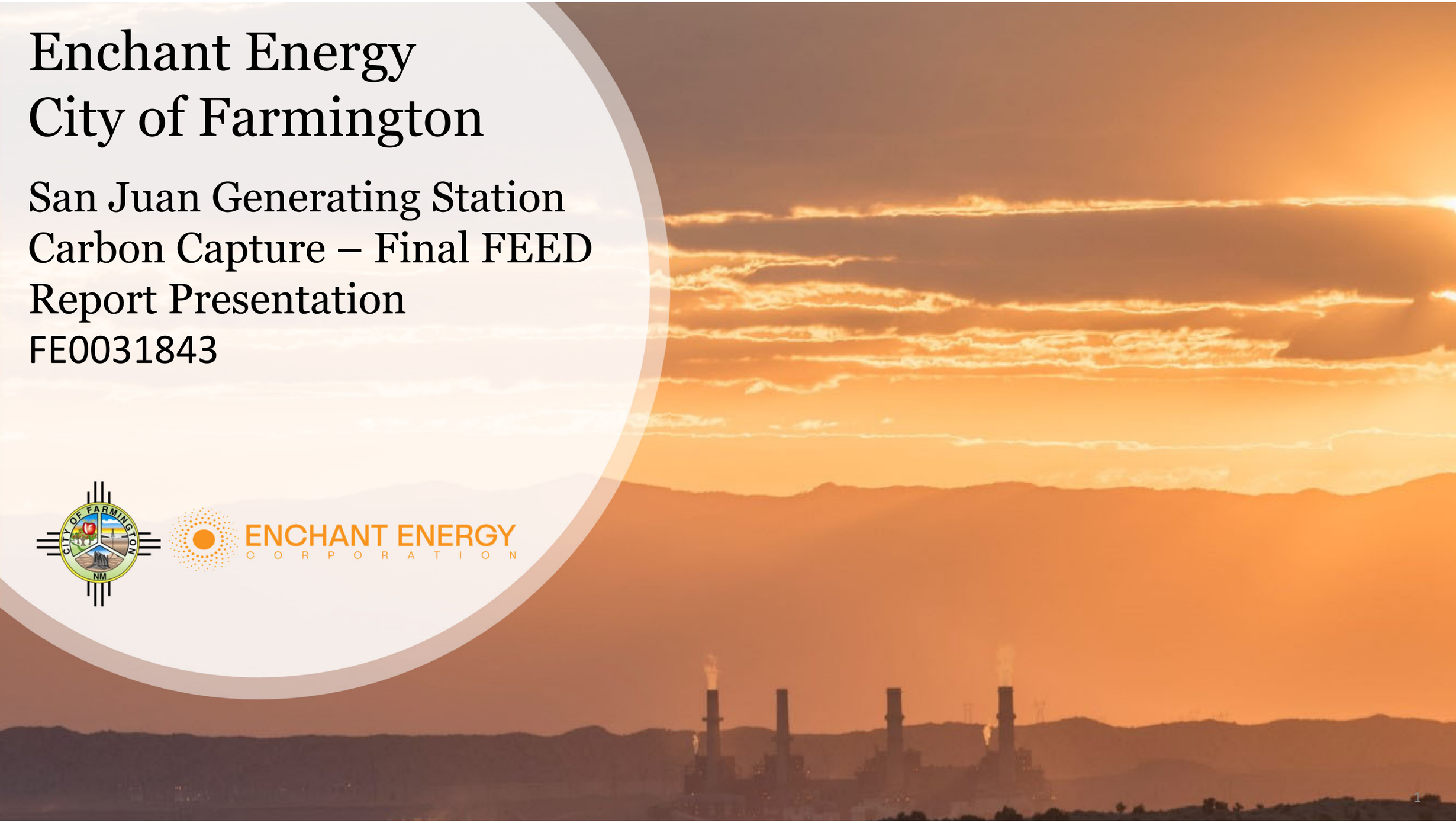

Team Introductions

- Enchant Energy, City of Farmington, Baker Tilly
- Mitsubishi Heavy Industries America (MHIA)
- Sargent & Lundy LLC (S&L)
- Kiewit Power Constructors

FEED Study Participants and Roles

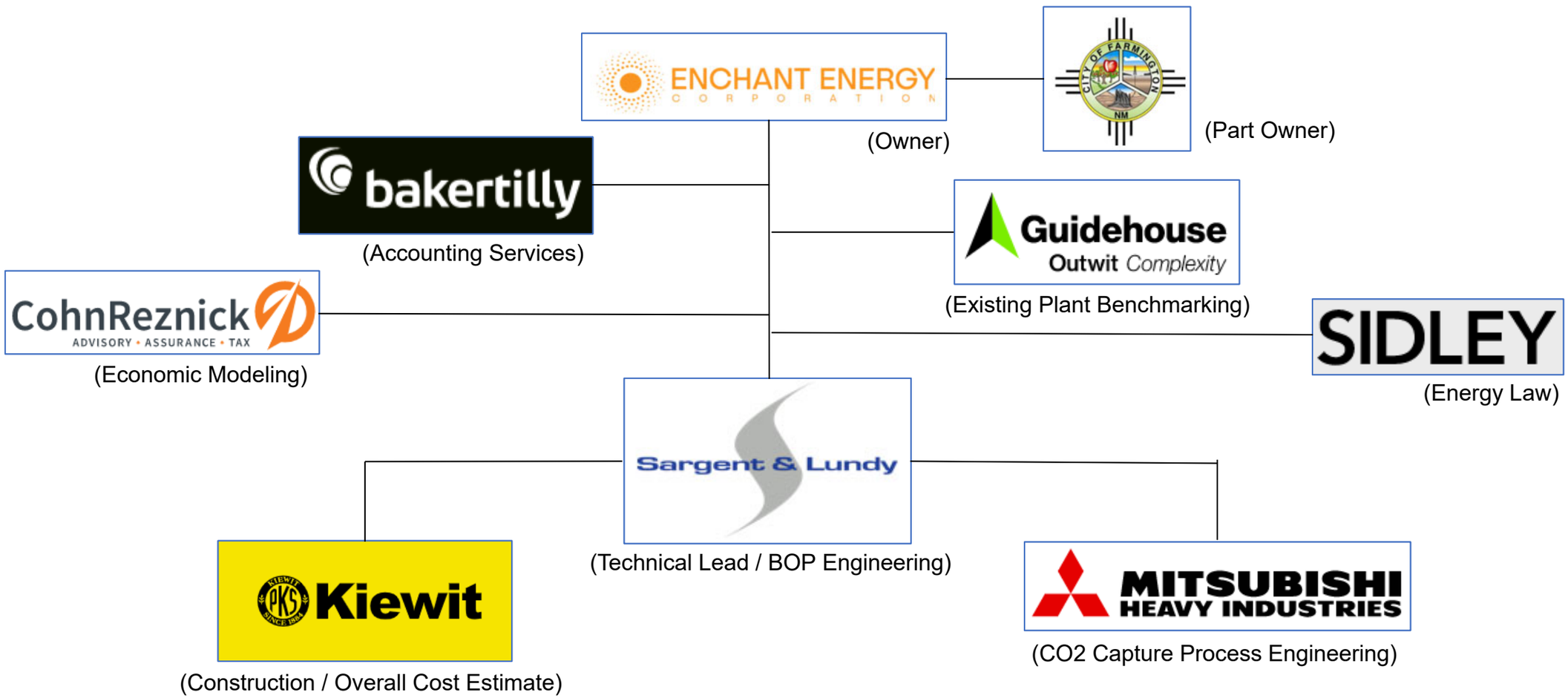

WHY San Juan Generating Station?

- **SCALE:** 914 MW Coal-fired Electricity Generation Station
- **SECURE FUEL SUPPLY:** adjacent San Juan mine, nearby Navajo mine
- **LOW EMISSIONS – ZERO Liquid Discharge:** NO_X/SO_2/Mercury/Particulates emissions, already mitigated
- **STORAGE Proximity:** Nearby CO_2 Pipeline with access to Permian Basin for EOR & located on San Juan Basin Geologic Formation
- **REGIONAL Access:** Heart of Southwestern transmission grid, with connections to rest of New Mexico, Arizona, California, Colorado, Nevada, and Utah

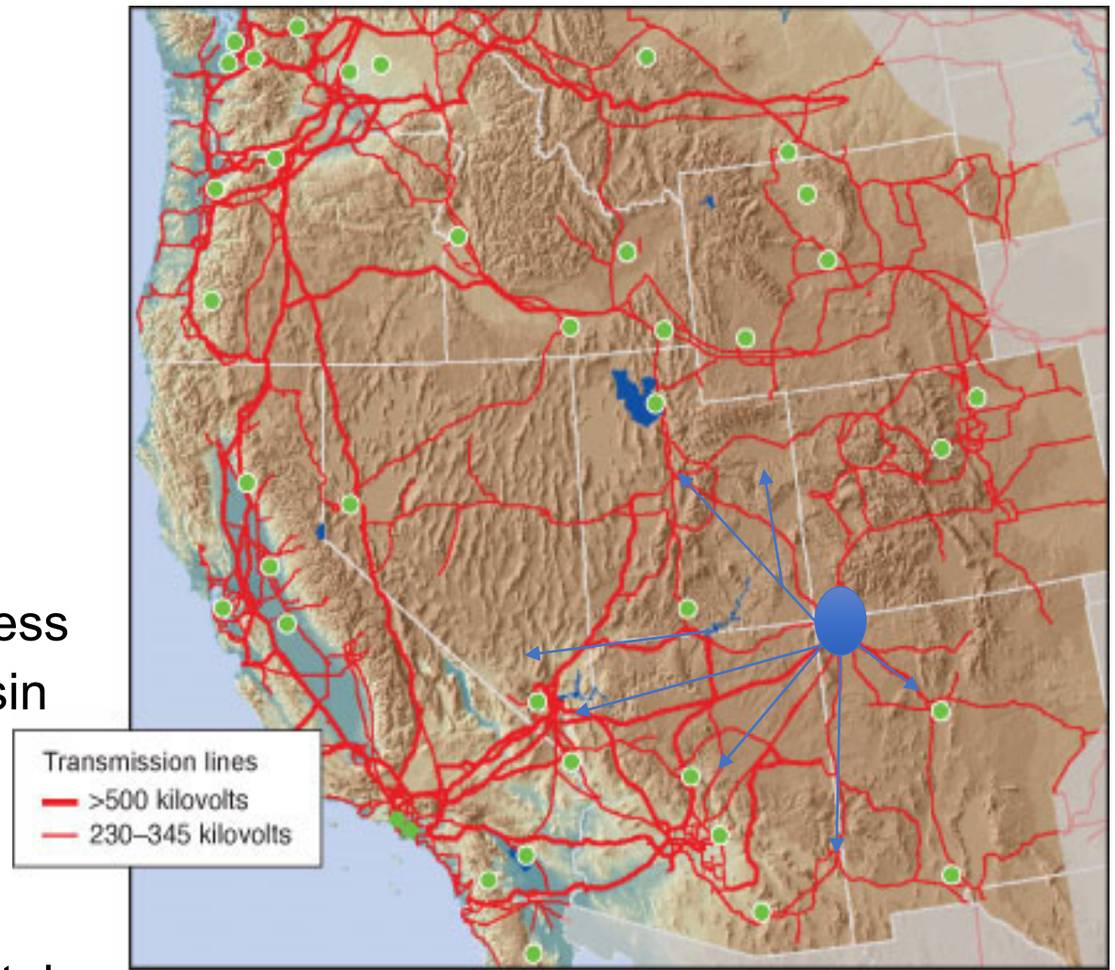

ENCHANT ENERGY CORPORATION

WHY San Juan Generating Station?

- San Juan Generating Station is located in close proximity to five Native American Tribes, the HOPI, the Navajo Nation, the Ute Mountain Ute, the Southern Ute and the Jicarilla Apache
- 2019 Censusreporter.org shows a population of 123,958, 38% Native American and 21% Hispanic. The Median household income was $44,321 and 21% of the population have incomes below the poverty line.
- **Decarbonizing San Juan:**
  - **Preserves:** **~1,500 direct and indirect jobs**, and more than **$53 million** in annual state and local tax revenues (from NM independent assessment)
  - **Assures:** a reliable, low emissions electricity source for the West – below 200 lbs/mwh CO_2 intensity
  - **Creates:** new construction jobs exceeding **2 million worker-hours**
  - **Adds:** additional tax base for the ~$1.6 billion Carbon Capture Island construction
  - **Maintains:** a middle class for tribal communities and provides for generational opportunities

ENCHANT ENERGY CORPORATION

SJGS Carbon Capture Project Schematic

San Juan Coal Mine/ Westmoreland

Coal

San Juan Generating Station (SJGS) 847 MW Power Plant

Flue Gas

Carbon Capture Island

McElmo Dome CO_2 Field, Cortez CO

Kinder Morgan Cortez CO_2 Pipeline

Electricity

Transmission of electricity under PPAs to customers in Western U.S.

CO_2

New 21-mile connector CO_2 Pipeline

New 8 to 10 EPA new Class VI CO_2 Injection Wells & 3 new monitoring wells

- ~365MW $_{equivalent}$ of power and of steam to be used by Carbon Capture Island
- Flue gas transferred from SJGS to Carbon Capture Island of ~6 million metric tonnes per year captured, compressed, and transported
- NM Tech & Enchant awarded $19 million DOE award (including cost share) to drill and characterize CO_2 sequestration in New Mexico Class VI injection wells
- Cortez carbon dioxide pipeline to NM/Texas Permian Basin for Enhanced Oil Recovery (EOR) as backup plan

Existing EPA-approved permanent CO_2 storage sites in EOR fields in the Permian Basin.

ENCHANT ENERGY CORPORATION

Project Objective & Overview

Project Objective

Conduct a Front-End Engineering and Design (FEED) Study for retrofitting two coal-fired generating units (914 MW) at San Juan Generating Station (SJGS) with Mitsubishi Heavy Industries America (MHIA) KM CDR Process™ for Carbon Capture Utilization and Storage (CCUS). The SJGS facility, located in Waterflow, New Mexico, has been identified as a prime candidate for retrofitting CCUS technology due to site-specific factors that have the potential to make the Project attractive from a technical, economic, and financing perspective.

Project Overview

The Carbon Capture Project consists of following scope items:

- Installation of new infrastructure (e.g., ductwork) needed to tie the existing boilers into the carbon capture system.
- Installation of the carbon capture equipment on SJGS property located directly adjacent to the existing generating units (SJGS Units 1 & 4).
- Installation of a new cooling tower to provide heat rejection for the carbon capture system.

FEED Study DOR

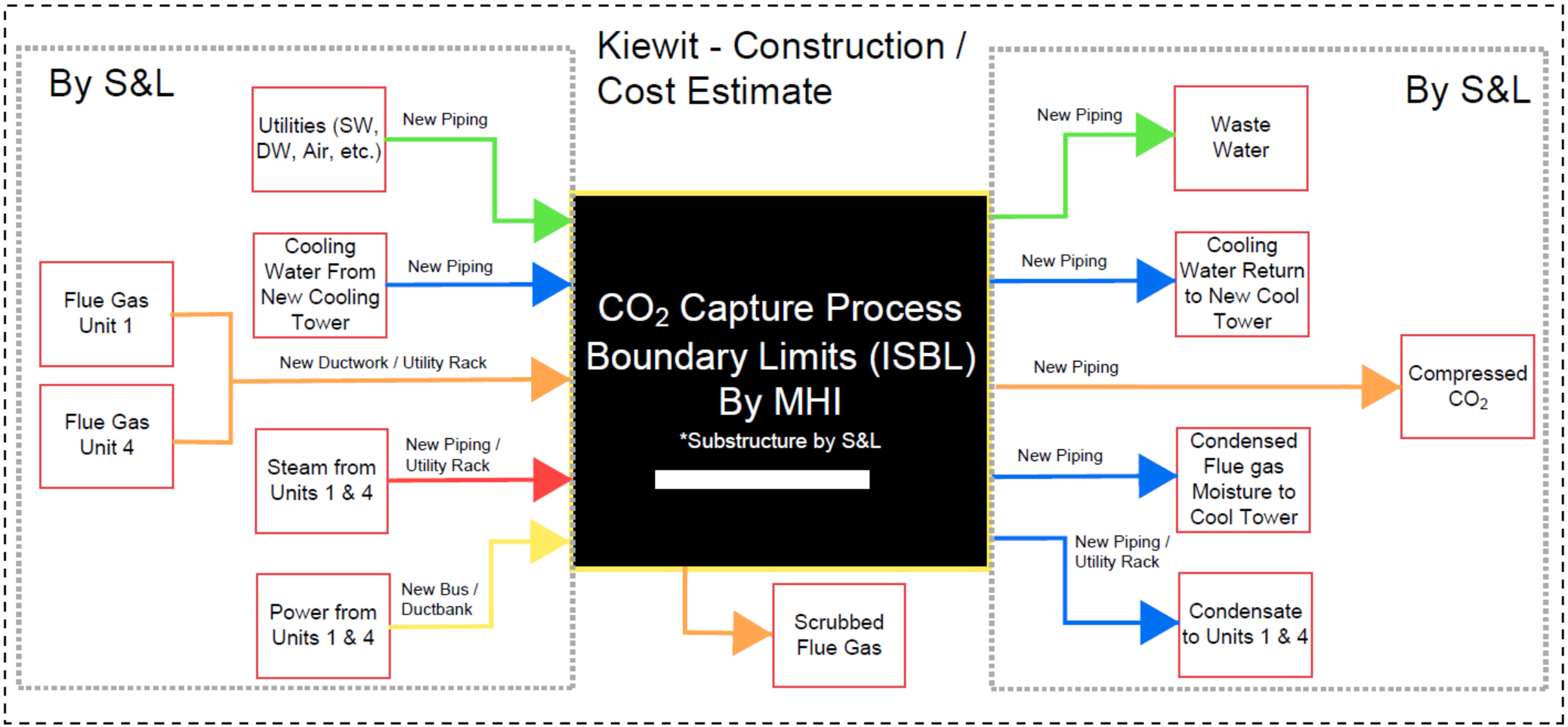

Project Design Basis

- Site Conditions – Latest ASHRAE weather data from Four Corner Regional Airport
  - 12.004 psia standard pressure
  - Equipment design based on 50-yr extreme temps
  - Heating / Cooling data based on 0.4% occurrence
- Civil/Structural criteria: Wind, Seismic, Snow, Rain
  - International Building Code (IBC) – 2015
  - New Mexico Commercial Building Code – 2015
  - American Society of Civil Engineers (ASCE) 7-10
- National Fire Protection Association (NFPA)
- Occupational Safety & Health Administration (OSHA) 29 CFR 1910
- Noise – near field of 85 dBA; far field not required
- Design margins – S&L & MHI standards
- Existing SJGS standards
- Equipment redundancy of critical single points of failure (e.g. flue gas fans)
  - Increase reliability & availability

Flue Gas Composition Design Basis

- S&L prepared the Flue Gas Design Basis, which established the design inlet conditions to MHI's CO_2 capture system: temperature, pressure, flowrate & composition
  - Reviewed future coal seam projections for heating value and composition
  - Analyzed PI Data from 2019 for composition
    - Additional trace composition analysis developed via stack testing
  - Adjusted heat input for expected annual average heat rate + 5% to maximize utilization of CCS sizing
    - Partial vent of flue gas at maximum conditions
  - Established design basis for full load and low load cases for Unit 1 and 4 boiler capacities
    - Full Load: U1 = 370 MWn, U4 = 507 MWn
    - Low Load: U1 = 177 MWn, U4 = 220 MWn

CO_2 Island Inlet Conditions - Based on Design Conditions (Full Load Design - Combined Ductwork)			
Parameter	Units	Conditions with Minimal Temp Loss	Conditions with Moderate Temp Loss
Temperature	°F	127	110
Pressure[6]	in w.c.	-6	-6
Flue Gas Flowrate	scfm[2]	2,846,302	2,590,920
	lb/hr	12,458,089	11,662,124
N_2	vol-%	66.92	72.06
O_2	vol-%	5.98	6.18
H_2O	vol-%	17.16	10.83
CO_2	vol-%	9.93	10.91
SO_2	ppmv	18	20
SO_3	ppmv	1.2	1.3
NOx	ppmv	106	117
NH_3	ppmvd	3.4	3.4 [3]
Hg	µg/dscf	0.08	
PM	mg/dscf	0.139	

ENCHANT ENERGY CORPORATION

Executive Summary – FEED Study Funding Status

Large-Scale Commercial Carbon Capture Retrofit of the San Juan Generating Station

DE-FE0031843

Funding (DOE and Cost Share) Through 08/31/2022

Funding	DOE	Cost Share	Total
Authorized	$7,525,533	$1,881,572	$9,407,105
Expenditures	$7,455,434	$1,864,046	$9,319,480
Remaining	$70,099	$17,526	$87,625

Overall Project Performance Dates

10/15/2019 – 09/30/2022

Executive Summary – FEED Study Milestones

Task/ Subtask	Milestone Title/Description	Completion Date
1.0	Kickoff Meeting	5/22/2020
1.0	Updated Project Management Plan	6/27/2021
2.1	Design Basis Finalized	7/16/2020
2.3	Four Factor Analysis to NMED	9/1/2020
2.3	Preliminary Constructability Review	9/10/2020
2.3	Final Constructability Review	8/25/2021
2.3	HAZOP Review Completed	11/12/2021
2.1	Process Island Design Completion	3/28/2022
2.2	Balance of Plant Engineering Completion	3/31/2022
2.3	Studies and Investigations Completion	6/29/2022
2.4	Cost Estimating Completion	5/26/2022
3.0	FEED Study Package	6/30/2022
1.0	Final Report	Planned for 9/30/2022

ENCHANT ENERGY CORPORATION

Executive Summary – FEED Study Tasks

- Task 1.0 – Project Management and Planning - **Pending Completion and Submission of Final Report**
- Task 2.0 – Front-End Engineering & Design Study – **Complete**
- Subtask 2.1 – Process Engineering and Design - **Complete**
- Subtask 2.2 – Balance of Plant Engineering – **Complete**
- Subtask 2.3 – Studies and Investigations - **Complete**
- Subtask 2.4 – Cost Estimating - **Complete**
- Task 3.0 – Final FEED Study Package - **Pending Completion and Submission of Final Report by 9/30/22**

Executive Summary – Success Criteria

Decision Point	Success Criteria	Final FEED Results
Permitting Agency Concurrence	Permitting and Regulatory Analysis Complete. NMED concurrence of proposed Project modifications and path forward.	NMED agree that only a permit modification for SJGS is needed for addition of Carbon Capture. PSD applicability has been performed and only VOC's are triggering PSD, therefore a VOC BACT analysis will be submitted in September.
Balance of Plant Design Integration	Design of balance of plant integration confirms site-specific advantage of reusing existing infrastructure from two retired Units 2 & 3.	BOP design has been completed and incorporates all reuse ability of existing infrastructure from the two retired units. It was determined that the unit 3 cooling tower was cost prohibitive for reuse and therefore the BOP design includes a new cooling tower for the carbon capture.
Project Execution Schedule	Development of schedule based on equipment lead times and engineering completed to date resulting in start of construction by no later than July 1, 2022.	Execution schedule is fully inclusive of significant long-lead supply chain challenges in the market globally. These supply chain issues are beyond what was expected at the on start of the project and will impact the start of construction, in addition to permitting schedules.
Calculation of Cost of Capture	Project capital and O&M costs result in cost of capture less than other reported large-scale CC projects and justifies Project financing based on total expected CO_2 sales.	O&M costs are lower than the Feasibility projections prior to the FEED as a result of the enhanced design. Enhanced Section 45Q tax credits passed through the Inflation Reduction Act justify the required Project financing based on total expected CO2 sequestration.
FEED Study Package	Submission of a FEED Study Package that includes a build cost analysis with a +/- 15% cost estimate.	FEED Study package capital costs includes inflationary impacts through May 30, 2022 and assumes ongoing inflation during the execution schedule and is based on vendor pricing estimates resulting in a +/- 15% cost estimate. Although this estimate is greater than the Project's Feasibility estimate, the enhanced Section 45Q ensures the Project's economic and finance viability.

ENCHANT ENERGY CORPORATION

Executive Summary of Results

- Full flow Carbon Capture for 914 MWg SJGS Units 1 & 4
- MHI KM CDR Process™ – 2 trains; KS-1™ solvent
- Steam from existing Unit 1 & 4 steam turbine IP/LP crossover
- Power from existing Unit 1 & 4 generators
- New cooling tower
- CO_2 transport to Kinder Morgan CO_2 pipeline and sequestration wells
- New Control / Electrical Building
- EPC execution strategy
- Execution schedule – Q4 of 2022 to Q3 of 2027
- Capital Cost - $1.55 billion
- Yearly O&M cost - $171 million
- Cost of Capture – $46.7 / tonne CO_2

ENCHANT ENERGY CORPORATION

Steam and Electric Sourcing

Steam Source

- Pre-feasibility study determined to use steam from operating Units (1 & 4)
- Alternate options, such as new gas turbines and/or auxiliary boilers, not considered
- Avoids additional emission sources requiring treatment
- Avoids large capital and O&M investment
- Maximum net power output not a driving factor
- Typical source for carbon capture → Steam turbine IP/LP crossover
  - Best matches conditions needed
- New heat balances developed at several unit loads – 100%, 75%, 50%, minimum
- Steam extraction from SJGS
  - Total power derate = 205MW total derate,
  - Average heat rate increase = 2,181 Btu/kWh
- Crossover steam conditions reduce as unit load is reduced. Limit for each Unit:
  - Unit 1 ~ 50% load
  - Unit 4 ~ 40% load
- Steam Turbine Modifications – In addition to IP/LP crossover, upgrades to internals are expected.
  - GE will be engaged in next phase to perform detailed studies

Steam and Electric Sourcing

Electric Power Source

- No new power source available (e.g. gas turbine) → Must use existing Unit 1 & 4
- Main power voltage level for carbon capture = 13.9 kV
- Power from Unit 1 and 4 steam turbine generators (STG) available at 22 kV
- New step-down transformers 22 kV / 13.9 kV, one per Unit 1 & 4
- Estimated total electrical load for carbon capture & new BOP = 159 MW

Water Supply and Wastewater Treatment

Water Supply

- Sourced from San Juan River, existing pump station to pump from river to on-site reservoir
- Primary makeup for new equipment – cooling tower (evaporation, drift, blowdown)
- Able to utilize moisture from flue gas & quencher blowdown to reduce makeup flow
- Establish 8 cycles of concentration in tower to maintain acceptable water quality
- SJGS annual average water usage at 85% capacity – 11,434 gpm (18,444 acre-ft/yr)

Wastewater Discharge

- SJGS is zero-liquid discharge – any untreatable water is evaporated in ponds
- Existing brine concentrators – capacity sufficient to treat additional waste @ annual avg.
- Maximum wastewater flow during summer – excess of 236 gpm must be treated by new system
  - High efficiency reverse osmosis (RO) system, concentrate sent to evaporation ponds
- New oily-water separator – effluent sent to cooling tower
- Triethylene glycol (TEG) waste – organic waste which can't be treated, send to evaporation ponds

Water Supply and Wastewater Treatment

Annual Average Water Balance

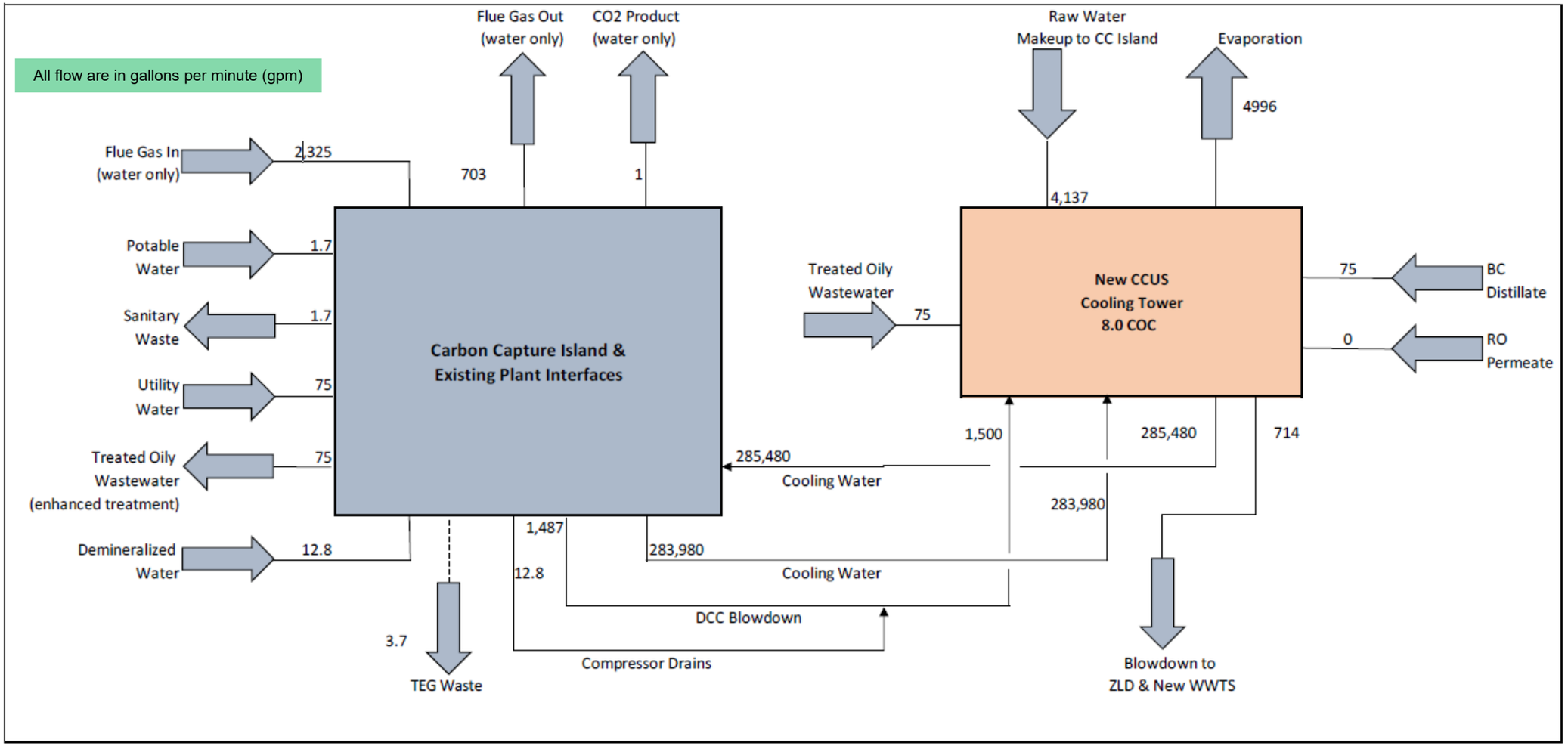

Cooling Water

- Studied 2 options:
  - (1) Re-use existing Unit 2 and 3 cooling tower facilities
  - (2) New cooling tower
- Establish design parameters
  - Cooling flow by MHI
  - Supply temp = 80˚F; Return temp = 98˚F (later updated to 106F)
  - Site maximum wet bulb temp. = 64.6˚F
  - Prevailing wind direction: East-West
- Unit 3 cooling tower

  (~40 yr. old tower, shutdown in 2017)

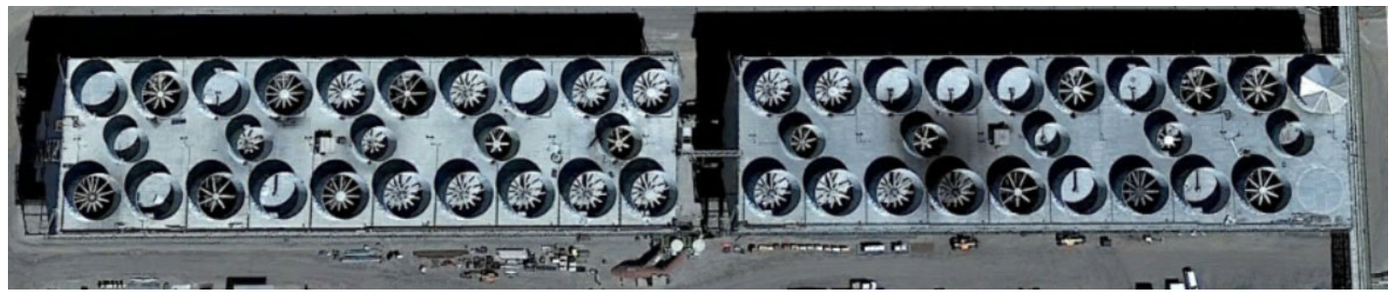

  - Water conservation tower, modified with several “Matrix” cells for improved performance
  - Theoretical maximum capacity could handle ~65% of CC heat rejection
  - Poor history of operation, freezing issues, pluggage, excessive leakage, asbestos insulation
  - Cost to refurbish for carbon capture project = ~$16M
  - Due to high efficiency film fill design, raw water treatment system required
    - Additional cost > $10M capital cost + future O&M $$

CITY OF FARMINGTON NM

ENCHANT ENERGY CORPORATION

Cooling Water

- Unit 2 cooling tower
  - Structure demolished after unit retirement
  - Foundation / collection basin remains intact
  - New tower required to provide balance of cooling
  - Cost of new tower ~$7.6M

- Additional considerations:
  - Keeping Unit 3 tower shifts CC island north – additional flue gas ductwork, pipe & utilities
  - Requires re-route of 345 kV transmission lines
  - Re-work & permitting of north evaporation ponds
  - Re-use of existing pumps, possible modifications to impellers for new conditions
  - Extensive piping from Unit 2 & tie-in with existing buried headers (40-yr old pipe)
  - Challenging operation of separate towers/pumps

Cooling Water

Conclusions

- New cooling tower, locate north of CC island
- Demolish Unit 3 cooling tower
- Shift CC island further south
- Reduced capital cost & maintenance

Environmental, Permitting and Regulatory Review

Major Environmental Permits, Approvals and Reviews

- Regional Haze Four-Factor Analysis
- National Environmental Policy Act (NEPA)
- Construction Air Permit
- Water and Solid Waste

Four Factor Analysis

- States required to update implementation plan to reduce haze (NOx and SOx emissions)
- Four factors
  - (1) Cost of Compliance
  - (2) Time to achieve compliance
  - (3) Energy and non-air quality environmental impact of compliance
  - (4) Remaining useful life of any existing source subject to such requirements
- SCR could be added for improved NOx control → Large investment, O&M costs; will not pursue at this time
- Additional WFGD upgrades not practical or necessary for improved SOx control

ENCHANT ENERGY CORPORATION

Environmental, Permitting and Regulatory Review

NEPA

- Bureau of Land Management (BLM) & Bureau of Indian Affairs (BIA) govern this approval
- Carbon capture and CO_2 pipeline considered connected projects
- BLM and BIA grant right of way (ROW) to construct pipeline across Federal and Tribal Lands
- CEQ regulations at 40 CFR Parts 1500-1508 provide NEPA implementation requirements.
- BLM NEPA implementation guidance provided in NEPA Handbook H-1790-1.
- BLM's NEPA review process starts with submittal of a Plan of Development (POD) – currently under development
- In general, the environmental review process under NEPA can involve three different levels of analysis:
  - Categorical Exclusion (CE)
  - Environmental Assessment (EA)
  - Environmental Impact Statement (EIS)

Environmental, Permitting and Regulatory Review

Air Permit

- CO_2 capture considered modification to existing major source of air pollutants
  - Confirmed with New Mexico Environmental Department (NMED)
- Expected emissions from CO_2 absorber stacks
  - 95% reduction in CO_2
  - 50% reduction in SO_2 and SO_3
  - No change in NOx, CO and PM
  - Minor increase in VOC and NH_3
- Air Quality Impact Modeling – visibility in federal Class I areas
- Project subject to New Mexico Administrative Code (NMAC) Part 74 Prevention of Significant Deterioration (PSD) permitting for VOCs
  - VOC BACT Analysis
- Project subject to NMAC Part 72 construction permitting for other regulated pollutants
- Requires modification of existing Title V Operating Permit

Environmental, Permitting and Regulatory Review

Water Rights and Wastewater Discharge

- Water sourced from San Juan river; shared water rights with 3 other Participants
- Based on expected average water usage after carbon capture addition, there will be sufficient water available. Assuming other Participants don't increase their need.
- SJGS is zero-liquid discharge, no wastewater sent off the property; evaporation ponds
  - NPDES permit not required

Stormwater and Spill Containment

- Storm water from new developed areas will tie into existing SJGS storm water system
- Develop new stormwater pollution prevention plan (SWPPP) and spill prevention control and countermeasures (SPCC) plan for carbon capture

Solid Waste

- Construction solid waste disposed on-site or off-site to properly permitted facilities
- CO_2 capture solid and sludge waste trucked off-site and sent to third party facilities

Control Study

- Existing Control Room:
  - Units 2 & 3 decommissioned in 2017
  - Unit 1 controls relocated to Unit 4 Control Room,
  - Old & outdated
  - Control systems mainly Foxboro DCS

- New Control Room:
  - Existing Plant DCS, New CC BOP DCS, & CC Plant DCS consolidated in New Control Room for centralized operator interface
  - New CCUS BOP DCS & CCUS Plant DCS to be same platform as existing Plant DCS (Foxboro)
  - CCUS Plant DCS to be independent from existing DCS (only hardwired interlocks)

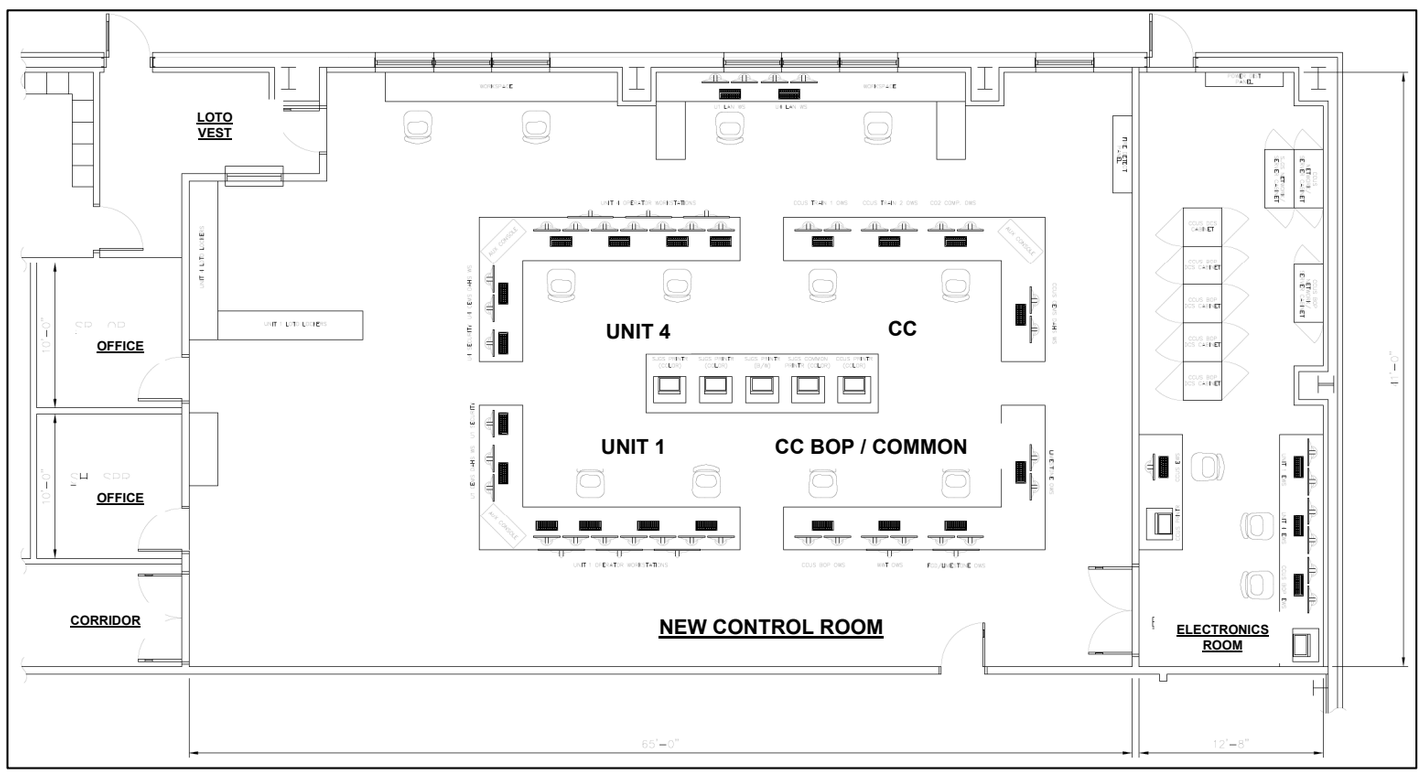

Control Study

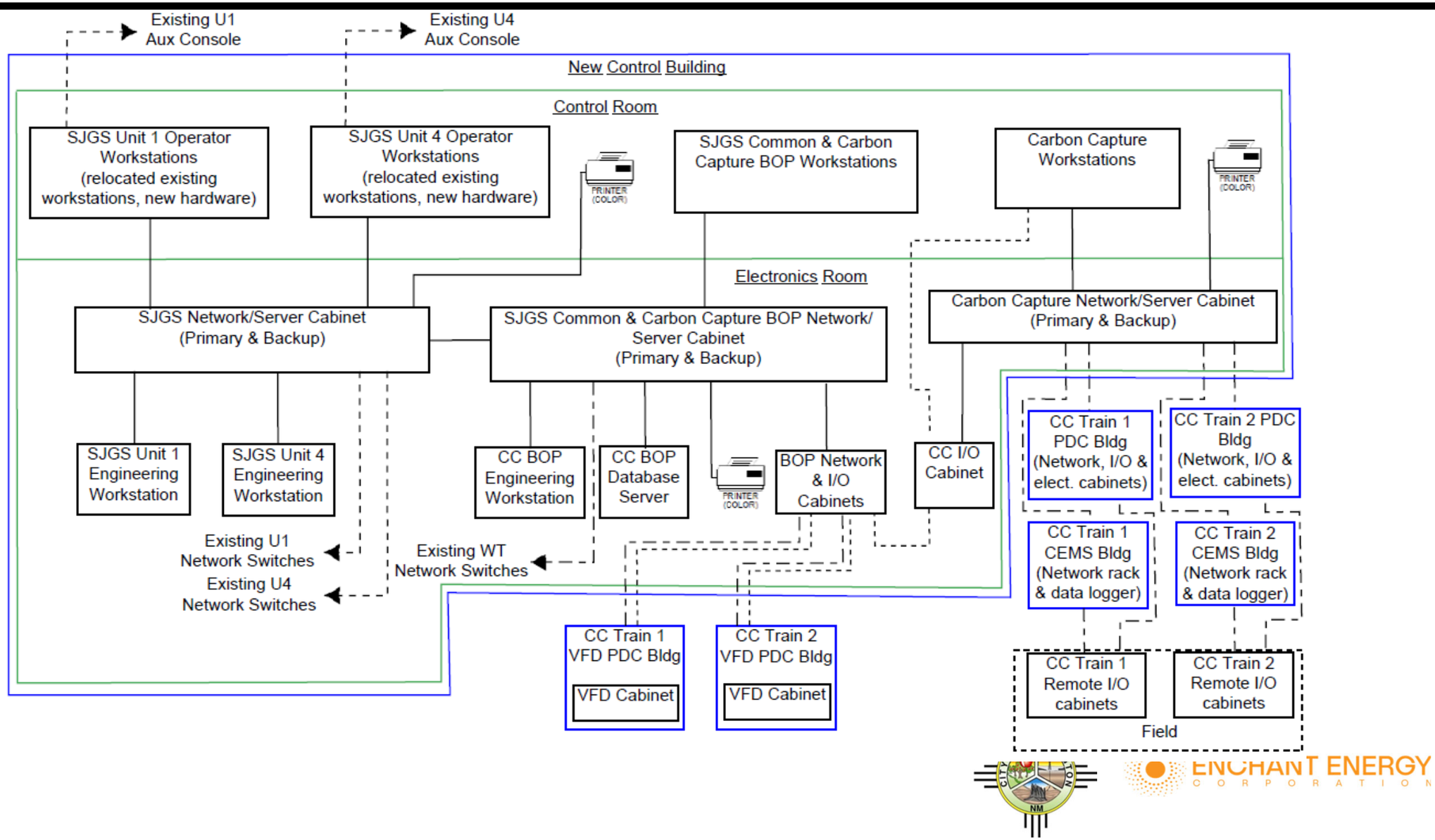

ENCHANT ENERGY CORPORATION

Compressor System Overpressure Relief

- CO_2 relief especially considers oxygen displacement to prevent suffocation when CO_2 is vented
- To prevent ground level accumulation, a common vent header is applied for CO_2 relief from all CO_2 piping and equipment
- The header is routed to the CO_2 Absorber (D-002) stack where the CO_2 mixes with treated flue gas and is discharged to atmosphere at safe elevation and velocity
- Evaluation of overpressure potential is based on API 520 and API 521 which considers thermal expansion, tube rupture, cooling water failure, fire (vapor or liquid), block out, and control valve (CV) failure
- Based on these seven causes, the worst case or maximum flow scenario is selected for relief equipment sizing
- Whenever possible, it is preferred to relieve pressure to another location inside the process as opposed to relieving to atmosphere or ground

Hazard and Operability (HAZOP) Review

An in-depth examination of the ISBL scope to identify and evaluate any process or equipment risks.

- 0 recommendations address “A” - Critical risk items
- 2 recommendations address “B” - Serious risk items
- 38 recommendations address “C” - Moderate risk items
- 5 recommendations address “D” - Minor risk items
- 1 recommendations address “E” - Negligible risk items
- 28 recommendations address “O” - Operating issue items

Hazard and Operability (HAZOP) Review

The two recommendations to address “serious” risk items were both associated with the highly unlikely scenario of tube failures in the regenerator reboiler or solvent reclaiming system. In either case, if undetected, the potential to contaminate the OSBL steam system was deemed a serious risk due to the downtime associated with cleaning out the contaminated areas. To avoid this situation, it was recommended to consider installing conductivity meters in the steam condensate return system that would prevent contaminated condensate from being returned to the OSBL steam system by an associated interlock.

Transportation Study

- A potential transportation route was surveyed in Oct 2021. The roll-off location that was analyzed was the port of Corpus Christi, TX.

- Present conditions limit the following three cargo dimensions (L x W x H) to be able to transport.

Item	Dimension
Equipment-A	40’L x 24’W x 17’H
Equipment-B	26’L x 18’W x 14’H
Equipment-C	48’L x 11’W x 12’H

- Process structures and pipe racks will be modularized to fit within the transportation limitations determined by the transportation study.

Transportation Study

- It is assumed that any obstructions along the route (i.e. signs, poles, trees, etc.) can be moved or adjusted without any issues.

- Prior to shipment of equipment a review of the routes will be performed to evaluate any changes that could have occurred to the route such as construction of roads or bridges or new low-hanging lines being strung. If such changes are identified, minor adjustments will be made to the route.

Constructability Review

- Mirrored arrangement for carbon capture trains
- Off-site modularization of pipe/utility racks
- On-site modularization of large vessels & ductwork
- Large cranes, open crane paths and field fabrication areas reserved for efficient construction
- Craft parking, traffic, trailer complex, laydown areas and access points all investigated

Constructability Review

- A “mirrored” arrangement was selected to allow the construction site to be grouped into smaller unitized areas.
- Mirrored arrangement limits movement of heavy lift crane.
- Modularization reduces costs and shortens the overall build schedule.

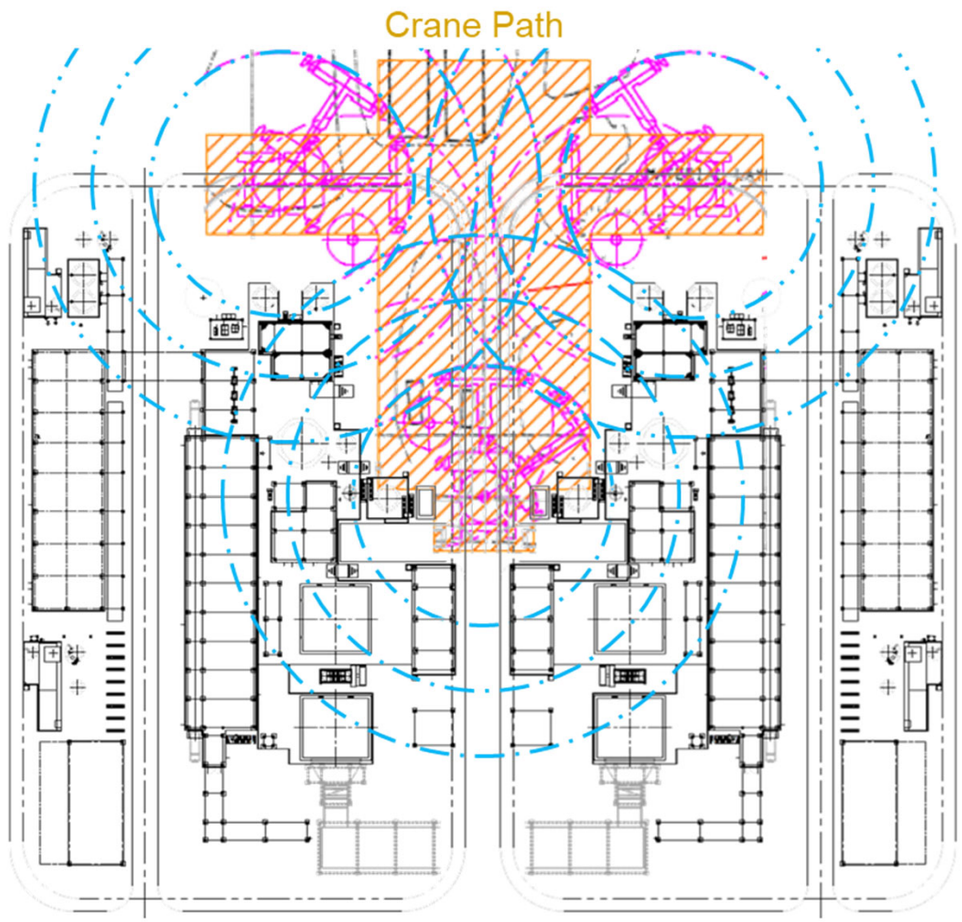

Constructability Review –North site area

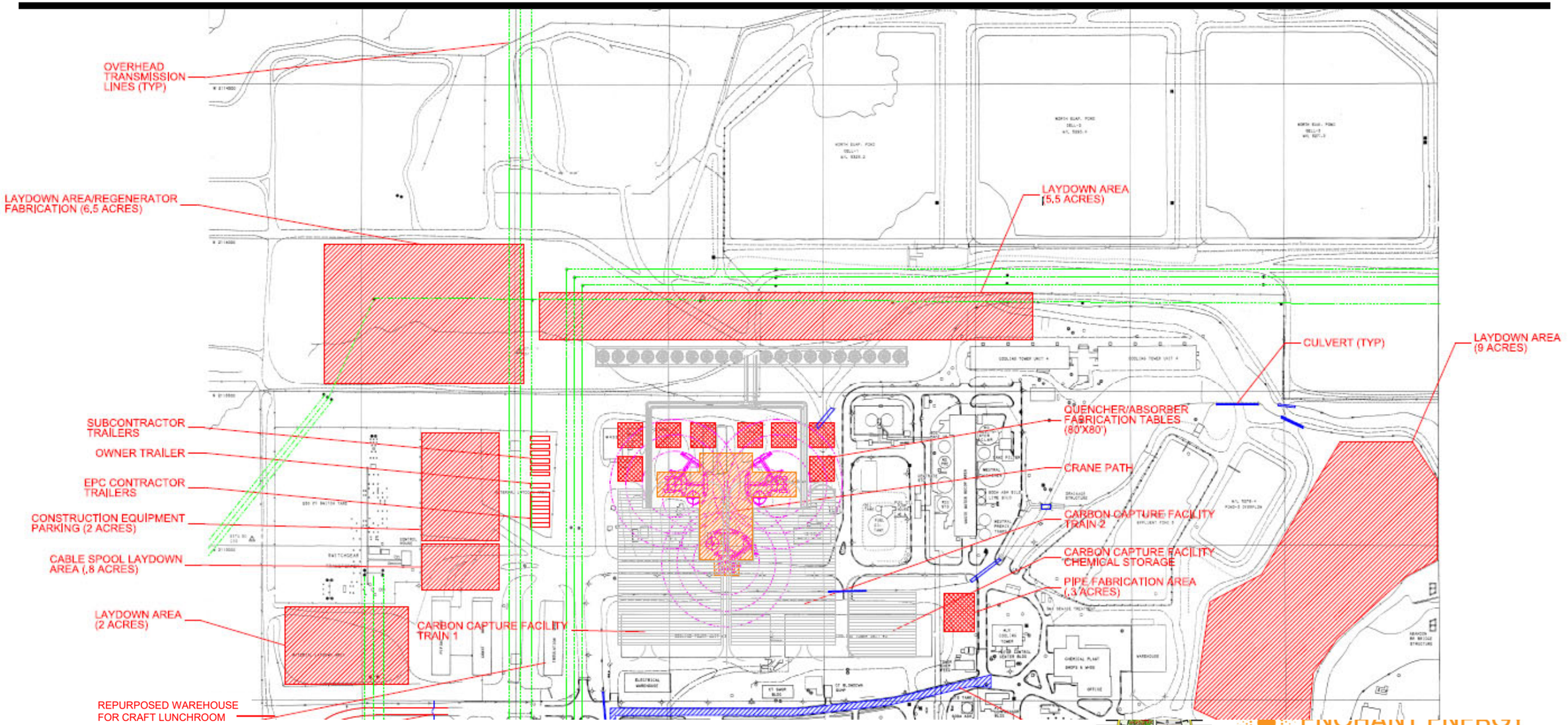

Constructability Review – South site area

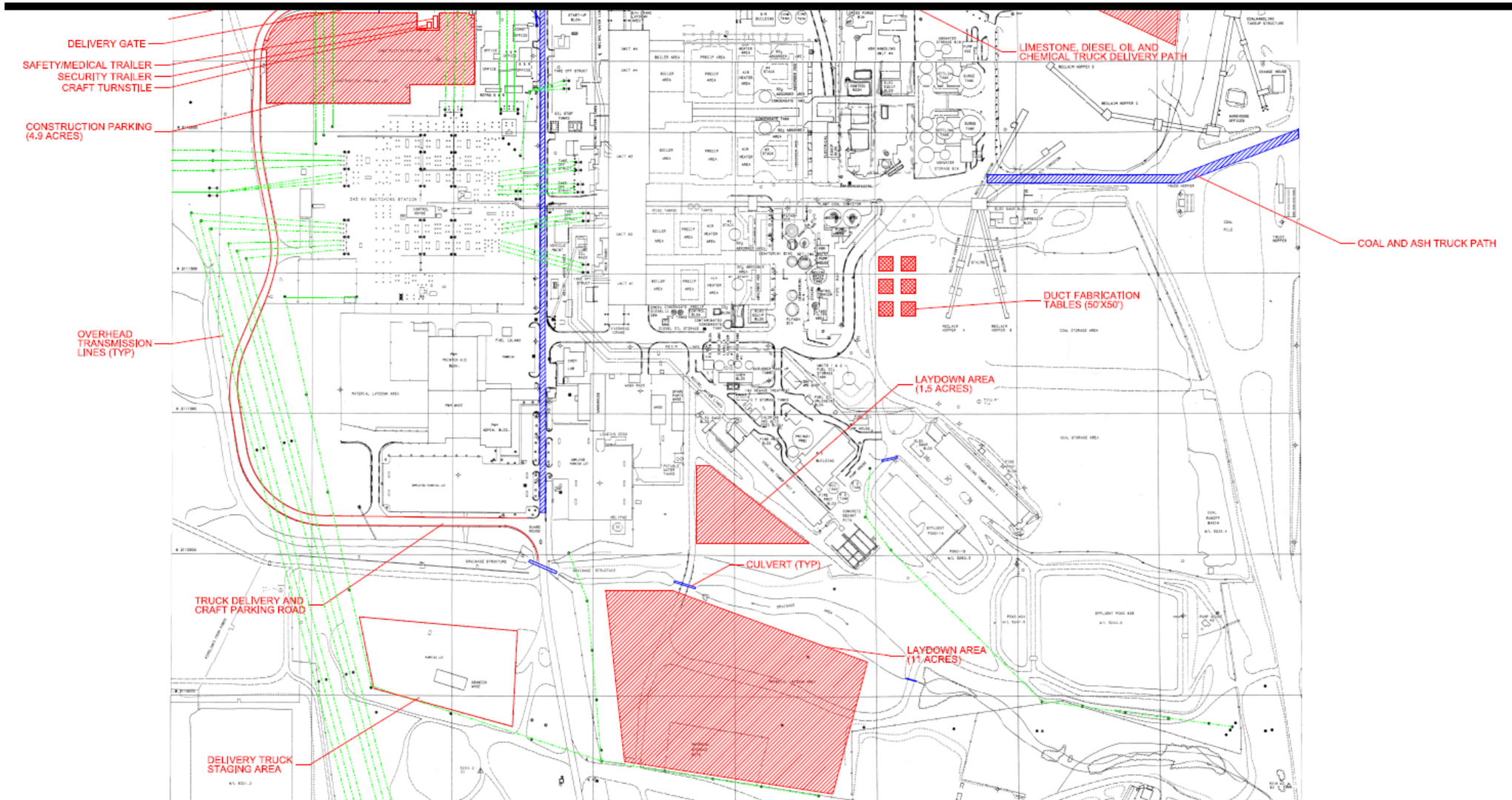

ENCHANT ENERGY CORPORATION

Contracting Strategy, Purchasing & Logistics

- Complete transfer of SJGS Ownership from PNM → Enchant / City of Farmington
- Enchant to operate SJGS as CC Project progresses
- SJGS plant betterment projects → Improve reliability/availability of existing Units
- Engineer, Procure & Construct (EPC) CC Project execution
  - Least financial and technical risk to Owner
  - MHIA, S&L & Kiewit
- Long lead Contracts
  - Procure long lead equipment early in detailed engineering phase

Procurement Item	Units	Delivery Lead Time
Flue Gas Blowers	weeks	72
Regenerators	weeks	109
Dehydration Units	weeks	79
CO_2 Compressors	weeks	113
Transformers	weeks	104

ENCHANT ENERGY CORPORATION

Project DOR

A detailed division of responsibility was developed by the EPC team for the execution of the project to define where scope breaks are expected.

Basically MHI/S&L/Kiewit scope is as follows:

- MHI : Engineering and procurement of CCP (with some exceptions)
- S&L/Kiewit : Engineering and procurement of BOP, construction of CCP & BOP

Line	Description	EPC Phase			Remarks
		Detail Design	Procuring Entity	Construstion & Erection	
1	**Studies and Investigations**				
2	Initial Baseline Data / Field Test	Owner	NA	NA	
3	Physical Gas Flow Model	Kiewit/S&L	NA	NA	
4	CFD Flow Modeling Ductwork	Kiewit/S&L	NA	NA	
5	Transient Analysis / Boiler Implosion	Kiewit/S&L	NA	NA	
6	Plant Utilities Supply Data (Temp, Pres., Flow, Volts, Amps, etc.)	Owner	NA	NA	
7	Power Plant Interface / Tie Point Definition	Kiewit/S&L/MHI	NA	NA	
8	Hazard and Operability Study	Kiewit/S&L/MHI	NA	NA	MHI to perform Hazop for Carbon Capture with S&L attendance, S&L to perform for BOP.
9	ETAP Study	Kiewit/S&L	NA	NA	
10	Utility Supply Study (Power, Steam, Cooling Water)	Kiewit/S&L	NA	NA	
11	**Permits**				
12	Environmental Permits	Owner	Owner	NA	

Project DOR – ISBL

	EPC Scope		
	Detailed Design	**Procurement**	**Construction**
CO2 Island Process Design & Operating Philosophy	MHI	--	--
Operating Philosophy	MHI/S&L	--	--
Mechanical Equipment, Vessels & Major Pipeline Components	MHI	MHI	Kiewit
Flue Gas Ductwork & components	MHI	MHI	Kiewit
Modular Utility Racks (steel, pipe, raceway, etc.)	MHI	MHI	Kiewit
Stick Built Material (steel, pipe)	MHI	Kiewit	Kiewit
Field Erected Tanks	MHI/S&L/Kiewit	Kiewit	Kiewit
Process Equipment Buildings – CC piperack, Comp., H2 gen.	MHI	Kiewit	Kiewit
HVAC for Process Equipment Buildings	S&L	S&L/Kiewit	Kiewit
Power Distribution Center (PDC) (incl HVAC)	S&L	S&L	Kiewit
Underground Work (site grading, piping, foundation, ductbank, etc.)	S&L	S&L/Kiewit	Kiewit
Electrical equip. (xfrms, Swgr, MCCs, motors, bus ducts, UPS, MV VFDs)	S&L	S&L	Kiewit
Communication	S&L	S&L/Kiewit	Kiewit
Fire protection/detection	S&L	S&L/Kiewit	Kiewit
Raceway	S&L	S&L/Kiewit	Kiewit
Lighting, heat trace, power cables (AG & UG), grounding, catho. prot.	S&L	S&L/Kiewit	Kiewit
I&C Design	MHI	--	--
DCS, Vibration Monitoring, Field Instruments	MHI	MHI	Kiewit
CEMS Shelter	MHI	MHI	Kiewit
Fiber, instrument/control cables, supports	S&L	Kiewit	Kiewit
Commissioning & Startup	MHI/Kiewit	MHI/Kiewit	MHI/Kiewit

Project DOR – OSBL

- All Design by S&L
- All Installation by Kiewit
- Flue gas ductwork & steel rack from Units 1 & 4 to ISBL battery limit
- Sitework, drainage, roads, BOP foundations
- Steam, condensate, demineralized water, service water, air, wastewater, fire protection, and potable water piping to/from Unit 1 & 4 and ISBL battery limit
- Steam Turbine modification work
- New cooling tower & associated equipment/auxiliaries
- Wastewater treatment system & building
- CO2 pumps & building
- Misc. BOP equipment (air compressors, pumps, etc.)
- New Control Building – houses all MHI and S&L BOP control equipment
- New transformers, bus duct & power cables from Units 1 & 4 to ISBL battery limit
- CO2 compressor motors (MHI providing cost for FEED) & VFDs
- Site lighting, grounding, cathodic protection, heat tracing, communication, security
- Demolition (Unit 3 cooling tower, utilities as necessary, etc.)

Project Execution Schedule

ENCHANT ENERGY LLC
OWNER

Overall Execution Schedule

Data Date: 20-Jul-21
26-Aug-22

Activity ID	Activity Name	Orl Dur	Start	Finish	TF	SHOW	Notes
SJGS EXECUTION MS		1813	04-Oct-22	20-Sep-27	0		
Execution Milestones		1813	04-Oct-22	20-Sep-27	0		
SMSX-EPC	EPC Contract Award / LNTP	0		04-Oct-22	294		
SMSX-ETA	ETA Deadline	0		01-Jan-23	1662		
SMSX-EPCF	EPC Financial Close / FNTP	0		03-Apr-23	1632		
Permitting MS		121	13-Oct-23	12-Feb-24	-14		
MS-PRM	Receive PSD Air Permit	0		13-Oct-23	107		
MS-PRM02	Receive LOCAL Bldg Permits	0		01-Feb-24	-4		
MS-PRM03	Receive Stormwater General Permit	0		01-Feb-24	-4		
MS-PRM01	Receive NEPA Permit	0		12-Feb-24	-14		
Construction MS		0	12-Feb-24	12-Feb-24	-14		
MSX-CN	Start Construction/Site Mobilization	0	12-Feb-24*		-14		
Commissioning & Start-Up MS		434	14-Jul-26	20-Sep-27	0		
CC Island Com/SU Train MS		434	14-Jul-26	20-Sep-27	0		
MSCC-BF	CC - Backfeed	0	14-Jul-26		-14		
MSX-CO1	1st Train - Ready for Flue Gas	0		29-Apr-27	83		
MSX-FF1	First Fire U1	0		01-May-27	142		
MSX-FF2	First Fire U4	0		06-May-27	137		
MSX-COD1	Substantial Completion - U1	0		16-Jul-27	66		
MSX-COD2	Substantial Completion - U4	0		21-Jul-27	61		
MSX-FC1	Final Completion - U1	0		15-Sep-27	5		
MSX-FC2	Final Completion - U4	0		20-Sep-27	0		
SJGS - EPC Schedule_Working		1977	24-Aug-20 A	21-Jan-28	0		
MILESTONE		566	04-Oct-22	23-Apr-24	638		
PROJECT MANAGEMENT		120	04-Oct-22	31-Jan-23	1086		
ENGINEERING		1586	24-Aug-20 A	26-Dec-24	391		
PROCUREMENT		1193	17-Oct-22	21-Jan-28	0		
MODULE CONSTRUCTION		670	31-Jul-23	30-May-25	236		
DELIVERY MILESTONE(Module)		418	13-Oct-23	04-Dec-24	413		
INTERFACE MILESTONE(Site)		1026	01-Apr-23	21-Jan-28	0		
SJGS BOP ENG/PROC		1398	11-Feb-22	21-Jul-27	0		
San Juan Generating Station Carbon Capture L1		860	12-Feb-24	24-Jun-27	0		
4. Site Construction		860	12-Feb-24	24-Jun-27	0		
Civil & Structure Work		850	12-Feb-24	10-Jun-27	10		
Mechanical Installation Work		466	20-May-25	11-Mar-27	75		
Piping		675	21-May-24	14-Jan-27	115		
Instrumentation		360	15-Sep-25	04-Feb-27	100		
Electrical		345	15-Sep-25	14-Jan-27	115		
Painting / Insulation		270	06-Mar-26	18-Mar-27	70		
Pre - Commissioning		290	15-May-26	24-Jun-27	-8		
SJGS EXECUTION BOP CONSTRUCTION		604	12-Feb-24	04-Jun-26	0		
Construction		604	12-Feb-24	04-Jun-26	0		
SJGS EXECUTION COMMISSIONING		352	15-May-26	20-Sep-27	0		
Commissioning & Start-Up		350	15-May-26	29-Apr-27	-14		
Carbon Capture Island		350	15-May-26	29-Apr-27	-14		
Commissioning		309	15-Jul-26	20-Sep-27	0		
U1 Commissioning & Startup		306	15-Jul-26	15-Sep-27	3		
U4 Commissioning & Startup		309	15-Jul-26	20-Sep-27	0		

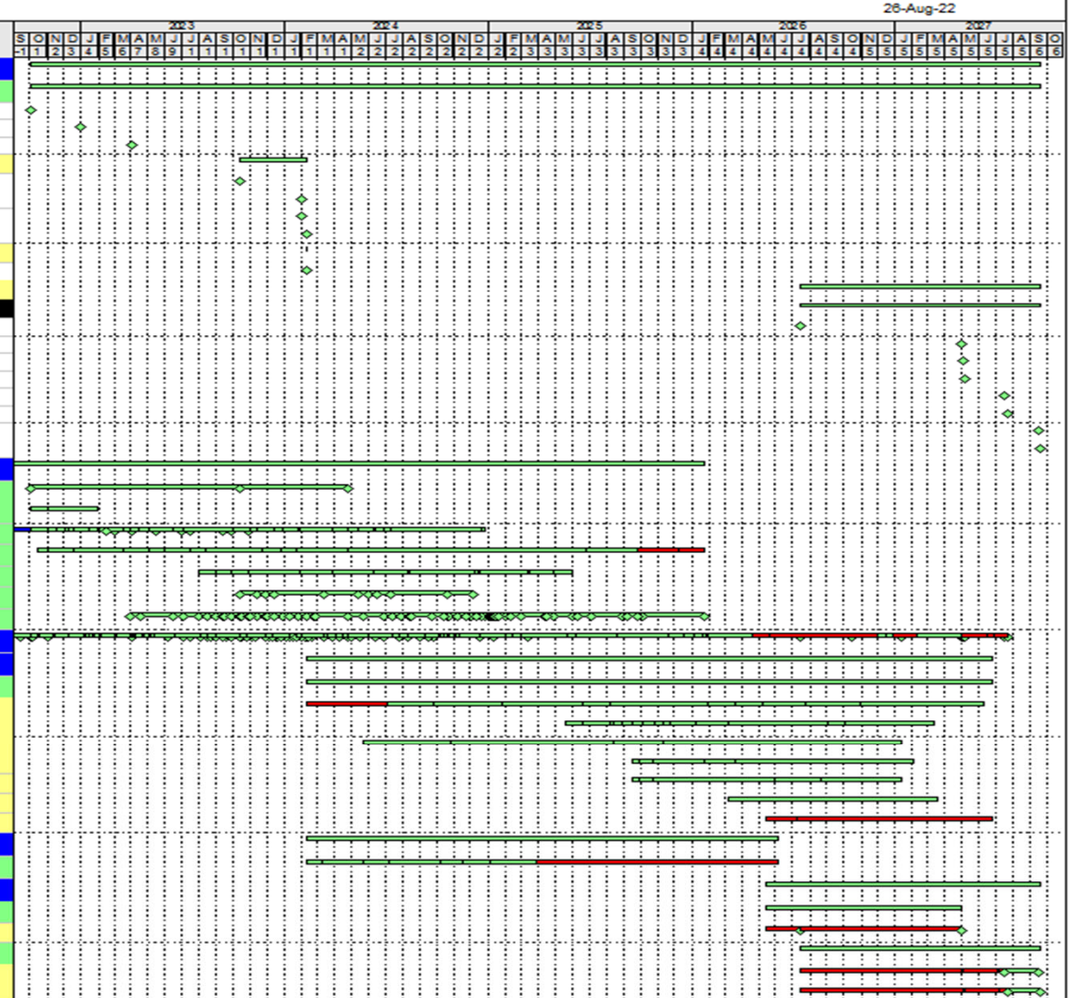

ENCHANT ENERGY CORPORATION

Project Execution Schedule

Milestone	Month
Submit Air Permit Application	Sept 2022
Limited Notice To Proceed	Oct 2022
Full Notice to Proceed	Apr 2023
Submit NEPA Permit Application	May 2023
Receive Air Permit	Sept 2023
Receive NEPA Permit	Feb 2024
Site Mobilization/Start Construction	Feb 2024
Backfeed	July 2026
Ready For Flue Gas	Apr 2027
First Fire	May 2027
Substantial Completion	July 2027
Final Completion	Sept 2027

Overall Site Plot Plan

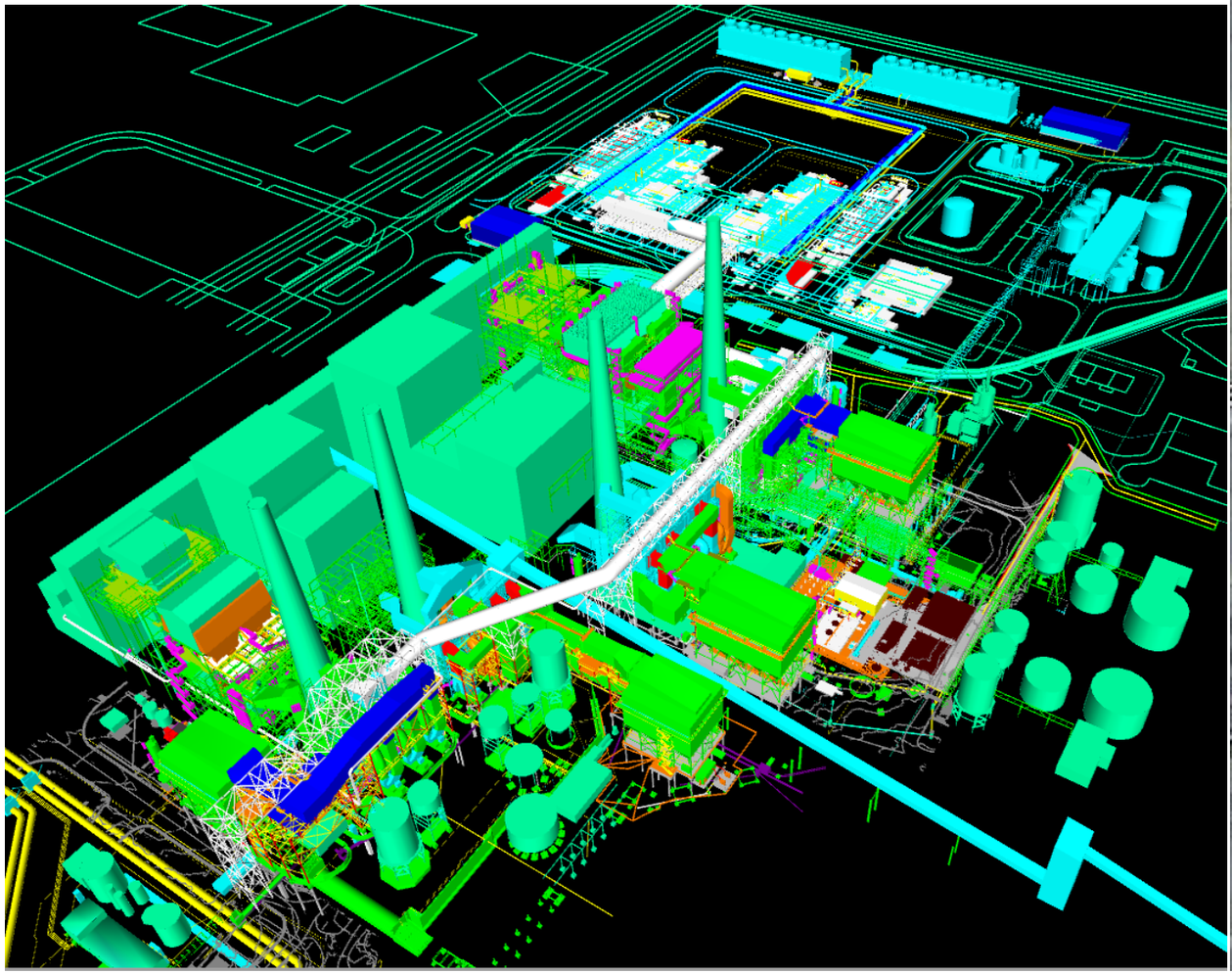

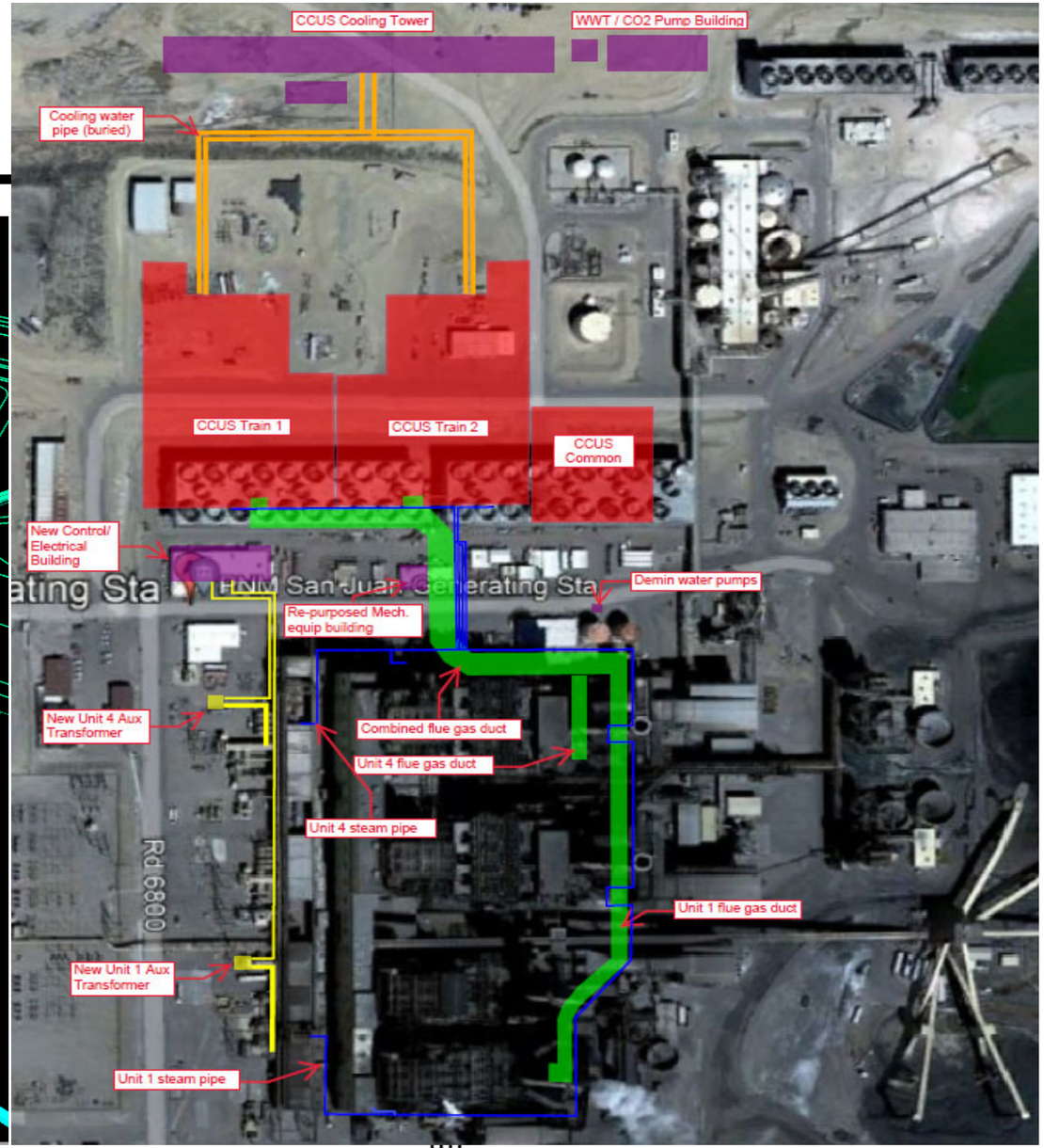

OSBL Detailed Design – Flue Gas System

- Carbon capture tie-in – Downstream of Unit 1 & 4 wet FGD
  - CFD modeling used to confirm ductwork pressure drop between FGD & MHI interface
  - Flue gas @ -6 in. w.c. & 127˚F @ MHI interface

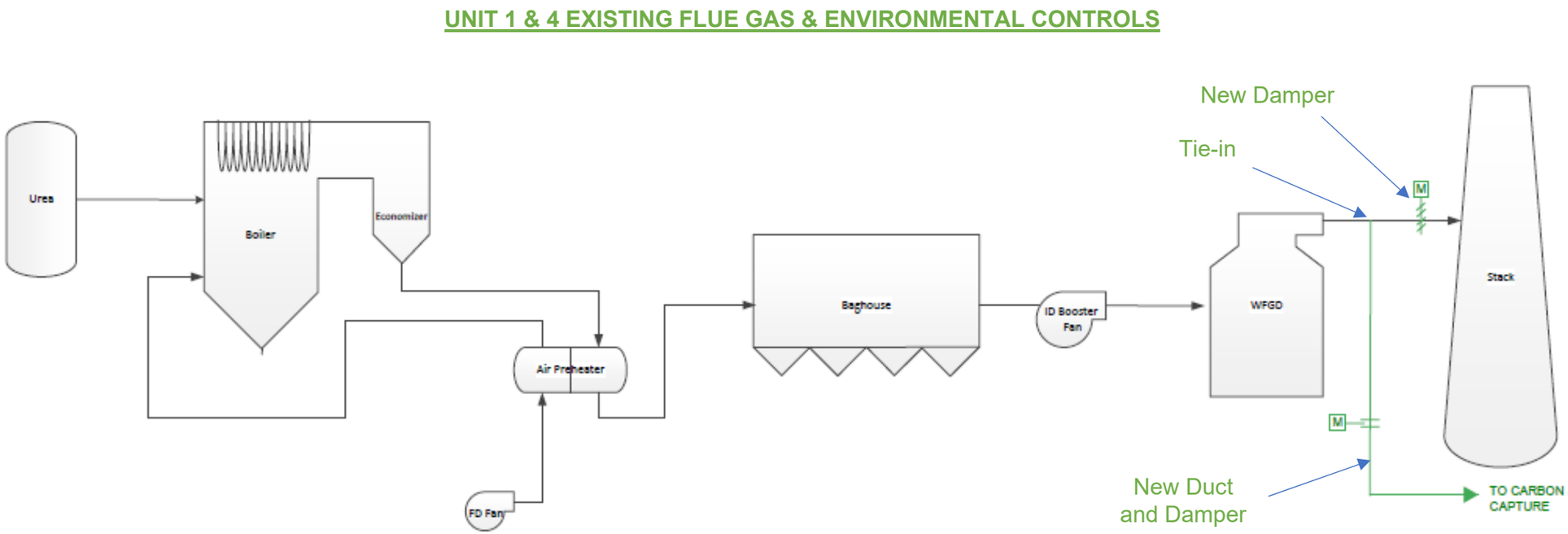

OSBL Detailed Design – Flue Gas System

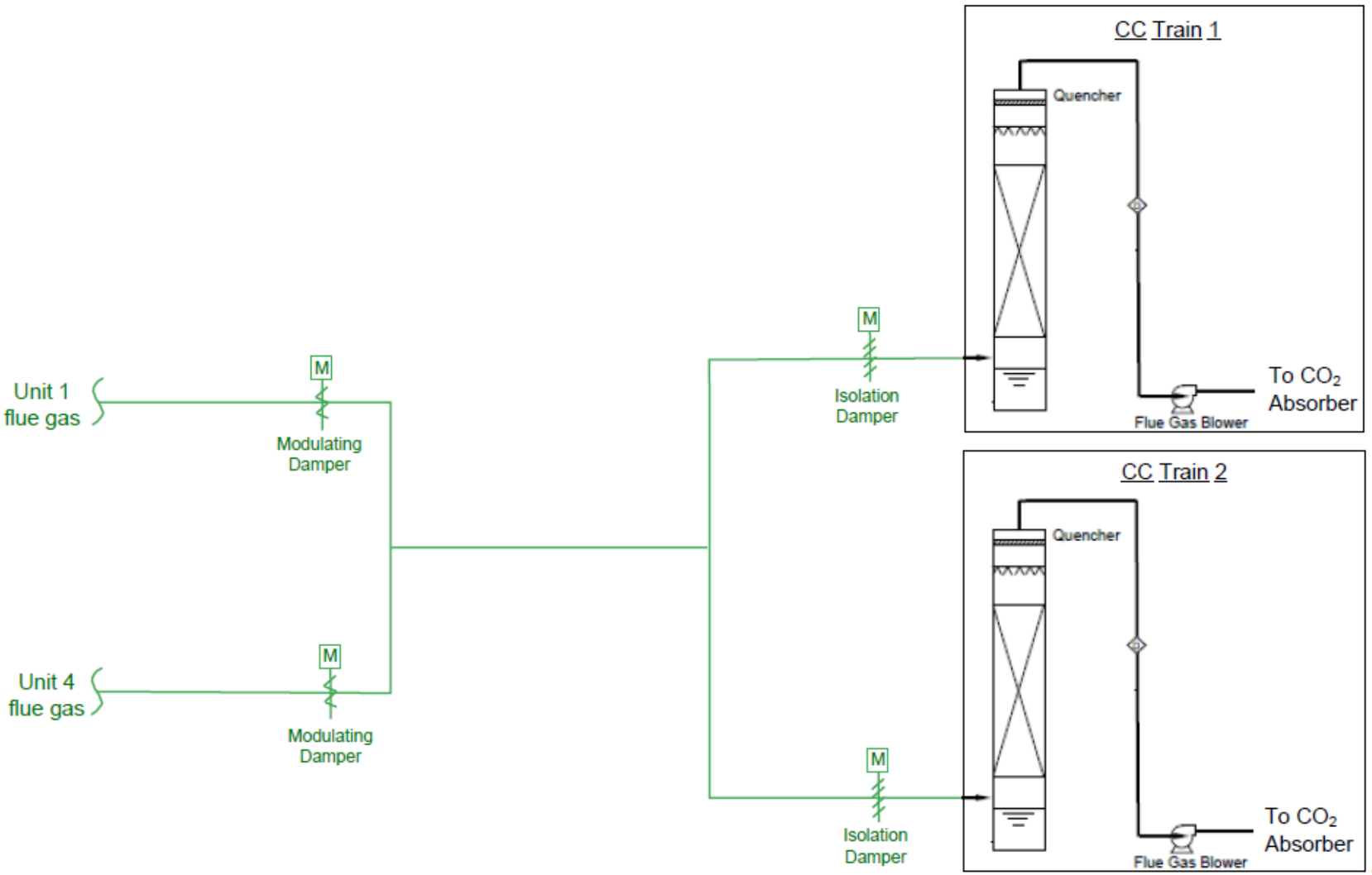

ENCHANT ENERGY CORPORATION

OSBL Detailed Design – Flue Gas Duct

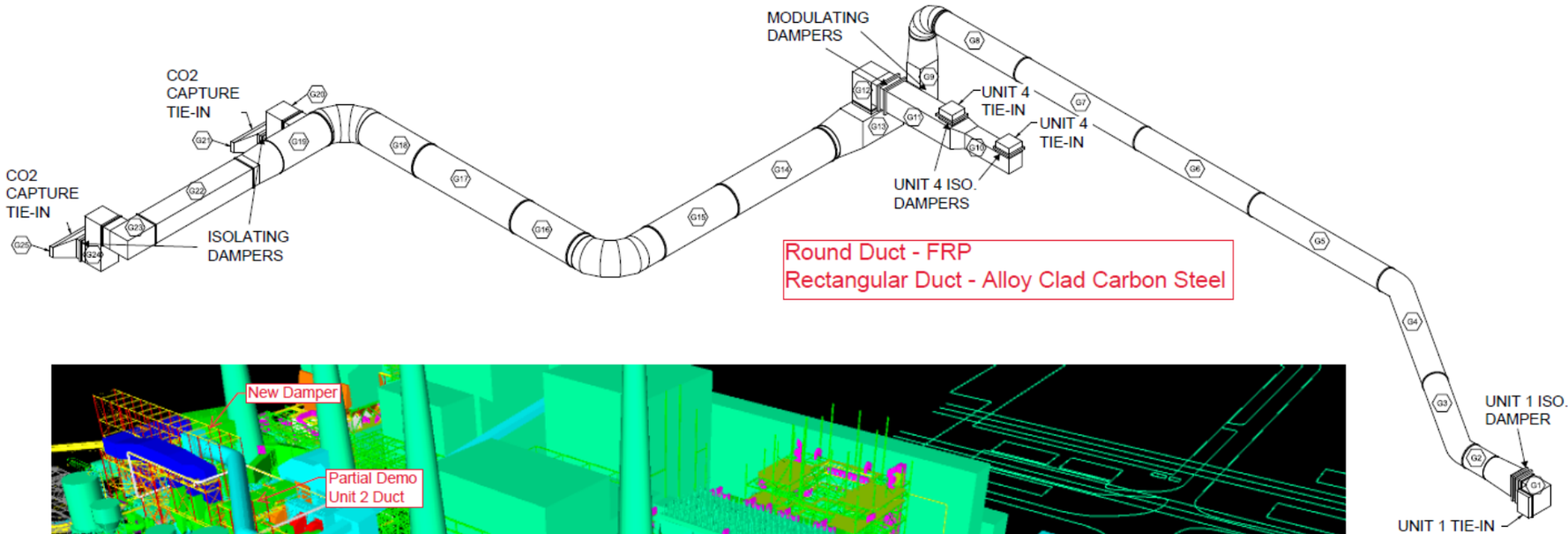

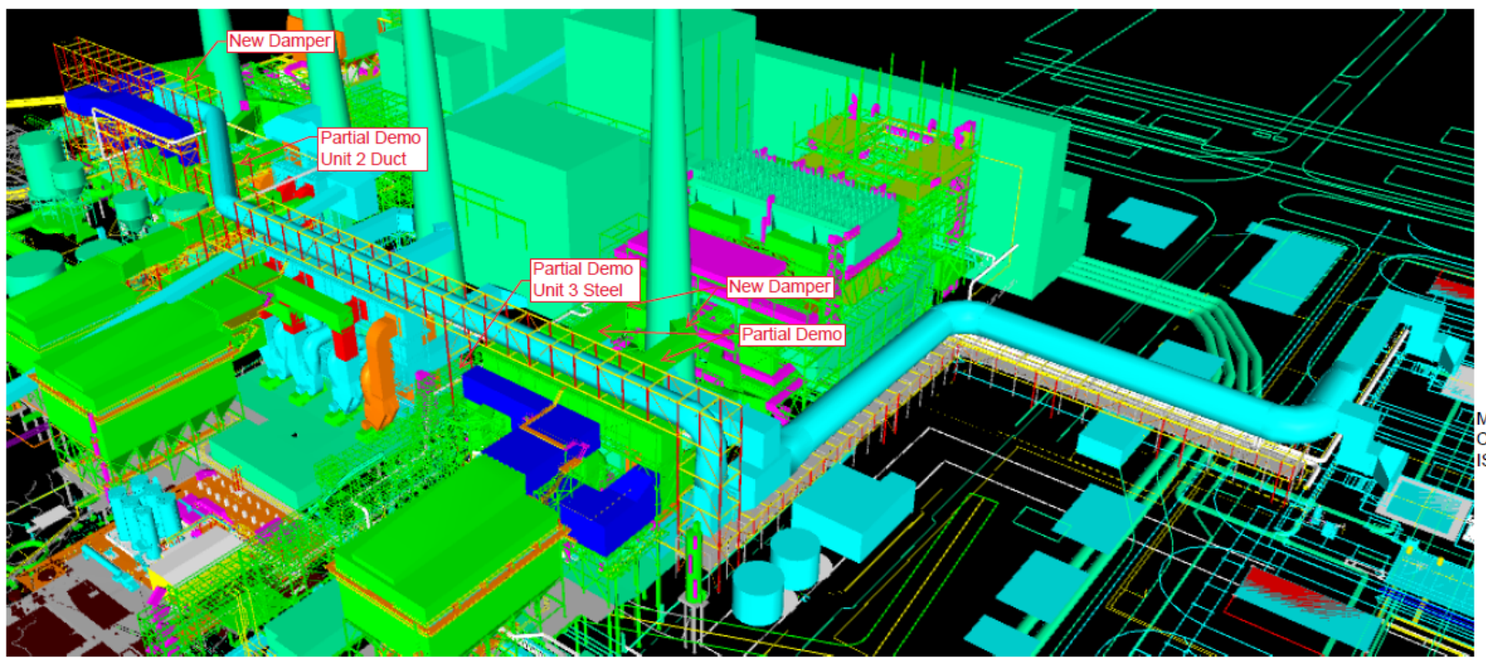

OSBL Detailed Design – Steam Supply

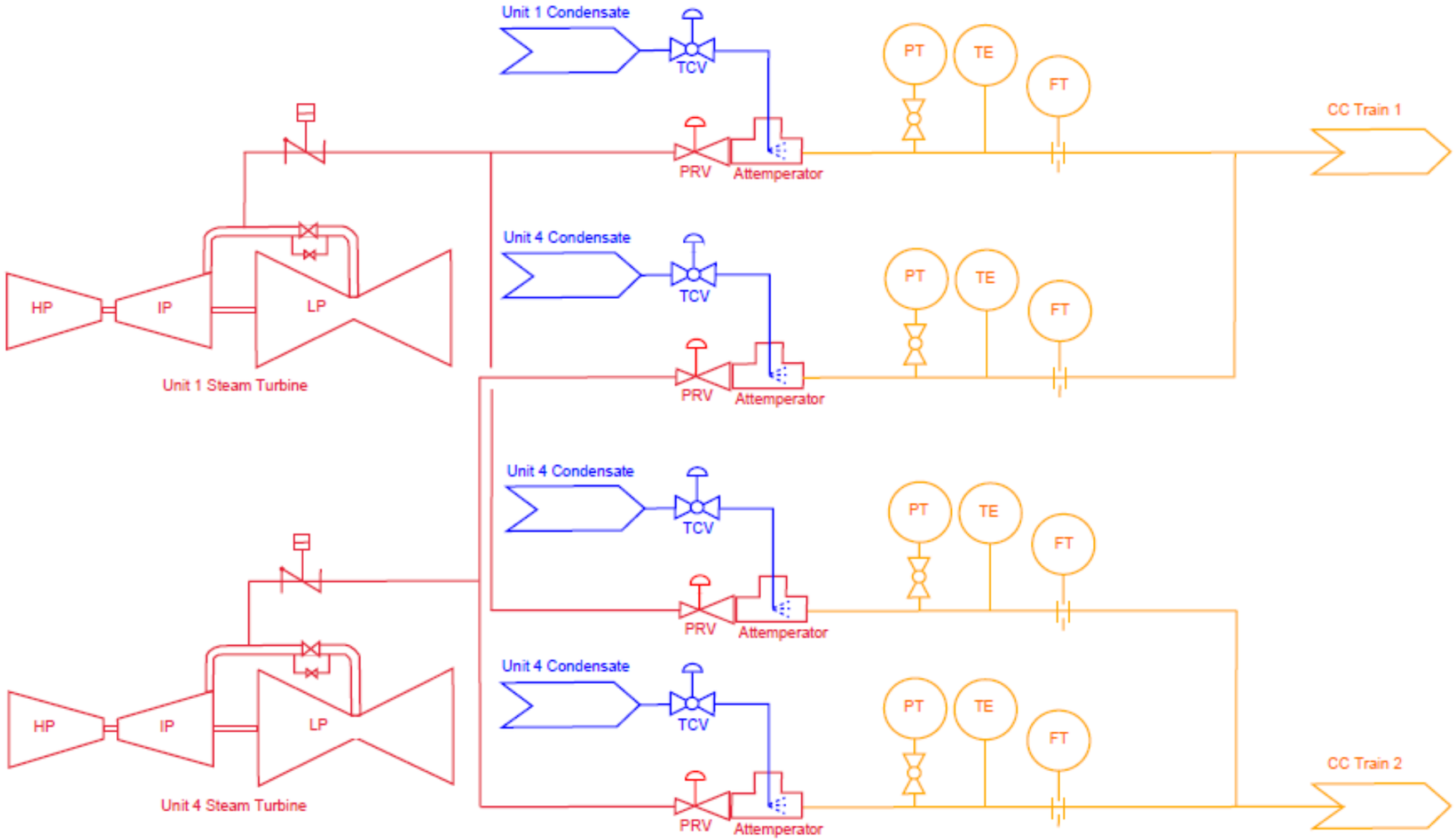

ENCHANT ENERGY CORPORATION

OSBL Detailed Design – Steam Supply

- Steam extraction from SJGS Unit 1 & 4 steam turbine IP/LP crossover
  - Unit 1 = 148.4 psia, 719.7˚F @ full load
  - Unit 4 = 178 psia, 690˚F @ full load
- Carbon Capture Process requires low pressure saturated steam
- Steam conditioning required:
  - Reduce SJGS steam pressure → steam pressure control valves
  - Reduce SJGS steam temperature → existing condensate system
- Due to large volumetric flow, Unit 1 and Unit 4 pipe headers split into 2 pipes
- Unit 1 header #1 and Unit 4 header #1 → Carbon Capture Train #1
- Unit 1 header #2 and Unit 4 header #2 → Carbon Capture Train #2
- Flows from Unit 1 and Unit 4 proportioned based on Unit size

ENCHANT ENERGY CORPORATION

OSBL Detailed Design – Steam Turbine Tie-ins

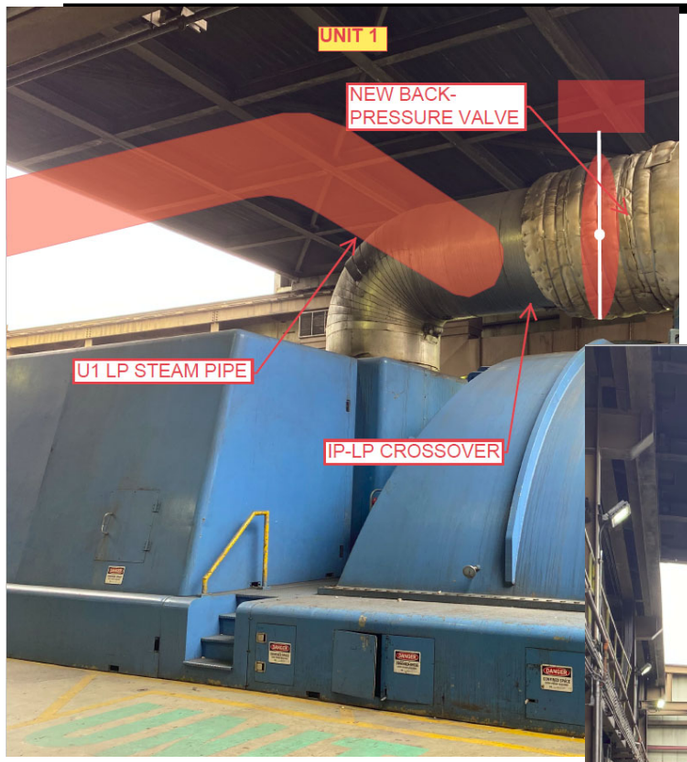

OSBL Detailed Design – Condensate Return

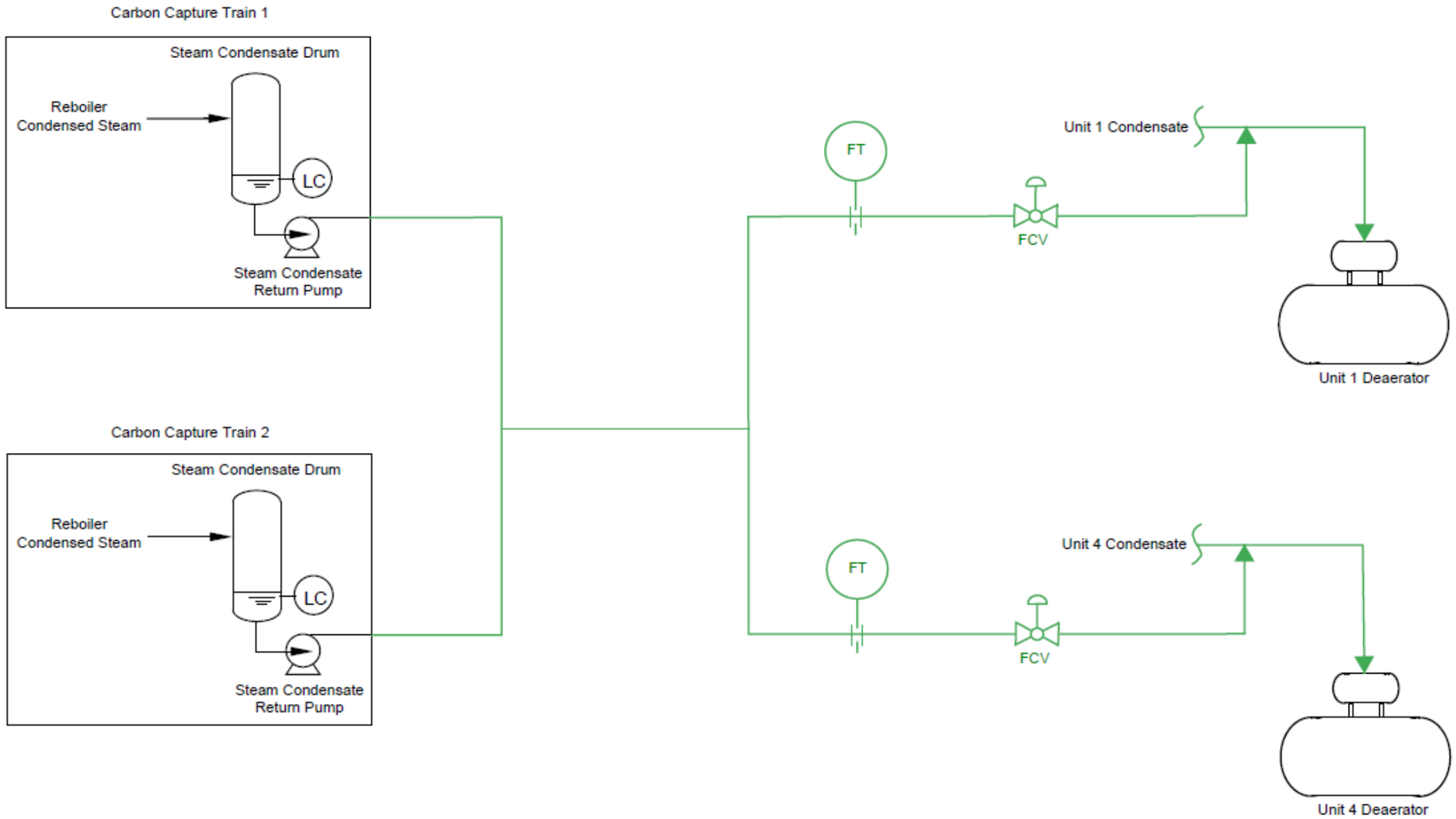

OSBL Detailed Design – Condensate Return

- Condensed Steam from Carbon Capture Reboilers
  - Condensate collected in drums (pressure vessels) at each carbon capture train
  - Pumped back to SJGS, both train flows combined into common header
- Closely matches condensate temperature entering Unit 1 and Unit 4 deaerators
- Condensate flow split to Unit 1 and Unit 4, proportioned based on Unit size
- Re-enters power cycle just upstream of each Units' deaerator

OSBL Detailed Design – Cooling System

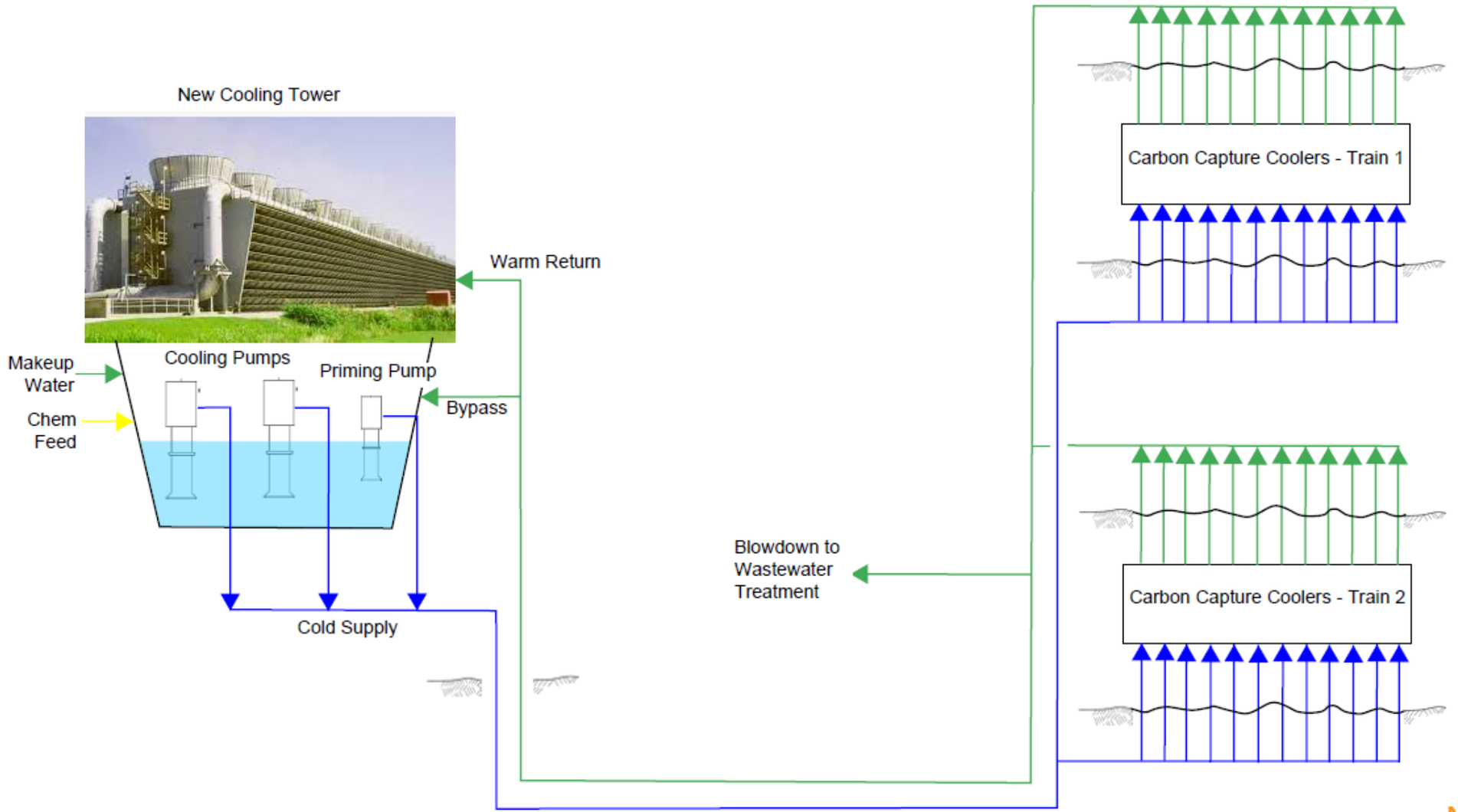

OSBL Detailed Design – Cooling System

- Carbon Capture has a large cooling demand
- New 18-cell mechanical draft evaporative cooling tower
  - Crossflow design, splash fill
  - Fiberglass Reinforced Plastic (FRP)
  - 250 hp fans/motors
- Two(2) 50% capacity pumps @ 150,000 gpm flow, total of 300,000 gpm
- Small priming pump for system fill and pressure maintenance during shutdown
- Piping specs:
  - Buried headers – Concrete/mortal lined carbon steel
  - Above grade – Passivated carbon steel
- Bypass system to collection basin; use during cold weather to maintain minimum temperature
- Makeup water from SJGS raw water system; accounts for evaporative, drift & blowdown losses
- Chemical Treatment to control: pH, biofouling, corrosion
- Blowdown to control total dissolved solids (TDS)

OSBL Detailed Design – Power Supply

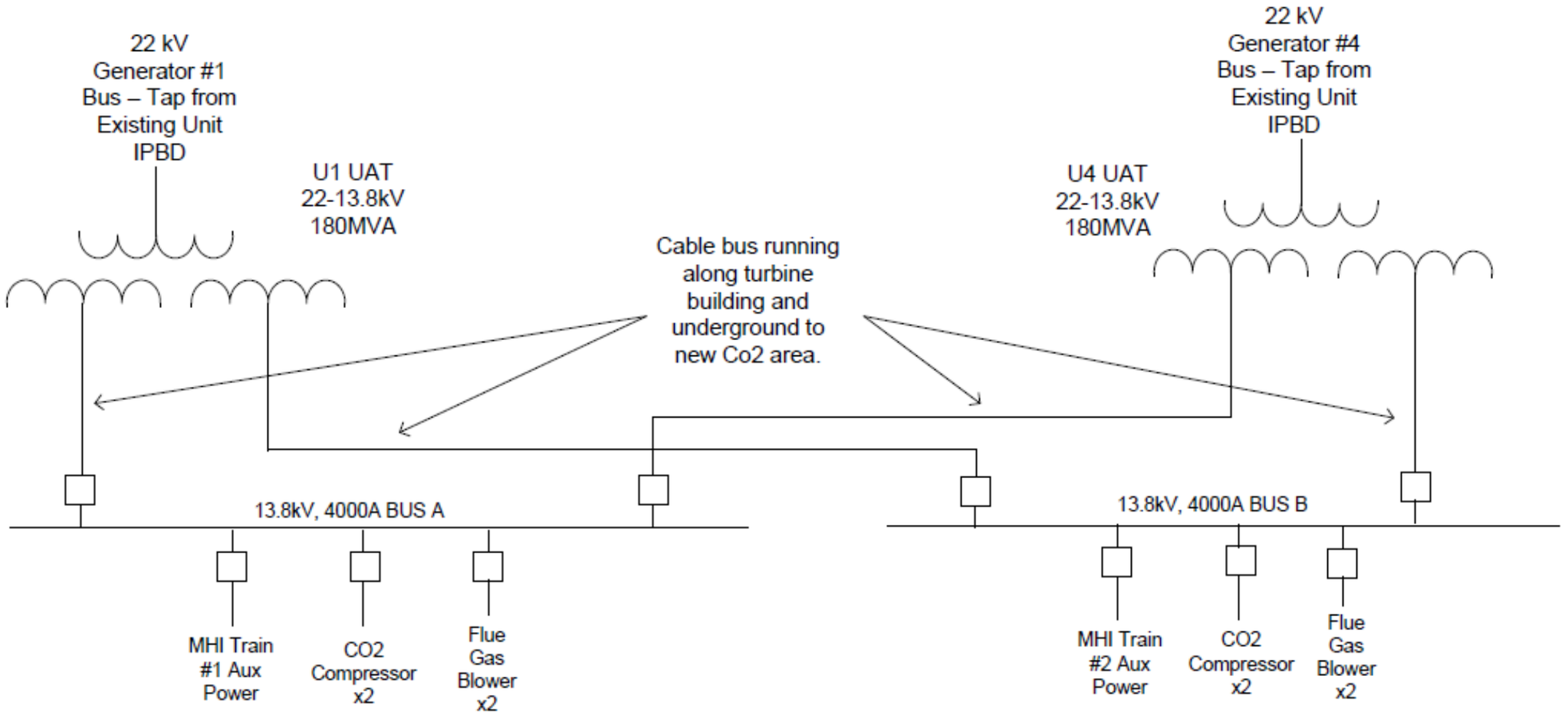

ENCHANT ENERGY CORPORATION

OSBL Detailed Design – Electrical Tie-in

- Power sourced directly from generating units
- Tap into existing IPBDs at Units 1 & 4
- Two new large transformers for aux power system
- Redundancy to provide full power to both trains under loss of a transformer
- No power when Units 1 and 4 are both offline

OSBL Detailed Design – CO2 Transport

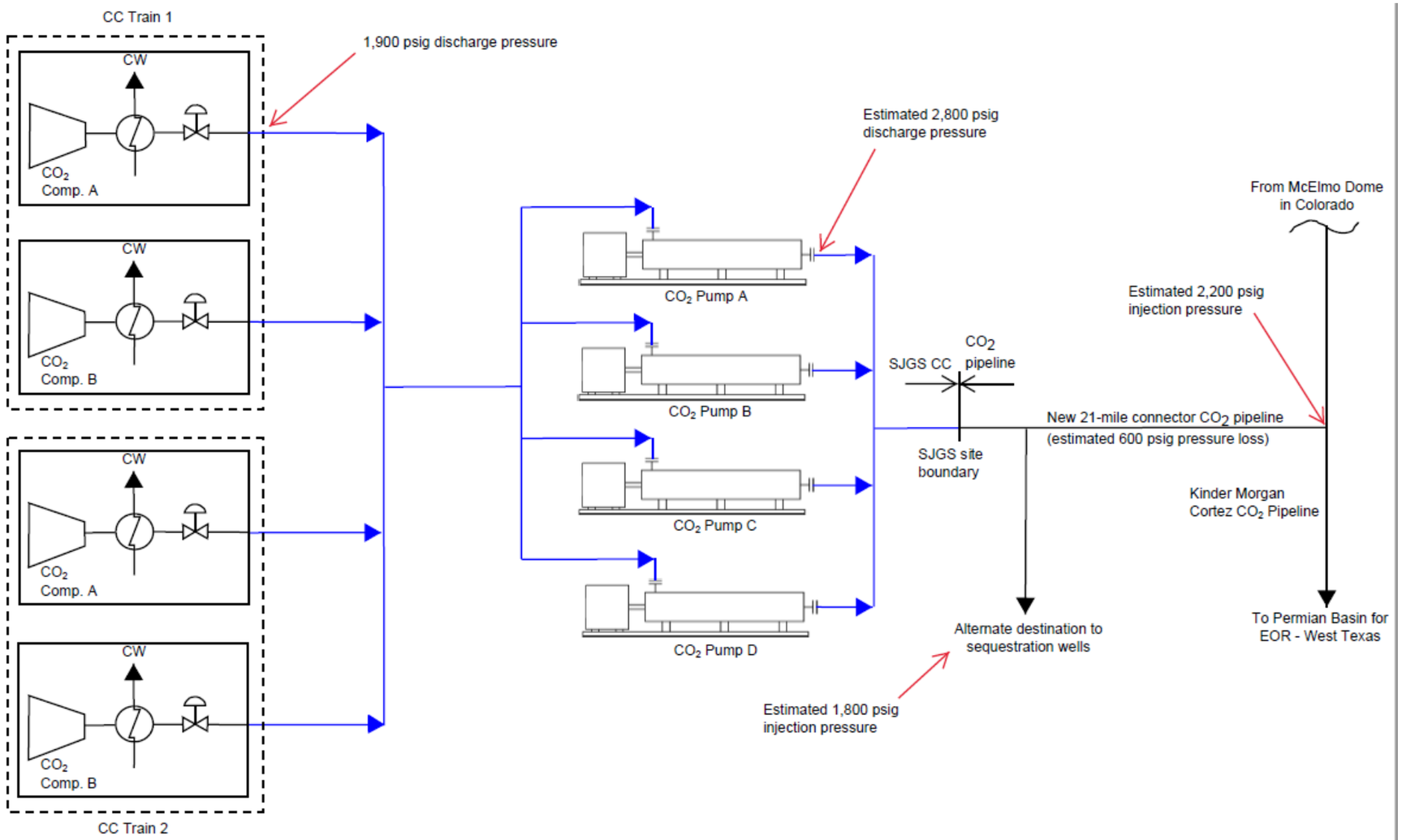

ENCHANT ENERGY CORPORATION

OSBL Detailed Design – CO2 Transport

- CO_2 conditions from MHI carbon capture:
  - 20,026 metric ton / day capacity
  - 1,900 psig, 120˚F
- Two possible destinations for the CO_2
  - Kinder Morgan Cortez Pipeline – Enhanced Oil Recovery (EOR)
  - Sequestration Wells
- 2,200 psig injection pressure at Cortez tie-in ➡ 2,800 psig needed from SJGS boundary
  - Estimated 600 psig pressure drop along 21-mile pipeline
  - CO_2 pumps required to boost pressure from 1,900 psig at MHI terminal point
    - Installation of pump station at SJGS determined to be best strategy
  - At these pressures, CO_2 is supercritical (dense phase)
  - Governs the pressure rating of the system
- 1,500 to 1,800 psig pressure to inject into Class VI sequestration wells
  - Divertor station and pressure reduction to be provided off-site as necessary
- Overpressure protection to be provided as required by ASME piping codes.

ENCHANT ENERGY CORPORATION

OSBL Detailed Design – Supporting BOP Systems

Demineralized Water

- Required for carbon capture pump seals, H2 generation, flue gas blower washing system
- Sourced from existing Unit 4 demineralized water storage tanks
- Two(2) pumps and distribution to terminal point at each CC Train
- Supply conditions: 110 psig, 50-90˚F

Potable Water

- Required for emergency eyewash/shower stations near chemical areas
- Bathrooms & drinking water at new Control building
- Sourced from existing SJGS potable water system & pumped to new users
- Supply conditions: 100 psig, 60-100˚F (per ANSI Z358.1 for tepid water)

OSBL Detailed Design – Supporting BOP Systems

Fire Protection

- Required for safety & fire protection in new areas per NFPA
- Expand existing SJGS fire protection system
- Hydrants, building suppression & alarm systems as required

Instrument/Service Air

- Required for various pneumatic control valves, precoat cleaning, air hose stations
- New air compressors, air dryers and receiver tanks
- Supply conditions: 125 psig, 110˚F

Service/Raw Water

- Provides cooling tower makeup, steam drain flash tank quenching, washdown hose stations
- Tie into existing SJGS raw water system
- Supply conditions: 135 psig, 80˚F

OSBL Detailed Design – Supporting BOP Systems

Wastewater

- Collects cooling tower blowdown and sends to treatment system
  - Primary destination to existing SJGS brine concentrators
  - Excess sent to new wastewater treatment system
- Collects cooled steam drains in sumps, and pumps to existing SJGS process pond for reuse
- Collects triethylene glycol (TEG) waste and sends to existing south evaporation ponds
  - Can't be treated

Drains

- Flue gas duct drains
- Steam header drains near existing Unit 1 and 4 ➡ drain to respective condenser
- Steam header drains near carbon capture ➡ drain to new flash tanks

OSBL Detailed Design – 3D Model

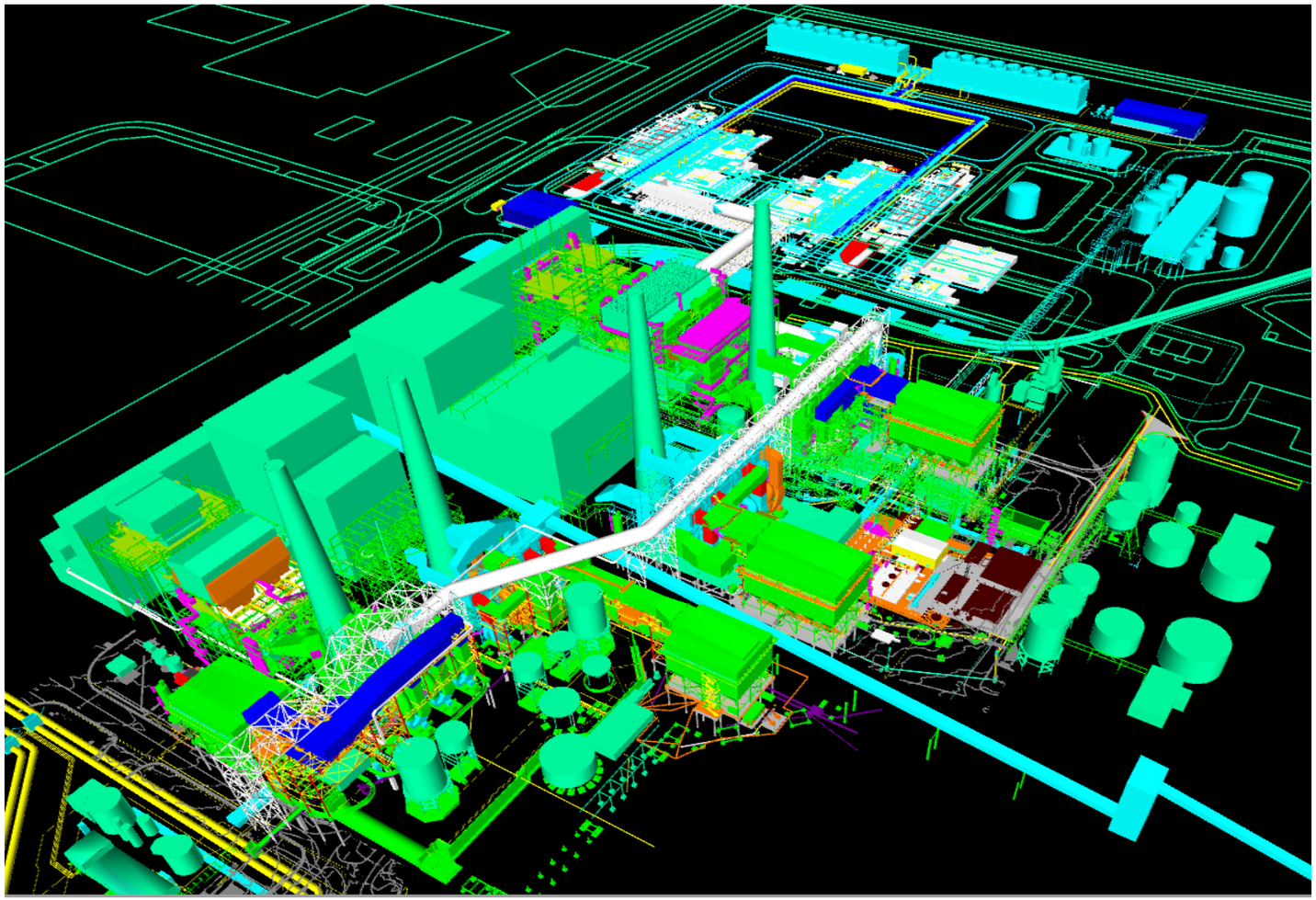

OSBL Detailed Design – 3D Model

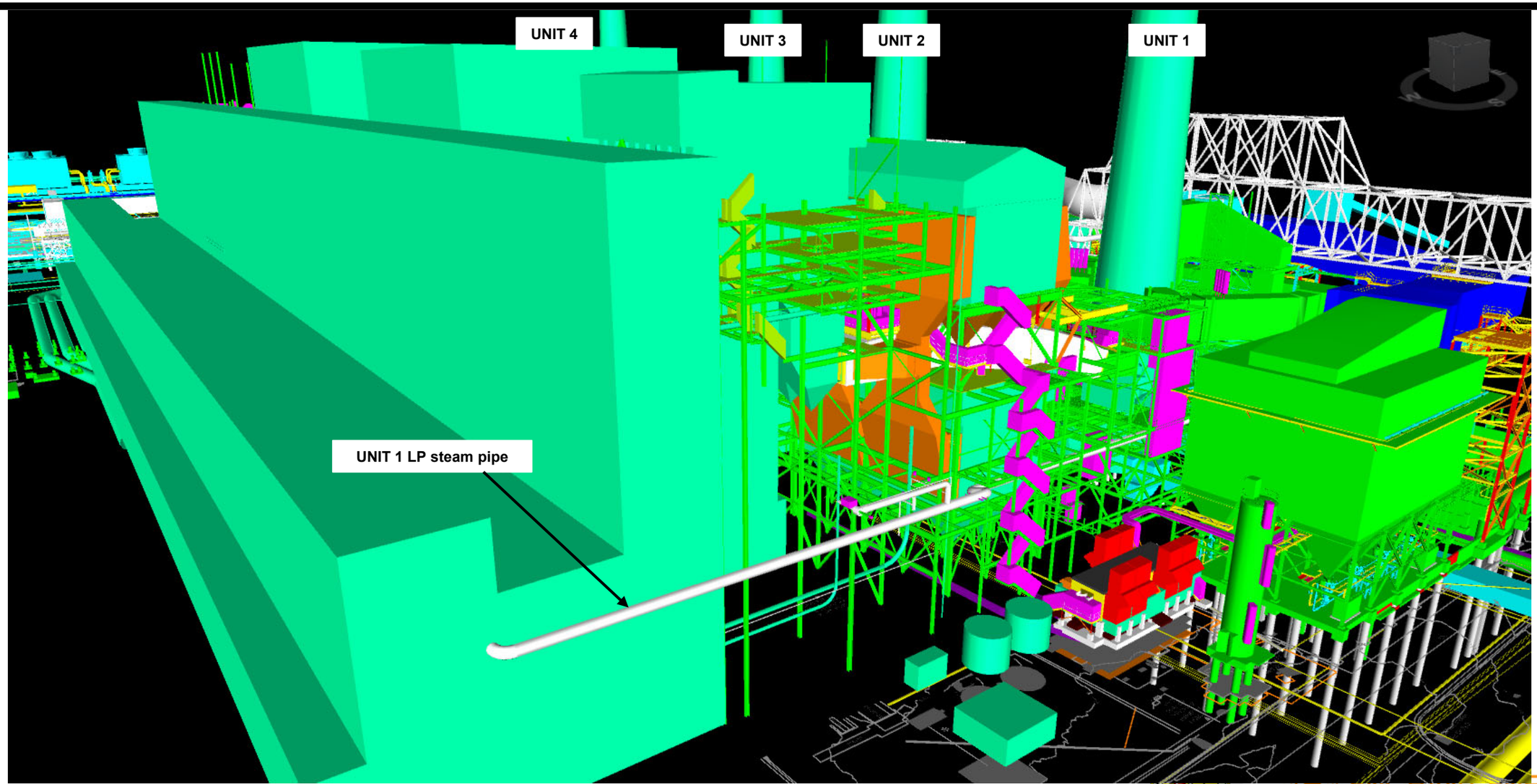

OSBL Detailed Design – 3D Model

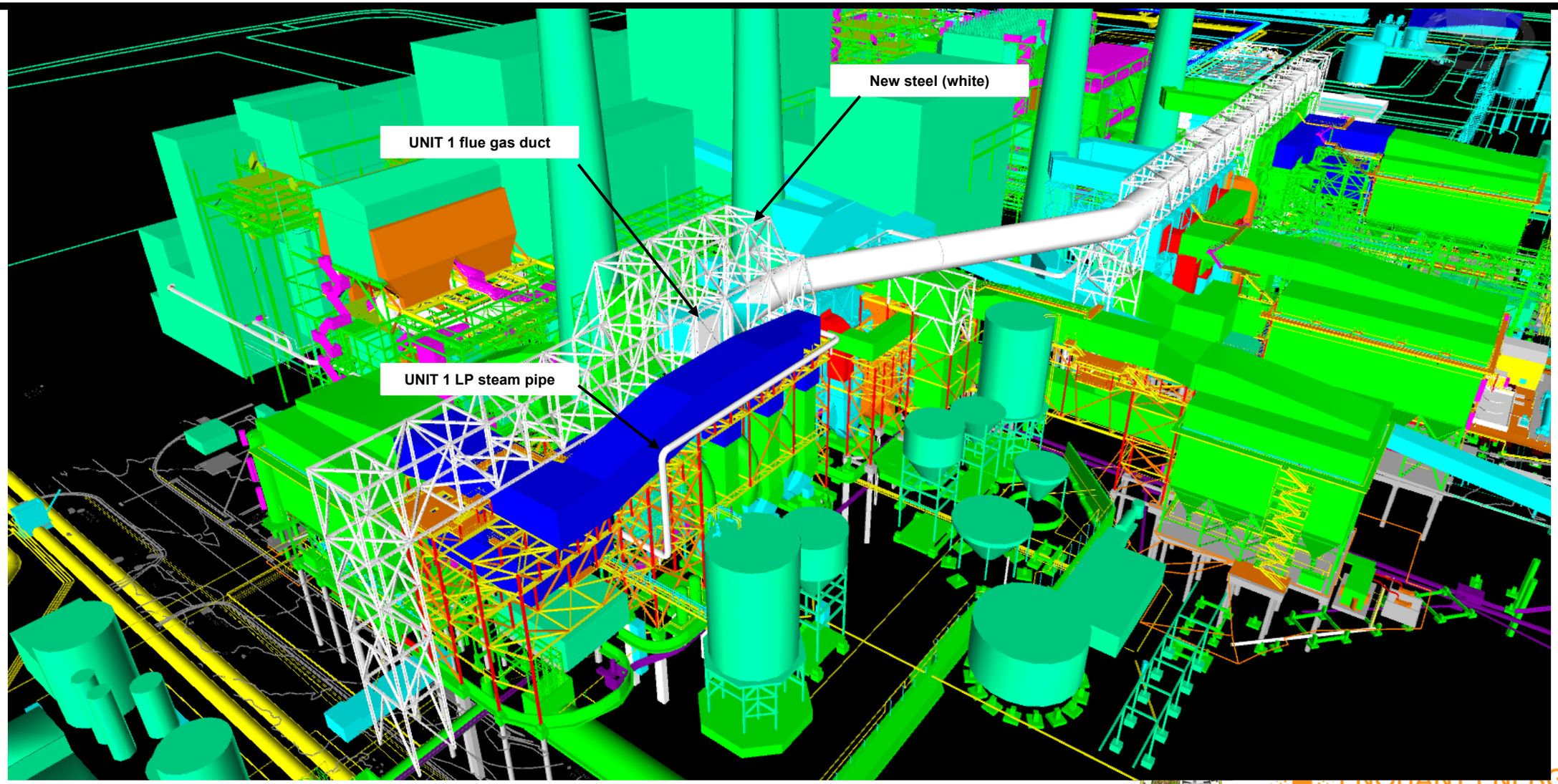

OSBL Detailed Design – 3D Model

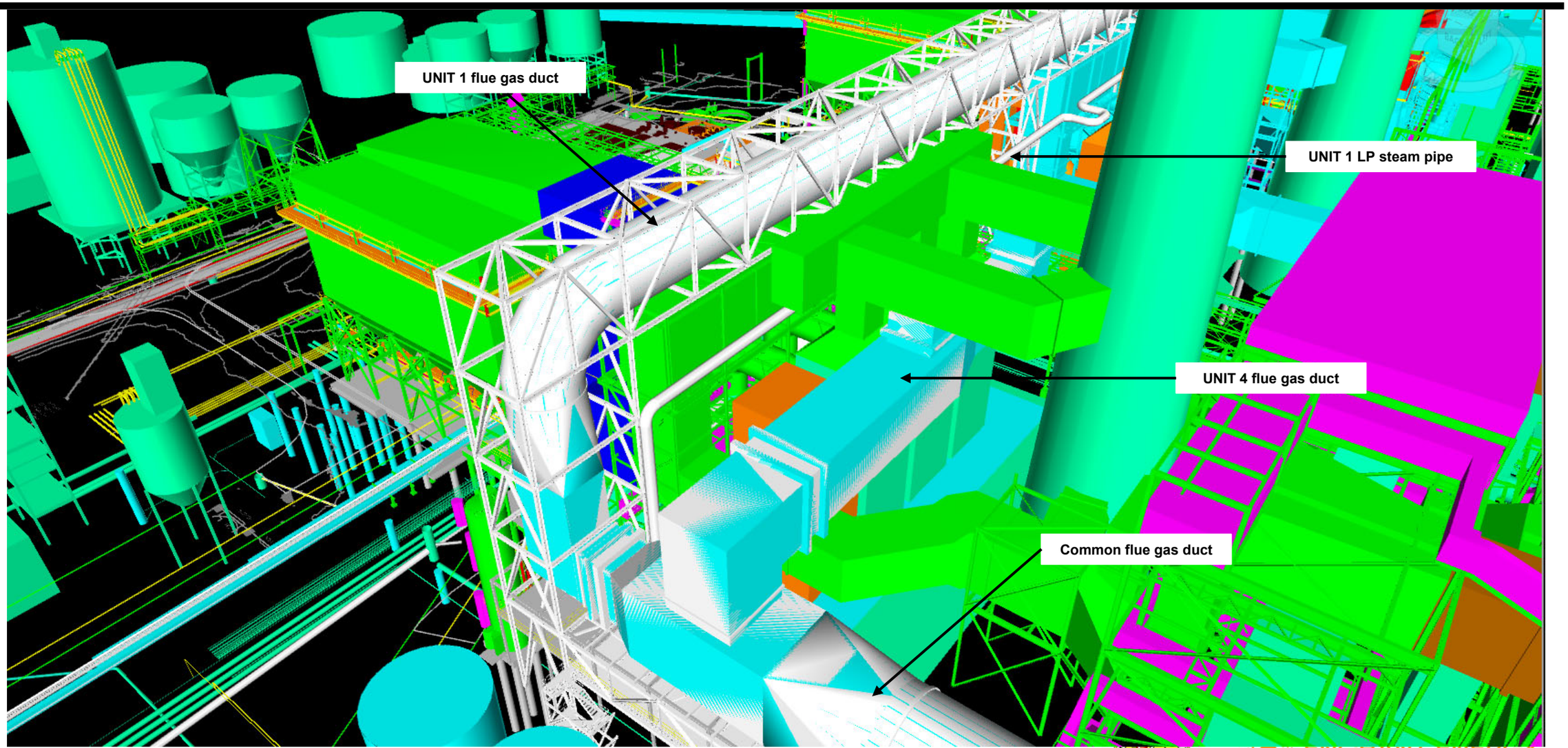

OSBL Detailed Design – 3D Model

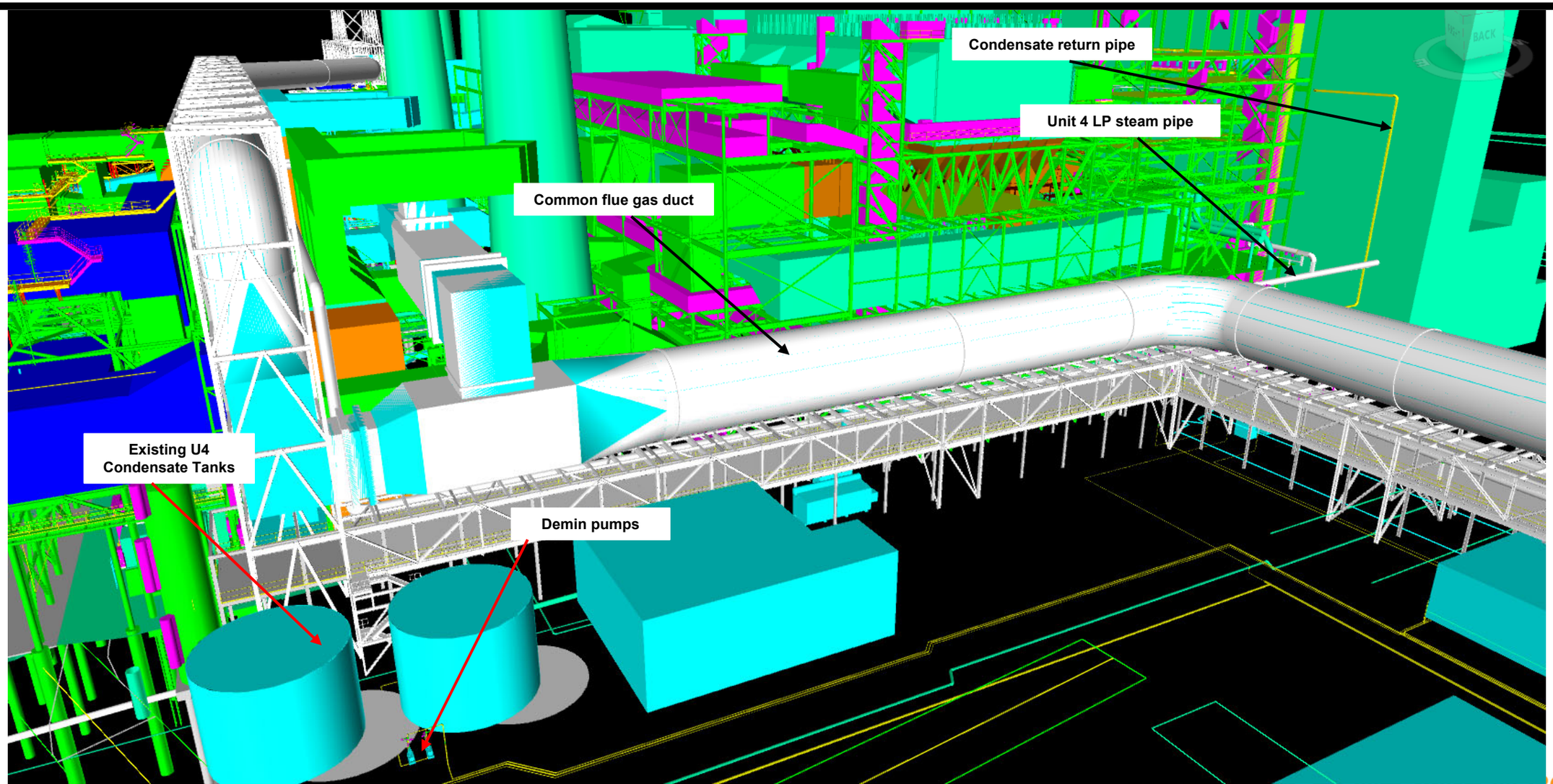

OSBL Detailed Design – 3D Model

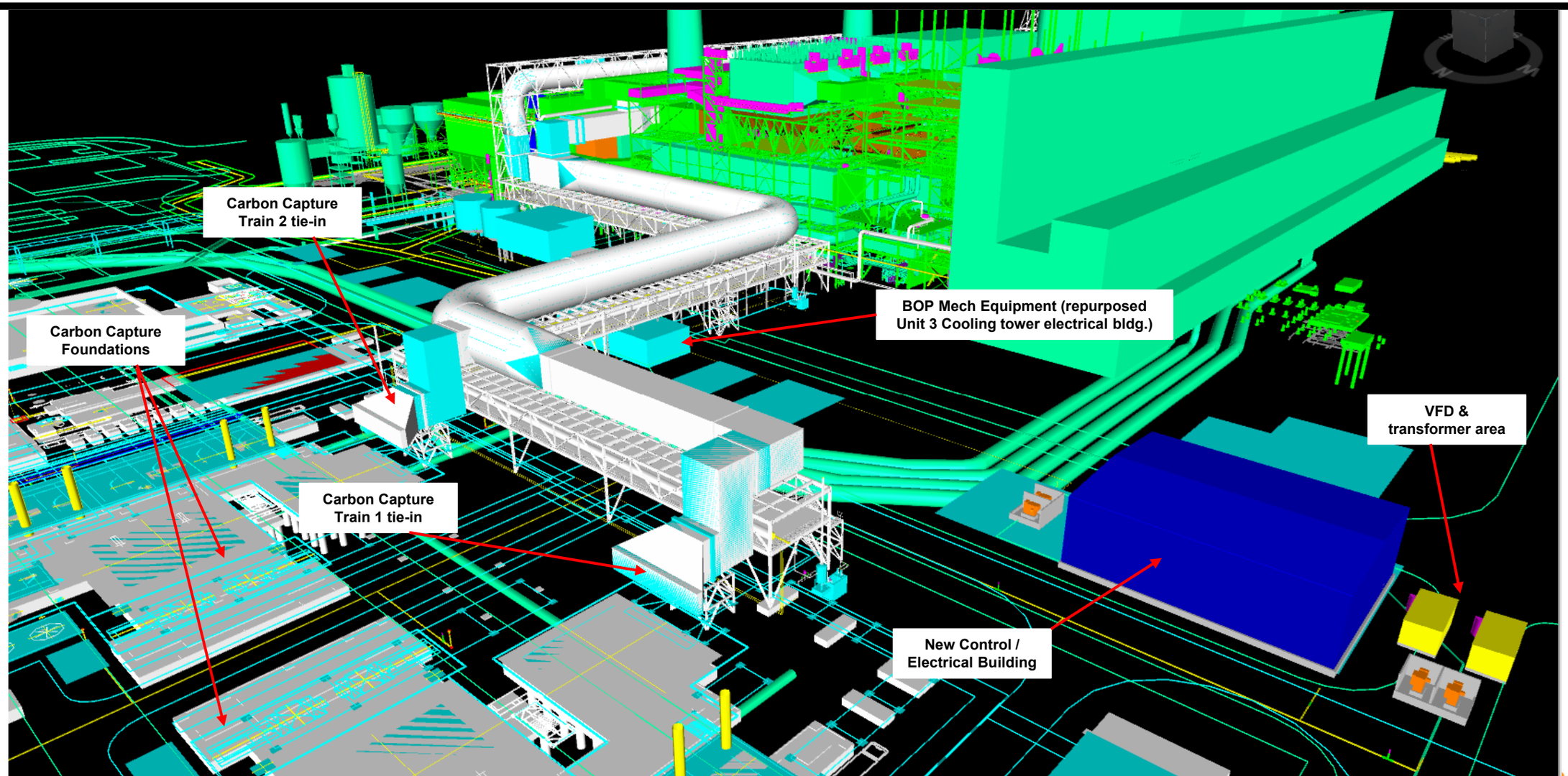

OSBL Detailed Design – 3D Model

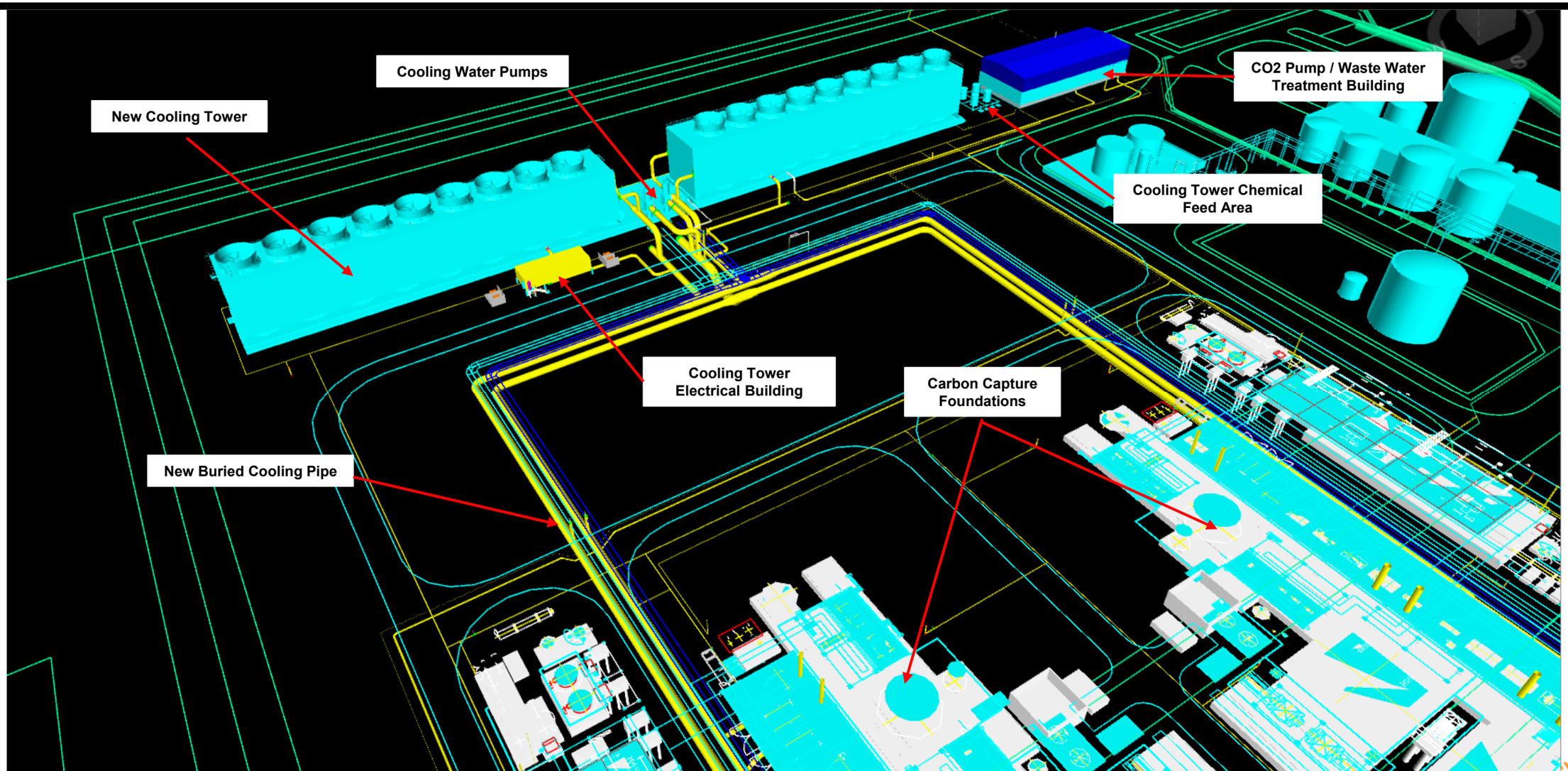

Overall Plant Performance

Parameter	Units	Data[1]
Baseline Plant Gross Capacity	MW_{GROSS}	914
Baseline Plant Aux Power Consumption	MW	67
Baseline Plant Net Power Output	MW	847
Baseline Boiler Heat Input	MMBtu/hr	9,587
Baseline Plant Net Output	MW_{NET}	847
Baseline Plant Net Unit Heat Rate	Btu/kWh_{NET}	10,489
Future (w/ CO_2 Capture) Net Output	MW_{NET}	482
Future (w/ CO_2 Capture) Net Unit Heat Rate[4]	Btu/kWh_{NET}	19,873

ENCHANT ENERGY CORPORATION

Overall Plant Cost – Capital Cost

- Carbon Capture Island equipment cost estimate
- Major BOP engineered equipment quotes
- Estimated equipment costs for minor equipment
- Engineered quantities – carbon capture island & BOP
- Construction derived quantities
- Preliminary labor analysis conducted to understand labor rates and draft attraction
- Construction manhours derived from recent project unit rates where applicable. Petra Nova actual project labor unit rates were used where appropriate
- Means and methods applied based on regional best practices for the area
- Appropriate lessons learned and best practices with MHI collaboration included
- Estimate reflects pricing as of May 31, 2022
- Total Project Capital Cost = $1.55 billion

Overall Plant Cost – O&M & Cost of Capture

O&M Cost

- Costing include first-year variable and fixed O&M costs
- Variable O&M costs include energy and non-energy related costs at a projected 85% annual capacity factor
- Fixed O&M costs include operator labor and maintenance material and labor costs

Cost of Capture

- Total project capital cost annualized and combined with annual O&M
- Based on >6M tonnes/yr CO2 captured at 85% annual capacity factor
- Costs exclude transportation, storage, and monitoring of the CO_2 off-site

Total First Year Fixed O&M Costs

Parameter	Unit	Amount
Total O&M Costs ($2022)	$/yr.	**170,706,000**

Total Cost of Capture

Parameter	Unit	Amount
Total CO_2 Capture Rate – at 85% CF	metric ton/yr.	6,212,980
Lifespan of Facility	years	20
Interest Rate	%	4.5
Annualized Factor	--	0.0769
Total Capital Cost	$	1,554,276,000
Annualized Capital Cost	$/yr.	119,487,000
Total First-Year O&M Cost	$/yr.	170,706,000
Total Annual Cost	**$/yr.**	**290,193,000**
Cost of Capture	**$/tonne**	**46.7**

Conclusions & Closing Statements

- MHI's amine-based carbon capture applied to SJGS Units 1 & 4 (914 MWg)
- Use existing San Juan facilities for steam, water and power
- New cooling system
- Export CO_2 to Kinder Morgan CO_2 pipeline and sequestration wells
- EPC execution strategy – MHI/S&L/Kiewit
- Project - $1.55 billion capital cost, 4.5-year completion schedule
- Next steps
  - Secure financing and funding
  - Finalize ownership transfer & secure PPA agreements
  - Continue permitting activities – air permit, NEPA, etc.
  - EPC agreement; kickoff early detailed engineering activities
  - SJGS plant betterment
  - CO2 off-take agreements

Acknowledgements

- **City of Farmington** is Enchant Energy's public partner to add carbon capture to San Juan Generating Station
- **Westmoreland Mining LLC** owns and operates 12 coal mines in the US and Canada, including the San Juan Mine which supplies the fuel for the San Juan Generating Station
- **Kiewit Power Constructors** provides construction and engineering services in a variety of markets including transportation; oil, gas, and chemical; power; building; water/wastewater; industrial; and mining. Kiewit had 2020 revenues of $12+ billion and employs 27,000 staff and craft employees. **A subsidiary of Kiewit completed Petra Nova CCUS Project on time and under budget in 2016**
- **Mitsubishi Heavy Industries, Ltd. (MHI)** is a world leading industrial firms with 80,000 group employees and annual consolidated revenues of $38 billion. MHI delivers innovative and integrated solutions across a wide range of industries from commercial aviation and transportation, to power plants and gas turbines, and from machinery and infrastructure to integrated defense and space systems. **MHIA, wholly owned MHI subsidiary, provided the technology for the successful Petra Nova CCUS Project**
- **Sargent & Lundy (S & L)** is a global leader in power and energy engineering, with expertise in grid modernization, renewable energy, energy storage, nuclear power, and fossil fuels. **Sargent & Lundy was NRG's Owner's Engineer for Petra Nova CCUS Project**
- **US Department of Energy.** Major funder of CCUS technology development under the current and two past Administrations as a way for the US to contribute to the reduction of global CO_2 emissions. Provided ~$250 million of funding for the Petra Nova project and is providing (without cost share) $7.4 million of funding for the SJGS FEED study and $14.6 million in funding for the development of EPA Class VI Sequestration Wells near SJGS

Acknowledgements

- **New Mexico Institute of Mining and Technology (NM Tech)** is an internationally recognized research university, focusing on science, technology, engineering, entrepreneurialism, and mathematics. New Mexico Tech is leading the DOE project *"San Juan Basin CarbonSAFE Phase III: Ensuring Safe Subsurface Storage of CO_2 in Saline Reservoirs*" for development of EPA Class VI carbon dioxide injection wells for carbon sequestration
- **San Juan College (SJC).** The College's School of Energy has launched carbon capture workforce training programs in partnership with Farmington & Enchant. SJC is also creating carbon capture degree and certificate programs under an MOU with the City of Farmington and Enchant Energy
- **Bank of America.** Retained as lead financial advisor for the Carbon Capture Island tax equity, and project financing planned for 2022. Top-ranked tax equity placement bank in the U.S. for the last five years
- **Baker Tilly.** Retained as Enchant's original development capital advisor. Contracted to provide DOE compliance and accounting services
- **CohnReznick.** Retained as leading 45Q tax equity financing, and financial structuring firm
- **Sidley Austin** provides varied legal counsel for Enchant, as a top ranked US energy law firm

Contact Information

Hank Adair
Electric Utility Director
Farmington Electric Utility System
hadair@fmtn.org

Cindy Crane
Chief Executive Officer
DOE FEED Principal Investigator
Enchant Energy
ccrane@enchantenergy.com
www.enchantenergy.com

Robert (Bob) Van Engelenhoven
VP Operations & Development
Enchant Energy Corporation
bobvane@enchantenergy.com
801-557-3919