COST AND PERFORMANCE BASELINE FOR FOSSIL ENERGY PLANTS VOLUME 1: BITUMINOUS COAL AND NATURAL GAS TO ELECTRICITY

September 24, 2019

NETL-PUB-22638

Disclaimer

This report was prepared as an account of work sponsored by an agency of the United States Government. Neither the United States Government nor any agency thereof, nor any of their employees, makes any warranty, express or implied, or assumes any legal liability or responsibility for the accuracy, completeness, or usefulness of any information, apparatus, product, or process disclosed, or represents that its use would not infringe privately owned rights. Reference therein to any specific commercial product, process, or service by trade name, trademark, manufacturer, or otherwise does not necessarily constitute or imply its endorsement, recommendation, or favoring by the United States Government or any agency thereof. The views and opinions of authors expressed therein do not necessarily state or reflect those of the United States Government or any agency thereof.

Author List:

National Energy Technology Laboratory (NETL)
Robert James

Mission Execution and Strategic Analysis (MESA)
Alexander Zoelle, Dale Keairns, Marc Turner, Mark Woods, Norma Kuehn

This report was prepared by MESA for the U.S. DOE NETL. This work was completed under DOE NETL Contract Number DE-FE0025912. This work was performed under MESA Task 201.001.

All images in this report were created by NETL, unless otherwise noted.

The authors wish to acknowledge the excellent guidance, contributions, and cooperation of current and past NETL federal and contractor staff, particularly:

Robert James, NETL Technical Monitor

Kristin Gerdes
Deputy Director (Acting) of Research & Innovation Center

Travis Shultz
Supervisor, Energy Process Analysis Team

John Wimer
Associate Director of Strategic Planning, Science & Technology Strategic Plans & Programs

James Black

Daniel Cicero

Jared Ciferno

Sean Plasynski
Deputy Director and Chief Operating Officer, Laboratory Operations Center

Timothy Fout

Eric Grol

Jeffrey Hoffmann

Julianne Klara

Patrick Le

Michael Matuszewski

Larry Rath

Walter Shelton

Gary Stiegel

William Summers

Thomas J. Tarka, P.E.

Maria Vargas
Supervisor, Natural Gas Team

Vincent Chou

John L. Haslbeck

Aaron Kilstofte

Eric G. Lewis

Pamela Shirley

Michael Rutkowski

Ronald Schoff

Bob Slettehaugh

Mike Sturdivan

Thomas Buchanan

Lora Pinkerton

Vasant Shah

James Simpson

Elsy Varghese

Vladimir Vaysman

Richard Weinstein

DOE Contract Number DE-FE0025912

TABLE OF CONTENTS

List of Exhibits v
Acronyms and Abbreviations xiii
Executive Summary 1
Results Analysis 6
Sensitivities 16
Special Considerations on Reported Costs 18
1 Introduction 20
1.1 Generating Unit Configurations 21
2 General Evaluation Basis 24
2.1 Site Characteristics 24
2.2 Coal Characteristics 27
2.3 Natural Gas Characteristics 28
2.4 Environmental Targets 29
2.4.1 Air Emissions Targets 29
2.4.2 Water Emissions Targets 31
2.4.3 Study Cases 33
2.4.4 Carbon Dioxide 37
2.5 Capacity Factor 37
2.5.1 Capacity Factor Assumptions 37
2.5.2 Existing Plant Data 37
2.5.3 Capacity Factor for Coal Units without Carbon Capture 38
2.5.4 Capacity Factor for IGCC Plants 41
2.5.5 Capacity Factor for NGCC Plants 41
2.5.6 Capacity Factor for Plants with Carbon Capture 41
2.5.7 Perspective 41
2.6 Raw Water Withdrawal and Consumption 42
2.7 Cost Estimating Methodology 43
2.7.1 Capital Costs 45
2.7.2 Operation and Maintenance Costs 49
2.7.3 CO_2 Transport and Storage 51
2.7.4 LCOE and Breakeven CO_2 Sales Price and Emissions Penalty 52
3 Integrated Gasification Combined Cycle Plants 55
3.1 IGCC Common Process Areas 55
3.1.1 Coal Receiving and Storage 56
3.1.2 Air Separation Unit Selection 56
3.1.3 Water Gas Shift Reactors 59
3.1.4 Mercury Removal 60
3.1.5 AGR Process Selection 62
3.1.6 CO_2 Compression and Drying System 66
3.1.7 Sulfur Recovery/Tail Gas Cleanup Process Selection 68
3.1.8 Slag Handling 70

3.1.9 Power Island 71
3.1.10 Steam Generation Island 74
3.1.11 Accessory Electric Plant 78
3.1.12 Process Water Systems 78
3.1.13 Waste Treatment/Miscellaneous Systems 94
3.1.14 Instrumentation and Control 94
3.1.15 Performance Summary Metrics 95
3.2 Shell Global Solutions IGCC Cases 96
3.2.1 Gasifier Background 97
3.2.2 Key System Assumptions 98
3.2.3 Sparing Philosophy 99
3.2.4 Case B1A – Shell IGCC Power Plant Without CO_2 Capture Process Description 100
3.2.5 Case B1A – Performance Results 109
3.2.6 Case B1A – Major Equipment List 120
3.2.7 Case B1A – Cost Estimating 125
3.2.8 Case B1B – Shell IGCC Power Plant with CO_2 Capture 132
3.2.9 Case B1B – Performance Results 140
3.2.10 Case B1B – Major Equipment List 151
3.2.11 Case B1B – Cost Estimating 156
3.3 CB&I E-Gas™ IGCC Cases 163
3.3.1 Gasifier Background 163
3.3.2 Key System Assumptions 164
3.3.3 Sparing Philosophy 166
3.3.4 Case B4A – E-Gas™ IGCC Power Plant Without CO_2 Capture Process Description 166
3.3.5 Case B4A – Performance Results 175
3.3.6 Case B4A – Major Equipment List 187
3.3.7 Case B4A – Cost Estimating 192
3.3.8 Case B4B – E-Gas™ IGCC Power Plant with CO_2 Capture 199
3.3.9 Case B4B – Performance Results 206
3.3.10 Case B4B – Major Equipment List 217
3.3.11 Case B4B – Cost Estimating 223
3.4 General Electric Power IGCC Cases 230
3.4.1 Gasifier Background 231
3.4.2 Key System Assumptions 232
3.4.3 Sparing Philosophy 233
3.4.4 Case B5A – GEP Radiant IGCC Without CO_2 Capture Process Description 233
3.4.5 Case B5A – Performance Results 242
3.4.6 Case B5A – Major Equipment List 254
3.4.7 Case B5A – Cost Estimating 259
3.4.8 Case B5B – GEP Radiant IGCC with CO_2 Capture 266
3.4.9 Case B5B – Performance Results 273
3.4.10 Case B5B – Major Equipment List 284

3.4.11 Case B5B – Cost Estimating 289
3.4.12 Case B5B-Q – GEP Quench IGCC with CO_2 Capture 296
3.4.13 Case B5B-Q – Performance Results 302
3.4.14 Case B5B-Q – Major Equipment List 314
3.4.15 Case B5B-Q – Cost Estimating 319
3.5 IGCC Case Summary 326
4 Pulverized Coal Rankine Cycle Plants 336
4.1 PC Common Process Areas 336
4.1.1 Coal, Activated Carbon, and Sorbent Receiving and Storage 337
4.1.2 Steam Generator and Ancillaries 338
4.1.3 NOx Control System 340
4.1.4 Activated Carbon Injection 341
4.1.5 Particulate Control 341
4.1.6 Mercury Removal 342
4.1.7 Flue Gas Desulfurization 350
4.1.8 Carbon Dioxide Recovery Facility 356
4.1.9 Gas Compression and Drying System 359
4.1.10 Process Water Systems 361
4.1.11 Power Generation 362
4.1.12 Balance of Plant 363
4.1.13 Accessory Electric Plant 367
4.1.14 Instrumentation and Control 368
4.1.15 Performance Summary Metrics 368
4.2 Subcritical PC Cases 369
4.2.1 Key System Assumptions 370
4.2.2 Sparing Philosophy 371
4.2.3 Process Description 372
4.2.4 Case B11A – Performance Results 376
4.2.5 Case B11A – Major Equipment List 383
4.2.6 Case B11A – Cost Estimating 388
4.2.7 Case B11B –SubC PC Unit with CO_2 Capture 394
4.2.8 Case B11B – Performance Results 394
4.2.9 Case B11B – Major Equipment List 407
4.2.10 Case B11B – Cost Estimating 413
4.3 Supercritical PC Cases 420
4.3.1 Key System Assumptions 420
4.3.2 Sparing Philosophy 422
4.3.3 Process Description 422
4.3.4 Case B12A – Performance Results 426
4.3.5 Case B12A – Major Equipment List 433
4.3.6 Case B12A – Cost Estimating 438
4.3.7 Case B12B – SC PC with CO_2 Capture 444
4.3.8 Case B12B – Performance Results 444
4.3.9 Case B12B – Major Equipment List 456

4.3.10 Case B12B – Cost Estimating 462
4.4 PC Case Summary 469
5 Natural Gas Combined Cycle Plants 478
5.1 NGCC Process Areas 478
5.1.1 Natural Gas Supply System 478
5.1.2 Combustion Turbine 478
5.1.3 Heat Recovery Steam Generator 481
5.1.4 NOx Control System 481
5.1.5 Carbon Dioxide Recovery Facility 482
5.1.6 Steam Turbine 483
5.1.7 Water and Steam Systems 484
5.1.8 Accessory Electric Plant 486
5.1.9 Waste Treatment/Miscellaneous Systems 486
5.1.10 Instrumentation and Control 486
5.1.11 Performance Summary Metrics 487
5.2 NGCC Cases 488
5.2.1 Key System Assumptions 488
5.2.2 Sparing Philosophy 490
5.2.3 Process Description 490
5.2.4 Case B31A – Performance Results 493
5.2.5 Case B31A – Major Equipment List 499
5.2.6 Case B31A – Cost Estimating 502
5.2.7 Case B31B – NGCC with CO_2 Capture 508
5.2.8 Case B31B – Performance Results 508
5.2.9 Case B31B – Major Equipment List 518
5.2.10 Case B31B – Cost Estimating 521
5.3 NGCC Case Summary 527
6 Results Analysis 534
6.1 Performance 534
6.1.1 Energy Efficiency 536
6.1.2 Environmental Emissions 540
6.1.3 Water Use 540
6.2 Cost Results 541
6.2.1 TOC and TASC 543
6.2.2 LCOE 545
6.2.3 CO_2 Emission Price Impact 547
6.2.4 CO_2 Sales Price Impact 548
6.3 Sensitivities 550
7 Revision Control 559
8 References 568

LIST OF EXHIBITS

Exhibit ES-1. Case configuration summary 2
Exhibit ES-2. Performance summary and environmental profile for all cases 7
Exhibit ES-3. Net plant efficiency (HHV basis) 8
Exhibit ES-4. Cost summary for all cases 11
Exhibit ES-5. LCOE by cost component 15
Exhibit ES-6. LCOE sensitivity to coal costs 16
Exhibit ES-7. Lowest cost technology options at various natural gas and CO_2 sales prices for NGCC and PC 17
Exhibit ES-8. Lowest cost technology options at various natural gas and CO_2 sales prices for NGCC, PC, and IGCC 18
Exhibit ES-9. Capital cost uncertainty ranges 18
Exhibit 1-1. Case descriptions 23
Exhibit 2-1. Site characteristics 24
Exhibit 2-2. Site ambient conditions 25
Exhibit 2-3. Design makeup water quality 26
Exhibit 2-4. Design coal 27
Exhibit 2-5. Probability distribution of mercury concentration in the Illinois No. 6 coal 28
Exhibit 2-6. Natural gas composition 29
Exhibit 2-7. MATS and NSPS emission limits for SO_2, NOx, PM, Hg, and HCl 30
Exhibit 2-8. New source treated FGD wastewater discharge limits [19] 32
Exhibit 2-9. New source treated gasification wastewater discharge limits [19] 32
Exhibit 2-10. Environmental targets for IGCC cases [15] [16] [17] 33
Exhibit 2-11. Water discharge targets for IGCC cases [19] 34
Exhibit 2-12. Environmental targets for PC cases [15] [16] [17] 35
Exhibit 2-13. Water discharge targets for PC cases [19] 35
Exhibit 2-14. Environmental targets for NGCC cases [15] [16] [17] 36
Exhibit 2-15. Coal unit equivalent availability factor 39
Exhibit 2-16. Number of coal units reporting in the 2011 and 2016 data 39
Exhibit 2-17. Coal unit availability factor 40
Exhibit 2-18. Reported high capacity factor coal units 40
Exhibit 2-19. Capital cost uncertainty ranges 44
Exhibit 2-20. Capital cost levels and their elements 46
Exhibit 2-21. CO_2 transport and storage costs 51
Exhibit 3-1. Typical ASU process schematic 58
Exhibit 3-2. Flow diagram for a conventional single-stage AGR unit 63
Exhibit 3-3. Flow diagram for a conventional two-stage AGR unit 64
Exhibit 3-4. CO_2 compressor interstage pressures 66
Exhibit 3-5. IGCC CO_2 compressor enthalpy versus pressure operating profile 67
Exhibit 3-6. Typical three-stage Claus sulfur plant 69
Exhibit 3-7. State-of-the-art 2008 F-class combustion turbine performance characteristics using natural gas [62] 71
Exhibit 3-8. Typical fuel specification for state-of-the-art 2008 F-class machines 73
Exhibit 3-9. IGCC steam conditions 75
Exhibit 3-10. Example diagram of an ejector type venturi scrubber 79
Exhibit 3-11. Simplified syngas scrubber block flow diagram 80

Exhibit 3-12. Simplified low temperature heat recovery system 81
Exhibit 3-13. Typical operating parameters for sour water strippers 82
Exhibit 3-14. Simplified sour water stripper diagram 83
Exhibit 3-15. Example diagram of a spray tower absorption column 85
Exhibit 3-16. Example diagram of a process water drum 86
Exhibit 3-17. Gasification wastewater quality 87
Exhibit 3-18. Simplified diagram of vacuum flash system 89
Exhibit 3-19. Example diagram of a brine concentrator 91
Exhibit 3-20. Example diagram of a forced-circulation, steam-driven crystallizer 92
Exhibit 3-21. Shell IGCC plant study configuration matrix 98
Exhibit 3-22. Balance of plant assumptions 99
Exhibit 3-23. Case B1A block flow diagram, Shell IGCC without CO_2 capture 101
Exhibit 3-24. Case B1A stream table, Shell IGCC without capture 102
Exhibit 3-25. Case B1A plant performance summary 109
Exhibit 3-26. Case B1A plant power summary 110
Exhibit 3-27. Case B1A air emissions 112
Exhibit 3-28. Case B1A carbon balance 113
Exhibit 3-29. Case B1A sulfur balance 113
Exhibit 3-30. Case B1A water balance 114
Exhibit 3-31. Case B1A overall energy balance (0°C [32°F] reference) 115
Exhibit 3-32. Case B1A coal gasification and ASU energy and mass balance 116
Exhibit 3-33. Case B1A syngas cleanup energy and mass balance 117
Exhibit 3-34. Case B1A combined cycle power generation energy and mass balance 118
Exhibit 3-35. Case B1A total plant cost details 126
Exhibit 3-36. Case B1A owner's costs 130
Exhibit 3-37. Case B1A initial and annual operating and maintenance costs 131
Exhibit 3-38. Case B1A LCOE breakdown 132
Exhibit 3-39. Case B1B block flow diagram, Shell IGCC with CO_2 capture 133
Exhibit 3-40. Case B1B stream table, Shell IGCC with capture 134
Exhibit 3-41. Case B1B plant performance summary 140
Exhibit 3-42. Case B1B plant power summary 141
Exhibit 3-43. Case B1B air emissions 143
Exhibit 3-44. Case B1B carbon balance 144
Exhibit 3-45. Case B1B sulfur balance 144
Exhibit 3-46. Case B1B water balance 144
Exhibit 3-47. Case B1B overall energy balance (0°C [32°F] reference) 145
Exhibit 3-48. Case B1B coal gasification and ASU energy and mass balance 147
Exhibit 3-49. Case B1B syngas cleanup energy and mass balance 148
Exhibit 3-50. Case B1B combined cycle power generation energy and mass balance 149
Exhibit 3-51. Case B1B total plant cost details 157
Exhibit 3-52. Case B1B owner's costs 161
Exhibit 3-53. Case B1B initial and annual operating and maintenance costs 162
Exhibit 3-54. Case B1B LCOE breakdown 163
Exhibit 3-55. E-Gas™ IGCC plant study configuration matrix 165
Exhibit 3-56. Case B4A block flow diagram, E-Gas™ IGCC without CO_2 capture 168
Exhibit 3-57. Case B4A stream table, E-Gas™ IGCC without capture 169
Exhibit 3-58. Case B4A plant performance summary 175

Exhibit 3-59. Case B4A plant power summary 176
Exhibit 3-60. Case B4A air emissions 178
Exhibit 3-61. Case B4A carbon balance 179
Exhibit 3-62. Case B4A sulfur balance 179
Exhibit 3-63. Case B4A water balance 180
Exhibit 3-64. Case B4A overall energy balance (0°C [32°F] reference) 181
Exhibit 3-65. Case B4A coal gasification and ASU energy and mass balance 183
Exhibit 3-66. Case B4A syngas cleanup energy and mass balance 184
Exhibit 3-67. Case B4A combined cycle power generation energy and mass balance 185
Exhibit 3-68. Case B4A total plant cost details 193
Exhibit 3-69. Case B4A owner's costs 197
Exhibit 3-70. Case B4A initial and annual operating and maintenance costs 198
Exhibit 3-71. Case B4A LCOE breakdown 199
Exhibit 3-72. Case B4B block flow diagram, E-Gas™ IGCC with CO_2 capture 200
Exhibit 3-73. Case B4B stream table, E-Gas™ IGCC with capture 201
Exhibit 3-74. Case B4B plant performance summary 207
Exhibit 3-75. Case B4B plant power summary 208
Exhibit 3-76. Case B4B air emissions 209
Exhibit 3-77. Case B4B carbon balance 210
Exhibit 3-78. Case B4B sulfur balance 211
Exhibit 3-79. Case B4B water balance 211
Exhibit 3-80. Case B4B overall energy balance (0°C [32°F] reference) 212
Exhibit 3-81. Case B4B coal gasification and ASU energy and mass balance 214
Exhibit 3-82. Case B4B syngas cleanup energy and mass balance 215
Exhibit 3-83. Case B4B combined cycle power generation energy and mass balance 216
Exhibit 3-84. Case B4B total plant cost details 224
Exhibit 3-85. Case B4B owner's costs 228
Exhibit 3-86. Case B4B initial and annual operating and maintenance costs 229
Exhibit 3-87. Case B4B LCOE breakdown 230
Exhibit 3-88. GEP IGCC plant study configuration matrix 232
Exhibit 3-89. Case B5A block flow diagram, GEP IGCC without CO_2 capture 235
Exhibit 3-90. Case B5A stream table, GEP IGCC without capture 236
Exhibit 3-91. Case B5A plant performance summary 243
Exhibit 3-92. Case B5A plant power summary 244
Exhibit 3-93. Case B5A air emissions 245
Exhibit 3-94. Case B5A carbon balance 246
Exhibit 3-95. Case B5A sulfur balance 246
Exhibit 3-96. Case B5A water balance 247
Exhibit 3-97. Case B5A overall energy balance (0°C [32°F] reference) 248
Exhibit 3-98. Case B5A coal gasification and ASU energy and mass balance 250
Exhibit 3-99. Case B5A syngas cleanup energy and mass balance 251
Exhibit 3-100. Case B5A combined cycle power generation energy and mass balance 252
Exhibit 3-101. Case B5A total plant cost details 260
Exhibit 3-102. Case B5A owner's costs 264
Exhibit 3-103. Case B5A initial and annual operating and maintenance costs 265
Exhibit 3-104. Case B5A LCOE breakdown 266

Exhibit 3-105. Case B5B block flow diagram, GEP IGCC with CO_2 capture 267
Exhibit 3-106. Case B5B stream table, GEP IGCC with capture 268
Exhibit 3-107. Case B5B plant performance summary 273
Exhibit 3-108. Case B5B plant power summary 274
Exhibit 3-109. Case B5B air emissions 276
Exhibit 3-110. Case B5B carbon balance 277
Exhibit 3-111. Case B5B sulfur balance 277
Exhibit 3-112. Case B5B water balance 277
Exhibit 3-113. Case B5B overall energy balance (0°C [32°F] reference) 278
Exhibit 3-114. Case B5B coal gasification and ASU energy and mass balance 280
Exhibit 3-115. Case B5B syngas cleanup energy and mass balance 281
Exhibit 3-116. Case B5B combined cycle power generation energy and mass balance 282
Exhibit 3-117. Case B5B total plant cost details 290
Exhibit 3-118. Case B5B owner's costs 294
Exhibit 3-119. Case B5B initial and annual operating and maintenance costs 295
Exhibit 3-120. Case B5B LCOE breakdown 296
Exhibit 3-121. Case B5B-Q block flow diagram, GEP quench-only IGCC with CO_2 capture 297
Exhibit 3-122. Case B5B-Q stream table, GEP quench-only IGCC with capture 298
Exhibit 3-123. Case B5B-Q plant performance summary 303
Exhibit 3-124. Case B5B-Q plant power summary 304
Exhibit 3-125. Case B5B-Q air emissions 305
Exhibit 3-126. Case B5B-Q carbon balance 306
Exhibit 3-127. Case B5B-Q sulfur balance 307
Exhibit 3-128. Case B5B-Q water balance 307
Exhibit 3-129. Case B5B-Q overall energy balance (0°C [32°F] reference) 308
Exhibit 3-130. Case B5B-Q coal gasification and ASU energy and mass balance 310
Exhibit 3-131. Case B5B-Q syngas cleanup energy and mass balance 311
Exhibit 3-132. Case B5B-Q combined cycle power generation energy and mass balance 312
Exhibit 3-133. Case B5B-Q total plant cost details 320
Exhibit 3-134. Case B5B-Q owner's costs 324
Exhibit 3-135. Case B5B-Q initial and annual operating and maintenance costs 325
Exhibit 3-136. Case B5B-Q LCOE breakdown 326
Exhibit 3-137. Estimated performance results for all IGCC cases 326
Exhibit 3-138. Net plant efficiency (HHV basis) for all IGCC cases 328
Exhibit 3-139. Plant capital cost for all IGCC cases 329
Exhibit 3-140. LCOE for all IGCC cases 331
Exhibit 3-141. Breakeven CO_2 sales price and emissions penalty for IGCC cases 332
Exhibit 3-142. Raw water withdrawal and consumption in IGCC cases 333
Exhibit 4-1. Effect of SO_3 concentration on PAC injection rate 344
Exhibit 4-2. Pollutant removal efficiency versus hydrated lime injection rate 345
Exhibit 4-3. Typical DSI injection process flow diagram 346
Exhibit 4-4. Mercury removal versus PAC injection rate for Case B12A 347
Exhibit 4-5. Typical ACI injection process flow diagram 349
Exhibit 4-6. Typical disposal- and commercial-grade gypsum characteristics and limits 350

Exhibit 4-7. Wet flue gas desulfurization process flow diagram 351
Exhibit 4-8. Cross section of the wet FGD absorber tower 352
Exhibit 4-9. FGD process wastewater quality 355
Exhibit 4-10. Cansolv CO_2 capture process typical flow diagram for PC 357
Exhibit 4-11. CO_2 compressor interstage pressures 359
Exhibit 4-12. PC CO_2 compressor enthalpy versus pressure operating profile 360
Exhibit 4-13. Spray dryer block flow diagram 362
Exhibit 4-14. PC steam conditions 363
Exhibit 4-15. SubC PC plant study configuration matrix 370
Exhibit 4-16. Balance of plant assumptions 371
Exhibit 4-17. Case B11A block flow diagram, SubC unit without CO_2 capture 373
Exhibit 4-18. Case B11A stream table, SubC unit without capture 374
Exhibit 4-19. Case B11A plant performance summary 376
Exhibit 4-20. Case B11A plant power summary 377
Exhibit 4-21. Case B11A air emissions 378
Exhibit 4-22. Case B11A carbon balance 379
Exhibit 4-23. Case B11A sulfur balance 379
Exhibit 4-24. Case B11A water balance 380
Exhibit 4-25. Case B11A energy and mass balance, SubC PC boiler without CO_2 capture 381
Exhibit 4-26. Case B11A energy and mass balance, SubC steam cycle 382
Exhibit 4-27. Case B11A overall energy balance (0°C [32°F] reference) 383
Exhibit 4-28. Case B11A total plant cost details 389
Exhibit 4-29. Case B11A owner's costs 392
Exhibit 4-30. Case B11A initial and annual operating and maintenance costs 393
Exhibit 4-31. Case B11A LCOE breakdown 394
Exhibit 4-32. Case B11B block flow diagram, SubC unit with CO_2 capture 395
Exhibit 4-33. Case B11B stream table, SubC unit with capture 396
Exhibit 4-34. Case B11B plant performance summary 399
Exhibit 4-35. Case B11B plant power summary 400
Exhibit 4-36. Case B11B air emissions 401
Exhibit 4-37. Case B11B carbon balance 402
Exhibit 4-38. Case B11B sulfur balance 402
Exhibit 4-39. Case B11B water balance 403
Exhibit 4-40. Case B11B energy and mass balance, SubC PC boiler with CO_2 capture 404
Exhibit 4-41. Case B11B energy and mass balance, SubC steam cycle 405
Exhibit 4-42. Case B11B overall energy balance (0°C [32°F] reference) 407
Exhibit 4-43. Case B11B total plant cost details 414
Exhibit 4-44. Case B11B owner's costs 418
Exhibit 4-45. Case B11B initial and annual operating and maintenance costs 419
Exhibit 4-46. Case B11B LCOE breakdown 420
Exhibit 4-47. SC PC plant study configuration matrix 421
Exhibit 4-48. Case B12A block flow diagram, SC unit without CO_2 capture 423
Exhibit 4-49. Case B12A stream table, SC unit without capture 424
Exhibit 4-50. Case B12A plant performance summary 426
Exhibit 4-51. Case B12A plant power summary 427
Exhibit 4-52. Case B12A air emissions 428
Exhibit 4-53. Case B12A carbon balance 429

Exhibit 4-54. Case B12A sulfur balance 429
Exhibit 4-55. Case B12A water balance 430
Exhibit 4-56. Case B12A energy and mass balance, SC PC boiler without CO_2 capture 431
Exhibit 4-57. Case B12A energy and mass balance, SC steam cycle 432
Exhibit 4-58. Case B12A overall energy balance (0°C [32°F] reference) 433
Exhibit 4-59. Case B12A total plant cost details 439
Exhibit 4-60. Case B12A owner's costs 442
Exhibit 4-61. Case B12A initial and annual operating and maintenance costs 443
Exhibit 4-62. Case B12A LCOE breakdown 444
Exhibit 4-63. Case B12B block flow diagram, SC unit with CO_2 capture 445
Exhibit 4-64. Case B12B stream table, SC unit with capture 446
Exhibit 4-65. Case B12B plant performance summary 449
Exhibit 4-66. Case B12B plant power summary 450
Exhibit 4-67. Case B12B air emissions 451
Exhibit 4-68. Case B12B carbon balance 452
Exhibit 4-69. Case B12B sulfur balance 452
Exhibit 4-70. Case B12B water balance 453
Exhibit 4-71. Case B12B energy and mass balance, SC PC boiler with CO_2 capture 454
Exhibit 4-72. Case B12B energy and mass balance, SC steam cycle 455
Exhibit 4-73. Case B12B overall energy balance (0°C [32°F] reference) 456
Exhibit 4-74. Case B12B total plant cost details 463
Exhibit 4-75. Case B12B owner's costs 467
Exhibit 4-76. Case B12B initial and annual operating and maintenance costs 468
Exhibit 4-77. Case B12B LCOE breakdown 469
Exhibit 4-78. Estimated performance and cost results for PC cases 469
Exhibit 4-79. Plant capital cost for PC cases 471
Exhibit 4-80. LCOE for PC cases 472
Exhibit 4-81. Sensitivity of LCOE to capacity factor for PC cases 473
Exhibit 4-82. Sensitivity of LCOE to coal price for PC cases 474
Exhibit 4-83. Breakeven CO_2 sales price and emissions penalty in PC cases 475
Exhibit 4-84. Raw water withdrawal and consumption in PC cases 476
Exhibit 5-1. Combustion turbine typical scope of supply 479
Exhibit 5-2. F- versus H-class combustion turbines 480
Exhibit 5-3. Cansolv CO_2 capture process typical flow diagram for NGCC 483
Exhibit 5-4. NGCC steam conditions 484
Exhibit 5-5. NGCC plant study configuration matrix 488
Exhibit 5-6. NGCC balance of plant assumptions 489
Exhibit 5-7. Case B31A block flow diagram, NGCC without CO_2 capture 491
Exhibit 5-8. Case B31A stream table, NGCC without capture 492
Exhibit 5-9. Case B31A plant performance summary 493
Exhibit 5-10. Case B31A plant power summary 494
Exhibit 5-11. Case B31A air emissions 494
Exhibit 5-12. Case B31A carbon balance 495
Exhibit 5-13. Case B31A sulfur balance 495
Exhibit 5-14. Case B31A water balance 496
Exhibit 5-15. Case B31A energy and mass balance, NGCC without CO_2 capture 497
Exhibit 5-16. Case B31A overall energy balance (0°C [32°F] reference) 499

Exhibit 5-17. Case B31A total plant cost details 503
Exhibit 5-18. Case B31A owner's costs 506
Exhibit 5-19. Case B31A initial and annual operating and maintenance costs 507
Exhibit 5-20. Case B31A LCOE breakdown 508
Exhibit 5-21. Case B31B block flow diagram, NGCC with CO_2 capture 509
Exhibit 5-22. Case B31B stream table, NGCC with capture 510
Exhibit 5-23. Case B31B plant performance summary 512
Exhibit 5-24. Case B31B plant power summary 513
Exhibit 5-25. Case B31B air emissions 513
Exhibit 5-26. Case B31B carbon balance 514
Exhibit 5-27. Case B31B sulfur balance 515
Exhibit 5-28. Case B31B water balance 515
Exhibit 5-29. Case B31B energy and mass balance, NGCC with CO_2 capture 516
Exhibit 5-30. Case B31B overall energy balance (0°C [32°F] reference) 518
Exhibit 5-31. Case B31B total plant cost details 522
Exhibit 5-32. Case B31B owner's costs 525
Exhibit 5-33. Case B31B initial and annual operating and maintenance costs 526
Exhibit 5-34. Case B31B LCOE breakdown 527
Exhibit 5-35. Estimated performance and cost results for NGCC cases 527
Exhibit 5-36. Plant capital cost for NGCC cases 529
Exhibit 5-37. LCOE of NGCC cases 530
Exhibit 5-38. Sensitivity of LCOE to capacity factor in NGCC cases 531
Exhibit 5-39. Sensitivity of LCOE to fuel price in NGCC cases 531
Exhibit 5-40. Breakeven CO_2 sales price and emissions penalty in NGCC cases 532
Exhibit 5-41. Raw water withdrawal and consumption in NGCC cases 533
Exhibit 6-1. Performance summary and environmental profile for all cases 535
Exhibit 6-2. Net plant efficiency (HHV basis) 536
Exhibit 6-3. GEP IGCC Sankey diagram with and without CO_2 capture 537
Exhibit 6-4. SC PC Sankey diagram with and without CO_2 capture 538
Exhibit 6-5. NGCC Sankey diagram with and without CO_2 capture 539
Exhibit 6-6. Raw water withdrawal and consumption 541
Exhibit 6-7. Cost summary for all cases 542
Exhibit 6-8. Plant capital costs 544
Exhibit 6-9. LCOE by cost component 546
Exhibit 6-10. Impact of carbon emissions price on study technologies 547
Exhibit 6-11. Lowest cost power generation options comparing NGCC and PC 548
Exhibit 6-12. Impact of carbon sales price on study technologies 549
Exhibit 6-13. Lowest cost power generation options comparing NGCC and coal 550
Exhibit 6-14. LCOE sensitivity to fuel costs 551
Exhibit 6-15. LCOE sensitivity to capacity factor 552
Exhibit 6-16. LCOE sensitivity to debt-to-equity ratio 553
Exhibit 6-17. BSP or BEP sensitivity to debt-to-equity ratio 553
Exhibit 6-18. LCOE sensitivity to effective tax rate 554
Exhibit 6-19. BSP or BEP sensitivity to effective tax rate 554
Exhibit 6-20. LCOE sensitivity to interest rate on debt 556
Exhibit 6-21. BSP or BEP sensitivity to interest rate on debt 556
Exhibit 6-22. LCOE sensitivity to return on equity 557
Exhibit 6-23. BSP or BEP sensitivity to return on equity 557

Exhibit 6-24. LCOE sensitivity to combined financial parameters 558
Exhibit 7-1. Record of revisions 559

ACRONYMS AND ABBREVIATIONS

AACE	Association for the Advancement of Cost Engineering
AC	Alternating current
acfm	Actual cubic feet per minute
ACI	Activated carbon injection
ADIP	Aqueous di-isopropanol
AF	Availability factor
AGR	Acid gas removal
ANSI	American National Standards Institute
Ar	Argon
Aspen	Aspen Plus®
ASU	Air separation unit
atm	Atmosphere (14.696 psi)
BACT	Best Available Control Technology
BDL	Blowdown losses
BEC	Bare erected cost
BEP	Breakeven emissions penalty
BFD	Block flow diagram
BFW	Boiler feedwater
BOP	Balance of plant
BSP	Breakeven sales price
Btu	British thermal unit
Btu/hr	British thermal units per hour
Btu/kWh	British thermal units per kilowatt hour
Btu/lb	British thermal units per pound
Btu/scf	British thermal units per standard cubic foot
$CaCO_3$	Calcium carbonate
$CaSO_4$	Calcium sulfate
CB&I	Chicago Bridge & Iron Company
CCS	Carbon capture and sequestration
CCS	Carbon capture and storage
CDR	Carbon dioxide recovery
CF	Capacity factor
CFR	Code of Federal Regulations
CGCU	Cold gas cleanup
CGE	Cold gas efficiency
CH_4	Methane
CH_4S	Methanethiol
Cl^-	Chloride ion
CL	Closed-loop
cm	Centimeter
CO	Carbon monoxide
CO_2	Carbon dioxide
COE	Cost of electricity
COS	Carbonyl sulfide
CS	Carbon steel
CT	Combustion turbine
CTG	Combustion turbine-generator
CWP	Circulating water pump
CWR	Cooling water return
CWS	Circulating water system
CWT	Cold water temperature
db, DB	Dry basis
DBQ	Dry Bottom Quench
DC	Direct current
DCS	Distributed control system
DI	De-ionized
DIPA	Diisopropanolamine
DLN	Dry low NOx
DME	Di-methyl ether
DOE	Department of Energy
DSC	Dry Syngas Cooler
DSI	Dry sorbent injection
E-Gas™	CB&I gasifier technology
EAF	Equivalent availability factor
EGU	Electric utility steam generating unit
ELG	Effluent Limitation Guidelines
EMF	Emission modification factors
Eng'g CM H.O.& Fee	Engineering, construction management, home office and fees
EOR	Enhanced oil recovery
EPA	Environmental Protection Agency
EPC	Engineering, procurement and construction
EPCC	Engineering, procurement and construction cost
EPRI	Electric Power Research Institute

ESP	Electrostatic precipitator
ESPA	Energy Sector Planning and Analysis
FD	Forced draft
FE	Fossil Energy
FG	Flue gas
FGD	Flue gas desulfurization
FRP	Fiberglass-reinforced plastic
FSQ	Full-slurry quench
ft	Foot, feet
ft^3	Cubic feet
FW	Feedwater
GADS	Generating Availability Data System
gal	Gallon
GDP	Gross domestic product
GEP	General Electric Power
GJ	Gigajoule
GJ/hr	Gigajoules per hour
gpd	Gallons per day
gpm	Gallons per minute
gr/100 scf	Grains per one hundred standard cubic feet
Gt	Gigatonne
h, hr	Hour
H_2	Hydrogen
H_2O	Water
H_2S	Hydrogen sulfide
HCl	Hydrochloric acid
HCO_3	Bicarbonate
HDPE	High density polyethylene
Hg	Mercury
HHV	Higher heating value
hp	Horsepower
HP	High pressure
HRSG	Heat recovery steam generator
HSS	Heat stable salt
HVAC	Heating, ventilating, and air conditioning
HWT	Hot water temperature
HX	Heat exchanger
Hz	Hertz
I&C	Instrumentation and control
ICR	Information Collection Request
ID	Induced draft
IGCC	Integrated gasification combined cycle
IGV	Inlet guide vane
in.	Inch
in. Hg	Inch mercury
IOU	Investor-owned utility
IP	Intermediate pressure
IPM	Integrated Planning Model
IRROE	Internal rate of return on equity
ISO	International Organization for Standardization
kg/GJ	Kilograms per gigajoule
kg/hr	Kilograms per hour
kg/s	Kilograms per second
kgmol	Kilogram mole
kgmol/hr	Kilogram moles per hour
kJ	Kilojoule
kJ/hr	Kilojoules per hour
kJ/kg	Kilojoules per kilogram
kJ/m^3	Kilojoules per cubic meter
kJ/Nm^3	Kilojoules per normal cubic meter
km	Kilometer
KO	Knockout
kV	Kilovolt
kW, kWe	Kilowatt electric
kWh	Kilowatt-hour
kWt	Kilowatt thermal
LAER	Lowest Achievable Emission Rate
lb	Pound
lb/gal	Pound per gallon
lb/ft^2	Pounds per square foot
lb/ft^3	Pounds per cubic foot
lb/hr	Pounds per hour
lb/MMBtu	Pounds per million British thermal units
lb/MWh	Pounds per megawatt hour
lb/s	Pounds per second
lb/TBtu	Pounds per trillion British thermal units
lbmol/hr	Pound moles per hour
LCOE	Levelized cost of electricity
LCV	Low calorific value
LHV	Lower heating value
LIW	Loss-in-weight

LNB	Low NOx burner
LP	Low pressure
lpm	Liters per minute
LTHR	Low temperature heat recovery
m	Meter
M	Thousand
m/min	Meters per minute
m^3/min	Cubic meters per minute
MAC	Main air compressor
MAF	Moisture and ash free
MATS	Mercury and Air Toxics Standards
MCR	Maximum continuous rate
MDEA	Methyldiethanolamine
MEA	Monoethanolamine
MESA	Mission Execution and Strategic Analysis
mi	Mile
MJ/Nm^3	Megajoules per normal cubic meter
MJ/scm	Megajoule per standard cubic meter
mm	Millimeter
MM	Million
MMacf	Million actual cubic feet
MMBtu	Million British thermal units
MMBtu/hr	Million British thermal units per hour
MNQC	Multi Nozzle Quiet Combustor
mol%	Percent by mole
MPa	Megapascal
MVA	Mega volt-amps
MW	Megawatt
MWe	Megawatt electric
MWh	Megawatt-hour
N_2	Nitrogen
N/A	Not applicable
NaCl	Sodium chloride
NaOH	Sodium hydroxide
NEMA	National Electrical Manufacturers Association
NERC	North American Electric Reliability Council
NETL	National Energy Technology Laboratory
NFPA	National Fire Protection Association
NG	Natural gas
NGCC	Natural gas combined cycle
NH_3	Ammonia
NH_4Cl	Ammonium chloride
Nm^3	Normal cubic meter
Nm^3/hr	Normal cubic meter per hour
NOAK	N^{th}-of-a-kind
NOx	Oxides of nitrogen
NSPS	New Source Performance Standards
NSR	New Source Review
NTU	Nephelometric turbidity unit
O_2	Oxygen
O&M	Operation and maintenance
OEM	Original equipment manufacturers
OFA	Overfire air
O-H, OH	Overhead
OP/VWO	Over pressure/valve wide open
PA	Primary air
PAC	Powdered activated carbon
PC	Pulverized coal
p.f.	Power factor
ph	Phase
pH	Power of hydrogen
PM	Particulate matter
POTW	Publicly-owned treatment works
ppb	Parts per billion
ppm	Parts per million
ppmv	Parts per million volume
ppmvd	Parts per million volume, dry
ppmw	Parts per million weight
ppmwd	Parts per million weight, dry
ppt	Parts per trillion
PRB	Powder River Basin
PSD	Prevention of Significant Deterioration
psi	Pounds per square inch
psia	Pound per square inch absolute
psid	Pound per square inch differential
psig	Pound per square inch gage

QGESS	Quality Guidelines for Energy System Studies
R&D	Research and development
R+Q	Radiant plus quench
RD&D	Research, development, and demonstration
RH	Reheater
RO	Reverse osmosis
RR	Ramp rate
SC	Supercritical
SC PC	Supercritical pulverized coal
scfh	Standard cubic feet per hour
scfm	Standard cubic feet per minute
Sch.	Schedule
SCOT	Shell Claus Off-gas Treating
SCR	Selective catalytic reduction process or equipment
SDA	Spray dryer absorber
SDE	Spray dryer evaporator
SGC	Synthesis gas cooler
Shell	Shell Global Solutions
SNCR	Selective non-catalytic reduction
SNG	Synthetic natural gas
SO_2	Sulfur dioxide
SO_3	Sulfur trioxide
SRU	Sulfur recovery unit
SS	Stainless steel
STG	Steam turbine generator
SubC PC	Subcritical pulverized coal
SWS	Sour water stripper
T&S	Transport and storage
TASC	Total as-spent cost
TDS	Total dissolved solids
TEG	Triethylene glycol
TEWAC	Totally Enclosed Water-to-Air Cooled
TG	Tail gas
TGTU	Tail gas treating unit
TOC	Total overnight cost
tonne	Metric ton (1,000 kg)
TPC	Total plant cost
tpd	Ton per day
tph	Tons per hour
U.S.	United States
UCC	United Conveyor Corporation
USC	Ultra-supercritical
V	Volt
V-L	Vapor liquid portion of stream (excluding solids)
vol%	Percent by volume
VT	Voltage transformers
WGS	Water gas shift
wt%	Percent by weight
yr	Year
ZLD	Zero liquid discharge
$/GJ	Dollars per gigajoule
$/kW	Dollars per kilowatt
$/MMBtu	Dollars per million British thermal units
$M	Millions of dollars
µS/cm	Micro Siemens per cm
°C	Degrees Celsius
°F	Degrees Fahrenheit
5-10s	50-hour work week

This page intentionally blank

EXECUTIVE SUMMARY

This report presents an independent assessment of the cost and performance of select fossil energy power systems - integrated gasification combined cycle (IGCC), pulverized coal (PC), and natural gas combined cycle (NGCC) plants - using a systematic, transparent technical and economic approach. This is Volume 1 of a four-volume series, comprised of the following reports:

- Volume 1: Bituminous Coal and Natural Gas to Electricity
- Volume 2: Coal to Synthetic Natural Gas and Ammonia (Various Coal Ranks)
- Volume 3: Low Rank Coal and Natural Gas to Electricity
- Volume 4: Bituminous Coal to Liquid Fuels

The cost and performance of fossil fuel-based generation technologies represented in this report (and the series at large) are important inputs to assessments and determinations of technology combinations to be utilized to meet the projected demands of future power markets. In addition to informing technology comparisons, the reference plant configurations found in this report provide perspective for regulators and policy makers. From a research & development perspective, this report is used to assess goals and metrics and to provide a consistent basis for comparing developing technologies.

Thirteen power plant configurations are analyzed in this report. A summary of the configurations is shown in Exhibit ES-1:

- Seven IGCC configurations—two Shell Global Solutions (Shell) gasifiers (with and without carbon dioxide [CO_2] capture), two Chicago Bridge and Iron (CB&I) E-Gas™ full-slurry quench (FSQ) gasifiers (with and without CO_2 capture), and three General Electric Power (GEP) gasifiers (one without [radiant] and two with [one radiant and one quench] CO_2 capture), all with two state-of-the-art 2008 F-Class combustion turbines
- Four PC power plant configurations—two subcritical (SubC) and two supercritical (SC) (with and without CO_2 capture)
- Two state-of-the-art 2017 F-Class combustion turbine-based NGCC power plant configurations (with and without CO_2 capture)

All plant configurations were evaluated based on installation at a greenfield site. Capacity factors (CFs) utilized were 80 percent for all IGCC configurations, and 85 percent for all PC and NGCC configurations. Availability is defined as the percent of time during a specific period that a generating unit is capable of producing electricity. This report assumes that each new plant would be dispatched any time it is available and would be capable of generating the nameplate capacity when online. Therefore, CF and availability are equal. The calculations assume that the CF and availability are constant over the life of the plant. These plants are considered to be built for a thirty-year life, are well-maintained plants with sufficient and adequate maintenance

Exhibit ES-1. Case configuration summary

Case[A]	Plant Type	Steam Cycle, psig/°F/°F	Combustion Turbine	Gasifier/Boiler Technology	H_2S Separation	Sulfur Removal	PM Control	CO_2 Separation[D]	Process Water Treatment
B1A	IGCC	1800/1050/1050	2 x State-of-the-art 2008 F-Class[B]	Shell	Sulfinol-M	Claus Plant/Sulfur	Cyclone, candle filter, and water scrubber	N/A	Vacuum flash, brine concentrator, crystallizer
B1B		1800/1000/1000			Selexol			Selexol 2nd stage	
B4A		1800/1050/1050		CB&I E-Gas™	Refrigerated MDEA			N/A	
B4B		1800/1000/1000			Selexol			Selexol 2nd stage	
B5A		1800/1050/1050		GEP Radiant	Selexol		Quench, water scrubber, and AGR adsorber	N/A	
B5B		1800/1000/1000			Selexol			Selexol 2nd stage	
B5B-Q		1800/1000/1000		GEP Quench	Selexol			Selexol 2nd stage	
B11A	PC	2400/1050/1050	N/A	SubC PC	N/A	Wet FGD/ Gypsum	Baghouse	N/A	Spray dryer evaporator
B11B								Cansolv	
B12A		3500/1100/1100		SC PC[C]				N/A	
B12B								Cansolv	
B31A	NGCC	2400/1085/1085	2 x State-of-the-art 2017 F-Class	HRSG	N/A	N/A	N/A	N/A	N/A
B31B								Cansolv	

[A]All plants in this report are assumed to be located at a generic plant site in the midwestern United States
[B]The IGCC F-class combustion turbines represent the same technology considered in the previous version of this report. There have not been significant recent advances in high-H_2 syngas turbine technology; consequently, these turbines are still considered state-of-the-art.
[C]While labeled as SC conditions, the SC steam cycle conditions utilized in this report are also generally representative of commercial plants characterized as ultra-supercritical (USC), particularly with respect to temperature (593°C [1,100°F]). Because efficiency is more sensitive to steam cycle temperature than pressure, the resulting performance is at or near that of top-performing commercially-available USC PC plants.
[D]All IGCC cases have a nominal 90 percent removal rate based on the total feedstock minus unburned carbon in slag. All PC and NGCC cases have a nominal 90 percent removal rate based on the total feedstock minus unburned carbon in ash (PC cases). The rate of CO_2 capture from the flue gas in the Cansolv systems and from syngas in the Selexol systems varies. An explanation for the difference is provided in Section 2.4.4. All cases sequester the CO_2 offsite.

budgets, and are operated in a manner that supports the assumed CF. Achieving such CFs would require that these plants be near the top of the dispatch list.

The combustion turbines (CTs) used in each of the IGCC and NGCC configurations are manufactured in discrete sizes, with each of the configurations assuming combustion turbine operation at its rated output. While the output of the combustion turbines is consistent between configurations within a technology type, the IGCC cases have net outputs ranging from 499 (Case B5B-Q) to 641 MW (Case B4A). The range in IGCC net output is caused by the significant auxiliary load imposed in the CO_2 capture cases—primarily due to CO_2 compression—and the need for steam for CO_2 capture and the water gas shift (WGS) reactions, which reduces steam turbine output. The output in NGCC cases varies from 646 MW (with capture) to 727 MW (without capture). The nominal net plant output for all PC plants in this study is 650 MW, which represents an increase over the 550 MW reflected in Revision 3 of this report. The reason for this change is to bring the PC output to a more comparable output level with the NGCC cases, and to be more consistent with recent commercial history. The boiler and steam turbine industry's ability to match unit size to a custom specification has been commercially demonstrated enabling a common net output comparison of the PC cases, and a common net output comparison of the PC cases and NGCC cases with CO_2 capture. The coal feed rate was increased in the CO_2 capture cases to increase the gross steam turbine output and account for the higher auxiliary load as well as the required extraction steam, to produce the desired net output.

Air pollution control devices for all technologies are designed to meet the limits of the February 2013 update to the New Source Performance Standards (NSPS) for sulfur dioxide (SO_2), nitrogen oxide (NOx), and particulate matter (PM), and the March 2013 update to the Utility Mercury and Air Toxics Standards (MATS) for mercury (Hg) and hydrochloric acid (HCl). Liquid waste streams are regulated by the November 2015 update to the Effluent Limitation Guidelines (ELG), and all plants in the study are in compliance.

For the IGCC cases, hydrogen sulfide (H_2S) is separated with an acid gas removal (AGR) process and converted to elemental sulfur in a Claus plant with tail gas recycle to limit SO_2 stack emissions; COS hydrolysis is employed in non-capture cases, but not in capture cases where WGS is used; NOx formation is minimized with low NOx burners (LNBs) and nitrogen (N_2) dilution, and where required, syngas humidification; PM is controlled with a combination of water quench, syngas scrubber, cyclone, and/or candle filter, depending on the gasifier technology; Hg is controlled with dual sulfur-impregnated carbon beds; HCl is primarily removed in the syngas scrubber with the remainder removed with the low temperature heat recovery condensate. HCl is removed from the syngas scrubber effluent with a brine concentrator and crystallizer.

For the PC cases, SO_2, NOx, PM, Hg, and HCl are actively controlled with wet flue gas desulfurization (FGD), LNBs with overfire air (OFA) and selective catalytic reduction (SCR), a baghouse, dry sorbent injection (DSI) and activated carbon injection (ACI), and a spray dryer evaporator to treat FGD blowdown, respectively.

For NGCC cases, NOx is controlled with LNBs and an SCR.

All power plant configurations with carbon capture are designed to achieve 90 percent capture, resulting in atmospheric CO_2 emissions at levels far below the proposed Environmental Protection Agency (EPA) regulation.[a]

This revision reflects varying degrees of updated technology vendor input. For IGCC plants, updates were implemented for the air separation unit (ASU), steam cycle, syngas scrubber, WGS reactors, carbonyl sulfide (COS) hydrolysis reactors, low temperature heat recovery (LTHR) process, ammonia scrubber, sour water strippers (SWSs), syngas humidification, Selexol AGR, CO_2 compressors, and process water treatment systems[b]. For PC plants, the pollution control equipment, process water treatment systems[b], CO_2 capture and compression systems, and steam turbines were updated. For NGCC plants, updates were made to the CO_2 capture and compression systems, combustion turbines, and steam turbines. However, the final assessment of performance and cost was determined independently by NETL and is not endorsed by the individual vendors.

To ensure methodologically-sound, consistent, and transparent technology assessments and comparisons, NETL relies upon its Quality Guidelines for Energy System Studues (QGESS) reports, which provide guidance on topics ranging from recommended feedstock specifications and pricing, [1] [2] recommendations for performance modeling assumptions, [3] and guidance for cost estimation methodology. [4]

The methodology for developing the performance results presented in this report included performing steady-state simulations of the power plant configurations at the nameplate rating using the Aspen Plus® (Aspen) process modeling software. The major plant equipment performance and process limits were based on published reports, information obtained from vendors and users of the technology, performance data from design/build utility projects, and/or best engineering judgment. [3] Mass and energy balance data from the Aspen models were used to size major pieces of equipment, which formed the basis for developing the cost estimates presented.

The capital and operating costs for the major equipment and plant sub-systems were estimated by Black & Veatch based on the simulation results using an in-house database, legacy plant estimates, and conceptual estimating models. The cost results were further calibrated using a combination of adjusted vendor-furnished data and scaled estimates from previous design/build projects. The cost results are reported in 2018 dollars.

---

[a] EPA promulgated an NSPS on October 23, 2015, for emissions of CO_2 for new fossil fuel-fired electric utility generating units. [27] The limit set by the regulation was 1,000 lb-CO_2/MWh-gross for NGCC, and 1,400 lb-CO_2/MWh-gross for PC and IGCC plants. As of the publication of this report, the EPA has proposed changes that increase the CO_2 emissions limit for the PC and IGCC plants considered in this study to 1,900 lb-CO_2/MWh-gross. [126] [28] These changes do not impact the previously established emissions limit for NGCC plants.

[b] One of the design objectives of this study was to present IGCC and PC plants that are compliant with the ELG rule. Under the assumptions of this study, blowdown from both the steam cycle and cooling tower are exempt, provided that no process wastewater is utilized as makeup to either of these systems.

The methodology in which water discharged to local waterways is eliminated is referred to as zero liquid discharge (ZLD). For the purposes of this study, purification and recycling systems were selected for IGCC cases as the means to achieve ZLD, with the process water treatment systems upgraded to include a vacuum flash, brine concentrator, and crystallizer. PC cases with CO_2 capture do not qualify as ZLD under the ZLD definition in this study.

The baseline fuel cost for this analysis is specified in the 2019 revision of the QGESS report on "Fuel Prices for Selected Feedstocks in National Energy Technology Laboratory [NETL] Studies." [5] The levelized price for Illinois No. 6 coal delivered to the Midwest is $2.11/GJ ($2.23/MMBtu), on a higher heating value (HHV) basis and in 2018 United States (U.S.) dollars. The levelized price for natural gas delivered to the Midwest is $4.19/GJ ($4.42/MMBtu), on an HHV basis and in 2018 U.S. dollars.

The cost metric used in this report is the levelized cost of electricity (LCOE) reported in real 2018 dollars, which is the revenue that must be received by the generator per net MWh produced to meet the desired return on equity after meeting all debt and tax obligations and operating expenses. Detailed information pertaining to LCOE calculations is available in the 2019 revision of the QGESS report "Cost Estimation Methodology for NETL Assessment of Power Plant Performance." [4] The cost of CO_2 transport and storage (T&S), on an equivalent dollar per MWh basis, is added to the LCOE and represents a 62 km (100 mile) CO_2 pipeline and storage in a deep saline formation in the Midwest.[c] On a unit basis, the cost of CO_2 T&S applied is $10 per tonne ($9/ton) of CO_2.

The LCOE results shown for the cases considered in this study are not intended to reflect all the potential market pressures experienced by plants operating today, or the price consumers can expect to pay. Rather, the primary focus is on a sound, transparent, consistent methodology to develop those results, built with industry and vendor input, which ultimately leads to an independent benchmark for the cases considered. This outcome is of significant value to internal and external stakeholders.

Selection of new generation technologies will depend on many factors, including:

- Capital and operating costs
- Overall energy efficiency
- Operational flexibility (e.g., ramp rate, turndown, start-up time)
- Fuel prices
- Project financial requirements
- Availability, reliability, and environmental performance
- Current and potential regulations governing air, water, and solid waste discharges from fossil-fueled power plants
- Specific site and application constraints and requirements
- Market penetration of clean coal technologies that have matured and improved as a result of commercial-scale demonstrations under the Department of Energy's (DOE) Clean Coal and Carbon Management Program

[c] Estimated using the Office of Fossil Energy (FE)/NETL CO_2 Transport Cost Model and the FE/NETL CO_2 Saline Storage Cost Model. Additional detail on development of these costs is available in the 2019 revision of the QGESS report "Carbon Dioxide Transport and Storage Costs in NETL Studies." [42]

While critical to the power generation market, operational flexibility is not explicitly considered in the cases in this report. NETL is producing a new volume for this report series examining flexible plant technologies, configurations, and operation. [6]

RESULTS ANALYSIS

Exhibit ES-2 shows the performance and environmental profile summary for all cases. A graph of the net plant efficiency (HHV basis) is provided in Exhibit ES-3.

Exhibit ES-2. Performance summary and environmental profile for all cases

Case Name (Legacy Naming Convention)[A]	IGCC							PC				NGCC	
	Shell		E-Gas™ FSQ		GEP R+Q			SubC PC		SC PC		State-of-the-art 2017 F-Class	
	B1A (5)	B1B (6)	B4A (3)	B4B (4)	B5A (1)	B5B (2)	B5B-Q (2a)	B11A (9)	B11B (10)	B12A (11)	B12B (12)	B31A (13)	B31B (14)
PERFORMANCE													
Gross Power Output (MWe)	765	696	763	742	765	741	685	687	776	685	770	740	690
Auxiliary Power Requirement (MWe)	125	177	122	185	131	185	186	37	126	35	120	14	44
Net Power Output (MWe)	640	519	641	557	634	556	499	650	650	650	650	727	646
Coal Flow rate (lb/hr)	435,418	467,308	456,327	482,173	464,732	482,580	482,918	492,047	634,448	472,037	603,246	N/A	N/A
Natural Gas Flow rate (lb/hr)	N/A	N/A	N/A	N/A	N/A	N/A	N/A	N/A	N/A	N/A	N/A	205,630	205,630
HHV Thermal Input (kW_t)	1,488,680	1,597,710	1,560,166	1,648,535	1,588,902	1,649,926	1,651,082	1,682,291	2,169,156	1,613,879	2,062,478	1,354,905	1,354,905
Net Plant HHV Efficiency (%)	43.0%	32.5%	41.1%	33.8%	39.9%	33.7%	30.2%	38.6%	30.0%	40.3%	31.5%	53.6%	47.7%
Net Plant HHV Heat Rate (Btu/kWh)	7,940	10,497	8,308	10,101	8,554	10,118	11,287	8,832	11,393	8,473	10,834	6,363	7,159
Raw Water Withdrawal, gpm	4,127	5,080	4,357	5,197	4,799	5,512	6,286	6,485	10,634	6,054	9,911	2,902	4,773
Process Water Discharge, gpm	922	1,075	944	1,103	1,033	1,123	1,218	1,334	3,090	1,242	2,893	657	1,670
Raw Water Consumption, gpm	3,206	4,005	3,413	4,093	3,766	4,389	5,068	5,151	7,544	4,811	7,018	2,245	3,103
CO_2 Capture Rate, %	0	90	0	90	0	90	90	0	90	0	90	0	90
CO_2 Emissions (lb/MMBtu)	200	21	199	20	197	20	20	202	20	202	20	119	12
CO_2 Emissions (lb/MWh-gross)	1,328	161	1,391	153	1,396	151	163	1,691	193	1,627	185	741	80
CO_2 Emissions (lb/MWh-net)	1,588	215	1,657	204	1,685	201	224	1,787	231	1,714	219	755	85
SO_2 Emissions (lb/MMBtu)[B]	0.020	0	0.028	0	0.002	0	0	0.081	0	0.081	0	0.001	0
SO_2 Emissions (lb/MWh-gross)	0.130	0	0.192	0	0.015	0	0	0.674	0	0.648	0	0.006	0
NOx Emissions (lb/MMBtu)	0.059	0.049	0.056	0.049	0.054	0.048	0.048	0.084	0.073	0.087	0.077	0.004	0.003
NOx Emissions (lb/MWh-gross)	0.390	0.382	0.393	0.371	0.379	0.364	0.394	0.700	0.700	0.700	0.700	0.022	0.022
PM Emissions (lb/MMBtu)	0.007	0.007	0.007	0.007	0.007	0.007	0.007	0.011	0.009	0.011	0.010	0.002	0
PM Emissions (lb/MWh-gross)	0.047	0.056	0.050	0.054	0.050	0.054	0.058	0.090	0.090	0.090	0.090	0.012	0
Hg Emissions (lb/TBtu)	0.452	0.383	0.430	0.396	0.423	0.395	0.365	0.359	0.314	0.373	0.328	0	0
Hg Emissions (lb/MWh-gross)[C]	3.00×10^{-6}	3.00×10^{-6}	3.00×10^{-6}	3.00×10^{-6}	3.00×10^{-6}	3.00×10^{-6}	3.00×10^{-6}	3.00×10^{-6}	3.00×10^{-6}	3.00×10^{-6}	3.00×10^{-6}	0	0

[A] Previous versions of this report used a different naming convention (this report re-combines cases from *Cost and Performance Baseline for Fossil Energy Plants, Volume 1a* [7] and *Volume 1b.* [8]) The old case numbers are provided here, paired with the new case numbers for reference

[B] Trace amounts of sulfur emissions may exist in the flue gas stream to the stack in capture cases

[C]The mercury capture units were designed to attain the emissions target of 3.00×10^{-6} lb/MWh-gross

Exhibit ES-3. Net plant efficiency (HHV basis)

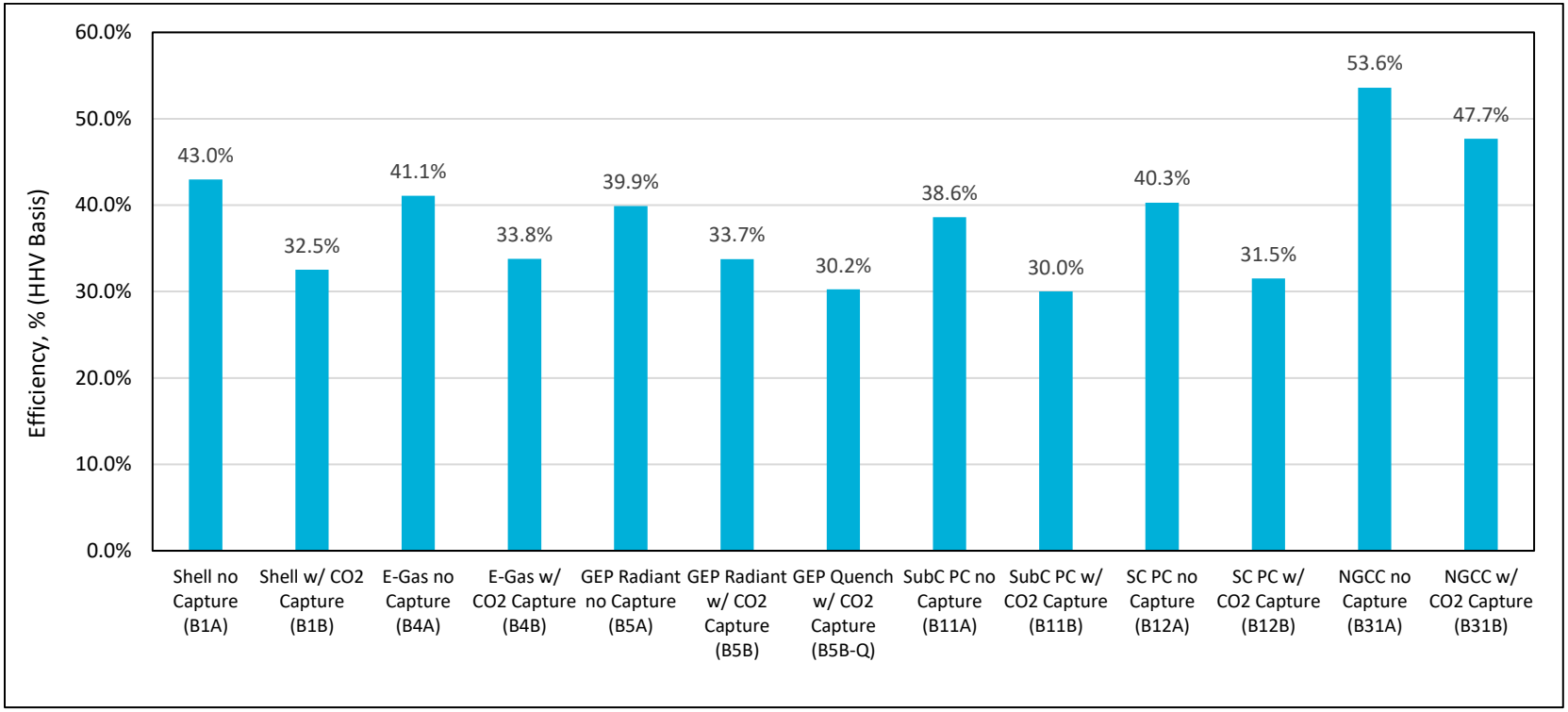

The primary performance and environmental profile conclusions that can be drawn from the IGCC cases are:

- In the non-carbon capture cases, the Shell gasifier has the highest net plant efficiency (43.0 percent), followed by the two-stage E-Gas™ slurry fed gasifier (41.1 percent).
- The energy penalty associated with adding nominal 90 percent CO_2 capture is primarily due to steam extraction for use in the WGS reaction, the auxiliary load for the CO_2 separation and compression equipment, and a slight plant derate due to the higher moisture content of the syngas working fluid. The reduction in net plant efficiency ranges from 6 to 10 percentage points (16 to 24 percent relative to non-capture) with the variability being due to the different gasifier designs (e.g., slurry versus dry feed, syngas quench versus syngas heat recovery), which may vary between the capture and non-capture plant configurations.
    - The lowest energy penalty (6 percentage points) corresponds to the GEP Radiant gasifier cases primarily due to the non-capture plant design (slurry feed, water quench), which results in a high moisture content in the syngas and thus the CO_2 capture design requires little additional shift steam for WGS.
    - The highest energy penalty (10 percentage points) corresponds to the Shell gasifier cases. The design uses a dry feed system and, in the non-capture configuration, has relatively high heat recovery in the syngas cooler with no water quench, resulting in very low moisture content in the syngas. For the capture configuration, a water quench is added, which increases the moisture content of the syngas for the WGS reaction but decreases the heat recovery in the syngas cooler.
- The non-capture CB&I E-Gas™ case using refrigerated methyldiethanolamine (MDEA) has the highest SO_2 emissions (0.192 lb/MWh-gross) of the seven cases because refrigerated MDEA has the lowest H_2S removal efficiency of the AGR technologies considered.
- For the IGCC cases, the syngas scrubber blowdown flow rate range to be treated by the vacuum flash, brine concentrator, and crystallizer ZLD system spans 277–635 gpm, with Case B5B-Q having the highest flow rate for treatment. The other six IGCC cases span a tighter range of 277–332 gpm. The approximate performance impact of implementing the ZLD system across the seven IGCC cases is a 0.1–0.2 percentage point (absolute) decrease in the HHV net plant efficiency, with six of the seven IGCC cases falling at or around a 0.1 absolute percentage point decrease. This is due primarily to the steam extraction and auxiliary load required for the total ZLD system, which is significantly larger than the auxiliary load required for the spray dryer evaporator applied in PC cases.
- Emissions of Hg, HCl, PM, NOx, and SO_2 are all below the applicable federal regulatory limits currently in effect for IGCC technology.

The primary performance and environmental profile conclusions that can be drawn from the PC cases are:

- For the PC cases, adding nominal 90 percent CO_2 capture results in a reduction in net plant efficiency of approximately 9 percentage points (22 percent relative to non-capture).
- For the PC cases, the FGD wastewater blowdown flow rate range to be treated by the spray dryer evaporator spans 55–73 gpm. The approximate performance impact of implementing the spray dryer evaporator across the four PC cases is a 0.25–0.27 percentage point (absolute) decrease in the HHV net plant efficiency. This is due primarily to the diversion of warm flue gas away from the air preheater and to the evaporator, with an additional minor impact resulting from the small auxiliary load required by the spray dryer evaporator.
- Emissions of Hg, HCl, PM, NOx, and SO_2 are all at or below the applicable federal regulatory limits currently in effect for PC technology.

The primary performance and environmental profile conclusions that can be drawn from the NGCC cases are:

- The NGCC cases have the highest net efficiency of all the technologies, both without CO_2 capture (53.6 percent) and with CO_2 capture (47.7 percent). The next highest efficiency is the non-capture Shell IGCC case, with an efficiency of 43.0 percent.
- For the NGCC case, adding nominal 90 percent CO_2 capture results in a reduction in net plant efficiency of approximately 6 percentage points (11 percent relative to non-capture). The NGCC penalty is less than the PC penalty because:
    - Natural gas is less carbon intensive than coal (based on the fuel compositions used in this study, natural gas contains 32 lb carbon/MMBtu (13.7 kg/GJ) [HHV] of heat input and coal contains 55 lb/MMBtu (23.6 kg/GJ) [HHV]).
    - The NGCC non-capture plant is more efficient, thus there is less total CO_2 to capture and compress (NGCC non-capture CO_2 emissions are approximately 54–56 percent lower than the PC cases) when normalized to equivalent net power outputs.
    - These effects are offset slightly by the lower concentration of CO_2 in the NGCC flue gas (4 mol% versus 13 mol% for PC). Concentration of CO_2 is the driving force for capture from the flue gas in the amine system, and the lower concentration requires more energy (steam and auxiliary load) from the base plant to reach the capture target.
- Natural gas contains no Hg or chloride, and PM, NOx, and SO_2 emissions are all at or below the applicable federal regulatory limits currently in effect for NGCC technology.

The cost results for all cases are provided in Exhibit ES-4. A graph of the LCOE is provided in Exhibit ES-5.

Exhibit ES-4. Cost summary for all cases

Case Name	IGCC[A]							PC[A]				NGCC[A]	
	Shell		E-Gas™ FSQ		GEP R+Q			SubC PC		SC PC		State-of-the-art 2017 F-Class	
	B1A	B1B	B4A	B4B	B5A	B5B	B5B-Q	B11A	B11B	B12A	B12B	B31A	B31B
COST													
Total Plant Cost (2018$/kW)	3,824	6,209	3,395	5,177	3,822	5,240	4,855	2,011	3,756	2,099	3,800	780	1,984
Bare Erected Cost	2,674	4,279	2,386	3,588	2,679	3,631	3,369	1,482	2,641	1,548	2,677	561	1,312
Home Office Expenses	401	642	358	538	402	545	505	259	462	271	469	112	262
Project Contingency	554	923	499	786	557	783	757	269	526	280	531	107	304
Process Contingency	195	366	151	266	184	281	224	0	127	0	123	0	105
Total Overnight Cost (2018$M)	2,991	3,964	2,664	3,555	2,972	3,589	2,990	1,611	2,991	1,678	3,023	692	1,558
Total Overnight Cost (2018$/kW)	4,675	7,632	4,157	6,384	4,690	6,450	5,991	2,478	4,604	2,582	4,654	952	2,412
Owner's Costs	851	1,423	763	1,207	868	1,210	1,136	467	848	484	854	172	428
Total As-Spent Cost (2018$/kW)	5,397	8,810	4,799	7,370	5,414	7,446	6,916	2,861	5,315	2,981	5,372	1,040	2,635
LCOE ($/MWh) (excluding T&S)	105.8	166.5	97.5	143.1	107.9	144.2	139.4	63.9	106.3	64.4	105.3	43.3	70.9
Capital Costs	54.5	88.9	48.4	74.4	54.7	75.2	69.8	27.2	50.5	28.3	51.0	9.9	25.0
Fixed Costs	20.0	31.9	18.0	26.9	20.0	27.2	25.6	9.1	16.0	9.5	16.1	3.6	8.6
Variable Costs	13.6	22.3	12.6	19.4	14.1	19.3	18.9	7.9	14.5	7.7	14.0	1.7	5.6
Fuel Costs	17.7	23.4	18.5	22.5	19.0	22.5	25.1	19.7	25.4	18.9	24.1	28.1	31.6
LCOE ($/MWh) (including T&S)	105.8	175.0	97.5	151.3	107.9	152.3	148.5	63.9	115.7	64.4	114.3	43.3	74.4
CO_2 T&S Costs	0.0	8.6	0.0	8.2	0.0	8.1	9.1	0.0	9.4	0.0	8.9	0.0	3.5
Breakeven CO_2 Sales Price (ex. T&S), $/tonne[B]	N/A	119.4	N/A	96.0	N/A	98.1	82.7	N/A	44.6	N/A	45.7	N/A	79.6
Breakeven CO_2 Emissions Penalty (incl. T&S), $/tonne[B]	N/A	162.7	N/A	126.9	N/A	128.3	124.4	N/A	76.3	N/A	73.5	N/A	102.2

[A]Financing structures are presented in NETL's "QGESS: Cost Estimation Methodology for NETL Assessments of Power Plant Performance" [4]
[B]Both the breakeven CO_2 sales price and emissions penalty were calculated based on the non-capture SC PC Case B12A for all coal cases, and the non-capture NGCC Case B31A for natural gas cases.

The primary cost conclusions that can be drawn from the IGCC cases are:

- E-Gas™ has the lowest total overnight cost (TOC) cost among the non-capture cases. The E-Gas™ technology has several features that lend to the lower cost, such as:
    - The firetube syngas cooler is much smaller and less expensive than a radiant section. E-Gas™ can use a firetube boiler because the two-stage design reduces the syngas temperature (slurry quench) to a range where a radiant cooler is not needed.
    - The firetube syngas cooler sits next to the gasifier instead of above or below it, which reduces the height of the main gasifier structure. The E-Gas™ proprietary slag removal system—used instead of lock hoppers below the gasifier—also contributes to the lower structure height.
- The normalized TOC of the GEP Radiant and Shell gasifier cases are approximately 12 percent greater than E-Gas™.
- The GEP Quench gasifier (GEP Radiant is 8 percent greater than GEP Quench) is the low-cost technology in the CO_2 capture cases, with E-Gas™ normalized TOC approximately 7 percent higher and Shell approximately 27 percent higher.
- The ASU cost represents 3–4 percent of the TOC in all cases. The ASU cost includes oxygen (O_2) and N_2 compression. With N_2 dilution used to the maximum extent possible, N_2 compression costs are significant.
- The normalized TOC premium for adding CO_2 capture averages 46 percent, spanning a TOC increase range of $1,301/kW to $2,957/kW.
- The LCOE is dominated by capital costs, comprising at least 50 percent of the total (excluding T&S costs) in all cases.
- In the non-capture cases the E-Gas™ gasifier has the lowest LCOE, but the differential with Shell is reduced (relative to the normalized TOC comparison) primarily because of the higher efficiency of the Shell gasifier. The Shell LCOE is 8 percent higher than E-Gas™ (compared to 13 percent higher normalized TOC). The GEP gasifier LCOE is about 11 percent higher than E-Gas™.
- In the capture cases, the order of the GEP Radiant and Shell gasifiers is reversed, with GEP Quench being the lowest LCOE option. As discussed in the performance results previously, Shell presents with the largest energy penalty as a result of the addition of capture. This penalty translates to a lower plant efficiency as compared to GEP Radiant, and results in the LCOE order reversing as compared to the non-capture cases. The range is from $139.4/MWh for GEP Quench to $166.5/MWh for Shell with E-Gas™ and GEP Radiant intermediate at $143.1/MWh and $144.2/MWh, respectively, excluding T&S. The LCOE CO_2 capture premium for the cases averages 42 percent (a range of 29–57 percent).
- The CO_2 T&S LCOE component composes 5–6 percent of the total LCOE in all capture cases.

The primary cost conclusions that can be drawn from the PC cases are:

- Capital costs for SubC and SC PC are essentially equivalent within the accuracy of this report for a constant power output.
- The addition of CO_2 capture increases the capital costs—normalized to net power output—by 80–86 percent for PC.
- The difference between the SC PC and SubC PC LCOEs is minor, given the level of accuracy of the study estimate.
- The capital cost component represents the largest portion of the LCOE in PC cases (excluding T&S costs), ranging from 43 to 48 percent of the total LCOE.
- The fuel cost component in PC cases represents 23–31 percent of the total LCOE (excluding T&S costs). This is higher, but comparable with IGCC cases, and significantly less than the fuel contribution shown in NGCC cases.
- CO_2 T&S costs add $9/MWh to the LCOE, which accounts for approximately 8 percent of the total LCOE.
- The PC cases incur a 64–67 percent increase in LCOE due to the addition of CO_2 capture.

The primary cost conclusions that can be drawn from the NGCC cases are:

- The addition of CO_2 capture increases the capital cost—normalized to net power output—by 153 percent for NGCC.
- The capital cost component in NGCC cases represents 23–35 percent of the total LCOE (excluding T&S costs), a smaller percentage than in PC or IGCC cases.
- The fuel cost component represents the largest portion of the LCOE in NGCC cases, ranging from 45 to 65 percent of the total LCOE (excluding T&S costs).
- CO_2 T&S costs add $4/MWh to the LCOE, which accounts for approximately 5 percent of the total LCOE.
- The NGCC case incurs a 64 percent increase in LCOE due to the addition of CO_2 capture.

General cost conclusions that can be drawn between the three technology types are:

- Based on TOC in $/kW, NGCC capital costs are approximately 37 percent and 52 percent of the PC capital costs for non-capture and capture cases, respectively.
- NGCC plant LCOEs are approximately 67 percent of the PC plant LCOEs, for non-capture and capture cases across the board.
- Despite the higher net plant efficiency and equivalent decrease in LCOE, both the breakeven CO_2 sales price and emissions penalty are higher for NGCC cases than PC cases due to the lower concentration and amount of CO_2 available for capture.
- If future legislation assigns a cost to carbon emissions, all the technologies examined in this report will become more expensive. The technologies without carbon capture will

be impacted to a larger extent than those with carbon capture, and coal-based technologies will be impacted more than natural gas-based technologies.

Exhibit ES-5. LCOE by cost component

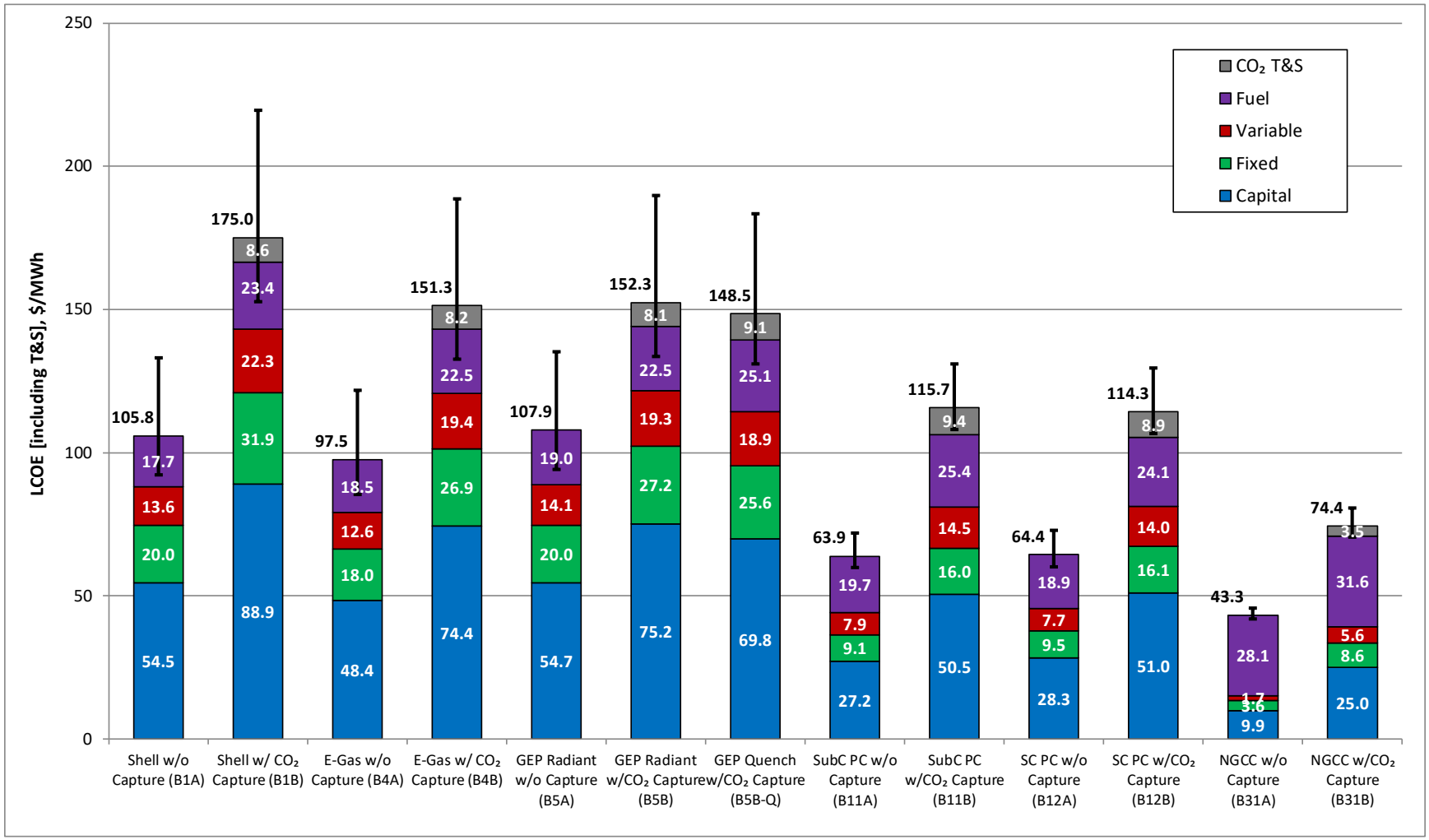

*Financing structures are presented in NETL's "QGESS: Cost Estimation Methodology for NETL Assessments of Power Plant Performance" [4]

As discussed in the Special Considerations on Reported Costs section below, the capital cost estimates in this report reflect varying uncertainty ranges by technology type. The error bars included in Exhibit ES-5 represent the potential LCOE range relative to the maximum and minimum capital cost uncertainty ranges. The LCOE ranges presented are not reflective of other changes, such as variation in fuel price, labor price, CF, or other factors.

SENSITIVITIES

Exhibit ES-6 shows the LCOE sensitivity to fuel costs for NGCC and SC PC cases with and without carbon capture and storage (CCS), as well as the lowest LCOE IGCC cases with (GEP Quench) and without (E-Gas) CCS. The bands for the coal cases represent a variance in coal price from $1.67 to $2.78/MMBtu ($1.58 to $2.63/GJ) (±25 percent of the base study value of $2.23/MMBtu). This sensitivity highlights regions of competitiveness for NGCC with SC PC and the lowest cost IGCC options, with and without CCS, as a function of the delivered natural gas price. The base case assumed natural gas price is $4.19/GJ ($4.42/MMBtu).

Exhibit ES-6. LCOE sensitivity to coal costs

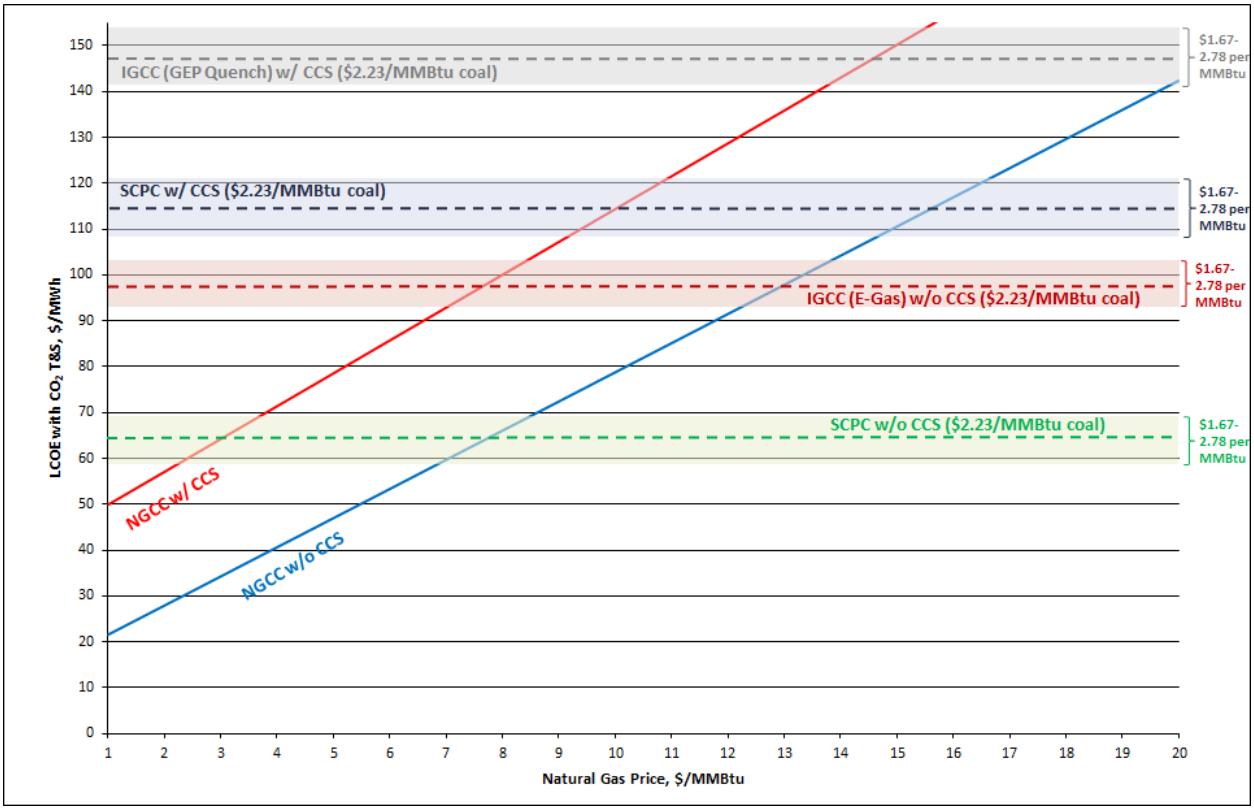

Sale of the captured CO_2 for utilization and storage in enhanced oil recovery (EOR) has the potential to provide a revenue stream for cases with CO_2 capture. The plant gate CO_2 sales price, or breakeven CO_2 sales price, will ultimately depend on a number of factors including plant location and crude oil prices. The impact of CO_2 sales and the implications on the competitiveness of the capture technologies can be considered in a "phase diagram" type plot,

as shown in Exhibit ES-7. The lines in the plot represent LCOE parity between different pairs of technologies.

The plot illustrates the following when comparing NGCC and PC technologies:

- Non-capture plants are the low-cost option below a CO_2 price of $46/tonne ($41/ton).
- NGCC is preferred when gas prices are below $7.5/MMBtu with a CO_2 sale price below $46/tonne ($41/ton) (at a CF of 85 percent). The natural gas price that provides parity between various NGCC and PC cases drops off at higher CO_2 revenues, reaching $2/MMBtu at approximately $95/tonne ($86/ton).

Exhibit ES-7. Lowest cost technology options at various natural gas and CO_2 sales prices for NGCC and PC

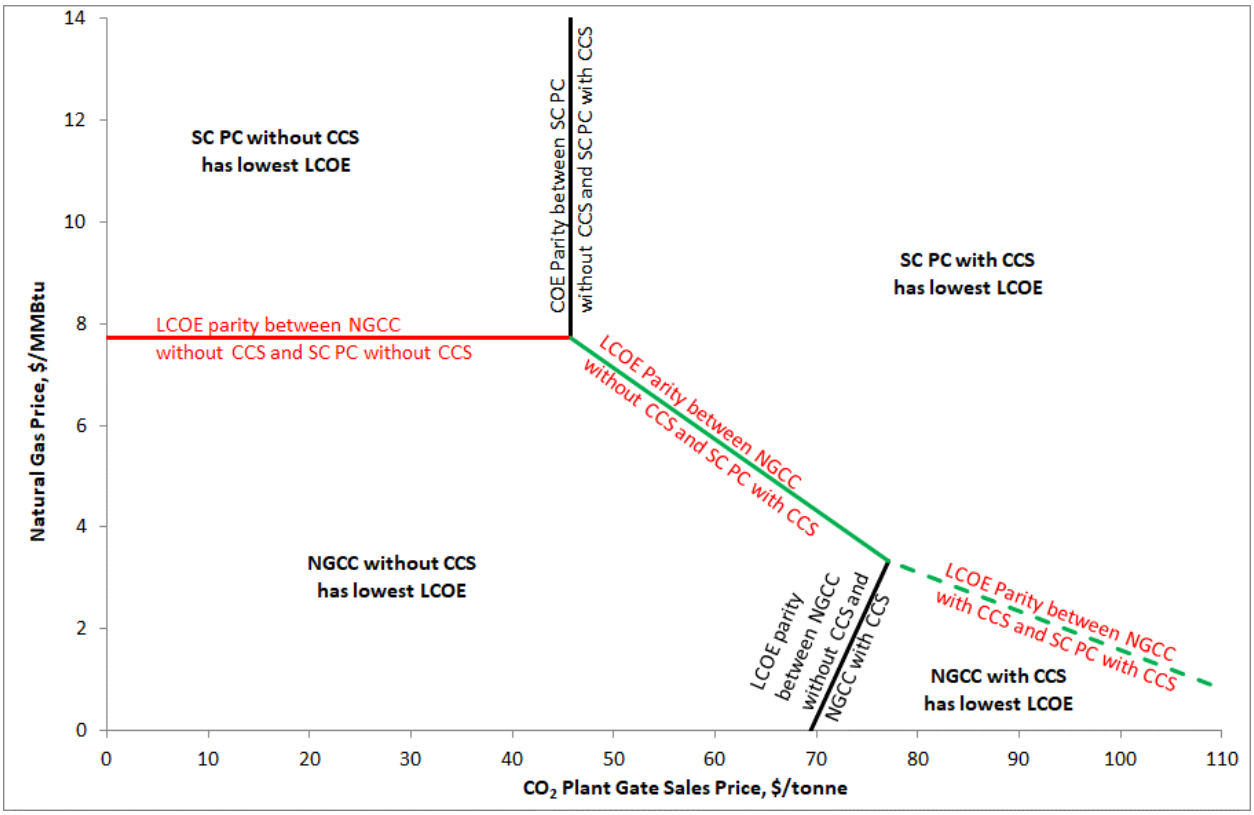

A similar plot incorporating IGCC was also generated and is shown in Exhibit ES-8. Relevant observations compared to Exhibit ES-7 include:

- Non-capture NGCC and PC still appear as the preferred options, up to a CO_2 sale price of ~$70/tonne (at a CF of 85 percent). In this instance, the next lowest cost option is NGCC with CCS (versus IGCC with CCS), as compared to SC PC with CCS (versus NGCC with CCS) in the prior example.
- IGCC with CCS becomes competitive at a CO_2 sale price of $88/tonne, when gas prices are above $7/MMBtu. The competitive point for IGCC with CCS ($88/tonne CO_2 and >$7/MMBtu natural gas) is a higher cost option than the SC PC with CCS option presented Exhibit ES-7 (e.g. this point falls well within the SC PC with CCS quadrant).

Exhibit ES-8. Lowest cost technology options at various natural gas and CO_2 sales prices for NGCC, PC, and IGCC

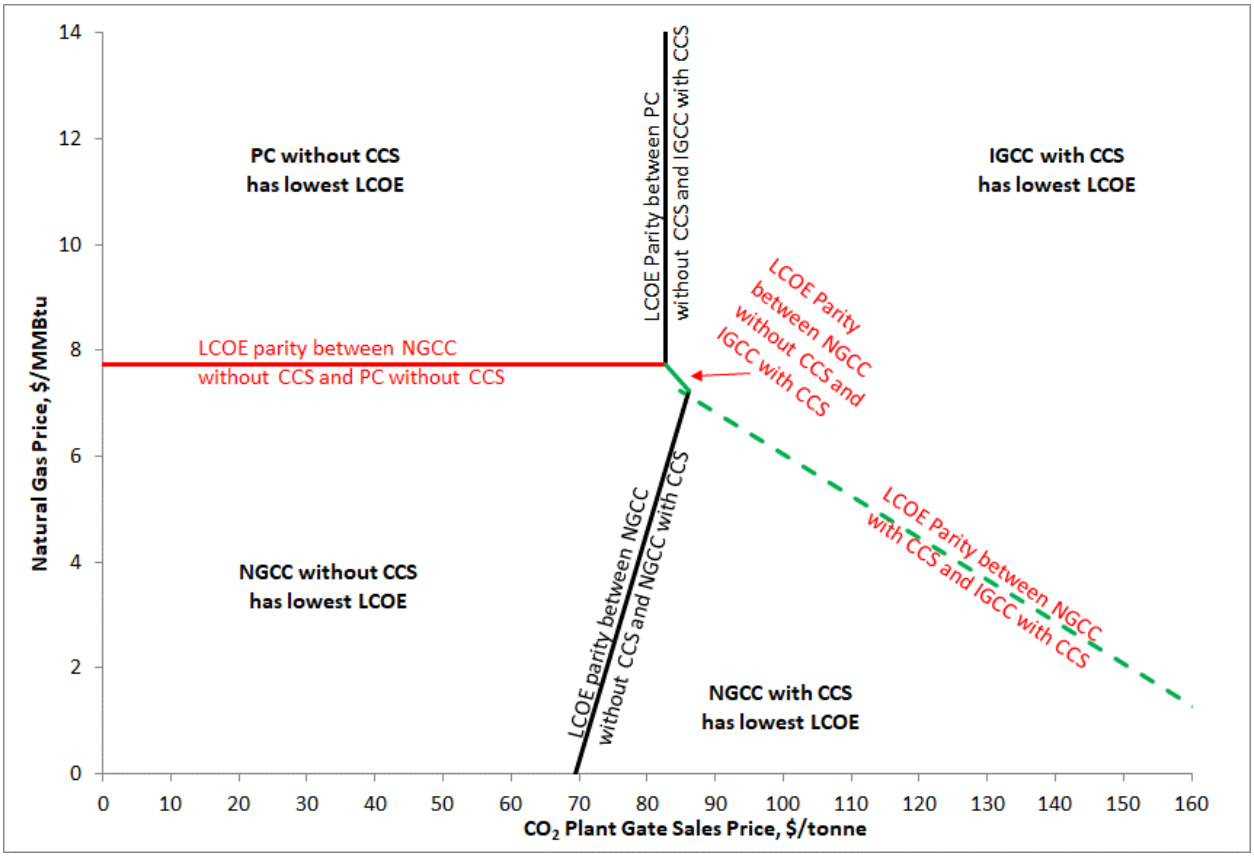

SPECIAL CONSIDERATIONS ON REPORTED COSTS

Capital Costs

The capital cost estimates documented in this report reflect varying uncertainty ranges by technology type, as shown in Exhibit ES-9.

Exhibit ES-9. Capital cost uncertainty ranges

Technology	Uncertainty Range	AACE Classification
IGCC	-25/+50	Class 5
PC	-15/+30	Class 4
NGCC	-15/+25	Class 4

IGCC cases carry an uncertainty range of -25 percent/+50 percent, consistent with Association for the Advancement of Cost Engineering (AACE) Class 5 cost estimates (i.e., feasibility study) [4] [9] [10], based on the level of engineering design performed. This range is deemed reflective of recent commercial power IGCC experience. PC and NGCC cases carry smaller ranges, and both fall within AACE Class 4 estimates. Given recent experience with NGCC plants, the NGCC uncertainty range is slightly smaller than PC. In all cases, this report intends to represent the next commercial offering and relies on vendor cost estimates for component technologies. It

also applies process contingencies at the appropriate subsystem levels in an attempt to account for expected but undefined costs, which can be a challenge for emerging technologies.

Costs of Mature Technologies and Designs

The cost estimates for plant designs that only contain fully mature technologies, which have been widely deployed at commercial scale (e.g., PC and NGCC power plants without CO_2 capture), reflect nth-of-a-kind (NOAK) on the technology commercialization maturity spectrum. The costs of such plants have dropped over time due to "learning by doing" and risk reduction benefits that result from serial deployments as well as from continuing research and development (R&D).

Costs of Emerging Technologies and Designs

The cost estimates for plant designs that include technologies that are not yet fully mature (e.g., IGCC plants and any plant with CO_2 capture) use the same cost estimating methodology as for mature plant designs, which does not fully account for the unique cost premiums associated with the initial, complex integrations of emerging technologies in a commercial application. Thus, it is anticipated that initial deployments of these plants may incur costs higher than those reflected within this report.

Other Factors

Actual reported project costs for all the plant types are also expected to deviate from the cost estimates in this report due to project- and site-specific considerations (e.g., contracting strategy, local labor costs and availability, seismic conditions, water quality, financing parameters, local environmental concerns, weather delays) that may make construction more costly. Such variations are not captured by the reported cost uncertainty.

Future Cost Trends

Continuing research, development, and demonstration (RD&D) is expected to result in designs that are more advanced than those assessed by this report, leading to costs that are lower than those estimated here.

1 INTRODUCTION

This report presents an independent assessment of the cost and performance of select fossil energy power systems – specifically, integrated gasification combined cycle (IGCC), pulverized coal (PC), and natural gas combined cycle (NGCC) plants – using a systematic, transparent technical and economic approach. This is Volume 1 of a four-volume series, comprised as follows:

- Volume 1: Bituminous Coal and Natural Gas to Electricity
- Volume 2: Coal to Synthetic Natural Gas and Ammonia (Various Coal Ranks)
- Volume 3: Low Rank Coal and Natural Gas to Electricity
- Volume 4: Bituminous Coal to Liquid Fuels

The cost and performance of fossil fuel-based generation technologies represented in this report (and the series at large) are important inputs to assessments and determinations of technology combinations to be utilized to meet the projected demands of future power markets. In addition to informing technology comparisons, the reference plant configurations found in this report provide perspective for regulators and policy makers. From a research & development perspective, this report is used to assess goals and metrics and to provide a consistent basis for comparing developing technologies.

Selection of new generation technologies will depend on many factors, including:

- Capital and operating costs
- Overall energy efficiency
- Operational flexibility (e.g. ramp rate, turndown, start-up time, etc.)
- Fuel prices
- Project financial requirements
- Availability, reliability, and environmental performance
- Current and potential regulations governing air, water, and solid waste discharges from fossil-fueled power plants
- Specific site and application constraints and requirements
- Market penetration of clean coal technologies that have matured and improved as a result of recent commercial-scale demonstrations under the Department of Energy's (DOE) Clean Coal and Carbon Management Program

Thirteen power plant configurations are analyzed in this report. A summary of the configurations is shown in Exhibit 1-1:

- Seven IGCC configurations—two Shell Global Solutions (Shell) gasifiers (with and without carbon dioxide [CO_2] capture), two Chicago Bridge and Iron (CB&I) E-Gas™ full-slurry quench (FSQ) gasifiers (with and without CO_2 capture), and three General Electric Power

(GEP) gasifiers (one without [radiant] and two with [one radiant and one quench] CO_2 capture), all with two state-of-the-art 2008 F-Class combustion turbines.

- Four PC power plant configurations—two subcritical (SubC) and two supercritical (SC) (with and without CO_2 capture).
- Two state-of-the-art 2017 F-Class combustion turbine-based NGCC power plant configurations (with and without CO_2 capture).

The Shell Cansolv CO_2 capture system utilized for PC and NGCC capture plants is an amine-based solvent system. Different Cansolv solvent formulations, tailored for their specific PC and NGCC flue gas compositions, are used.

This revision reflects varying degrees of technology vendor input for IGCC plant updates to the air separation unit (ASU), steam cycle, syngas scrubber, water gas shift (WGS) reactors, carbonyl sulfide (COS) hydrolysis reactors, low temperature heat recovery (LTHR) process, ammonia (NH_3) scrubber, sour water strippers (SWSs), syngas humidification, Selexol acid gas removal (AGR), CO_2 compressors, and process water treatment systems[d]; PC plant updates to the pollution control equipment and process water treatment systems[d]; PC and NGCC plant updates to the CO_2 capture, CO_2 compression, and steam turbine technology; and NGCC plant updates to the combustion turbine technology. However, the final assessment of performance and cost was determined independently and is not endorsed by the individual vendors.

1.1 GENERATING UNIT CONFIGURATIONS

A summary of plant configurations considered in this report is presented in Exhibit 1-1. Components for each plant configuration are described in more detail in the corresponding report sections for each case.

The IGCC cases have different gross and net power outputs because of the combustion turbine (CT) size constraint. The state-of-the-art 2008 F-class CT used to model the cases comes in a standard size of 232 MW when operated on syngas at conditions set by the International Organization for Standardization (ISO). Each case uses two CTs for a combined gross output of 464 MW. In the combined cycle, a heat recovery steam generator (HRSG) extracts heat from the CT exhaust to power a steam turbine.

The IGCC CO_2 capture cases consume more extraction steam than the non-capture cases, thus reducing the steam turbine output. In addition, the capture cases have a higher auxiliary load requirement than non-capture cases, which serves to further reduce net plant output.

While the two CTs provide 464 MW gross output in all IGCC cases, the overall combined cycle gross output ranges from 685 to 765 MW, which results in a range of net output from 499 (Case B5B-Q) to 641 MW (Case B4A). The coal feed rate required to achieve the gross power output is

[d] One of the design objectives of this study was to present IGCC and PC plants that are compliant with the Effluent Limitation Guidelines. Under the assumptions of this study, blowdown from both the steam cycle and cooling tower are exempt, provided that no process wastewater is utilized as makeup to either of these systems.

The methodology in which water discharged to local waterways is eliminated is referred to as zero liquid discharge (ZLD). For the purposes of this study, purification and recycling systems were selected for IGCC cases as the means to achieve ZLD, with the process water treatment systems upgraded to include a vacuum flash, brine concentrator, and crystallizer.

also different between the six cases, ranging from 197,500 to 219,000 kg/hr (435,400 to 482,900 lb/hr).

The NGCC cases also have different gross and net power outputs because of the CT size constraint. The state-of-the-art 2017 F-class CT used to model the NGCC cases comes in a standard size of 238 MW when operated at conditions set by ISO. Each case uses two CTs for a combined gross output of 477 MW. In the combined cycle, a HRSG extracts heat from the CT exhaust to power a steam turbine.

The net output in the NGCC CO_2 capture case is significantly reduced compared to the non-capture case due to the high auxiliary power load and significant extraction steam requirement of the CO_2 capture system.

While the two CTs provide 477 MW gross output in both NGCC cases, the overall combined cycle gross output ranges from 690 to 740 MW, which results in a range of net output from 646 MW (Case B31B) to 727 MW (Case B31A). The natural gas feed rate is the same in both cases at 93,272 kg/hr (205,630 lb/hr).

All four PC cases have a net output of 650 MW, which represents an increase from previous revisions of this report where a PC net output of 550 MW was considered. The 2017 state-of-the-art F-class CT considered in the NGCC cases increases the net output of those cases as compared to previous revision of this report. When considering the NGCC and IGCC cases net output, PC net output selection of 650 MW represents the most optimal midpoint for cross-technology results comparison with NGCC with CO_2 capture (646 MW-net), as well as IGCC without CO_2 capture (634–641 MW-net). NGCC without CO_2 capture (727 MW-net) and IGCC with CO_2 capture (499–557 MW-net) represent the maximum and minimum, respectively, net plant outputs for the cases considered in this report. The boiler and steam turbine industry's ability to match unit size to a custom specification has been commercially demonstrated enabling a common net output comparison of the PC cases in this report. The coal feed rate was increased in the CO_2 capture cases to increase the gross steam turbine output and account for the higher auxiliary load as well as the required extraction steam, resulting in a constant net output.

The balance of this report is organized as follows:

- Section 2 provides the basis for technical, environmental, and cost evaluations.
- Section 3 describes the IGCC technologies modeled and presents the results for the seven cases.
- Section 4 describes the PC technologies modeled and presents the results for the four PC cases.
- Section 5 describes the NGCC technologies modeled and presents the results for the two NGCC cases.
- Section 6 provides a cross comparison of IGCC, PC, and NGCC cases.
- Section 7 includes a record of report revisions.

Exhibit 1-1. Case descriptions

Case (Old Case Name[A])	Plant Type	Steam Cycle, psig/°F/°F (MPa/°C/°C)	Combustion Turbine	Gasifier/Boiler Technology	Oxidant	H_2S Separation	Sulfur Removal	PM Control	NOx Control	CO_2 Separation[D]	Process Water Treatment
B1A (5)	IGCC	1800/1050/1050 (12.4/566/566)	2 x State-of-the-art 2008 F-Class[B]	Shell	95 mol% O_2	Sulfinol-M	Claus Plant/Sulfur	Cyclone, candle filter, and water scrubber	LNB and N_2 dilution	N/A	Vacuum flash, brine concentrator, crystallizer
B1B (6)		1800/1000/1000 (12.4/538/538)				Selexol				Selexol 2nd stage	
B4A (3)		1800/1050/1050 (12.4/566/566)		CB&I E-Gas™		Refrigerated MDEA				N/A	
B4B (4)		1800/1000/1000 (12.4/538/538)				Selexol				Selexol 2nd stage	
B5A (1)		1800/1050/1050 (12.4/566/566)		GEP Radiant				Quench, water scrubber, and AGR adsorber		N/A	
B5B (2)		1800/1000/1000 (12.4/538/538)								Selexol 2nd stage	
B5B-Q (2a)		1800/1000/1000 (12.4/538/538)		GEP Quench						Selexol 2nd stage	
B11A (9)	PC	2400/1050/1050 (16.5/566/566)	N/A	SubC PC	Air	N/A	Wet FGD/ Gypsum	Baghouse	LNB w/OFA and SCR	N/A	Spray dryer evaporator
B11B (10)										Cansolv	
B12A (11)		3500/1100/1100 (24.1/593/593)		SC PC[C]						N/A	
B12B (12)										Cansolv	
B31A (13)	NGCC	2400/1085/1085 (16.4/585/585)	2 x State-of-the-art 2017 F-Class	HRSG	Air	N/A	N/A	N/A	LNB and SCR	N/A	N/A
B31B (14)										Cansolv	

[A]All plants in this report are assumed to be located at a generic plant site in the midwestern United States
[B]The IGCC F-class combustion turbines represent the same technology considered in the previous version of this report. There have not been significant recent advances in high-H_2 syngas turbine technology; consequently, these turbines are still considered state-of-the-art.
[C]While labeled as SC conditions, the SC steam cycle conditions utilized in this report are also generally representative of commercial plants characterized as ultra-supercritical (USC), particularly with respect to temperature (593°C [1,100°F]). Because efficiency is more sensitive to steam cycle temperature than pressure, the resulting performance is at or near that of top-performing commercially-available USC PC plants.
[D]All IGCC cases have a nominal 90 percent removal rate based on the total feedstock minus unburned carbon in slag. All PC and NGCC cases have a nominal 90 percent removal rate based on the total feedstock minus unburned carbon in ash (PC cases). The rate of CO_2 capture from the flue gas in the Cansolv systems and from syngas in the Selexol systems varies. An explanation for the difference is provided in Section 2.4.4. All cases sequester the CO_2 offsite.

2 General Evaluation Basis

For each of the plant configurations analyzed in this report, an Aspen Plus® (Aspen) model was developed and used to generate material and energy balances which were, in turn, used to provide a design basis for items in the major equipment list. The equipment list and material balances were used as the basis for generating the capital and operating cost estimates. Performance and process limits were based upon published reports, information obtained from vendors and users of the technology, performance data from design/build utility projects, and/or best engineering judgment. Capital and operating costs were estimated by Black & Veatch based on simulation results using an in-house database and conceptual estimating models. The estimating models are based on a United States (U.S.) Gulf Coast location and the labor cost was factored to reflect a Midwest location. Costs were further calibrated using a combination of adjusted vendor-furnished data and scaled estimates from previous design/build projects. Legacy costs were established in 2007 dollars in prior reports, and subsequently updated to 2011 dollars. The present revision reports costs in 2018 dollars. Ultimately, a levelized cost of electricity (LCOE) was calculated for each of the cases and is reported as the revenue requirement figure-of-merit.

The balance of this section discusses the design basis common to all technologies, as well as environmental targets and cost assumptions used in this report. Technology specific design criteria are covered in subsequent chapters.

2.1 Site Characteristics

All plants in this report are assumed to be located at a generic plant site in the midwestern United States, with site characteristics and ambient conditions as presented in Exhibit 2-1 and Exhibit 2-2. The ambient conditions are the same as ISO conditions.

Exhibit 2-1. Site characteristics

Parameter	Value
Location	Greenfield, Midwestern U.S.
Topography	Level
Size (IGCC and PC), acres	300
Size (NGCC), acres	100
Transportation	Rail or Highway
Slag (IGCC) and Ash (PC) Disposal	Off-Site
Water	50% Municipal and 50% Ground Water

Exhibit 2-2. Site ambient conditions

Parameter	Value
Elevation, m (ft)	0 (0)
Barometric Pressure, MPa (psia)	0.101 (14.696)
Average Ambient Dry Bulb Temperature, °C (°F)	15 (59)
Average Ambient Wet Bulb Temperature, °C (°F)	10.8 (51.5)
Design Ambient Relative Humidity, %	60
Cooling Water Temperature, °C (°F)[A]	15.6 (60)
Air composition based on published psychrometric data, mass %	
N_2	75.055
O_2	22.998
Ar	1.280
H_2O	0.616
CO_2	0.050
Total	100.00

[A]The cooling water temperature is the cooling tower cooling water exit temperature. This is set to 4.8°C (8.5°F) above ambient wet bulb conditions in ISO cases.

The land area for IGCC and PC cases assumes that 30 acres are required for the plant proper, and the balance provides a buffer of approximately 0.4 km (0.25 mi) to the fence line. The extra land could also provide for a rail loop if required (rail loop is not included in this report). In the NGCC cases it was assumed the plant proper occupies about 10 acres leaving a buffer of 0.24 km (0.15 mi) to the plant fence line.

The quality of plant makeup water will vary dramatically from source-to-source (municipal versus groundwater), as well as from site to site, and can be expected to vary significantly throughout any given site, particularly if ground water is utilized. In this study, 50 percent of the makeup water to the plants is sourced from a publicly-owned treatment works, with the balance of the makeup water sourced from groundwater. The assumed design makeup water composition is provided in Exhibit 2-3.

The makeup water composition reported in the following table is based on water qualities from actual operations. The design concentration of each constituent is individually representative of a plant configuration comparable to those in this study. However, due to the interaction and interdependencies of each constituent and the multitude of potential species, the makeup water quality cannot be considered representative as a whole. The makeup water quality is intended to inform users of the contaminants likely present, and at what concentrations they may be expected, to facilitate appropriate equipment selection and design.

Exhibit 2-3. Design makeup water quality

Parameter	Groundwater (Range)	POTW Water (Range)	Makeup Water (Design Basis)
pH	6.6 – 7.9	7.1 – 8.0	7.4
Specific Conductance, µS/cm	1,096 – 1,484	1,150 – 1,629	1312
Turbidity, NTU		<50	<50
Total Dissolved Solids, ppm			906
M-Alkalinity as $CaCO_3$, ppm[A]	200 – 325	184 – 596	278
Sodium as Na, ppm	102 – 150	172 – 336	168
Chloride as Cl, ppm	73 – 100	205 – 275	157
Sulfate as SO_4, ppm	100 – 292	73 – 122	153
Calcium as Ca, ppm	106 – 160	71 – 117	106
Magnesium as Mg, ppm	39 – 75	19 – 33	40
Potassium as K, ppm	15 – 41	11 – 21	18
Silica as SiO_2, ppm	5 – 12	21 – 26	16
Nitrate as N, ppm	0.1 – 0.8	18 – 34	12
Total Phosphate as PO_4, ppm	0.1 – 0.2	1.3 – 6.1	1.6
Strontium as Sr, ppm	2.48 – 2.97	0.319 – 0.415	1.5
Fluoride as F, ppm	0.5 – 1.21	0.5 – 0.9	0.8
Boron as B, ppm	0.7 – 0.77		0.37
Iron as Fe, ppm	0.099 – 0.629	0.1	0.249
Barium as Ba, ppm	0.011 – 0.52	0.092 – 0.248	0.169
Aluminum as Al, ppm	0.068 – 0.1	0.1 – 0.107	0.098
Selenium as Se, ppm	0.02 – 0.15	0.0008	0.043
Lead as Pb, ppm	0.002 – 0.1		0.026
Arsenic as As, ppm	0.005 – 0.08		0.023
Copper as Cu, ppm	0.004 – 0.03	0.012 – 0.055	0.018
Nickel as Ni, ppm	0.02 – 0.05		0.018
Manganese as Mn, ppm	0.007 – 0.015	0.005 – 0.016	0.009
Zinc as Zn, ppm	0.005 – 0.024		0.009
Chromium as Cr, ppm	0.01 – 0.02		0.008
Cadmium as Cd, ppm	0.002 – 0.02		0.006
Silver as Ag, ppm	0.002 – 0.02		0.006
Mercury as Hg, ppm	0.0002 – 0.001		3E-04

[A]Alkalinity is reported as $CaCO_3$ equivalent, rather than the concentration of HCO_3. The concentration of HCO_3 can be obtained by dividing the alkalinity by 0.82.

In all cases, it was assumed that the steam turbine is enclosed in a turbine building; in the PC cases the boiler is also enclosed. The gasifier and combustion turbines are not enclosed.

The following design parameters are considered site-specific and are not quantified for this report. Allowances for normal conditions and construction are included in the cost estimates.

- Flood plain considerations
- Existing soil/site conditions
- Water discharges and reuse
- Rainfall/snowfall criteria
- Seismic design
- Buildings/enclosures
- Local code height requirements
- Weather delays
- Other local environmental concerns
- Noise regulations

2.2 COAL CHARACTERISTICS

The design coal is Illinois No. 6 with characteristics presented in Exhibit 2-4. The coal properties are from the 2019 revision of the Quality Guidelines for Energy System Studies (QGESS) document "Detailed Coal Specifications." [1]

Exhibit 2-4. Design coal

Rank	Bituminous	
Seam	Illinois No. 6	
Proximate Analysis (weight %)[A]		
	As Received	Dry
Moisture	11.12	0.00
Ash	9.70	10.91
Volatile Matter	34.99	39.37
Fixed Carbon	44.19	49.72
Total	100.00	100.00
Sulfur	2.51	2.82
HHV, kJ/kg (Btu/lb)	27,113 (11,666)	30,506 (13,126)
LHV, kJ/kg (Btu/lb)	26,151 (11,252)	29,544 (12,712)
Ultimate Analysis (weight %)		
	As Received	Dry
Moisture	11.12	0.00
Carbon	63.75	71.72
Hydrogen	4.50	5.06
Nitrogen	1.25	1.41
Chlorine	0.15	0.17
Sulfur	2.51	2.82
Ash	9.70	10.91
Oxygen[B]	7.02	7.91
Total	100.00	100.00

[A]The proximate analysis assumes sulfur as volatile matter.
[B]By difference.

The chlorine content of 34 samples of Illinois No. 6 coal has an arithmetic mean value of 1,671 ppmwd with a standard deviation of 1,189 ppmwd based on coal samples shipped by Illinois mines. [11]

Based on the location of the Illinois No. 6 mine, along with the Herrin coal chlorine map published by the Illinois State Geological Survey [12], it was determined that Illinois No. 6 coal could be expected to have a chlorine content between 0.1 and 0.2 percent, on a dry basis. Therefore, the coal chloride content for this report was assumed to be the arithmetic mean value of 1,671 ppmwd.

The mercury (Hg) content of 34 samples of Illinois No. 6 coal has an arithmetic mean value of 0.09 ppmwd with standard deviation of 0.06 based on coal samples shipped by Illinois mines. [11] Hence, as illustrated in Exhibit 2-5, there is a 50 percent probability that the Hg content in the Illinois No. 6 coal would not exceed 0.09 ppmwd. The coal Hg content for this report was assumed to be 0.15 ppmwd, which corresponds to the mean plus one standard deviation and encompasses about 84 percent of the samples. It was further assumed that all the coal Hg enters the gas phase and none leaves with the slag in IGCC cases, or bottom ash in PC cases. [13]

Exhibit 2-5. Probability distribution of mercury concentration in the Illinois No. 6 coal

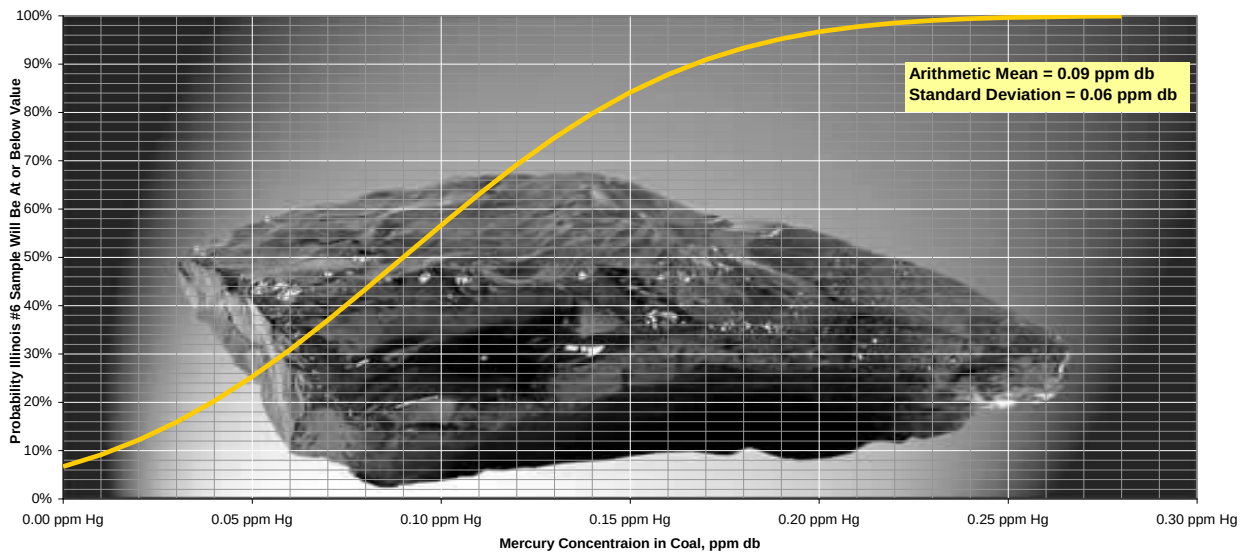

Fuel costs used in this report are specified according to the 2019 QGESS document "Fuel Prices for Selected Feedstocks in NETL Studies." [5] The current levelized coal price is $2.11/GJ ($2.23/MMBtu) on a higher heating value (HHV) basis for Illinois No. 6 bituminous coal delivered to the Midwest and reported in 2018 dollars. Fuel costs are levelized over an assumed 30-year plant operational period with an assumed on-line year of 2023.

2.3 NATURAL GAS CHARACTERISTICS

Natural gas is utilized as the fuel in Case B31A and Case B31B (NGCC with and without CO_2 capture), and its composition is presented in Exhibit 2-6. The natural gas properties are from

the 2019 revision of the QGESS document "Specification for Selected Feedstocks" [2] including the addition of methanethiol (mercaptan). [14]

The current levelized natural gas price is $4.19/GJ ($4.42/MMBtu) on an HHV basis, delivered to the Midwest, and reported in 2018 U.S. dollars.[e] Fuel costs are levelized over an assumed 30-year plant operational period with an assumed on-line year of 2023.

Exhibit 2-6. Natural gas composition

Component		Volume Percentage	
Methane	CH_4	93.1	
Ethane	C_2H_6	3.2	
Propane	C_3H_8	0.7	
n-Butane	C_4H_{10}	0.4	
Carbon Dioxide	CO_2	1.0	
Nitrogen	N_2	1.6	
Methanethiol[A]	CH_4S	5.75×10^{-6}	
	Total	100.0	
	LHV		**HHV**
kJ/kg (Btu/lb)	47,201 (20,293)		52,295 (22,483)
MJ/scm (Btu/scf)	34.52 (927)		38.25 (1,027)

[A]The sulfur content of natural gas is primarily composed of added Mercaptan (methanethiol [CH_4S]) with trace levels of hydrogen sulfide (H_2S) [14]
Note: Fuel composition is normalized, and heating values are calculated using Aspen

2.4 ENVIRONMENTAL TARGETS

2.4.1 Air Emissions Targets

Environmental targets were established for each of the technologies as follows:

- Hg and hydrochloric acid (HCl) limits were set by the March 2013 update to the Utility Mercury and Air Toxics Standards (MATS) for IGCC and PC technologies. [15], [16]
- Particulate matter (PM), sulfur dioxide (SO_2), and nitrogen oxide (NOx) limits were set by the February 2013 update to the New Source Performance Standards (NSPS) for all technologies. [16], [17]

The regulations differentiate between low rank and non-low rank coal types based on their heating value. Coals with an HHV of greater than 19,300 kJ/kg (8,300 Btu/lb) on a moist, mineral-matter free basis are considered non-low rank. Therefore, Illinois No. 6 coal, with an

[e] As specified in the 2019 QGESS document on "Fuel Prices for Selected Feedstocks in NETL Studies." [5]

HHV (moist, mineral-matter free) of 30,000 kJ/kg (12,900 Btu/lb), is considered a non-low rank coal.

The emission limits imposed by MATS and NSPS that apply to each technology in this report are provided in Exhibit 2-7.

Exhibit 2-7. MATS and NSPS emission limits for SO_2, NOx, PM, Hg, and HCl

Pollutant[A]	IGCC (lb/MWh-gross)	PC (lb/MWh-gross)	NGCC (lb/MWh-gross)
SO_2	0.40	1.00	0.90
NOx	0.70	0.70	0.43
PM (Filterable)	0.07	0.09	N/A
Hg	$3x10^{-6}$	$3x10^{-6}$	N/A
HCl	0.002	0.010	N/A

[A] Carbon monoxide (CO) emissions are reported for NGCC cases.

These new regulations apply to IGCC, PC, and NGCC technologies that begin construction after May 3, 2011. Furthermore, these regulations state that [16], [18]:

> *Fossil fuel* is defined as natural gas, oil, coal, and any form of solid, liquid, or gaseous fuel derived from such material.
>
> *Electric utility steam generating units (EGU)* are defined as a fossil fuel-fired combustion unit of more than 25 MWe that serves a generator that produces electricity for sale. A fossil fuel-fired unit that cogenerates steam and electricity and supplies more than one-third of its potential electric output capacity and more than 25 MWe output to any utility power distribution system for sale is considered an electric utility steam generating unit.
>
> *Fossil fuel-fired* means an EGU that is capable of combusting more than 25 MW of fossil fuels. To be capable of combusting fossil fuels, an EGU would need to have these fuels allowed in its operating permit and have the appropriate fuel handling facilities on-site or otherwise available (e.g., coal handling equipment, including coal storage area, belts and conveyers, pulverizers; oil storage facilities).
>
> *Coal-fired electric utility steam generating units* are defined as an EGU and meet the definition of "fossil fuel-fired," which is that it burns coal for more than 10 percent of the average annual heat input during any three consecutive calendar years or for more than 15 percent of the annual heat input during any one calendar year.
>
> *Integrated gasification combined cycle electric utility steam generating units* are defined as an EGU and meet the definition of "fossil fuel-fired," which is that it burns a synthetic gas derived from coal and/or solid oil-derived fuel for more than 10 percent of the average annual heat input during any three consecutive calendar years or for more than 15 percent of the annual heat input during any one calendar year in a combined-cycle combustion turbine. No solid coal or solid oil-derived fuel is directly burned in the unit during operation.

Unit designed for low-rank virgin coal subcategory is defined as any coal-fired EGU that is designed to burn, and that is burning, non-agglomerating virgin coal having a calorific value (moist, mineral matter-free basis) of less than 19,300 kJ/kg (8,300 Btu/lb) that is constructed and operates at or near the mine that produces such coal.

Unit designed for coal ≥ 19,300 kJ/kg (≥ 8,300 Btu/lb) subcategory is defined as any coal-fired EGU that is not a coal-fired EGU in the "unit designed for low rank virgin coal" subcategory.

Other regulations that could affect emissions limits from a new plant include the New Source Review (NSR) permitting process and Prevention of Significant Deterioration (PSD). The NSR process requires installation of emission control technology meeting either the Best Available Control Technology (BACT) determinations for new sources located in areas meeting ambient air quality standards (attainment areas) or Lowest Achievable Emission Rate (LAER) technology for sources located in areas not meeting ambient air quality standards (non-attainment areas). Environmental area designation varies by county and can be established only for a specific site location. Based on the Environmental Protection Agency's (EPA) Green Book Non-attainment Area Map, relatively few areas in the midwestern United States are classified as "non-attainment," so the plant site for this report was assumed to be in an attainment area. [17]

2.4.2 Water Emissions Targets

EPA issued updated Effluent Limitation Guidelines (ELG) and standards for the steam electric power generation point source category in November 2015, to strengthen controls on wastewater discharges.[f] [19] The ELG are national technology-based NSPS derived from data collected from industry. They are intended to provide flexibility in implementation through use of technologies already installed and operating in the power industry. The federal standards established by this rule are the minimum discharge standards. As ELG are enforced under the National Pollutant Discharge Elimination System [20], more stringent water quality-based standards may be established by the local permitting authority; however, these additional requirements were not considered in this report.

The final ELG rule established new wastewater categories and discharge limits and updated discharge requirements for existing wastewater categories. The following are the new or updated categories in the rule:

- Flue gas desulfurization (FGD) wastewater
- Fly ash transport water
- Bottom ash transport water
- Landfill leachate
- Flue gas mercury control wastewater
- Non-chemical metal cleaning wastewater

[f] In April 2017, EPA announced plans to reconsider the power plant ELG rule—as they apply to existing sources—and their intent to request a stay of the regulations, pending litigation. [20]

- Wastewater from gasification of fuels such as coal and petroleum coke

Non-chemical metal cleaning wastewater was established as a new wastewater category in the updated ELG. However, new limits were not established for this category; therefore, treatment of this stream has not been evaluated in this report.

The landfill of plant byproducts is assumed to be outside the scope of the plants considered in this study; therefore, landfill leachate is not evaluated in this report.

For the PC cases considered in this study, both fly ash and bottom ash handling systems are dry and do not result in a water stream requiring treatment under ELG. Similarly, the flue gas mercury control approach of combined sorbent injection followed by carbon injection does not generate a water stream for treatment. Therefore, only the FGD wastewater blowdown stream requires treatment in PC cases.

For the IGCC cases in this study, the gasification wastewater from the balance of plant is recycled within the gasification and syngas cleanup process, ultimately being utilized as makeup to the syngas scrubber. Therefore, only the syngas scrubber blowdown requires treatment in IGCC cases.

Intermittent discharges (e.g., chemical metal cleaning wastewater), coal pile runoff, low volume waste (e.g., boiler blowdown), and cooling tower blowdown were assumed to be compliant with all applicable regulations with no additional treatment beyond conventional considerations.

Under the assumptions established in this section, no additional control technology considerations are required for NGCC compliance with the ELG rule.

The applicable wastewater discharge limits for PC and IGCC cases are shown in Exhibit 2-8 and Exhibit 2-9, respectively.

Exhibit 2-8. New source treated FGD wastewater discharge limits [19]

Effluent Characteristic	Long-Term Average	Daily Maximum Limit	Monthly Average Limit[A]
Arsenic, ppb	4.0	4	-
Mercury, ppt	17.8	39	24
Selenium, ppb	5.0	5	-
Total Dissolved Solids, ppm	14.9	50	24

[A]Monthly Average Limit refers to the highest allowable average of daily discharges over 30 consecutive days.

Exhibit 2-9. New source treated gasification wastewater discharge limits [19]

Effluent Characteristic	Long-Term Average	Daily Maximum Limit	Monthly Average Limit[A]
Arsenic, ppb	4.0	4	-
Mercury, ppt	1.08	1.8	1.3
Selenium, ppb	147	453	227
Total Dissolved Solids, ppm	15.2	38	22

[A]Monthly Average Limit refers to the highest allowable average of daily discharges over 30 consecutive days.

For both the PC and IGCC wastewater treatment systems, the limits are applied at the discharge, prior to commingling with other plant water systems.

2.4.3 Study Cases

2.4.3.1 IGCC

Exhibit 2-10 provides the emissions limits for IGCC plants as well as a summary of the control technology utilized to satisfy the limits.

Exhibit 2-10. Environmental targets for IGCC cases [15] [16] [17]

Pollutant	(lb/MWh-gross)	Control Technology
SO_2	0.40	Selexol, Methyldiethanolamine (MDEA), or Sulfinol (depending on gasifier technology)[A]
NOx	0.70	Low NOx burners and syngas N_2 dilution
PM (Filterable)	0.07	Quench, water scrubber, and/or cyclones and candle filters (depending on gasifier technology)
Hg	$3x10^{-6}$	Dual carbon bed
HCl	0.002	Quench, water scrubber, sodium hydroxide treatment, SWS

[A]The sulfur control technologies are used to remove H_2S formed in the gasifier to ultimately limit SO_2 emissions after the syngas is combusted in the CT.

Based on published vendor literature, it was assumed that low NOx burners (LNBs) and nitrogen (N_2) dilution can achieve 15 ppmvd at 15 percent oxygen (O_2); this value was used for all cases. [21], [22]

The SO_2 limit is met via an AGR process, which captures sulfur as H_2S before it is oxidized to SO_2 later in the process train. COS hydrolysis is employed in non-capture cases to convert COS to the more capture-friendly compound H_2S, but not in capture cases where WGS is utilized and also serves to convert COS to H_2S. As the emissions limit is based on the gross power production of the plant, the actual removal efficiency is dependent on the net plant efficiency. Therefore, the required AGR H_2S removal efficiency varies from 75 to 98 percent in the cases without CO_2 capture. Vendor data on the AGR processes used in the non-capture cases indicate that the required level of sulfur removal in each technology is possible. The sulfur removal efficiency of the CO_2 capture cases is approximately 99.9 percent. The high rate of H_2S removal is a function of the CO_2 capture rate requirement (described in Section 2.4.4) of the two-stage Selexol process.

Most of the coal ash is removed from the gasifier as slag. The ash that remains entrained in the syngas is captured in the downstream equipment, including the syngas scrubber, cyclone, and either ceramic or metallic candle filters (E-Gas™ and Shell). Each combination of particulate control devices can achieve the environmental target.

The Eastman Chemical plant, where syngas from a GEP gasifier is treated, achieved a Hg removal efficiency of 95 percent. Sulfur-impregnated activated carbon is used by Eastman as the adsorbent in the packed beds operated at 30°C (86°F) and 6.2 MPa (900 psig). Hg removal between 90 and 95 percent has been reported with a bed life of 18–24 months. Removal efficiencies may be even higher, but, at 95 percent, the measurement precision limit was reached. Eastman has yet to experience any Hg contamination in its product. [23] As a Hg removal efficiency of up to 97 percent is required to meet the Hg emissions limit, a dual sulfur-impregnated carbon bed system (i.e., two beds in series) is required, which is capable of achieving greater than 99 percent Hg removal. It was assumed that the Hg removal efficiency is linearly related to bed depth; therefore, the bed depths were chosen to meet the emission limit.

The HCl is removed primarily (96 percent or greater) in the syngas scrubber and reacted with sodium hydroxide (NaOH) to form sodium chloride (NaCl). The remaining chloride in the syngas eventually drops out with condensed water downstream.

Exhibit 2-11 provides the water discharge limits for IGCC plants, and a brief description of the control technology utilized to satisfy the limits follows.

Exhibit 2-11. Water discharge targets for IGCC cases [19]

Effluent Characteristic	Long-term Average	Daily Maximum Limit	Monthly Average Limit[A]
Arsenic, ppb	4.0	4	-
Mercury, ppt	1.08	1.8	1.3
Selenium, ppb	147	453	227
Total Dissolved Solids, ppm	15.2	38	22

[A]Monthly Average Limit refers to the highest allowable average of daily discharges over 30 consecutive days.

The gasification wastewater from the balance of plant is recycled within the gasification and syngas cleanup process, ultimately being utilized as makeup to the syngas scrubber. Therefore, all streams detailed in the updated ELG are included in the syngas scrubber blowdown and can be treated by a single system. The blowdown from the syngas scrubber is sent to a process water treatment plant, as discussed in Section 3.1.12, where a brine concentrator and crystallizer sequentially increase the concentration of NaCl through evaporation until a solid precipitate is formed, which is separated from the stream in a centrifuge. The treated streams are mixed with other process water in the process water drum and utilized throughout the plant as makeup water.

2.4.3.2 PC

Exhibit 2-12 provides the emissions limits for PC plants as well as a summary of the control technology utilized to satisfy the limits.

Exhibit 2-12. Environmental targets for PC cases [15] [16] [17]

Pollutant	PC (lb/MWh-gross)	Control Technology
SO_2	1.00	Wet limestone scrubber
NOx	0.70	Low NOx burners, overfire air and SCR
PM (Filterable)	0.09	Fabric filter
Hg	$3x10^{-6}$	Co-benefit capture, dry sorbent injection[A], activated carbon injection
HCl	0.010	SO_2 surrogate[B]

[A]Limits sulfur trioxide (SO_3) levels and their detrimental effects on activated carbon injection.
[B]SO_2 may be utilized as a surrogate for HCl measurement if the EGU utilizes wet FGD. [24]

It was assumed that LNBs and staged overfire air (OFA) would limit NOx production to 0.15 kg/GJ (0.35 lb/MMBtu) and that selective catalytic reduction (SCR) technology would be 75–79 percent efficient. By adjusting the NH_3 flow rate and/or catalyst bed depth in the SCR, the NOx emissions limit was able to be met exactly.

The wet limestone scrubber was assumed to be 98 percent efficient, which results in SO_2 emissions below the NSPS SO_2 limit. Current technology allows wet FGD removal efficiencies in excess of 99 percent, but based on NSPS requirements, such high removal efficiency is not necessary.

The fabric filter was assumed to be capable of achieving an efficiency of greater than 99.9 percent. As the required efficiency was approximately 99.9 percent for each case, the efficiency was varied in order to meet the PM emissions limit exactly.

The Hg removal efficiency required to meet the emission limit is approximately 97 percent in each case. It was assumed that the total Hg removal rate resulting from the combination of pollution control technologies used (SCR, dry sorbent injection [DSI], activated carbon injection [ACI], fabric filters, and FGD) would meet the limit exactly. DSI is required to limit the effects of SO_3 on Hg capture due to the high sulfur content of the coal in this study. Section 4.1.6 provides a detailed discussion regarding Hg removal and the various systems involved.

Exhibit 2-13 provides the water discharge limits for PC plants, and a brief description of the control technology utilized to satisfy the limits follows.

Exhibit 2-13. Water discharge targets for PC cases [19]

Effluent Characteristic	Long-term Average	Daily Maximum Limit	Monthly Average Limit[A]
Arsenic, ppb	4.0	4	-
Mercury, ppt	17.8	39	24
Selenium, ppb	5.0	5	-
Total Dissolved Solids, ppm	14.9	50	24

[A]Monthly Average Limit refers to the highest allowable average of daily discharges over 30 consecutive days.

A spray dryer is a technology commonly used in the power industry for FGD, which can be applied as a thermal evaporation process to treat wastewater. The feasibility of using a spray dryer evaporator as the sole treatment system in PC cases is limited by the flow rate of wastewater, as the cost and performance impact of the spray dryer increases with increasing wastewater flow rate. Section 4.1.10 provides a detailed discussion regarding the spray dryer as applied to the PC cases in this report.

2.4.3.3 NGCC

Exhibit 2-14 provides the emissions limits for NGCC plants as well as a summary of the control technology utilized to satisfy the limits.

Exhibit 2-14. Environmental targets for NGCC cases [15] [16] [17]

Pollutant	NGCC (lb/MWh-gross)	Control Technology
SO_2	0.90	Low sulfur content fuel
NOx	0.43	Dry low NOx burners and SCR
PM (Filterable)	N/A	N/A
Hg	N/A	N/A
HCl	N/A	N/A

The NGCC cases were designed to achieve approximately 1.8 ppmv NOx emissions (referenced to 15 percent O_2) through the use of a dry low NOx (DLN) burner in the combustion turbine-generator (CTG)—the DLN burners reduce the emissions to about 9 ppmvd [25] (referenced to 15 percent O_2)—and an SCR. [26]

While a state-of-the-art 2017 F-class CT alone produces NOx emissions below the limit shown in Exhibit 2-14, an SCR was included to ensure the plant met EPA's PSD program by installing BACT. The SCR system is designed for 85–87 percent NOx reduction while firing natural gas.

The total sulfur content of natural gas is typically limited by contract terms and industry practice to between 0.25 and 1.00 gr/100 scf with the average total sulfur content being 0.34 gr/100 scf. [14] For this report, the natural gas was assumed to contain the average value of total sulfur of 0.34 gr/100 scf (4.71×10^{-4} lb-S/MMBtu). It was also assumed that the added mercaptan (CH_4S) was the sole contributor of sulfur to the natural gas. The CH_4S concentration of the natural gas is provided in Exhibit 2-6 as 5.75×10^{-6} percent by mole (mol%) (7.06×10^{-4} lb-CH_4S/MMBtu).

The natural gas sulfur content results in SO_2 emissions for the non-capture case of 0.006 lb/MWh-gross. The CO_2 capture system removes virtually all SO_2 from the flue gas, resulting in zero (reported) emissions in the capture case.

The pipeline natural gas was assumed to contain no PM, Hg, or HCl.

Under the assumptions established in Section 2.4.2, no additional control technology considerations are required for compliance with the ELG rule.

2.4.4 Carbon Dioxide

EPA promulgated a New Source Performance Standard on October 23, 2015, for emissions of CO_2 for new fossil fuel-fired electric utility generating units. [27] The limit set by the regulation was 1,000 lb-CO_2/MWh-gross for NGCC, and 1,400 lb-CO_2/MWh-gross for PC and IGCC plants. As of the publication of this report, EPA has proposed changes that increase the CO_2 emissions limit for the PC and IGCC plants considered in this study to 1,900 lb-CO_2/MWh-gross. [28] The changes do not impact the previously established emissions limit for NGCC plants.

For the IGCC cases that have CO_2 capture, the basis is a nominal 90 percent carbon removal rate based on carbon input from the coal and excluding carbon that exits the gasifier with the slag. In the GEP and Shell cases, this was accomplished by using two WGS reactors in series to convert CO to CO_2 and a two-stage Selexol process with a CO_2 removal efficiency of 93.6 percent, a removal rate that was supported by vendor quotes. All gasifiers, except E-Gas™, achieve a nominal carbon removal rate of 90 percent. In the E-Gas™ case, a third shift reactor was added to increase the CO conversion because the relatively high amount of methane (CH_4) present in the syngas (1.61 percent by volume [vol%] compared to 0.09 vol% in the GEP Radiant gasifier and 0.03 vol% in the Shell gasifier) would otherwise prevent this case from achieving the target of 90 percent carbon capture. The IGCC cases with CO_2 capture report CO_2 emissions ranging from 151 to 163 lb-CO_2/MWh-gross, and the non-capture cases report CO_2 emissions ranging from 1,328 to 1,396 lb-CO_2/MWh-gross.

The PC and NGCC cases both assume that all fuel-based carbon that is combusted (i.e., excluding unburned carbon in PC cases) and converted to CO_2 in the flue gas. Carbon dioxide is also generated from limestone in the FGD system. The CO_2 capture plant design is for 90 percent capture of the CO_2 exiting the FGD system, resulting in emissions of 185–193 lb-CO_2/MWh-gross and 80 lb-CO_2/MWh-gross gross for PC and NGCC plants, respectively. The analogous non-capture plants report CO_2 emissions of 1,627–1,691 lb-CO_2/MWh-gross for PC cases, and 741 lb-CO_2/MWh-gross for the NGCC case.

2.5 CAPACITY FACTOR

2.5.1 Capacity Factor Assumptions

Availability is the percent of time during a specific period that a generating unit is capable of producing electricity. This report assumes that each new plant would be dispatched any time it is available and would be capable of generating the nameplate capacity when online. Therefore, the capacity factor (CF) and availability are equal. The operating period selected is also important. The calculations assume that the CF and availability are constant over the life of the plant, but in actual operation may require that a plant have a higher peak availability to counter lower availability in the first several years of operation.

2.5.2 Existing Plant Data

The North American Electric Reliability Council (NERC) Generating Availability Data System (GADS) [29] provides information on existing plants (e.g., Generating Analysis Reports,

Generating Availability Reports, Generating Unit Statistical Brochure, Historical Availability Statistics). These data for coal plants (e.g., PC, CFB, and IGCC technology) include average availability and plant CF data, by fuel type and plant capacity.

The GADS database provides data on many plant operating characteristics. Two metrics are used in this report to evaluate existing plant availability and CFs (availability factor [AF] and equivalent availability factor [EAF]). The metrics are defined by the following equations.

$$AF = \frac{PH - (POH + FOH + MOH)}{PH}$$

Where:

PH – Period Hours (number of hours a unit was in the active state)

POH – Planned Outage Hours (sum of all hours experienced during Planned Outages and Planned Outage Extensions [the extension of maintenance or planned outage beyond initial Planned Outages])

FOH – Forced Outage Hours (sum of all hours experienced during Forced Outages)

MOH – Maintenance Outage Hours (sum of all hours experienced during Maintenance Outages and Maintenance Outage Extensions [the extension of Maintenance Outages])

$$EAF = \frac{(PH - (POH + FOH + MOH)) - (EUDH + EPDH + ESEDH)}{PH}$$

Where:

EUDH – Equivalent Unplanned Derated Hours (the product of Unplanned Derated Hours [sum of all hours during Forced Deratings] and Size of Reduction [megawatts of derate], divided by Net Maximum Capacity [unit net megawatt output without derating])

EPDH – Equivalent Planned Derated Hours (the product of Planned Derated Hours [sum of all hours experienced during Planned Deratings and Scheduled Derating Extensions] and Size of Reduction, divided by Net Maximum Capacity)

ESEDH – Equivalent Seasonal Derated Hours (Net Maximum Capacity less Net Dependable Capacity [equivalent to the Net Maximum Capacity modified for seasonal limitations], multiplied by Available Hours [sum of all Service Hours, Reserve Shutdown Hours, Pumping Hours, and Synchronous Condensing Hours] and divided by Net Maximum Capacity)

The EAF is essentially a measure of the plant CF, assuming there is always a demand for the output. The EAF accounts for planned and scheduled derated hours as well as seasonal derated hours. As such, the EAF matches this report's definition of CF.

2.5.3 Capacity Factor for Coal Units without Carbon Capture

Exhibit 2-15 presents GADS "coal primary" EAF data from the Units Reporting Events data files for the years 2011, 2014, 2015, and 2016. The number of generating units included in the 2011 and 2016 data is presented in Exhibit 2-16. As previously noted, the EAF is a representation of this study's definition of CF.

Exhibit 2-15. Coal unit equivalent availability factor

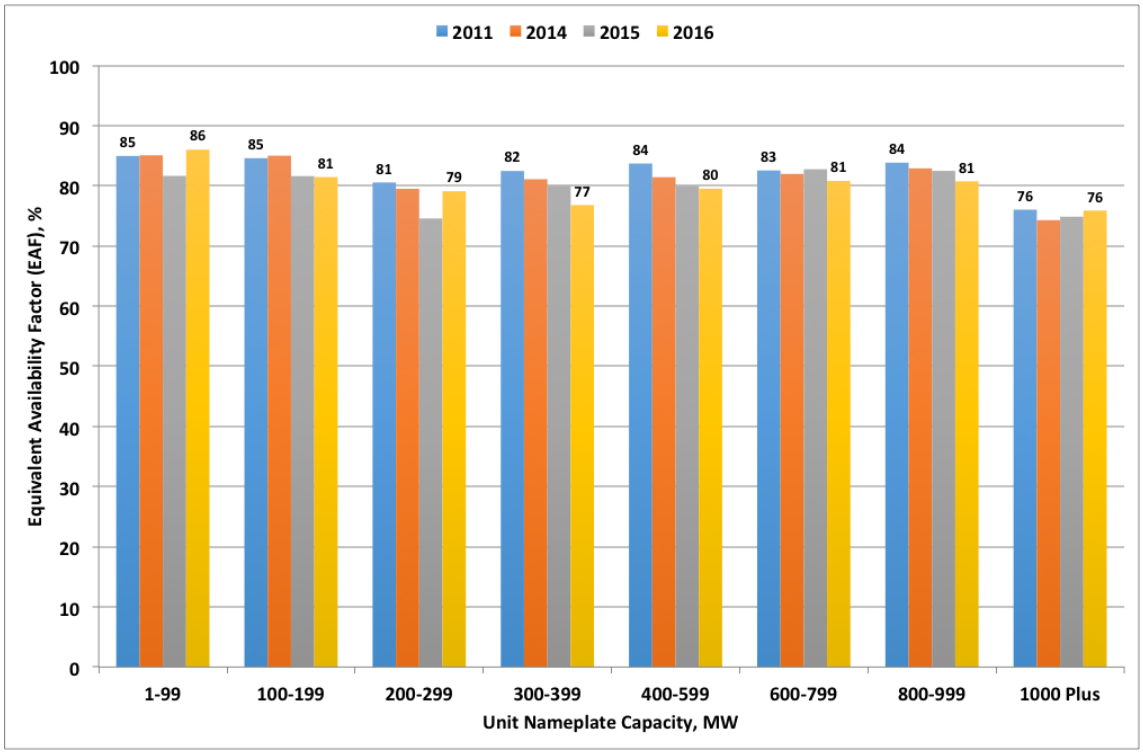

Exhibit 2-16. Number of coal units reporting in the 2011 and 2016 data

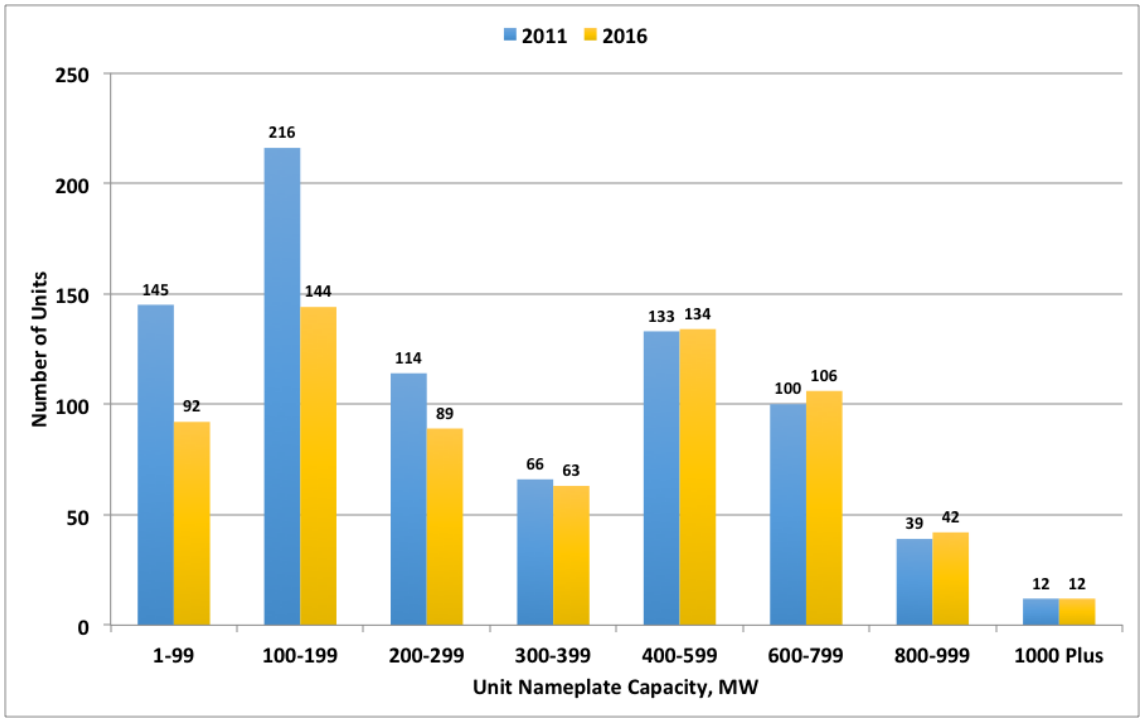

Exhibit 2-17 presents the GADS AF data for the same years (2011 through 2016).

Exhibit 2-17. Coal unit availability factor

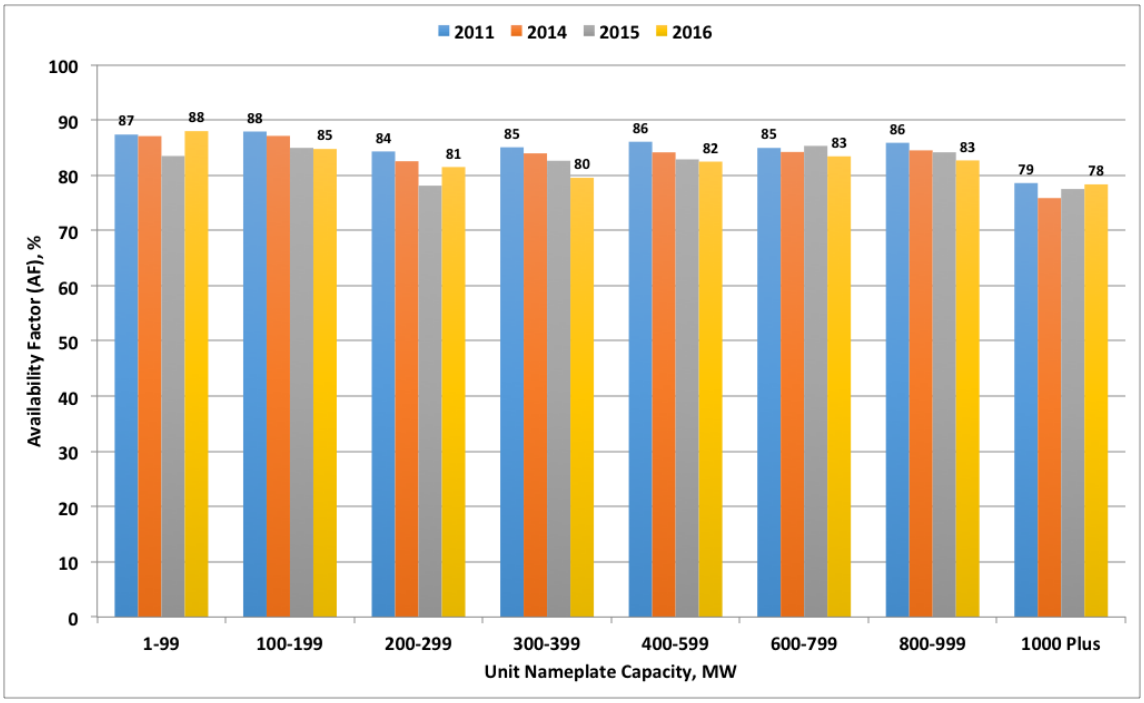

The baseline study net PC unit capacity is 650 MW. The average EAF for coal-fired plants in the 600–799 MW size range was 83 percent in 2011 and declined to 81 percent in 2016.

While the assumption for this report is that a unit will be dispatched when it is available, it is useful to have perspective on the ability of coal units, and plants, to achieve high CFs. Exhibit 2-18 presents coal plants, with capacities greater than 300 MW, that achieved high CFs in 2017. [30]

Exhibit 2-18. Reported high capacity factor coal units

Plant Name	Owner	State	Capacity, MW	Capacity Factor, %	Heat Rate, Btu/kWh
Dry Fork Station	Basin Electric	WY	393	94	10,593
Oak Grove	Luminant	TX	1,665	92	10,341
Twin Oaks	Luminant	TX	306	89	11,529
Milton R. Young	Minnkota Power Coop	ND	688	88	11,507
Wyodak	BHE	WY	336	87	12,249
Bonanza	Deseret G&T	UT	458	85	9,795
Rush Island	Ameren	MO	1,201	84	10,207
John W. Turk Jr.	SWEPCO	AR	609	83	9,089

In 2017 the top twenty coal plants, irrespective of nameplate capacity, achieved CFs in excess of 82 percent, with the top fifteen units achieving CFs of 85 percent or higher. [30]

The GADS data show an average coal unit availability for all unit sizes greater than 80 percent and the 2017 plant level data show that coal units have demonstrated CFs greater than 85 percent. The current study costs are based on mature plant technology and market conditions that enable baseload operation. Based on a review of the available data, an 85 percent CF is selected for the PC coal units.

2.5.4 Capacity Factor for IGCC Plants

The Electric Power Research Institute (EPRI) has reported an availability goal for IGCC plants of 85 percent. [31] Plants built before 2000 have achieved availability of 80 percent for limited periods. Common projections from technology suppliers and EPRI are that IGCC plants are capable of 80–85 percent availability without a spare gasifier and could achieve greater than 90 percent availability with a spare gasifier. [32], [33], [34], [35], [36], [37] While an availability of 85 percent is the goal, given the IGCC technology experience and the commercialization status compared with the more conventional plants (e.g., PC), a CF of 80 percent was selected for IGCC plants with no spare gasifier.

2.5.5 Capacity Factor for NGCC Plants

Similar data as used for coal units were reviewed for NGCC units. The GADS database reports an AF of 87.8 percent for 160 NGCC units in 2011, and the same AF value for 277 NGCC units in 2016. The EAF reported for NGCC units in 2011 is 84.0 percent, and in 2016 the EAF increased to 85.2 percent. [29] In 2017 the top twenty NGCC plants achieved CFs in excess of 85 percent, with an average CF of 89 percent. [30] An 85 percent CF is selected for NGCC plants.

2.5.6 Capacity Factor for Plants with Carbon Capture

The addition of carbon capture and storage adds extra equipment to the power plant. Preliminary reliability analyses show small reductions in reliability if the reliability of the base plant components is kept constant. A solvent-based carbon capture technology is used in this report for all capture configurations. The capture and CO_2 compression technologies have commercial operating experience, albeit at smaller scale in the case of solvent systems, with demonstrated ability for high reliability. Given the report basis and use of commercial technology, the assumption is made that the CFs for a given plant with and without carbon capture are the same. Thus, the CF for IGCC plants with capture is 80 percent; the CF for PC and NGCC plants with capture is 85 percent.

2.5.7 Perspective

Reported unit data and reported plant experience support the capability to achieve the selected AFs for the plants. Important factors required to achieve these availability projections include a quality plant design that utilizes lessons learned from similar plant designs, a focus on life cycle costs, a smart predictive maintenance program with sufficient maintenance budget, a trained

plant staff, and an economic demand for unit power. An illustration of lessons learned and the resulting high plant availability that can be obtained is reported by Richwine. [38]

Plant availability is determined by the plant technology, the capital cost invested in the plant (e.g., what is the design approach with respect to minimizing scheduled and unplanned maintenance), the maintenance requirements, the operating profile of the plant, and the customer requirements for the electricity (e.g., customer costs due to a unit not being available). Since the unavailability cost will decrease with increasing unit availability and the maintenance and capital costs increase with increasing unit availability, there will be an optimum economic unit availability for a given application. This report assumes that the plant design, plant maintenance, and electricity demand are consistent with the selected availability. Black & Veatch review of the maintenance allocation for the plants considered concluded that it was in accordance with expected maintenance allocations for comparable units in terms of the specified sizes and CF. It is acknowledged that fewer fossil energy plants operate baseloaded in today's energy markets; however, the objective of the report is to compare technologies based on their performance and cost merits without imposing market forces that would impact CF.

The existing plant data have not been analyzed with regard to the performance of individual plant availability over the life of the plant. As stated, this report assumes a constant availability of 80 percent for IGCC and 85 percent for PC and NGCC each year over the life of the plant. It is recognized that the availability of a given plant will vary over the life of the plant. As demonstrated by existing plant data, coal plants can be designed and operated with yearly availability ranging from 85 to 100 percent. It is assumed that the plants in this report will have yearly AFs above and below the selected value with the effective or levelized availability for the life of the plant being the selected value. The sensitivity of LCOE to CF is plotted in Exhibit 6-15.

2.6 Raw Water Withdrawal and Consumption

A water balance was performed for each case on the major water consumers in the process. The total water demand for each subsystem was determined, and internal recycle water available from various sources like condensate from syngas (in IGCC CO_2 capture cases), or from flue gas (in PC CO_2 capture cases) was applied to offset the water demand. The difference between demand and recycle is raw water withdrawal. Raw water withdrawal is the water removed from the ground or diverted from a municipal source for use in the plant. Raw water consumption is also accounted for as the portion of the raw water withdrawn that is evaporated, transpired, incorporated into products, or otherwise not returned to the water source from which it was withdrawn.

Raw water makeup was assumed to be provided 50 percent by a publicly-owned treatment works (POTW) and 50 percent from groundwater. Raw water withdrawal is defined as the water metered from a raw water source and used in the plant processes for all purposes, such as cooling tower makeup, boiler feedwater (BFW) makeup, slurry preparation makeup, syngas humidification, quench system makeup, and FGD system makeup, depending on the technology examined. The difference between withdrawal and process water returned to the source is consumption. Consumption represents the net impact of the process on the water source.

BFW blowdown and ASU knockout were assumed to be treated and recycled to the cooling tower. The cooling tower blowdown was assumed to be treated and 90 percent returned to the water source.

The largest consumer of raw water in all cases is cooling tower makeup. It was assumed that all cases utilized a mechanical draft, evaporative cooling tower. The design ambient wet bulb temperature of 11°C (51.5°F) (Exhibit 2-1 and Exhibit 2-2) was used to achieve a cooling water temperature of 16°C (60°F) using an approach of 5°C (8.5°F). The cooling water range was assumed to be 11°C (20°F). The cooling tower makeup rate was determined using the following [39]:

- Evaporative losses of 0.8 percent of the circulating water flow rate per 5.5°C (10°F) of range
- Drift losses of 0.001 percent of the circulating water flow rate
- Blowdown losses (BDL) were calculated as follows:

$$BDL = \frac{EL}{CC - 1}$$

Where:

EL – Evaporative Losses

CC – Cycles of concentration

The cycles of concentration are a measure of water quality and a mid-range value of four was chosen for this report.

The water balances presented in subsequent sections include the water demand of the major water consumers within the process, the amount provided by internal recycle, the amount of raw water withdrawal by difference, the amount of process water returned to the source, and the raw water consumption, again by difference.

2.7 COST ESTIMATING METHODOLOGY

Detailed information pertaining to topics such as contracting strategy; engineering, procurement, and construction (EPC) contractor services; estimation of capital cost contingencies; owner's costs; cost estimate scope; economic assumptions; finance structures; and LCOEs are available in the 2019 revision of the QGESS document "Cost Estimation Methodology for NETL Assessment of Power Plant Performance." [4] Select portions are repeated in this report for completeness.

<u>Capital Costs</u>:

The capital cost estimates documented in this report reflect different uncertainty ranges depending on the technology considered as shown in Exhibit 2-19.

Exhibit 2-19. Capital cost uncertainty ranges

Technology	Uncertainty Range	AACE Classification
IGCC	-25/+50	Class 5
PC	-15/+30	Class 4
NGCC	-15/+25	Class 4

IGCC cases carry an uncertainty range of -25 percent/+50 percent, consistent with Association for the Advancement of Cost Engineering (AACE) Class 5 cost estimates (i.e., feasibility study) [4] [9] [10], based on the level of engineering design performed. This range is deemed reflective of recent commercial power IGCC experience. PC and NGCC cases carry smaller uncertainty ranges, and both fall within AACE Class 4 estimates. Given recent experience with NGCC plants, the NGCC uncertainty range is slightly smaller than PC. In all cases, this report intends to represent the next commercial offering and relies on vendor cost estimates for component technologies. It also applies process contingencies at the appropriate subsystem levels in an attempt to account for expected but undefined costs, which can be a challenge for emerging technologies.

Costs of Mature Technologies and Designs:

The cost estimates for plant designs that only contain fully mature technologies, which have been widely deployed at commercial scale (e.g., PC and NGCC power plants without CO_2 capture), reflect NOAK on the technology commercialization maturity spectrum. The costs of such plants have dropped over time due to "learning by doing" and risk reduction benefits that result from serial deployments as well as from continuing research and development (R&D).

Costs of Emerging Technologies and Designs:

The cost estimates for plant designs that include technologies that are not yet fully mature (e.g., IGCC plants and any plant with CO_2 capture) use the same cost estimating methodology as for mature plant designs, which does not fully account for the unique cost premiums associated with the initial, complex integrations of emerging technologies in a commercial application. Thus, it is anticipated that early deployments of IGCC plants—both with and without CO_2 capture—as well as PC and NGCC plants with CO_2 capture, may incur costs higher than those reflected within this report.

Other Factors:

Actual reported project costs for all the plant types are also expected to deviate from the cost estimates in this report due to project- and site-specific considerations (e.g., contracting strategy, local labor costs, seismic conditions, water quality, financing parameters, local environmental concerns, weather delays) that may make construction more costly. Such variations are not captured by the reported cost uncertainty.

Future Cost Trends:

Continuing research, development, and demonstration (RD&D) is expected to result in designs that are more advanced than those assessed by this report, leading to costs that are lower than those estimated here.

2.7.1 Capital Costs

As illustrated in Exhibit 2-20, this report defines capital cost at five levels: BEC, EPCC, TPC, TOC, and TASC. BEC, EPCC, TPC, and TOC are "overnight" costs and are expressed in "base-year" dollars. The base year is the first year of capital expenditure. TASC is expressed in mixed, current-year dollars over the entire capital expenditure period, which is assumed in most NETL studies to last five years for coal plants and three years for natural gas plants.

The Bare Erected Cost (BEC) comprises the cost of process equipment, on-site facilities and infrastructure that support the plant (e.g., shops, offices, labs, road), and the direct and indirect labor required for its construction and/or installation. The cost of EPC services and contingencies are not included in BEC.

The Engineering, Procurement and Construction Cost (EPCC) comprises the BEC plus the cost of services provided by the EPC contractor. EPC services include: detailed design, contractor permitting (i.e., those permits that individual contractors must obtain to perform their scopes of work, as opposed to project permitting, which is not included here), and project/construction management costs.

The Total Plant Cost (TPC) comprises the EPCC plus project and process contingencies.

The Total Overnight Cost (TOC) comprises the TPC plus all other overnight costs, including owner's costs. TOC does not include escalation during construction or interest during construction.

The Total As-Spent Cost (TASC) is the sum of all capital expenditures as they are incurred during the capital expenditure period including their escalation. TASC also includes interest during construction, comprising interest on debt and a return on equity.

Exhibit 2-20. Capital cost levels and their elements

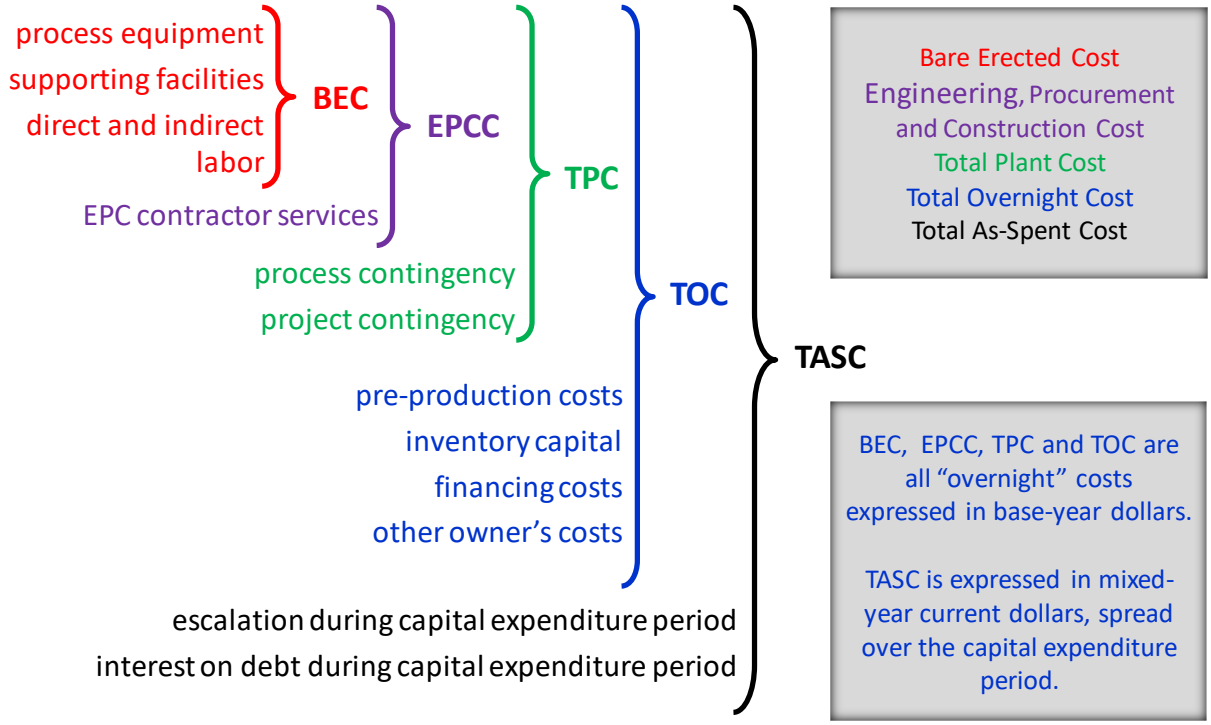

2.7.1.1 Cost Estimate Basis and Classification

The TPC and operation and maintenance (O&M) costs for each of the cases in the report were estimated by Black & Veatch using an in-house database and conceptual estimating models. Costs were further calibrated using a combination of adjusted vendor-furnished data and scaled estimates from previous design/build projects.

2.7.1.2 System Code-of-Accounts

The costs are grouped according to a process/system-oriented code of accounts. This type of code-of-account structure has the advantage of grouping all reasonably allocable components of a system or process, so they are included in the specific system account. (This would not be the case had a facility, area, or commodity account structure been chosen instead).

2.7.1.3 Estimate Scope

The estimates represent a complete power plant facility on a generic site. The plant boundary limit is defined as the total plant facility within the "fence line" including coal receiving and water supply system but terminating at the high voltage side of the main power transformers. CO_2 transport and storage (T&S) cost is not included in the reported capital cost or O&M costs but is treated separately and added to the LCOE.

2.7.1.4 Capital Cost Assumptions

Black & Veatch developed the capital cost estimates for each plant using the company's in-house database and conceptual estimating methodology for each of the specific technologies.

This database and approach are maintained by Black & Veatch as part of a commercial power plant design base of experience for similar equipment in the company's range of power and process projects. A reference bottom-up estimate for each major component provides the basis for the estimating models.

Other key estimate considerations include the following:

- Labor costs are based on Midwest, Merit Shop. The estimating models are based on a U.S. Gulf Coast location and the labor cost has been factored to a Midwest location. Labor cost data were sourced from recent projects and proprietary Black & Veatch in-house references/cost databases.
- The estimates are based on a competitive bidding environment, with adequate skilled craft labor available locally.
- Labor is based on a 50-hour work-week (5-10s). No additional incentives such as per-diem allowances or bonuses have been included to attract craft labor.
- While not included at this time, labor incentives may ultimately be required to attract and retain skilled labor depending on the amount of competing work in the region, and the availability of skilled craft in the area at the time the projects proceed to construction.
- The estimates are based on a greenfield site.
- The site is considered to be Seismic Zone 1, relatively level, and free from hazardous materials, archeological artifacts, or excessive rock. Soil conditions are considered adequate for spread footing foundations. The soil bearing capability is assumed adequate such that piling is not needed to support the foundation loads.
- Engineering and Construction Management are estimated based on Black & Veatch's historical experience in designing and building power projects. The cost, as a percentage of BEC, varies by technology; 15 percent for IGCC, 17.5 percent for PC, and 20 percent for NGCC. The percentages were selected such that the final total cost calculated is representative of Black & Veatch's historical engineering/construction management costs for similar plant types. These costs consist of all home office engineering and procurement services as well as field construction management costs. Site staffing generally includes construction manager, resident engineer, scheduler, and personnel for project controls, document control, materials management, site safety, and field inspection.

2.7.1.5 Price Fluctuations

During the writing of this report, the prices of equipment and bulk materials fluctuated as a result of various market forces. Some reference quotes pre-dated the 2018-year cost basis while others may be considered more historical. All vendor quotes used to develop these estimates were adjusted to December 2018 dollars accounting for the price fluctuations. Price indices, e.g., The Chemical Engineering Plant Cost Index [40] and the Gross Domestic Product Chain-type Price Index [41], were used as needed for these adjustments. While these overall

indices are nearly constant, it should be noted that the cost of individual equipment types may still deviate from the December 2018 reference point.

2.7.1.6 Cross-comparisons

In technology comparison studies, the relative differences in costs are often more significant than the absolute level of TPC. This requires cross-account comparison between technologies to review the consistency of the cost trends.

In performing such a comparison, it is important to reference the technical parameters for each item, as these are the basis for establishing the costs. Scope or assumption differences can quickly explain any apparent anomalies. There are a number of cases where differences in design philosophy occur. Some key examples are:

- The IGCC CT account in the GEP cases includes a syngas expander, which is not required for the E-Gas™ or Shell cases.
- The IGCC CTs for the capture cases include an additional cost for firing a high-H_2 content fuel.
- The Shell gasifier syngas cooling configuration is different between the CO_2-capture and non-CO_2-capture cases, resulting in a significant differential in thermal duty between the syngas coolers for the two cases.
- In PC cases, the Cansolv unit includes a pre-scrubber tower to reduce flue gas SO_2 content to 2 ppmv to limit solvent degradation. In NGCC cases, there is little SO_2 present in the flue gas, and thus, a pre-scrubber is not required, or included in the NGCC Cansolv capital cost.

2.7.1.6.1 Process Contingency

Process contingencies were applied to the IGCC estimates in this report, with justification provided, as follows:

- Gasifiers and Syngas Coolers: 14 percent on all cases—next-generation commercial offering and integration with the power island
- Two-Stage Selexol: 20 percent on all capture cases—unproven technology at commercial scale in IGCC service
- Mercury Removal: 5 percent on all cases—minimal commercial scale experience in IGCC applications
- CTG: 5 percent on all non-capture cases—syngas firing; 10 percent on all capture cases—high-H_2 firing
- Instrumentation and Controls: 5 percent on most accounts—integration issues

Process contingencies were applied to the PC and NGCC estimates in this report as follows:

- Cansolv System: 17 percent on PC capture cases; 18 percent on NGCC capture cases—post-combustion capture process unproven at commercial scale for power plant applications
- Instrumentation and Controls: 5 percent on most line-items in the PC and NGCC capture cases—integration issues

2.7.1.7 Owner's Costs

Detailed explanation of the owner's costs is available in the 2019 revision of the QGESS document "Cost Estimation Methodology for NETL Assessment of Power Plant Performance." [4] Owner's costs are split into three categories: pre-production costs, inventory capital, and other costs.

Pre-production allocations are expected to carry the specific plants through substantial completion, and to commercial operation. Substantial completion is intended to represent the transfer point of the facility from the EPC contractor (development entity) to the end user or owner, and is typically contingent on mutually acceptable equipment closeout, successful completion of facility-wide performance testing, and full closeout of commercial items.

Two examples of what could be included in the "other" owner's costs are rail spur and switch yard costs. Rail spur costs would only be applied to the IGCC and PC cases; however, the switch yard costs would be included in all cases.

Switch yard costs are dependent on voltage, configuration, number of breakers, layout, and air-insulated versus gas-insulated. As a rule of thumb, a 345-kV switchyard (air-insulated, ring bus) would cost roughly $850,000 per breaker.

On-site only rails (excludes long runs) would be expected to cost in the range of $850,000 to $950,000 per mile (relatively flat level terrain) plus the costs of any switches/turnouts (approximately $50,000 each) and road crossings (approximately $300 per linear foot).

2.7.2 Operation and Maintenance Costs

The production costs or operating costs and related maintenance expenses (O&M) pertain to those charges associated with operating and maintaining the power plants over their expected life. These costs include:

- Operating labor
- Maintenance – material and labor
- Administrative and support labor
- Consumables
- Fuel
- Waste disposal
- Co-product or by-product credit (that is, a negative cost for any by-products sold)

There are two components of O&M costs: fixed O&M, which is independent of power generation, and variable O&M, which is proportional to power generation. Taxes and insurance are included as fixed O&M costs, totaling 2 percent of the TPC.

2.7.2.1 Operating Labor

Operating labor cost was determined based on the number of operators required for each technology. The average base labor rate used to determine annual cost is $38.50/hour. The associated labor burden is estimated at 30 percent of the base labor rate.

2.7.2.2 Maintenance Material and Labor

Maintenance cost was evaluated on the basis of relationships of maintenance cost to initial capital cost. This represents a weighted analysis in which the individual cost relationships were considered for each major plant component or section.

2.7.2.3 Administrative and Support Labor

Labor administration and overhead charges are assessed at a rate of 25 percent of the burdened O&M labor.

2.7.2.4 Consumables

The cost of consumables, including fuel, was determined on the basis of individual rates of consumption, the unit cost of each specific consumable commodity, and the plant annual operating hours.

Quantities for major consumables such as fuel and sorbent were taken from technology-specific energy and mass balance diagrams developed for each plant application. Other consumables were evaluated on the basis of the quantity required using reference data.

The quantities for initial fills and daily consumables were calculated on a 100 percent operating capacity basis. The annual cost for the daily consumables was then adjusted to incorporate the annual plant operating basis, or CF.

Initial fills of the consumables, fuels, and chemicals may be accounted for directly in the O&M tables or included with the equipment pricing in the capital cost. Where applicable, the O&M tables state where this cost is included on a case-by-case basis.

2.7.2.5 Waste Disposal

Waste quantities and disposal costs were determined/evaluated similarly to the consumables. In prior iterations of this report, the disposal cost for catalyst and chemicals was assumed to be included in the unit replacement cost, and thus, not explicitly shown. Only major waste streams, such as slag, or fly and bottom ash, were reported. In the current revision, chemical and catalyst waste streams are individually reported, in addition to others. Waste disposal costs were separated into two categories: non-hazardous and hazardous waste. Non-hazardous waste is disposed of at a rate of $41.90/tonne ($38.00/ton). Hazardous waste is disposed of at a rate of $88.20/tonne ($80/ton).

2.7.2.6 Co-Products and By-Products

By-product quantities were also determined similarly to the consumables. However, due to the variable marketability of these by-products, specifically gypsum and sulfur, no credit was taken for their potential salable value.

It should be noted that by-product credits and/or disposal costs could potentially be an additional determining factor in the choice of technology for some companies and in selecting some sites. A high local value of the product can establish whether added capital should be included in the plant costs to produce a particular co-product. Slag is a potential by-product in certain markets. Similarly, ash may also be a potential by-product in certain markets; however, due to the ACI in the PC cases, the fly ash may not be marketable. As stated above, these material streams are considered waste in this report with a concomitant disposal cost.

2.7.3 CO_2 Transport and Storage

The cost of CO_2 T&S in a deep saline formation is estimated using the Fossil Energy (FE)/NETL CO_2 Transport Cost Model (CO_2 Transport Cost Model) and the FE/NETL CO_2 Saline Storage Cost Model (CO_2 Storage Cost Model). Additional detail on development of these costs is available in the 2019 revision of the QGESS document "Carbon Dioxide Transport and Storage Costs in NETL Studies." [42]

Due to the variances in the geologic formations that make up saline formations across the United States, the cost to store CO_2 will vary depending on location. Storage cost results from the CO_2 Storage Cost Model align with generic plant locations from the NETL studies that utilize the coal found in those particular basins:

- Midwest plant location – Illinois Basin
- Texas plant location – East Texas Basin
- North Dakota plant location – Williston Basin
- Montana plant location – Powder River Basin

The far-right column of Exhibit 2-21 shows the total T&S costs used in NETL system studies for each plant location rounded to the nearest whole dollar. Only the $10/tonne ($9/ton) value is used in this volume of the baseline study report since all cases are in the Midwest.

Exhibit 2-21. CO_2 transport and storage costs

Plant Location	Basin	Transport (2018 $/tonne)	Storage Cost at 25 Gt (2018 $/tonne)	T&S Value for System Studies[A] (2018 $/tonne)
Midwest	Illinois	2.07	8.32	10
Texas	East Texas		8.66	11
North Dakota	Williston		12.98	15
Montana	Powder River		19.84	22

[A]The sum of transport and storage costs rounded to the nearest whole dollar

2.7.4 LCOE and Breakeven CO_2 Sales Price and Emissions Penalty

The LCOE is the amount of revenue required per net megawatt-hour during the power plant's operational life to meet all capital and operational costs. The real LCOE can be obtained from the following formula:

$$LCOE = LCC + LOM + LFP$$

Where:

LCOE – the levelized cost of electricity, reported in $/MWh

LCC – the levelized capital cost

LOM – the levelized operating and maintenance cost

LFP – the levelized fuel price

The method used to determine capital recovery factor and levelization factors for operating and maintenance and fuel costs is found in the the Cost Estimating Quality Guideline.

The breakeven CO_2 sales price represents the minimum CO_2 plant gate sales price that will incentivize carbon capture relative to a defined reference non-capture plant. The breakeven CO_2 sales price is calculated using the following formula:

$$Breakeven\ CO_2\ Sales\ Price\ (\frac{\$}{tonne}) = \frac{(LCOE_{CCS} - LCOE_{Non\ CCS})}{CO_2\ Captured}$$

The breakeven CO_2 emissions penalty represents the minimum CO_2 emissions price, when applied to both the capture and non-capture plant, that will incentivize carbon capture relative to a defined reference non-capture plant. The breakeven CO_2 emissions penalty is calculated using the following formula:

$$Breakeven\ CO_2\ Emissions\ Penalty\ (\frac{\$}{tonne}) = \frac{(LCOE_{CCS\ with\ T\&S} - LCOE_{Non\ CCS})}{CO_2\ Emissions_{Non\ CCS} - CO_2\ Emissions_{CCS}}$$

Where:

CCS – the capture plant for which the breakeven CO_2 sales price/emissions penalty is being calculated (excluding T&S unless otherwise noted)

Non-CCS – the reference non-capture plant, as described below

LCOE – the levelized cost of electricity, reported in $/MWh

The CCS plant includes CO_2 compression to 15.3 MPa (2,215 psia)

For CO_2 Sales Price, the LCOE excludes T&S costs

For CO_2 Emissions Penalty, the LCOE includes T&S costs

CO_2 Captured – the rate of CO_2 captured, reported in tonne/MWh

CO_2 Emissions – the rate of CO_2 emitted out the stack, reported in tonne/MWh

For today's greenfield coal with CCS plants, the reference non-capture plant used to calculate the breakeven CO_2 sales price/emission penalty is an SC PC plant without capture.

For a greenfield natural gas-based power system, the reference plant used to calculate the breakeven CO_2 sales price/emission penalty is a non-capture natural gas-based plant.

Integrated Gasification Combined Cycle Plants

3 INTEGRATED GASIFICATION COMBINED CYCLE PLANTS

Seven IGCC power plant configurations were evaluated, and the results are presented in this section. Each design is based on a market-ready technology that is assumed to be commercially available to support startup.

In 2018 there were multiple mergers and acquisitions of gasifier technology business units, and each of the gasifier technologies considered in this report was impacted. In May of 2018, McDermott International, Inc. announced that it had completed a merger with Chicago Bridge & Iron Company. As a result, the formerly CB&I E-Gas™ gasifier has become the Lummus Technology E-Gas™ gasification technology. [43] Air Products announced in May 2018 the completion of the acquisition of the Coal Gasification Technology licensing business from Royal Dutch Shell. [44] Both the gasifier technology options previously offered by Shell included in this report are now presented as the Air Products Gasification-Dry Syngas Cooler (DSC) and Air Products Gasification-Dry Bottom Quench (DBQ) technologies. [45] Air Products also announced in November 2018 their agreement to acquire General Electric Company's gasification business. [46] A timeline to finalization of this acquisition was not identified at the time of this report. Given the timing of this recent market activity, and that all relevant acquisitions are not yet final as of the writing of this report, the legacy vendor and technology names previously used to describe the IGCC cases considered have been maintained for this report revision.

The seven IGCC cases evaluated are based on the GEP gasifier, the CB&I E-Gas™ gasifier, and the Shell gasifier, each with and without CO_2 capture. As discussed in Section 1, all plants were sized based on the constraints imposed by the fixed CT output; the net output from each plant varies due to differences in auxiliary power and utility demands.

The CT is based on a state-of-the-art 2008 F-class design. The HRSG/steam turbine cycle varies based on the CT exhaust conditions. Steam conditions are nominally 12.4 MPa/566°C/566°C (1800 psig/1050°F/1050°F) for all the non-CO_2 capture cases and 12.4 MPa/536°C/536°C (1800 psig/996°F/996°F) for all the CO_2 capture cases. The capture cases have a lower main and reheat steam temperature primarily because the turbine firing temperature is reduced to allow for a parts' life equivalent to NGCC operation with a high-H_2 content fuel, which results in a lower turbine exhaust temperature.

The evaluation scope included developing energy and mass balances and estimating plant performance. Equipment lists were developed for each design. Section 3.1 covers general information that is common to all of the cases; case-specific information is subsequently presented in sections 3.2, 3.3, and 3.4.

3.1 IGCC COMMON PROCESS AREAS

The cases have process areas, which are common to each plant configuration, such as coal receiving and storage, O_2 supply, gas cleanup, power generation, etc. As detailed descriptions of these process areas for each case would be repetitious, they are presented in this section for

general background information. Where there is case-specific performance information, the performance features are presented in the relevant case sections.

3.1.1 Coal Receiving and Storage

The function of the coal receiving and storage system is to unload, convey, prepare, and store the coal delivered to the plant. The scope of the system is from the trestle bottom dumper and coal receiving hoppers up to and including the slide gate valves at the outlet of the coal storage silos. Coal receiving and storage is identical in design for all seven cases; however, coal preparation and feed are gasifier-specific.

Operation Description – The coal is delivered to the site by 100-car unit trains comprising 91 tonne (100 ton) rail cars. The unloading is done by a trestle bottom dumper, which unloads the coal into two receiving hoppers. Coal from each hopper is fed directly into a vibratory feeder. The 8 cm x 0 (3" x 0) coal from the feeder is discharged onto a belt conveyor. Two conveyors with an intermediate transfer tower are assumed to convey the coal to the coal stacker, which transfer the coal to either the long-term storage pile or to the reclaim area. The conveyor passes under a magnetic plate separator to remove tramp iron and then to the reclaim pile.

The reclaimer loads the coal into two vibratory feeders located in the reclaim hopper under the pile. The feeders transfer the coal onto a belt conveyor that transfers the coal to the coal surge bin located in the crusher tower. The coal is reduced in size to 3 cm x 0 (1¼" x 0) by the crusher. A conveyor then transfers the coal to a transfer tower. In the transfer tower, the coal is routed to the tripper, which loads the coal into one of three silos. Two sampling systems are supplied: the as-received sampling system and the as-fired sampling system. Data from the analyses are used to support the reliable and efficient operation of the plant.

3.1.2 Air Separation Unit Selection

In order to efficiently support IGCC projects, air separation equipment has been modified and improved in response to production requirements and the consistent need to increase single train output. “Elevated pressure” air separation designs have been implemented that result in distillation column operating pressures that are over twice as high as traditional plants. In this report, the main air compressor (MAC) discharge pressure was set at 1.6 MPa (236 psia) compared to a traditional ASU plant operating pressure of about 0.7 MPa (105 psia). [47] For IGCC designs, the elevated pressure ASU process minimizes power consumption and decreases the size of some of the equipment items. The ASU power requirement assumed for this report is 420 kWh/ton-O_2 (including the MAC, booster compressor, and auxiliaries, on a 100 percent pure O_2 basis).

3.1.2.1 Residual Nitrogen Injection

The residual N_2 that is available after gasifier O_2 and N_2 requirements have been met is compressed and sent to the CT. Since all product streams are being compressed, the ASU air feed pressure is optimized to reduce the total power consumption and to provide a good match with available compressor frame sizes.

Increasing the diluent flow to the CT by injecting residual N_2 from the ASU can have several benefits, depending on the design of the CT:

- Increased diluent increases mass flow through the turbine, thus increasing the power output of the CT while maintaining optimum firing temperatures for syngas operation. This is particularly beneficial for locations where the ambient temperature and/or elevation are high and the CT would normally operate at reduced output.
- By mixing with the syngas or by being injected directly into the combustor, the diluent N_2 lowers the firing temperature (relative to natural gas) and reduces the formation of thermal NOx.

In this report, power augmentation was accomplished by diluting the fuel gas with excess N_2 from the ASU and in some cases, also with steam, until a combustion turbine output of 232 MWe was attained.

3.1.2.2 Air Integration

Air integration can provide a modest overall plant efficiency benefit. However, there are ASU operability complications introduced by air integration, particularly at startup. Based on discussions with several ASU vendors, it was decided that the operability issues outweigh the potential efficiency benefits; for this study, air integration is not used for any cases.

3.1.2.3 Elevated Pressure ASU Experience in Gasification

The Buggenum, Netherlands, unit built for Demkolec was the first elevated-pressure, fully integrated ASU to be constructed. It was designed to produce up to 1,796 tonnes/day (1,980 tpd) of 95 percent purity O_2 for a Shell coal-based gasification unit that fuels a Siemens V94.2 CT. In normal operation at the Buggenum plant, the ASU receives all its air supply from and sends all residual N_2 to the CT. [35]

The Polk County, Florida, ASU for the Tampa Electric IGCC is also an elevated-pressure, 95 percent purity O_2 design that provides 1,832 tonnes/day (2,020 tpd) of O_2 to a GEP coal-based gasification unit, which fuels a GEP 7FA CT. All the N_2 produced in the ASU is used in the CT. The original design did not allow for air extraction from the CT. After a CT air compressor failure in January 2005, a modification was made to allow air extraction, which, in turn, eliminated a bottleneck in ASU capacity and increased overall power output. [48]

3.1.2.4 Air Separation Plant Process Description

The air separation plant is designed to produce 95 vol% O_2 for use in the gasifier and Claus plant. The ASU is designed with two production trains, one for each gasifier. The air compressor is powered by an electric motor. N_2, containing less than 2 vol% of O_2, is recovered, compressed, and used as a diluent in the CT combustor. A process schematic of a typical elevated pressure ASU, which is based on vendor discussions and quotes, is shown in Exhibit 3-1. [49]

Exhibit 3-1. Typical ASU process schematic

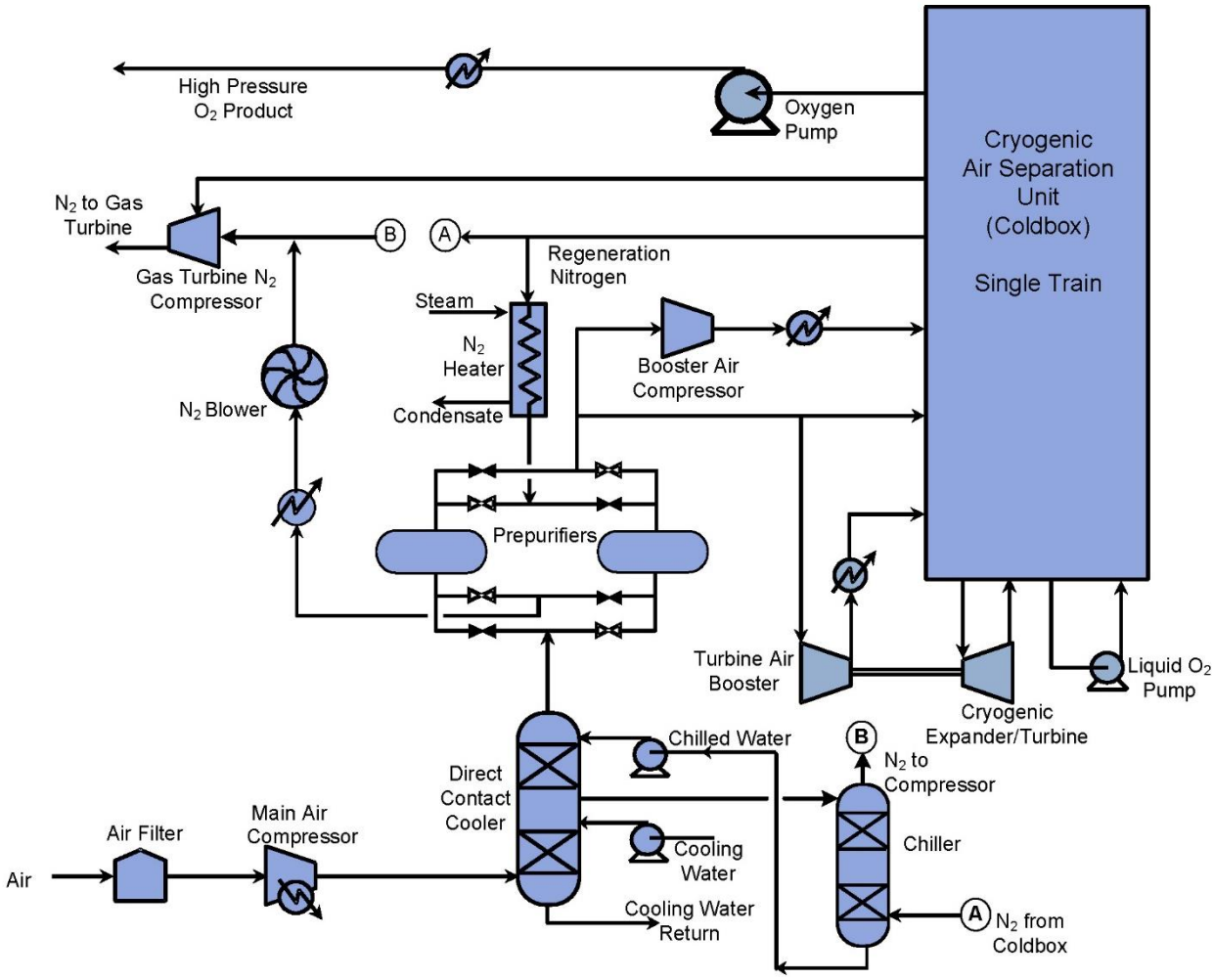

The air feed to the ASU is supplied from the stand-alone MAC. Air to the compressor is first filtered in a suction filter upstream of the compressor. This air filter removes particulates, which tend to cause compressor wheel erosion and foul intercoolers. The filtered air is then compressed in the centrifugal compressor, with intercooling and aftercooling.

Air from the MAC is cooled in a two-stage direct contact cooler. Cooling for the first stage is provided with plant-cooling water. Cooling/chilling for the second stage is provided by chilled water generated by contact with cold N_2 exiting the cold box.

Chilled air is fed to a molecular sieve adsorber pre-purifier system. The adsorbent removes water, CO_2, and C_4+ saturated hydrocarbons in the air. After passing through the adsorption beds, the air is filtered with a dust filter to remove any adsorbent fines that may be present. Downstream of the dust filter a small stream of air is withdrawn to supply the instrument air requirements of the ASU.

Regeneration of the adsorbent in the pre-purifiers is accomplished by passing a hot N_2 stream through the off-stream bed(s) in a direction counter current to the normal airflow. The N_2 is heated against extraction steam (1.7 MPa [250 psia]) in a shell and tube heat exchanger (HX).

[49] The regeneration N_2 drives off the adsorbed contaminants. Following regeneration, the heated bed is cooled to near normal operating temperature by passing a cool N_2 stream through the adsorbent beds. The bed is re-pressurized with air and placed on stream so that the current on-stream bed(s) can be regenerated.

The air from the pre-purifier is then split into three streams. About 70 percent of the air is fed directly to the cold box. About 25 percent of the air is compressed in an air booster compressor. This boosted air is then cooled in an aftercooler against cooling water. The remaining five percent of the air is fed to a turbine-driven, single-stage, centrifugal booster compressor. This stream is cooled in a shell and tube aftercooler against cooling water before it is fed to the cold box. [49]

All three air feeds are cooled in the cold box to cryogenic temperatures against returning product O_2 and N_2 streams in plate-and-fin HXs. The large air stream is fed directly to the first distillation column to begin the separation process. The second largest air stream is liquefied against boiling liquid O_2 before it is fed to the distillation columns. The third, smallest air stream is fed to the cryogenic expander to produce refrigeration to sustain the cryogenic separation process.

Inside the cold box the air is separated into O_2 and N_2 products. The O_2 product is withdrawn from the distillation columns as a liquid and is pressurized by a cryogenic pump. The pressurized liquid O_2 is then vaporized against the high-pressure (HP) air feed before being warmed to ambient temperature. The HP liquid O_2 exits the cold box and is pumped to the desired pressure before being heated to 27°C (80°F) and fed to the gasification unit.

N_2 is produced from the cold box at two pressure levels. Low-pressure (LP) N_2 is split into two streams, the first of which is used as the regeneration gas for the pre-purifiers before being recombined with the balance of the LP N_2 prior to the compressor; the second LP N_2 product stream is used in the direct contact coolers chiller. HP N_2 is also produced from the cold box and is further compressed. The majority of the compressed N_2 is fed to the CT as diluent N_2. However, depending on plant configuration, N_2 may also be utilized in the AGR and coal feed systems.

3.1.3 Water Gas Shift Reactors

3.1.3.1 Selection of Technology

In the cases with CO_2 separation and capture, the gasifier product must be converted to a CO_2 and H_2-rich syngas. The syngas CO is converted to CO_2 by reacting with water over a bed of catalyst, producing H_2. The exit steam to dry gas ratio of the shift reaction, shown below, is maintained above a lower limit of 0.25 to prevent carbon deposition and deactivation of the catalyst. The required steam extraction and associated penalty to the steam cycle is balanced with the catalyst cost while achieving the necessary conversion to achieve 90 percent overall carbon capture. [50] There is also a loss of chemical energy associated with the exothermic conversion of water (H_2O) and CO to CO_2 and H_2. In the WGS configuration employed, intercooling is applied between stages and the recovered heat is used to generate steam for use

elsewhere in the plant, thus offsetting some of this loss. In the cases without CO_2 separation and capture, CO shift convertors are not required.

Water Gas Shift: $CO + H_2O \leftrightarrow CO_2 + H_2$

The CO shift converter can be located either upstream of the AGR step (sour gas shift) or immediately downstream (sweet gas shift). The WGS must be located upstream of the AGR to achieve high levels of carbon capture. If the CO converter is located downstream of the AGR, then the metallurgy of the unit is less stringent but additional equipment must be added to the process. This is because the CO converter promotes COS hydrolysis without a separate catalyst bed. Products from the gasifier are humidified with steam or water and contain a portion of the water vapor necessary to meet the water-to-gas criterion. If the CO converter is located downstream of the AGR, then the gasifier product would first have to be cooled and the free water separated and treated. Then additional steam would have to be generated and re-injected into the CO converter feed to meet the required water-to-gas ratio. Therefore, for this study, a sour gas shift is included, and the CO converter was located upstream of the AGR.

3.1.3.2 Process Description

The WGS consists of two paths of parallel fixed-bed reactors arranged in series. Two reactors in series are used in each parallel path to achieve conversion up to approximately 95 percent, while higher conversions necessary to meet the 90 percent carbon capture target require three reactors. In the E-Gas™ case, a third shift reactor is added to each parallel train to increase the CO conversion because of the relatively high amount of CH_4 present in the syngas. Steam injection upstream of the shift reactors is extracted from the steam cycle and is used to drive the reaction and control the outlet steam to dry gas ratio. Quench cases and cases with more direct contact syngas water cooling require little or no additional steam injection.

Cooling is provided between the series of reactors to control the exothermic temperature rise. In all four CO_2 capture cases, the HXs are used to raise steam for injection or otherwise integrated into the plant, such as for syngas reheating. Between 93 and 95 percent conversion of the CO is achieved in the GEP and Shell cases, and over 97 percent conversion is achieved in the E-Gas™ case.

3.1.4 Mercury Removal

An IGCC power plant has the potential of removing mercury in a simpler manner than conventional plants (e.g., PC). This is because mercury can be removed from the syngas at elevated pressure and prior to combustion where syngas volumes are much smaller than combusted flue gas volumes in conventional plants. A conceptual design for a sulfur-impregnated, activated carbon bed adsorption system was developed for mercury control, where mercury is captured in the reduced state. Data on the performance of carbon bed systems were obtained from the Eastman Chemical Company, which uses carbon beds at its syngas facility in Kingsport, Tennessee. [23] The coal mercury content (0.15 ppmvd) and carbon bed removal efficiency (approximately 97 percent) were discussed previously in Section 2.2 and Section 2.4.3.1, respectively.

3.1.4.1 Carbon Bed Location

The packed carbon bed vessels are located upstream of the AGR process. Syngas is preheated from temperatures between 27°C (80°F) and 29°C (85°F), to temperatures of 37°C (98°F) and 38°C (100°F) before entering the bed. The preheating is necessary to avoid condensation within the bed. Consideration was given to locating the beds further upstream before the COS hydrolysis unit (in non-CO_2 capture cases) at a temperature near 204°C (400°F). However, while the mercury removal efficiency of carbon has been found to be relatively insensitive to pressure variations, temperature adversely affects the removal efficiency. [51] Eastman Chemical operates their beds ahead of their sulfur recovery unit (SRU) at a temperature of 30°C (86°F). [23]

Consideration was also given to locating the beds downstream of the AGR. However, it was felt that removing the mercury and other contaminants before the AGR would enhance the performance of the AGR and increase the life of the various solvents.

3.1.4.2 Process Parameters

An empty vessel basis gas residence time of approximately 20 seconds was used based on Eastman Chemical's experience. [23] Allowable gas velocities are limited by considerations of particle entrainment, bed agitation, and pressure drop. One-foot-per-second superficial velocity is in the middle of the range normally encountered [51] and was selected for this application.

The bed density of 480 kg/m^3 (30 lb/ft^3) was based on the Calgon Carbon Corporation HGR®-P sulfur-impregnated pelleted activated carbon offering as of 2002. [52] These parameters determined the size of the vessels and the amount of carbon required. Each gasifier train has two sequential mercury removal beds; the first bed achieves 90 percent of the necessary removal, with the second bed removing the balance of the mercury necessary to meet the emissions limit of 3.0×10^{-6} lb/MWh-gross. Since there are two gasifier trains per case, each case has four total carbon beds.

3.1.4.3 Carbon Replacement Time

Eastman Chemicals replaces its bed every 18 to 24 months. [23] However, bed replacement is not due to mercury loading, but rather from:

- A buildup in pressure drop
- A buildup of water in the bed
- A buildup of other contaminants

For this report, a 24-month carbon replacement cycle was assumed. Under these assumptions, the mercury loading in the bed would build up to 0.6–1.1 percent by weight (wt%). Mercury capacity of sulfur-impregnated carbon can be as high as 30 wt%. [53] The mercury laden carbon is considered to be a hazardous waste.

3.1.5 AGR Process Selection

Gasification of coal to generate power produces a syngas that must be treated prior to further utilization. A portion of the treatment consists of AGR and sulfur recovery. This includes all sulfur species, but in particular the total of COS and H_2S, thereby resulting in stack gas emissions of less than 4 ppmv SO_2.

3.1.5.1 COS Hydrolysis

The use of COS hydrolysis pretreatment in the feed to the AGR process converts the COS to a more easily capturable H_2S species. This method was first commercially proved at the Buggenum plant and was also used at both the Tampa Electric and Wabash River IGCC projects. Several catalyst manufacturers, including Haldor Topsøe, Porocel, and Johnson Matthey, offer a catalyst that promotes the COS hydrolysis reaction. The non-carbon capture COS hydrolysis reactor designs are based on information from Johnson Matthey [54] and Porocel. The Porocel activated alumina-based catalyst, designated as Hydrocel 640 catalyst, promotes the COS hydrolysis reaction without promoting reaction of H_2S and CO to form COS and H_2. In cases with CO_2 capture, the WGS reactors reduce COS to H_2S as discussed in Section 3.1.3; therefore, a separate COS hydrolysis unit is not required.

The COS hydrolysis reaction is equimolar with a slightly exothermic heat of reaction, as shown in the following reaction:

$$COS + H_2O \leftrightarrow CO_2 + H_2S$$

Since the reaction is exothermic, higher conversion is achieved at lower temperatures. However, at lower temperatures the reaction kinetics are slower. Based on the feed gas for this evaluation, Johnson Matthey recommended maintaining a 14°C (25°F) margin above the dew point, with a minimum operating temperature of 120°C (250°F) [54] (Porocel recommended an optimum operating temperature of 177 to 204°C [350 to 400°F]). For low temperature operations, increasing the feed stream's moisture concentration or utilizing additional reactor stages with H_2S removal between stages may be used to promote a higher equilibrium conversion of COS. [54] A retention time of approximately 10 seconds was used to achieve 95.0 percent conversion of the COS. [54]

Although the reaction is exothermic, the heat of reaction is dissipated among the large amount of non-reacting components. Therefore, the reaction is essentially isothermal. The product gas, containing between 6 and 35 ppmv of COS, is cooled prior to entering the mercury removal process and the AGR.

3.1.5.2 Sulfur Removal

H_2S removal generally consists of absorption by a regenerable solvent. The most commonly used technique is based on counter current contact with the solvent. Acid-gas-rich solution from the absorber is stripped of its acid gas in a regenerator, usually by application of heat. The regenerated lean solution is then cooled and recirculated to the top of the absorber, completing the cycle. Exhibit 3-2 is a simplified diagram of the AGR process. [55]

Exhibit 3-2. Flow diagram for a conventional single-stage AGR unit

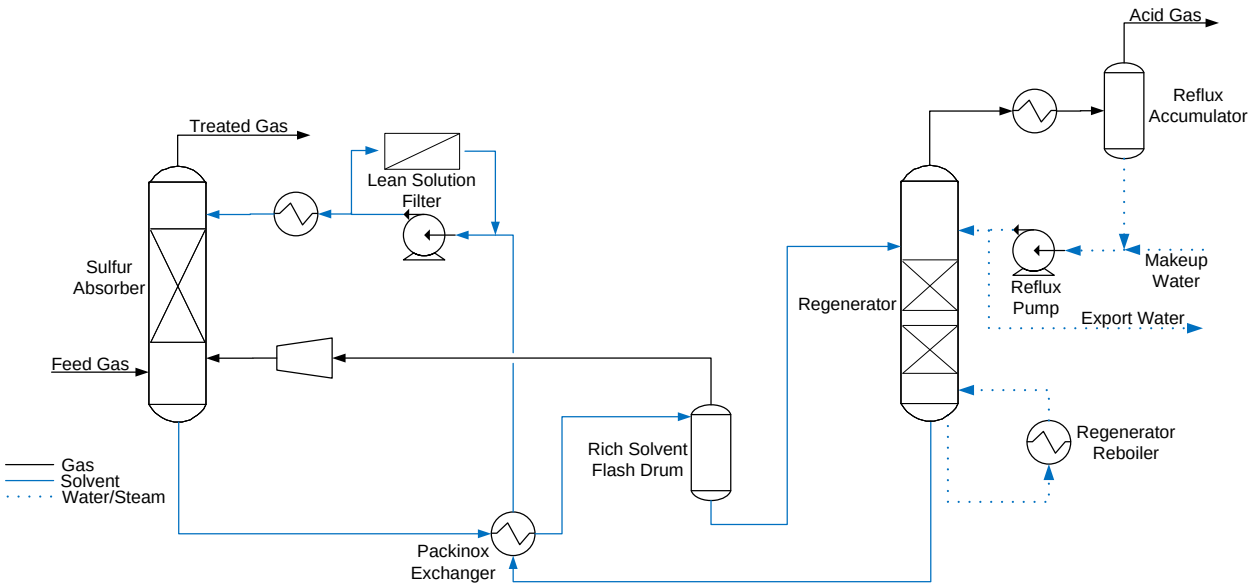

There are well over 30 AGR processes in common commercial use throughout the oil, chemical, and natural gas industries. However, in a 2002 report by SFA Pacific a list of 42 operating and planned gasifiers shows that only six AGR processes are represented: Rectisol, Sulfinol-M, MDEA, Selexol, aqueous di-isopropanol (ADIP) amine, and FLEXSORB. [56] These processes can be separated into three general types: chemical reagents, physical solvents, and hybrid solvents.

3.1.5.3 AGR Technology Selection in Non-Capture Cases

There are numerous commercial AGR processes that could meet the sulfur environmental target of this report. The most frequently used AGR systems (Selexol, Sulfinol-M, MDEA, and Rectisol) have all been used with the Shell and GEP gasifiers in various applications. Both existing E-Gas™ gasifiers use MDEA but could in theory use any of the existing AGR technologies. [55] The following selections were made for the AGR process in non-CO_2 capture cases:

- GEP gasifier: Selexol was chosen based on the GEP gasifier operating at the highest pressure (5.6 MPa [815 psia] versus 4.2 MPa [615 psia] for E-Gas™ and Shell), which favors the physical solvent used in the Selexol process.
- E-Gas™ gasifier: Refrigerated MDEA was chosen because the two operating E-Gas™ gasifiers use MDEA and because CB&I lists MDEA as the selected AGR process on their website. [56] Refrigerated MDEA was chosen over conventional MDEA because the sulfur emissions environmental target chosen is just outside of the range of conventional (higher temperature) MDEA.
- Shell gasifier: The Sulfinol-M process was chosen for this case because it is a Shell owned technology. While the Shell gasifier can and has been used with other AGR processes, it was concluded the most likely pairing would be with the Sulfinol-M process.

3.1.5.4 AGR Technology Selection in CO_2 Capture Cases

The two-stage Selexol process is used in all four cases that require CO_2 capture. According to the previously referenced SFA Pacific report, "For future IGCC with CO_2 removal for sequestration, a two-stage Selexol process presently appears to be the preferred AGR process – as indicated by ongoing engineering studies at EPRI and by various engineering firms with IGCC interests." [57]

As several vendors have indicated that Selexol is sensitive to NH_3 and have specified that NH_3 should be reduced to a concentration below 10 ppmv in the syngas feed, a water wash column is included upstream of the AGR for NH_3 control, as detailed in Section 3.1.12.1.4.

As shown in Exhibit 3-3, syngas enters the bottom of the first of two absorbers and flows upward through packed beds where it contacts chilled solvent—loaded with CO_2—entering at the top of the column, which preferentially removes H_2S from the gas phase.

Exhibit 3-3. Flow diagram for a conventional two-stage AGR unit

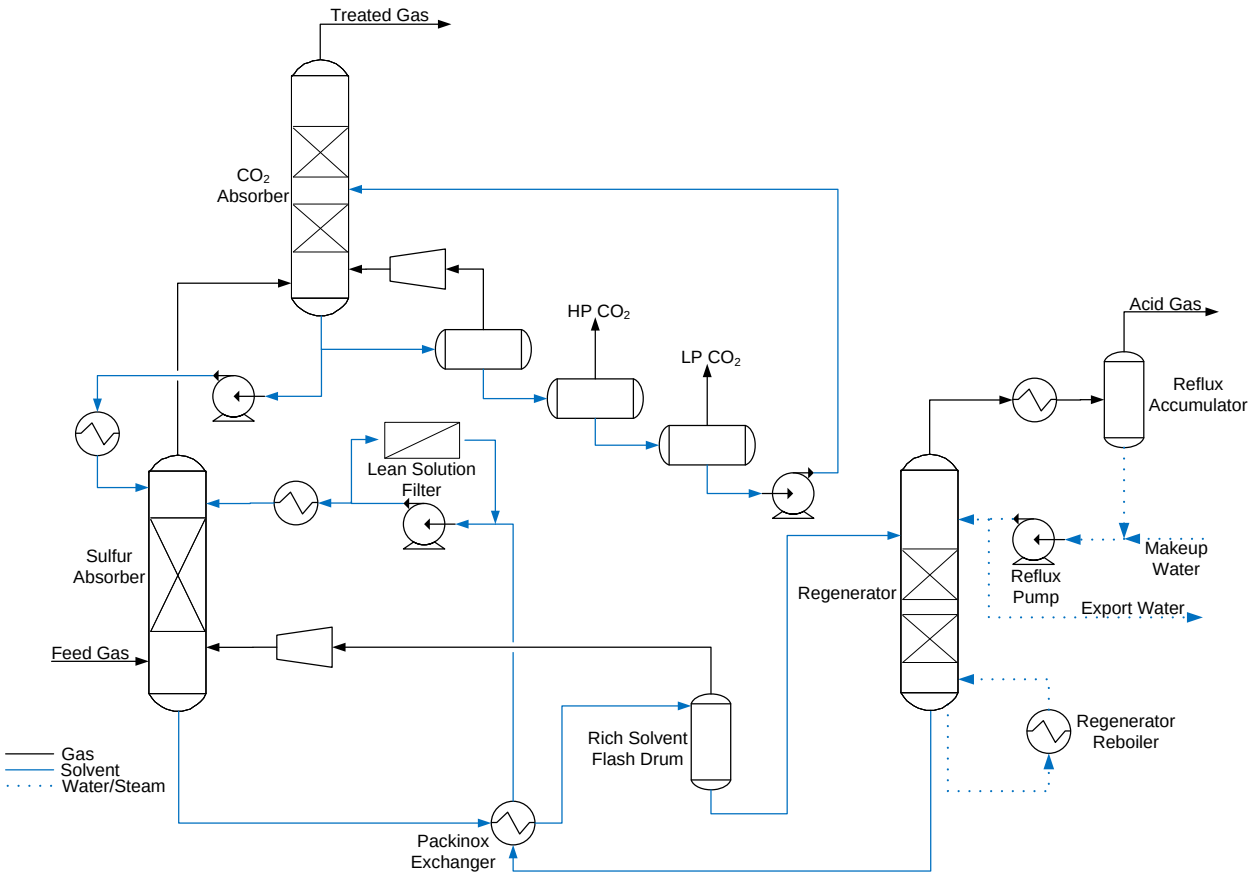

The gas from the H_2S absorber flows upward through the packed beds of the second absorber. CO_2 is removed from the gas phase first by semi-lean, flash-regenerated solvent entering near the middle of the tower, followed by chilled, lean solvent entering at the top of the tower. The treated gas passes through de-entrainment devices at the top of the tower before exiting the

absorber and being sent directly to the CT. A portion of the gas can also be used for coal drying, when required.

The CO_2 loaded solvent exits the CO_2 absorber. A portion is sent to the H_2S absorber, which is pumped up to pressure and then chilled prior to reaching the H_2S absorber, and the remainder is sent to a series of flash drums for regeneration.

The portion sent to the flash regeneration is expanded in the HP CO_2 recycle flash drum at 2.0 MPa (289.7 psia) where H_2, CH_4, CO_2, and other dissolved gases are transferred to the gas phase. The flashed off gas is compressed and returned to the CO_2 absorber, minimizing product losses to the CO_2 stream.

The amount of H_2 recovered from the syngas stream is dependent on the Selexol process design conditions. In this report, H_2 recovery is 99.5 percent per pass. The minimal H_2 slip to the CO_2 sequestration stream maximizes the overall plant efficiency.

The semi-rich solvent from the HP CO_2 recycle flash drum is routed to two sequential CO_2 flash drums. The MP CO_2 stream is flashed at 0.55 MPa (80 psia) and the LP CO_2 stream is flashed at 0.1 MPa (16.7 psia). The flashed CO_2 gas is sent to the CO_2 compressors and the semi-lean solvent is pumped back to the CO_2 absorber.

The rich solvent exiting the H_2S absorber is heated using the lean solvent from the stripper. The hot, rich solvent enters the H_2S concentrator and partially flashes. The gas exiting the concentrator is compressed and recycled back to the H_2S absorber. The H_2S-rich solvent from the concentrator is sent to the regenerator for thermal regeneration.

The regenerator is composed of a lower section containing packed beds and an upper section containing several reflux trays used to contact the overhead vapor with the reflux water. The solvent from the concentrator enters the regenerator above the packed bed and flows downward, releasing H_2S, CO_2, and other components as it passes an upflow of hot vapor generated in the reboiler.

The combined gases and hot vapor flow upward through a demister and the trayed section, where it is contacted with downflowing reflux water, which cools and condenses the hot vapor and reduces solvent entrainment. The overhead stream passes through a de-entrainment device and exits the top of the column. The overhead gas then passes through the reflux condenser in order to recover the overhead liquid. The cooled liquid and vapor phases are separated in the reflux drum. The reflux liquid is pumped to the trayed section of the regenerator and the acid gas stream is sent to the Claus plant for further processing, as discussed in Section 3.1.7. The lean solvent exiting the stripper is first cooled by providing heat to the rich solvent, then further cooled by exchange with the product gas and finally chilled in the lean chiller before returning to the top of the CO_2 absorber.

The Selexol process unit can be constructed primarily out of killed carbon steel, which is a deoxidized steel that provides limited or no ageing, and a harder material. High severity areas of the Selexol process require stainless steel.

High severity areas are defined as:

- High temperature

- CO_2/H_2S evolution
- High turbulence
- Areas not normally wetted by Selexol solvent

The reboiler, absorber and regenerator packing and internals, regenerator column and reflux circuit, water wash section of the absorbers, and reflux pump impellers and casings are considered high severity areas.

3.1.6 CO_2 Compression and Drying System

All the CO_2 capture cases use two-stage Selexol with internal recycle of the high-pressure flash, as referenced in Section 3.1.5.4. As a result, the CO_2 discharge pressures from the AGR for each capture case are identical, as are the suction pressures at the CO_2 compressor inlets. Therefore, the CO_2 compressor specifications, stage pressure ratios and outlet stage pressures are identical for each of the CO_2 capture cases with the major differentiator being the inlet CO_2 flow rates.

The compression system was modeled based on vendor supplied data and using elements of the compressor design presented in the Carbon Capture Simulation Initiative's paper "Centrifugal Compressor Simulation User Manual." [58] The design was assumed to be an eight-stage front-loaded integrally geared centrifugal compressor with feed streams at stage one and stage three. The stage discharge pressures are presented in Exhibit 3-4.

Exhibit 3-4. CO_2 compressor interstage pressures

Stage	Outlet Pressure, MPa (psia)	Stage Pressure Ratio
1	0.26 (38)	2.28
2	0.59 (85)	2.28
3	1.22 (177)	2.21
4	2.51 (364)	2.07
5	3.97 (576)	1.66
6	6.34 (919)	1.60
7	9.87 (1,432)	1.56
8	15.27 (2,215)	1.55

The AGR produces CO_2 at two pressure levels and contains approximately 99 percent CO_2. The LP CO_2 stream enters the first stage of the CO_2 compressor at 0.1 MPa (16.7 psia) and is compressed to 0.59 MPa (85 psia) in the first two compression stages with intercooling. The LP CO_2 stream exiting stage two of compression is flashed to 0.55 MPa (80 psia) and is combined with the MP CO_2 stream prior to stage three of compression. The combined stream is compressed in the following two stages to 2.51 MPa (364 psia) with intercooling, after which the combined stream is dehydrated using a triethylene glycol (TEG) dryer. The dried CO_2 stream

is then further compressed in the final four stages, with intercooling, to the target product pressure of 15.27 MPa (2,215 psia).

Intercooling is included for each stage with the first three stages including water knockout. The first five intercoolers cool the CO_2 to 29°C (85°F), the sixth intercooler cools the CO_2 to 40°C (104°F), and the final intercooler cools the CO_2 to 55°C (131°F). The increased temperature is utilized in the final two stages of intercooling to provide a suitable buffer between the compressor operating profile and SC CO_2 dome. A CO_2 product aftercooler is also included to cool the CO_2 30°C (86°F). CO_2 transportation and storage costs assume that the CO_2 enters the transport pipeline as a dense phase liquid; thus, a pipeline inlet temperature of 30°C (86°F) is considered. Exhibit 3-5 shows the enthalpy versus pressure plot for the CO_2 compressor modeled in Case B1B. Reference conditions for the data are 0.01°C (32.02°F) and 0.0006 MPa (0.089 psia), the same as those used for stream table results. Data points representing compression stage discharge pressures are labeled with the compression stage number (e.g., C1). Given that all four IGCC cases with CO_2 capture utilize the same AGR, and thus, have the same CO_2 discharge pressures, the operating profile is identical across all four IGCC cases with CO_2 capture. The CO_2 aftercooler is not represented in the compressor operating profile plot.

Exhibit 3-5. IGCC CO_2 compressor enthalpy versus pressure operating profile

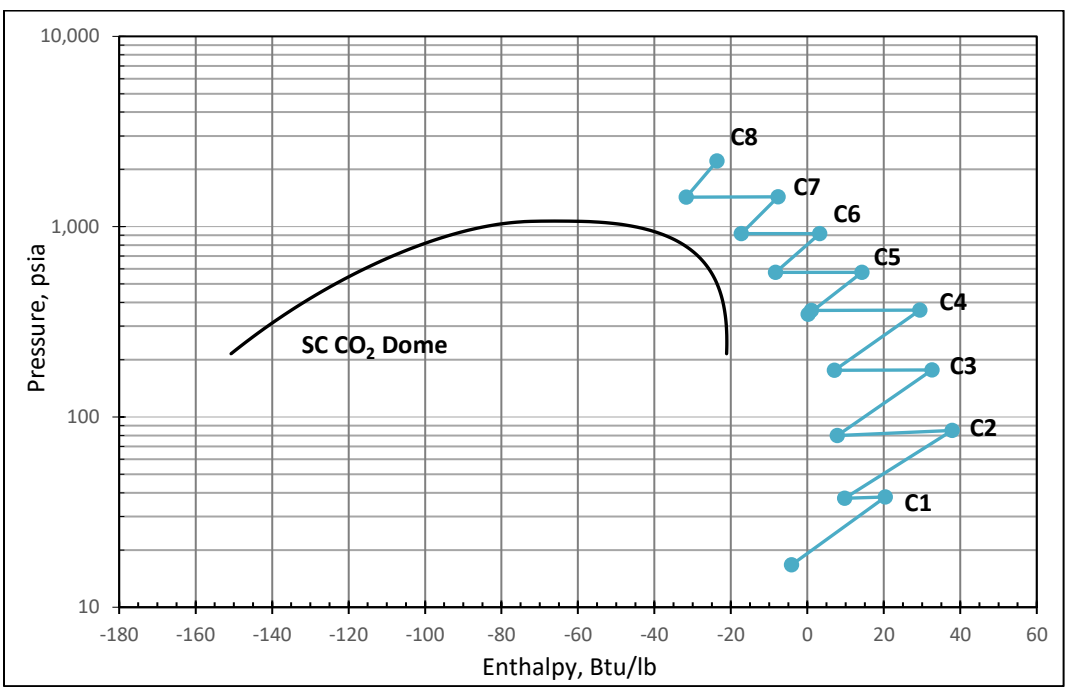

A TEG dehydration unit is included between stages 4 and 5, operating at 2.39 MPa (347 psia), to reduce the moisture concentration of the CO_2 stream to 500 ppmv. The dryer was designed based on a paper published by the Norwegian University of Science and Technology. [59]

In an absorption process, such as in a TEG dehydration unit, the gas containing water flows up through a column while the TEG flows downward. The solvent preferentially binds the water by physical absorption. The dried gas exits at the top of the column, while the solvent rich in water

exits at the bottom. After depressurization to around atmospheric pressure, the solvent is regenerated by heating it and passing it through a regeneration column where the water is boiled off. A TEG unit is capable of reducing water concentrations to meet the QGESS design point of 500 ppmv. [60]

3.1.7 Sulfur Recovery/Tail Gas Cleanup Process Selection

Currently, most of the world's sulfur is produced from petroleum refining, natural gas processing, and coking plants. Sulfur compounds in syngas need to be removed in most gasification applications due to environmental regulations or to avoid catalyst poisoning. The Claus process is still the industry standard for sulfur recovery. Conventional three-stage Claus plants, with indirect reheat and feeds with a high H_2S content, can approach 98 percent sulfur recovery efficiency. However, since environmental regulations have become more stringent, sulfur recovery plants are required to recover sulfur with over 99.8 percent efficiency. To meet these stricter regulations, the Claus process underwent various modifications and add-ons. [57]

The add-on modification to the Claus plant selected for this report can be considered a separate option from the Claus process. In this context, it is often called a tail gas treating unit (TGTU) process.

<u>The Claus Process</u>

The Claus process converts H_2S to elemental sulfur via the following reactions:

$$H_2S + 3/2\ O_2 \leftrightarrow H_2O + SO_2$$
$$2H_2S + SO_2 \leftrightarrow 2H_2O + 3S$$

The second reaction, the Claus reaction, is equilibrium limited. The overall reaction is:

$$3H_2S + 3/2\ O_2 \leftrightarrow 3H_2O + 3S$$

The sulfur in the vapor phase exists as S_2, S_6, and S_8, with the S_2 predominant at higher temperatures, and S_8 predominant at lower temperatures.

A simplified process flow diagram of a typical three-stage Claus plant is shown in Exhibit 3-6. [57] One-third of the H_2S is burned in the furnace with O_2 from the air to give sufficient SO_2 to react with the remaining H_2S. Since these reactions are highly exothermic, a boiler that recovers this heat to generate HP steam usually follows the furnace. Sulfur is condensed in a condenser that follows the HP steam recovery section. LP steam is raised in the condenser. The tail gas from the first condenser then goes to several catalytic conversion stages, usually two to three, where the remaining sulfur is recovered via the Claus reaction. Each catalytic stage consists of gas preheat, a catalytic reactor, and a sulfur condenser. The liquid sulfur goes to the sulfur pit, while the tail gas proceeds to the incinerator or for further processing in a TGTU.

3.1.7.1 Claus Plant Sulfur Recovery Efficiency

The Claus reaction is equilibrium limited, and sulfur conversion is sensitive to the reaction temperature. The highest sulfur conversion in the thermal zone is limited to about 75 percent. Typical furnace temperatures are in the range of 1,093–1,427°C (2,000–2,600°F), and as the temperature decreases, conversion increases dramatically.

Exhibit 3-6. Typical three-stage Claus sulfur plant

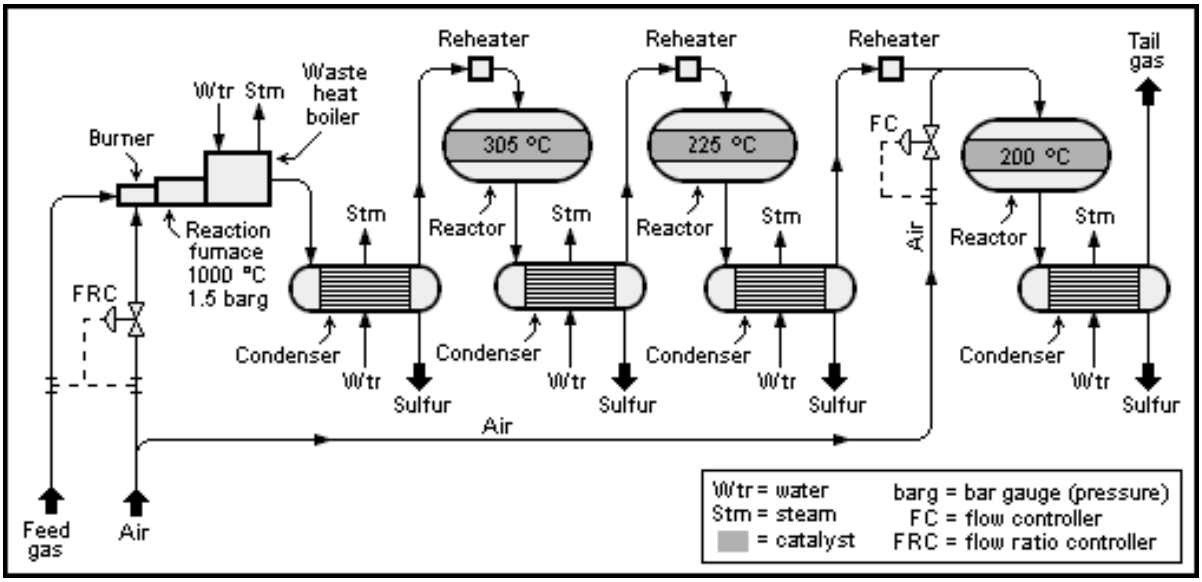

Used with permission from Beychok [61]

Claus plant sulfur recovery efficiency depends on many factors:

- H_2S concentration of the feed gas
- Number of catalytic stages
- Gas reheat method

In order to keep Claus plant recovery efficiencies approaching 94 to 96 percent for feed gases that contain about 20 to 50 percent H_2S, a split-flow design is often used. In this version of the Claus plant, part of the feed gas is bypassed around the furnace to the first catalytic stage, while the rest of the gas is oxidized in the furnace to mostly SO_2. This results in a more stable temperature in the furnace.

3.1.7.2 Oxygen-Blown Claus

One way to reduce diluent flows through the Claus plant and to obtain stable temperatures in the furnace for dilute H_2S streams is the O_2-blown Claus process.

The O_2-blown Claus process was originally developed to increase capacity at existing conventional Claus plants and to increase flame temperatures of low H_2S content gases. The process has also been used to provide the capacity and operating flexibility for sulfur plants where the feed gas is variable in flow and composition such as often found in refineries. The application of the process has now been extended to greenfield installations, even for rich H_2S feed streams, to provide operating flexibility compared to conventional Claus units. At least four of the gasification plants in Europe use O_2-enriched Claus units.

O_2 enrichment results in higher temperatures in the front-end furnace, potentially reaching temperatures as high as 1,593–1,649°C (2,900–3,000°F) as the enrichment moves beyond 40–70 vol% O_2 in the oxidant feed stream. Although O_2 enrichment has many benefits, its primary

benefit for lean H_2S feeds is a stable furnace temperature. O_2 enrichment also allows for tailgas recycle without N_2 diluent, which would be needed for an air-blown Claus system. Sulfur recovery is not significantly enhanced by O_2 enrichment. Because the IGCC process already requires an ASU, the O_2-blown Claus plant was chosen for all cases.

3.1.7.3 Tail Gas Treating

In many refinery and other conventional Claus applications, tail gas treating involves the removal of the remaining sulfur compounds from gases exiting the SRU. Tail gas from a typical Claus process, whether a conventional Claus or one of the extended versions of the process, usually contains small but varying quantities of COS, CS_2, H_2S, SO_2, and elemental sulfur vapors. In addition, there may be H_2, CO, and CO_2 in the tail gas. In order to remove the rest of the sulfur compounds from the tail gas, all the sulfur-bearing species must first be converted to H_2S. Then, the resulting H_2S is absorbed into a solvent and the clean gas vented or recycled for further processing. The clean gas resulting from the hydrolysis step can undergo further cleanup in a dedicated absorption unit or be integrated with an upstream AGR unit. The latter option is particularly suitable with physical absorption solvents. The approach of treating the tail gas in a dedicated amine absorption unit and recycling the resulting acid gas to the Claus plant is the one used by the Shell Claus Off-gas Treating (SCOT) process. With tail gas treatment, Claus plants can achieve overall removal efficiencies in excess of 99.9 percent.

In the case of IGCC applications, the tail gas from the Claus plant can be catalytically hydrogenated and then recycled back into the system with the choice of location being technology dependent, or it can be treated with a SCOT-type process. In each of the seven cases the Claus plant tail gas is hydrogenated, water is separated, the tail gas is compressed and then returned to the AGR process for further treatment.

3.1.7.4 Flare Stack

In most Claus plants, a self-supporting, refractory-lined, carbon steel (CS) flare stack is typically provided to combust and dispose of unreacted gas during startup, shutdown, and upset conditions. However, in all seven IGCC cases, a flare stack was included for syngas dumping during startup, shutdown, etc. Hence, a separate dedicated Claus plant flare was not required.

3.1.8 Slag Handling

The slag handling system conveys, stores, and disposes of slag removed from the gasification process. Spent material drains from the gasifier bed into a water bath in the bottom of the gasifier vessel. A slag crusher receives slag from the water bath and grinds the material into pea-sized fragments. A slag/water slurry that is between 5 and 10 percent solids leaves the gasifier pressure boundary through either a proprietary pressure letdown device (E-Gas™) or using lockhoppers (GEP and Shell) to a series of dewatering bins.

The general aspects of slag handling are the same for all three gasification technologies. The slag is dewatered, the water is clarified and recycled, and the dried slag is transferred to a storage area for disposal. The specifics of slag handling vary among the gasification

technologies regarding how the water is separated and the end uses of the water recycle streams.

In this report, the slag bins were sized for a nominal holdup capacity of 72 hours of full-load operation. At periodic intervals, a convoy of slag-hauling trucks will transit the unloading station underneath the hopper and remove a quantity of slag for disposal. Approximately ten truckloads per day are required to remove the total quantity of slag produced by the plant operating at nominal rated power. While the slag is suitable for use as a component of road paving mixtures, or potentially as a landfill cover material, it was assumed in this report that the slag would be landfilled with a disposal cost.

3.1.9 Power Island

3.1.9.1 Combustion Turbine

The CT generator selected for this application is representative of the state-of-the-art 2008 F-class turbines. This machine is an axial flow, single spool, and constant speed unit, with variable inlet guide vanes (IGVs). The turbine includes advanced bucket cooling techniques, compressor aerodynamic design and advanced alloys, enabling a higher firing temperature than the previous generation machines. The standard production version of this machine is fired with natural gas and is also commercially offered for use with IGCC derived syngas, such as at the Duke Edwardsport IGCC plant. Performance typical of a state-of-the-art 2008 F-class turbine on natural gas at ISO conditions is presented in Exhibit 3-7.

Exhibit 3-7. State-of-the-art 2008 F-class combustion turbine performance characteristics using natural gas [62]

State-of-the-art 2008 F-Class	
Firing Temperature Class, °C (°F)	1,371+ (2,500+)
Airflow, kg/s (lb/s)	431 (950)
Pressure Ratio	18.5
Simple Cycle Output, MW	185
Combined cycle performance	
Net Output, MW	280
Net Efficiency (LHV), %	57.3
Net Heat Rate (LHV), kJ/kWh (Btu/kWh)	6,284 (5,956)

In this service, with syngas from an IGCC plant, the machine requires some modifications to the burner and turbine nozzles in order to properly combust the low-calorific value gas and expand the combustion products in the turbine section of the machine. Syngas and high H_2 fuel combustion introduce unique concerns such as flame stability, flashback, and NOx formation.

The modifications to the machine include a redesign of the original can-annular combustors. A second modification involves increasing the nozzle areas of the turbine to accommodate the

volume flow of low-calorific value fuel gas combustion products, which are increased relative to those produced when firing natural gas. Other modifications include rearranging the various auxiliary skids that support the machine to accommodate the spatial requirements of the plant's general arrangement. The generator is a standard H_2-cooled machine with static exciter.

The combustion turbine considered for IGCC cases is of 2008 vintage but considered state-of-the-art for syngas applications. It is the same technology as presented in previous revisions of this report. In the NGCC section later in this report (Section 5.1.2), a 2017 F-class combustion turbine is considered for natural gas applications. There are significant differences between these two machines. The output for the natural gas combustion turbine is increased over syngas (232 MW per CT in IGCC versus 238 MW per CT in NGCC; the Revision 3 NGCC CT has an output of 211 MW). The efficiency of the 2017 vintage turbine is also improved. Per Exhibit 3-7 above, the 2008 vintage F-class firing natural gas would achieve a net plant efficiency (lower heating value [LHV] basis) of approximately 57.3 percent. The 2017 F-class applied in NGCC cases is reported to achieve a net plant efficiency (LHV basis) of 59.4 percent. These efficiency increases, and other design improvements, represent advances in F-class technology. However, in discussion with the vendor, there hasn't been significant recent advances in syngas-fired combustion turbine technology; therefore, the IGCC F-class combustion turbines in this report do not benefit from advances in output, efficiency, or other improvements. If a syngas application were to be developed today, the design for that machine would likely be based on the 2017 F-class frame or newer, and adjustments made to accommodate the syngas fuel, which would improve upon the 2008 vintage output and efficiency. However, per the vendor, such a design is not currently commercially offered. Therefore, the 2008 vintage syngas combustion turbine continues to be applied for IGCC cases.

3.1.9.2 Combustion Turbine Package Scope of Supply

The CT is typically supplied in several fully shop-fabricated modules, complete with all mechanical, electrical, and control systems as required for CT operation. Site CT installation involves module inter-connection and linking CT modules to the plant systems.

3.1.9.3 CT Firing Temperature Control Issue for Low Calorific Value Fuel

A CT fired on low calorific value (LCV) syngas has the potential to increase power output due to the increase in flow rate through the turbine. The higher turbine flow and moisture content of the combustion products can contribute to overheating of turbine components, affect rating criteria for the parts lives, and require a reduction in syngas firing temperatures (compared to the natural gas firing) to maintain design metal temperature. [63] Uncontrolled syngas firing temperature could result in more than 50 percent life cycle reduction of stage 1 buckets. Control systems for syngas applications include provisions to compensate for these effects by maintaining virtually constant generation output for the range of the specified ambient conditions. IGVs and firing temperature are used to maintain the turbine output at the maximum torque rating, producing a flat rating up to the IGV full open position. Beyond the IGV full open position, flat output may be extended to higher ambient air temperatures by steam/ N_2 injection.

In this report, the approximate firing temperature (defined as inlet rotor temperature) in the non-capture cases is 1,371°C (2,500°F) and in the CO_2 capture cases is 1,343°C (2,450°F). The reduction in firing temperature in the CO_2 capture cases is done to maintain equivalent parts life as the H_2O content of the combustion products increases from 5 to 7 vol% in the non-capture cases to 12 vol% in the capture cases. The decrease in temperature also results in a lower temperature steam cycle range in the CO_2 capture cases, 12.4 MPa/533°C to 536°C (1,800 psig/991°F to 996°F) compared to the non-CO_2 capture cases, which range from 12.4 MPa/562°C to 566°C (1,800 psig/1,043°F to 1,051°F).

3.1.9.4 Combustion Turbine Syngas Fuel Requirements

Typical fuel specifications and contaminant levels for successful CT operation are provided in GEP's "Specification for Fuel Gases for Combustion in Heavy-Duty Turbines" and presented for state-of-the-art 2008 F-class machines in Exhibit 3-8. [64] The vast majority of published CT performance information is specific to natural gas operation. Turbine performance using syngas requires vendor input as was obtained for this report.

Exhibit 3-8. Typical fuel specification for state-of-the-art 2008 F-class machines

	Max	Min
LHV, kJ/m^3 (Btu/scf)	None	3.0 (100)
Gas Fuel Pressure, MPa (psia)	3.1 (450)	
Gas Fuel Temperature, °C (°F)	[A]	Varies with gas pressure[B]
Flammability Limit Ratio, Rich-to-Lean, Volume Basis	[C]	2.2:1[D]
Sulfur	N/A[E]	

[A] The maximum fuel temperature is defined in GEK-4189 [65]
[B] To ensure that the fuel gas supply to the CT is 100 percent free of liquids the minimum fuel gas temperature must meet the required superheat over the respective dew point. This requirement is independent of the hydrocarbon and moisture concentration. Superheat calculation shall be performed as described in GEI-4140G [64]
[C] Maximum flammability ratio limit is not defined. Fuel with flammability ratio significantly larger than those of natural gas may require start-up fuel
[D] Below the minimum flammability ratio of 2.2:1, combustion instability over the full operating range of the turbine may be experienced
[E] The quantity of sulfur in syngas is not limited by specification. Experience has shown that fuel sulfur levels up to 1 vol% do not significantly affect oxidation/corrosion rates

3.1.9.5 Normal Operation

Inlet air is compressed in a single spool compressor to a pressure ratio of approximately 17.8:1 relative to ambient air intake. This pressure ratio was vendor specified and less than the 18.5:1 ratio used in natural gas applications. The majority of compressor discharge air remains on board the machine and passes to the burner section to support combustion of the syngas. Compressed air is also used in burner, transition, and film cooling services.

Pressurized syngas is combusted in 14 parallel diffusion combustors, and syngas dilution is used to limit NOx formation. As described in Section 3.1.2, power augmentation was accomplished by diluting the fuel gas with excess N_2 from the ASU and in some cases, also with N_2

humidification, until a turbine output of 232 MWe was attained. The advantages of using N_2 as the primary diluent include:

- N_2 from the ASU is already partially compressed and using it for dilution eliminates wasting the compression energy.
- Limiting the water content reduces the need to derate firing temperature, particularly in the high-H_2 (CO_2 capture) cases.
- Low-quality heat not otherwise useful for other applications can be used to preheat water for the N_2 humidification process.

There are some disadvantages to using N_2 as the primary diluent, and these include:

- There is a significant auxiliary power requirement to further compress the large N_2 flow from the ASU pressures of 0.5 MPa (65 psia) to the CT pressure of approximately 3.2 MPa (465 psia).
- N_2 is not as efficient as water in limiting NOx emissions.

It is not clear that one dilution method provides a significant advantage over the other. However, in this report N_2 was chosen as the primary diluent based on suggestions by turbine industry experts during peer review of the report.

Hot combustion products are expanded in the three-stage turbine-expander. Given the assumed ambient conditions, back-end loss, and HRSG pressure drop, the CT exhaust temperature is nominally 593°C (1,099°F) for non-CO_2 capture cases and 563°C (1,046°F) for capture cases. Gross turbine power, as measured after the generator terminals, is 232 MW per train.

3.1.10 Steam Generation Island

3.1.10.1 Heat Recovery Steam Generator

The HRSG is a horizontal gas flow, drum-type, multi-pressure design that is matched to the characteristics of the CT exhaust gas. High-temperature flue gas exiting the CT is conveyed through the HRSG to recover the large quantity of thermal energy that remains. Flue gas travels through the HRSG gas path and exits at 132°C (270°F) for all 7 cases.

The HP drum produces steam at main steam pressure, while the LP drum produces process steam. The HRSG drum pressures are nominally 12.4/0.3 MPa (1,800/50 psig) for the HP/LP turbine sections, respectively. In addition to generating and superheating steam, the HRSG performs reheat duty for the cold/hot reheat steam for the steam turbine, provides condensate and feedwater (FW) heating, and provides deaeration of the condensate.

Natural circulation of steam is accomplished in the HRSG by utilizing differences in densities due to temperature differences of the steam. The natural circulation HRSG provides the most reliable design.

The HRSG drums include moisture separators, internal baffles, and piping for FW/steam. All tubes, including economizers, superheaters, and headers and drums, are equipped with drains.

Safety relief valves are furnished in order to comply with appropriate codes and ensure a safe work place.

Superheater, boiler, and economizer sections are supported by shop-assembled structural steel. Inlet and outlet ducts are provided to route the gases from the CT outlet to the HRSG inlet and the HRSG outlet to the stack. A diverter valve is included in the inlet duct to bypass the gas when appropriate. Suitable expansion joints are also included.

3.1.10.2 Steam Turbine Generator and Auxiliaries

The steam turbine consists of an HP section, an intermediate-pressure (IP) section, and one double-flow LP section, all connected to the generator by a common shaft. The HP and IP sections are contained in a single-span, opposed-flow casing, with the double-flow LP section in a separate casing. The LP turbine has a last stage bucket length of 76 cm (30 in.).

Main steam from the HRSG and gasifier island is combined in a header, and then passes through the stop valves and control valves and enters the turbine at stream conditions shown in Exhibit 3-9. The steam initially enters the turbine near the middle of the HP span, flows through the turbine, and returns to the HRSG for reheating. The reheat steam flows through the reheat stop valves and intercept valves and enters the IP section at stream conditions shown in Exhibit 3-9.

Exhibit 3-9. IGCC steam conditions

Steam Conditions		
Steam Parameter	**Capture**	**Non-Capture**
Main Pressure, MPa (psig)	12.4 (1,800)	12.4 (1,800)
Main Temperature, °C (°F)	533-536 (991-996)	562-566 (1,043-1,051)
Reheat Pressure, MPa (psig)	3.3 (477)	3.3 (477)
Reheat Temperature, °C (°F)	533-536 (991-996)	562-566 (1,043-1,051)

After passing through the IP section, the steam enters a crossover pipe, which transports the steam to the LP section. The steam divides into two paths and flows through the LP sections, exhausting downward into the condenser.

Turbine bearings are lubricated by a closed-loop (CL), water-cooled, pressurized oil system. The oil is contained in a reservoir located below the turbine floor. During startup or unit trip, an emergency oil pump mounted on the reservoir pumps the oil. When the turbine reaches 95 percent of synchronous speed, the main pump mounted on the turbine shaft pumps oil. The oil flows through water-cooled HXs prior to entering the bearings. The oil then flows through the bearings and returns by gravity to the lube oil reservoir.

Turbine shafts are sealed against air in-leakage or steam blowout using a modern positive pressure variable clearance shaft sealing design arrangement connected to an LP steam seal system. During startup, seal steam is provided from the main steam line. As the unit increases

load, HP turbine gland leakage provides the seal steam. Pressure-regulating valves control the gland header pressure and dump any excess steam to the condenser. A steam packing exhauster maintains a vacuum at the outer gland seals to prevent leakage of steam into the turbine room. Any collected steam is condensed in the packing exhauster and returned to the condensate system.

The generator is a H_2-cooled synchronous type, generating power at 24 kV. A static, transformer type exciter is provided. The generator is cooled with a H_2 gas recirculation system using fans mounted on the generator rotor shaft. The heat absorbed by the gas is removed as it passes over finned tube gas coolers mounted in the stator frame. Gas is prevented from escaping at the rotor shafts by a CL oil seal system. The oil seal system consists of storage tank, pumps, filters, and pressure controls, all skid-mounted.

The steam turbine generator (STG) is controlled by a triple-redundant, microprocessor-based electro-hydraulic control system. The system provides digital control of the unit in accordance with programmed control algorithms, operator interface, and datalink interfaces to the balance-of-plant distributed control system (DCS) and incorporates on-line repair capability.

3.1.10.3 Condensate System

The condensate system transfers condensate from the condenser hotwell, through a series of economizers, to the deaerator. The economizers may exchange heat with either the tail-gas recycle coolers, LTHR system, and/or the low-temperature economizer section in the HRSG, depending on the case. The system consists of one main condenser; two 50 percent capacity, motor-driven, vertical condensate pumps; one gland steam condenser; and a low-temperature tube bundle in the HRSG. Condensate is delivered to a common discharge header through separate pump discharge lines, each with a check valve and a gate valve. A common minimum flow recirculation line discharging to the condenser is provided to maintain minimum flow requirements for the gland steam condenser and the condensate pumps.

3.1.10.4 Feedwater System

The function of the FW system is to pump the various FW streams from the deaerator storage tank in the HRSG to the respective steam drums. Two 50 percent capacity boiler feed pumps are provided for each pressure level (HP and LP). Each pump is provided with inlet and outlet isolation valves, and outlet check valve. Minimum flow recirculation to prevent overheating and cavitation of the pumps during startup and low loads is provided by an automatic recirculation valve and associated piping that discharges back to the deaerator storage tank. Pneumatic flow control valves control the recirculation flow.

The FW pumps are supplied with instrumentation to monitor and alarm on low oil pressure, or high-bearing temperature. FW pump suction pressure and temperature are also monitored. In addition, the suction of each boiler feed pump is equipped with a startup strainer.

3.1.10.5 Main and Reheat Steam Systems

The function of the main steam system is to convey main steam generated in the synthesis gas cooler (SGC) and HRSG from the HRSG superheater outlet to the HP turbine stop valves. The

function of the reheat system is to convey steam from the HP turbine exhaust to the HRSG reheater (RH), and to the turbine reheat stop valves.

Main steam at conditions shown previously in Exhibit 3-9 exits the HRSG superheater through a motor-operated stop/check valve and a motor-operated gate valve, and is routed to the HP turbine. Cold reheat steam at approximately 3.4 MPa/344°C to 367°C (487 psig/651°F to 692°F) exits the HP turbine, flows through a motor-operated isolation gate valve, to the HRSG reheater. Hot reheat steam at the conditions shown previously in Exhibit 3-9 exits the HRSG RH through a motor-operated gate valve and is routed to the IP turbines.

Steam piping is sloped from the HRSG to the drip pots located near the steam turbine for removal of condensate from the steam lines. Condensate collected in the drip pots and in low-point drains is discharged to the condenser through the drain system.

Steam flow is measured by means of flow nozzles in the steam piping. The flow nozzles are located upstream of any branch connections on the main headers.

Safety valves are installed to comply with appropriate codes and to ensure the safety of personnel and equipment.

3.1.10.6 Circulating Water System

The circulating water system (CWS) is a closed-cycle cooling water system that supplies cooling water to the condenser to condense the main turbine exhaust steam. The system also supplies cooling water to the AGR plant as required, and to the auxiliary cooling system. The auxiliary cooling system is a CL process that utilizes a higher quality water to remove heat from compressor intercoolers, oil coolers, and other ancillary equipment and transfers that heat to the main circulating cooling water system in plate and frame HXs. The heat transferred to the circulating water in the condenser and other applications is removed by a mechanical draft cooling tower.

The system consists of two 50 percent capacity vertical circulating water pumps (CWPs), a mechanical draft evaporative cooling tower, and CS cement-lined interconnecting piping. The pumps are single-stage vertical pumps. The piping system is equipped with butterfly isolation valves and all required expansion joints. The cooling tower is a multi-cell wood frame counterflow mechanical draft cooling tower.

The condenser is a single-pass, horizontal type with divided water boxes. There are two separate circulating water circuits in each box. One-half of the condenser can be removed from service for cleaning or for plugging tubes. This can be done during normal operation at reduced load.

The condenser is equipped with an air extraction system to evacuate the condenser steam space for removal of non-condensable gases during steam turbine operation and to rapidly reduce the condenser pressure from atmospheric pressure before unit startup and admission of steam to the condenser.

3.1.10.7 Raw Water, Fire Protection, and Cycle Makeup Water Systems

The raw water system supplies cooling tower makeup, cycle makeup, service water and potable water requirements. The water source is 50 percent from a POTW and 50 percent from groundwater (makeup water quality is provided in Section 2.1). Booster pumps within the plant boundary provide the necessary pressure.

The fire protection system provides water under pressure to the fire hydrants, hose stations, and fixed water suppression system within the buildings and structures. The system consists of pumps, underground and aboveground supply piping, distribution piping, hydrants, hose stations, spray systems, and deluge spray systems. One motor-operated booster pump is supplied on the intake structure of the cooling tower with a diesel engine backup pump installed on the water inlet line.

The cycle makeup water system provides high-quality demineralized water for makeup to the HRSG cycle, for steam injection ahead of the WGS reactors in CO_2 capture cases, and for N_2 humidification, if required.

The cycle makeup system consists of two 100 percent trains, each with a full-capacity activated carbon filter, primary cation exchanger, primary anion exchanger, mixed bed exchanger, recycle pump, and regeneration equipment. The equipment is skid-mounted and includes a control panel and associated piping, valves, and instrumentation.

3.1.11 Accessory Electric Plant

The accessory electric plant consists of switchgear and control equipment, generator equipment, station service equipment, conduit and cable trays, and wire and cable. It also includes the main power transformer, all required foundations, and standby equipment.

3.1.12 Process Water Systems

3.1.12.1 Process Water Sources

This section provides brief technology descriptions of equipment that produces process wastewater from IGCC plants, including the syngas scrubber, LTHR, SWS, NH_3 wash, and process water drum.

3.1.12.1.1 Syngas Scrubber

The majority of PM is removed from the syngas by upstream equipment, leaving only the finest particulates remaining prior to the syngas scrubber. Most of the remaining particulate is removed in the scrubber, although the primary concern of the syngas scrubber is to facilitate high efficiency gas cleaning by maximizing the contact surface area between liquid and gas, as gases such as HCl are eliminated through absorption into the scrubbing liquid, which in this case is an alkali solution of water and NaOH.

An HP ejector venturi scrubber is particularly suitable for high efficiency gas cleaning in HP operations and is frequently selected to facilitate this process, with expected HCl removal efficiencies in excess of 95 percent. [66] [67]

Exhibit 3-10 provides a diagram of an ejector type venturi scrubber. The gas enters the top section of the system where it comes into contact with a spray of fine water droplets, the spray is directed into a chamber that is shaped to conduct the gas through the atomized droplets, [68] where the HCl and other soluble gases are absorbed. The majority of the remaining particulates are removed from the gas stream by impingement against the relative high velocity droplets. The liquid is collected in a reservoir and the gas exits the side of the reservoir opposite the entrance. The liquid is pumped from the reservoir through a settling tank for particulate removal before being recycled.

Exhibit 3-10. Example diagram of an ejector type venturi scrubber

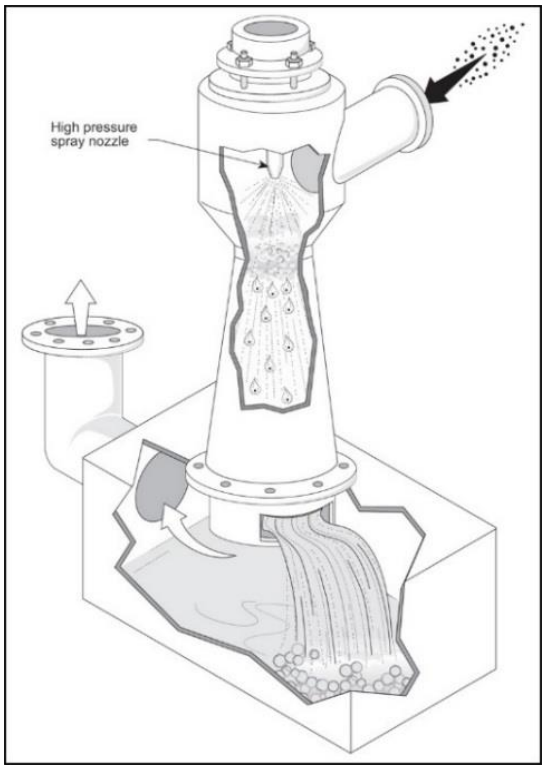

Source: EPA [69]

The ejector type venturi scrubbers are typically constructed of 316L stainless steel, operate with a relatively low pressure drop (approximately 2–3 percent of the inlet pressure) [70], have a liquid injection pressure of around 0.83 MPa (120 psi) above that of the inlet gas stream [68], and require between 30 and 100 gallons per 1,000 ft^3 of inlet gas. [66]

While 316L stainless steel has a very high tolerance to alkali solutions without concern for corrosion (concentrations of NaOH of up to 50 wt% can be used with negligible corrosion rates [71]), it can only withstand up to 2,000 ppmw of chloride ions (Cl^-). Considering the cost of the downstream ZLD equipment, priority was given to maximizing the chloride concentration and minimizing the process water discharge flow rate. Because 317L stainless steel can withstand up to 5,000 ppmw Cl^-, it was selected as the material of choice for the scrubber system. [72] The blowdown from the syngas scrubber is adjusted to maintain a Cl^- concentration of 5,000 ppmw, or lower.

While the tolerance of both 316L and 317L to alkali solutions is very high, the pitting rate of both steels rapidly increases with decreasing pH. At a pH of 5, severe pitting occurs with chloride concentrations as low as 500 ppmw. [73] In order to prevent excessive pitting, it is recommended that sufficient NaOH be added in the makeup water to maintain an alkali solution in the effluent. [66] [74]

Exhibit 3-11 provides a simplified block flow diagram (BFD) of the syngas scrubber system, including the alkali injection, makeup water, blowdown, and recycle. The alkali solution is assumed to be 50 wt% NaOH in water. The final cooling water HX cools the injection water to 21.1°C (70°F). The two process HXs are integrated with the syngas preheating system prior to the combustion turbine and the WGS FW preheating system. The makeup water to the syngas scrubber is sourced from either raw water, ZLD condensate, or process wastewater, depending on the selection of technologies utilized in each case. For cases that utilize raw water as the source of the makeup water, the first process HX is excluded.

Exhibit 3-11. Simplified syngas scrubber block flow diagram

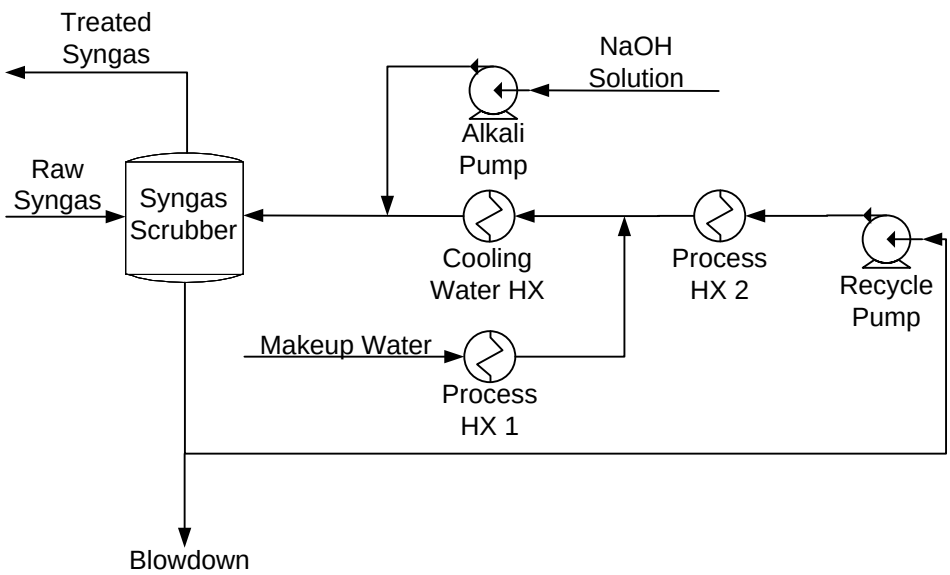

3.1.12.1.2 Low Temperature Heat Recovery

The gas exiting the WGS or COS hydrolysis reactors enters the LTHR system before entering the NH_3 wash. The purpose of the LTHR system is to cool the syngas to the required operating temperature of the mercury control system, the NH_3 wash and the AGR system, while recovering low grade heat.

As shown in Exhibit 3-12, LTHR consists of a series of shell-and-tube HXs; [75] depending on the inlet temperature, the LTHR system consists of one to three process integrated HXs, followed by a final heat exchange with cooling water. [76]

Exhibit 3-12. Simplified low temperature heat recovery system

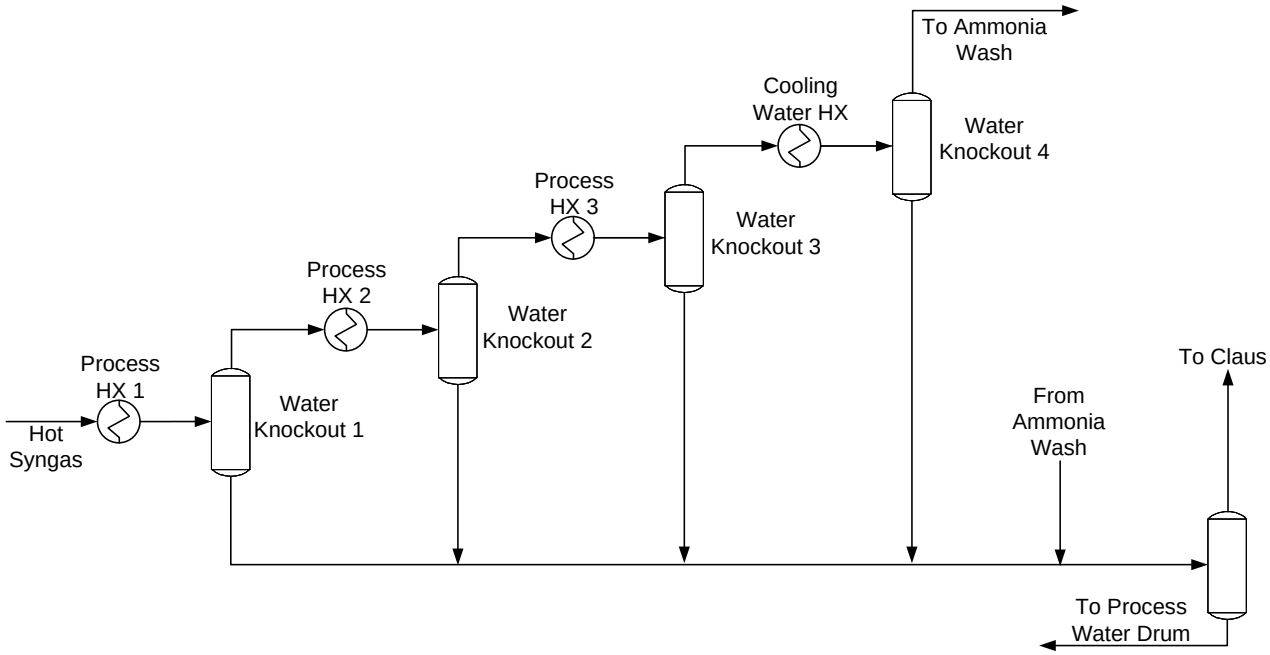

During cooling, a significant amount of water is condensed, along with between 35 and 65 percent of the NH_3 present at the inlet and nearly all the remaining HCl, leaving only trace amounts. Small amounts of CO_2, H_2, and H_2S are also removed. Knockout drums are located after each HX to remove condensed water.

The effluent from the LTHR system is combined with that of the NH_3 wash and is flashed to 0.5 MPa (65 psia). The vapor product is combined with the compressed sour gas from the SWS and sent to the Claus plant for incineration. The effluent from the flash drum is sent to the process water collection drum for use as process water recycle.

The first of the LTHR HXs is used to produce low pressure steam, which is used in the steam cycle, and the second of the LTHR HXs is used in several systems, depending on the plant configuration, and can include WGS steam preheat, slurry water preheat, gasifier water preheat, syngas preheat prior to the combustion turbine, N_2 humidifier water preheat, and steam cycle FW preheat. The third LTHR HX is used to preheat steam cycle FW.

To withstand the NH_3 concentration in the effluent, which can approach 60,000 ppmw, 316L stainless steel was selected as the material of construction for its high tolerance to NH_3, as discussed in Section 3.1.12.1.4.

3.1.12.1.3 Sour Water Stripper

As NH_3 is a highly soluble gas, it has a tendency to build-up in the plant process water. The primary solution is to utilize process water as makeup water to the gasifier (slurry water) where it will be destroyed; however, several cases utilize combinations of technologies that result in the presence of excess water from the process water collection drum that necessitates the utilization of a SWS to remove NH_3, H_2S, and other dissolved gases, so that the process water can be utilized as makeup water to downstream systems such as the NH_3 wash.

The presence of acids, chlorides, sulfates, and formates suppress NH_3 stripping. [77] Since small quantities of HCl are present in the sour water as a result of the LTHR effluent (discussed in 3.1.12.1.2), which reacts with NH_3 to form ammonium chloride (NH_4Cl), small amounts of NaOH may be added to react with the NH_4Cl, releasing the NH_3 and producing the heat stable salt (HSS) sodium chloride (NaCl). [77] The caustic would be fed onto a tray far enough down the column that most of the H_2S has already been stripped out (tray 35 of 40). No more NaOH should be injected than is necessary to maintain pH, as it will chemically bind H_2S into the solution. [77] Other alkaline contaminants that can trap H_2S include sodium, potassium, and magnesium; however, they were assumed to be present in negligible quantities in this report.

HSS can cause the protonation of NH_3 and, therefore, cause a residual amount of NH_3 that cannot be removed (as little as 300 ppmw of HSS can prevent the treated water from reaching NH_3 concentrations of below 100 ppmw), which limits the usefulness of the effluent as recycle water. However, HSS can significantly improve H_2S removal rates, as they are weak acids. [77]

Despite the reasons presented above for adding caustic to the SWS, there are also potential adverse consequences, including a negative impact on the removal of H_2S, the fact that NaOH reacts with HCl to form NaCl, and the beneficial role that the presence of HCl can have on H_2S removal. Based on the net impacts, it was determined that the addition of NaOH would not be necessary and would not be utilized in this report.

A selection of typical values for key operating parameters for a SWS are provided in Exhibit 3-13.

Exhibit 3-13. Typical operating parameters for sour water strippers

Parameter	Typical
Column Stages [77]	35-45
NH_3 in Effluent, ppmw [77]	30-80
H_2S in Effluent, ppmw [78]	<<1
Steam/Sour Water Feed, kg/m^3 (lb/ft^3) [78]	60-300 (3.7-18.7)
Column Operating Pressure, MPa (psia) [78]	0.1-0.5 (16-65)
pH of Sour Water Feed [77]	~9

Exhibit 3-14 provides a diagram of an SWS column. The excess water from the process water collection drum (described in Section 3.1.12.1.5) constitutes the sour water feed stream to the SWS. The sour water feed is preheated against the treated water product effluent prior to being injected at the top of the column. The sour water flows downward through the column packing [78] against an up-flow of sour gases and steam. A portion of the bottom water is recycled through the reboiler back to the column to increase the rate of recovery of the sour gases. The vapor product is passed through a partial-vapor condenser with the sour gases being separated from the condensate in the reflux drum. The condensate is returned to the column to increase the retention rate of water in the column.

Exhibit 3-14. Simplified sour water stripper diagram

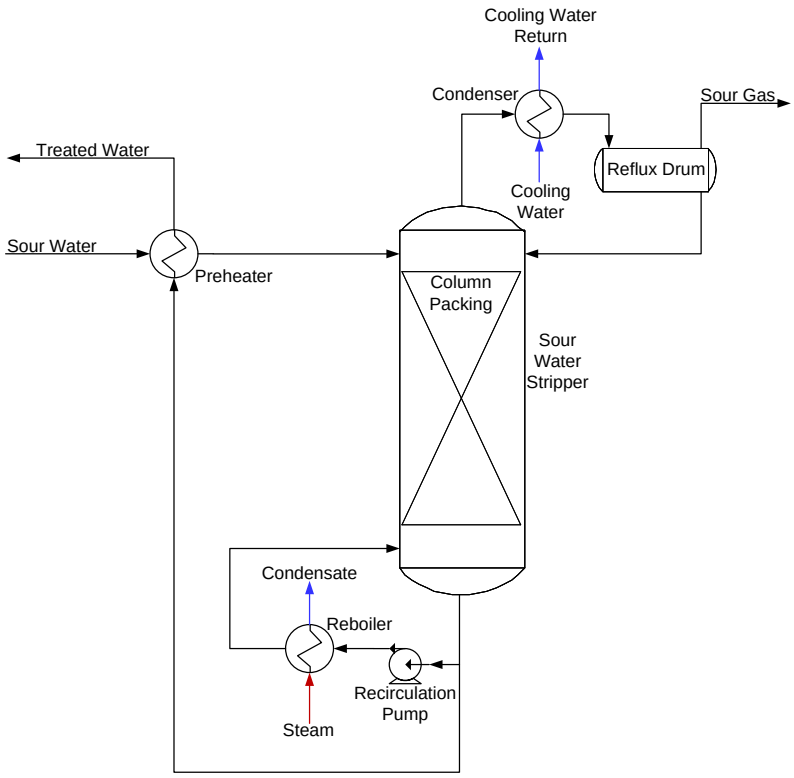

To withstand the NH_3 concentration in the sour water feed stream, which can exceed 20,000 ppmw, 316L stainless steel was selected as the material of construction for its high tolerance to NH_3, as discussed in Section 3.1.12.1.4.

The sour water is fed to the SWS above the first stage at 0.4 MPa (65 psia), with the sour gas produced at 0.11 MPa (16 psia) and the effluent produced at stage 40 at 0.15 MPa (22 psia). The SWS utilizes an external kettle-type reboiler with 0.4 MPa (65 psia) process steam used as its heat source. [77] The partial-vapor condenser receives cold water from the cooling tower at 16°C (60°F) and the water is returned to the cooling tower at 27°C (80°F).

The SWS is designed to recover 99.5 mol% of NH_3 while retaining 99.6 mol% of water. Only trace amounts of other dissolved gases remain, including H_2S. The sour gas is sent to the Claus plant for incineration, and the clean effluent is used as wash water in the NH_3 wash system.

3.1.12.1.3.1 Secondary Sour Water Stripper

In several cases, the selected combination of plant technologies resulted in excess process wastewater that required disposal. However, to qualify for ZLD, this wastewater needed to be utilized as process makeup water. As several gasifier technologies require steam addition at elevated pressure (~5.1 MPa [~740 psia]), it was determined that the production of mid-grade steam from process water would be beneficial, rather than extracting high-grade steam and letting it down to the required pressure.

The use of raw process water presents multiple design and operation issues, as these streams contain appreciable quantities of dissolved solids, which would cause fouling on the surface of the boiler tubes. Of particular concern is the presence of NaCl, which is typically limited to 10 ppmw in the boiler water feed. [79] In order to avoid this, the feed to the secondary SWS was sourced from the condensate of the ZLD processes (discussed in Section 3.1.12.2). This effluent is free from suspended solids, and contains less than 20 ppm of dissolved solids, consisting primarily of sodium- and calcium-based constituents. It is assumed that the sodium-based constituents comprise less than half of the total dissolved solids. Therefore, the only contaminant of concern is NH_3, which is limited to 200 ppmw at the desired operating pressure. [79]

The design of the secondary SWS is nearly identical to that of the primary SWS. The only two differences being that the secondary SWS operates with a feed pressure of 0.18 MPa (26.4 psia) and the column is designed to achieve an effluent with an NH_3 concentration of 200 ppmw. The sour gas from the secondary SWS is compressed and sent to the Claus plant for incineration.

3.1.12.1.4 NH_3 Wash

The operation of solvent-based AGR systems is sensitive to the presence of NH_3, which has a tendency to concentrate in the CO_2 reflux loop. [80] NH_3 forms ammonium sulfide with H_2S that is a contaminant in the product CO_2 and the off gas, and it can form ammonium carbamate with CO_2 that can cause plugging of equipment. [81] If concentrations are allowed to build-up to the point that performance starts to be impacted, the conventional recovery measure would consist of blowing down a portion of the reflux stream, which would then be disposed. [80]

In order to minimize the loss of solvent and to maximize performance of the AGR, a pre-scrubber for NH_3 control is typically utilized to maintain NH_3 concentrations at or below 10 ppmv in the syngas. [80] [82] [83] A spray tower absorption column is often the scrubber of choice for highly soluble gases, such as NH_3, in systems that operate at low temperatures. [84] [80] [76]

NH_3, like HCl, is eliminated through absorption into the scrubbing liquid, [67] and as such, the efficiency of scrubbers increases with decreasing temperature; typical scrubber operating temperatures are around 26.7–29.4°C (80–85°F). [85] In order to achieve this, a cooling stage is included in the low temperature HX design (discussed in Section 3.1.12.1.2) that lowers the temperature to 29.4°C (85°F) and the wash water is cooled to 21.1°C (70°F) in a HX prior to injection.

A single-stage system can expect to achieve between 70 [80] and 85 [85] percent NH_3 reduction, with a typical configuration consisting of approximately 5 stages, [85] which can achieve total NH_3 reduction of over 99 percent. [85] To achieve the target concentration of NH_3 in the clean syngas of 10 ppm, 4 stages were required.

Exhibit 3-15 provides a diagram of an example spray tower absorption column. The spray tower operates by having a counter-current raw gas flow upward against a downward fine-mist spray of water. The water functions to both cool the syngas and absorb the NH_3, along with other soluble gases. The cleaned gas exits the top of the column and the water exits the bottom. To

maximize NH_3 removal, the water is not recycled but is instead sent to a process water collection drum (discussed in Section 3.1.12.1.5) to be utilized as process water makeup. The water demand for the spray tower is primarily sourced from the effluent of the SWS, [86] [85] with raw water making up the balance, as necessary.

Exhibit 3-15. Example diagram of a spray tower absorption column

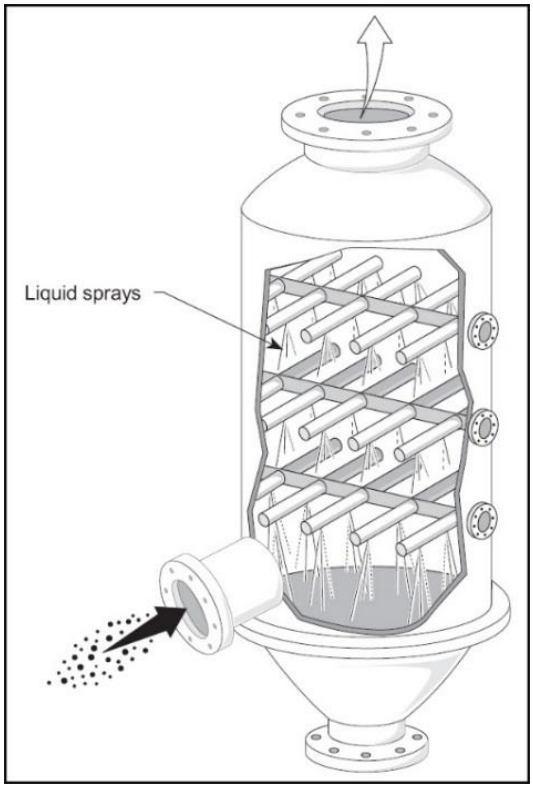

Source: EPA [69]

The NH_3 water wash column has the same relative pressure drop and water to gas ratio as the syngas scrubber, described in Section 3.1.12.1.1.

While spray scrubbers are generally constructed of carbon steel, [86] 316L stainless steel is recommended for high NH_3 concentration applications. [87] Considering the concentration of NH_3 can exceed 20,000 ppmw in the scrubber effluent, 316L stainless steel was the material of choice for this study (no significant deterioration occurs in the presence of NH_3 at concentrations as high as 6 percent [60,000 ppmw]). [88]

3.1.12.1.5 Process Water Drum

The process water drum, depicted in Exhibit 3-16, is a collection tank and distribution point for process wastewater. The process water from various sources such as the Claus plant, ZLD process water treatment system, and NH_3 wash are collected together before being distributed to processes with a water demand, such as the syngas scrubber, coal slurry, and gasifier.

Exhibit 3-16. Example diagram of a process water drum

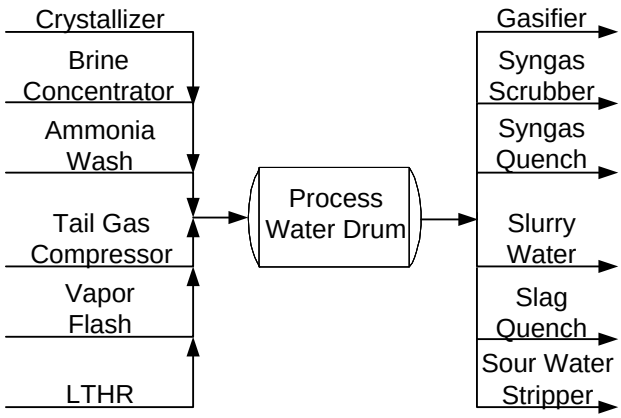

As is the case with the process wastewater sources, the process water drum would be subjected to a high concentration of NH_3 in the process water (greater than 20,000 ppmw). Therefore, 316L stainless steel is utilized as the material of construction, due to its high tolerance for NH_3, as discussed in Section 3.1.12.1.4.

3.1.12.1.6 Gasification Wastewater Quality

Gasification wastewater quality, summarized in Exhibit 3-17, represents the assumed quality of the water exiting the syngas scrubber that must be treated under the ELG rule, as stated earlier in Section 2.4.2. The gasification water quality is based on internal information from Black & Veatch IGCC projects utilizing a GE gasifier and discussions with GEP regarding their experience with gasification wastewater. Exhibit 3-17 includes a range of values, an average, and the final selected gasification wastewater quality.

The wastewater composition reported in the following table is based on water qualities from actual operations and adjusted to account for chloride. The design concentration of each constituent is individually representative of a plant configuration comparable to those in this study. However, due to the interaction and interdependencies of each constituent and the multitude of potential species, the wastewater quality cannot be considered representative as a whole. The wastewater quality is intended to inform users of the contaminants likely present, and at what concentrations they may be expected at, to facilitate appropriate equipment selection and design.

Exhibit 3-17. Gasification wastewater quality

Parameter	Gasification Wastewater (Range)	Gasification Wastewater (Average)	Gasification Wastewater (Final)
pH	5.5–7.0		7.0
Chemical O_2 demand, ppm		1,500	1,500
Biological O_2 demand, ppm		1,000	1,000
Specific Conductance, µS/cm			14,000
Ammonia as N, ppm		<80	<80
Suspended Solids, ppm		<50	5
Total Dissolved Solids, ppm			14,995
Chloride as Cl, ppm		5,000	5,000
Sodium as Na, ppm		3,250	3,250
Formate, ppm		3,200	5,333
M-Alkalinity as $CaCO_3$, ppm[A]	600–2,000		700
Calcium as Ca, ppm	20–270		270
Sulfate as SO_4, ppm	25–100		100
Silica as SiO_2, ppm	25–50		50
Barium (total), ppm	0.20–40	20	40
Magnesium as Mg, ppm	4–20		20
Aluminum, ppm			20
Boron (total), ppm	2.5–10	5	10
Iron (total), ppm	2.5–10	5	10
Selenium (total), ppm	2.5–10	5	10
Sulfide, ppm		<10	<10
Cyanide, ppm		<5	<5
Chromium (total), ppm	0.5–2.0	1	2
Phosphorus, ppm	0.5–2.0	1	2
Potassium, ppm			2
Fluorine, ppm			2
Nickel (total), ppm	0.1–1.0	0.5	1
Molybdenum (total), ppm	0.2–0.8	0.4	0.8
Titanium (total), ppm	0.2–0.8	0.4	0.8
Lithium, ppm			0.3
Antimony (total), ppm	0.005–0.200	0.1	0.2
Arsenic (total), ppm	0.005–0.200	0.1	0.2
Lead (total), ppm	0.05–0.2	0.1	0.2
Thallium (total), ppm	0.05–0.2	0.1	0.2

Parameter	Gasification Wastewater (Range)	Gasification Wastewater (Average)	Gasification Wastewater (Final)
Vanadium (total), ppm	0.025–0.1	0.05	0.1
Uranium, ppm			0.1
Cobalt, ppm			0.1
Manganese (total), ppm	0.015–0.06	0.03	0.06
Beryllium (total), ppm	0.01–0.04	0.02	0.04
Copper (total), ppm	0.01–0.04	0.02	0.04
Zinc (total), ppm	0.01–0.04	0.02	0.04
Thorium, ppm			0.04
Cadmium (total), ppm	0.005–0.02	0.01	0.02
Tin, ppm			0.02
Mercury (total), ppm	0.002–0.008	0	0.01

[A]Alkalinity is reported as $CaCO_3$ equivalent, rather than the concentration of HCO_3. The concentration of HCO_3 can be obtained by dividing the alkalinity by 0.82

The gasification wastewater composition will be dependent on several factors, including composition of the coal, makeup water quality, syngas treatment systems that recycle water to the syngas scrubber, and other factors. The wastewater quality defined above will form the basis for discussion of the process water treatment systems, discussed in the following section.

3.1.12.2 Process Water Treatment

The updated ELG rule established gasification wastewater as a new category, with discharge limits that must be met. The gasification wastewater from the balance of plant is recycled within the gasification and syngas cleanup process, ultimately being utilized as makeup to the syngas scrubber. Therefore, all streams detailed in the updated ELG rule are included in the syngas scrubber blowdown (primary sources are described in Section 3.1.12.1) and can be treated by a single system with a composition described in Section 3.1.12.1.6.

It was a goal of this study to eliminate process water discharge in all the IGCC cases presented in this report. Process water discharge is defined as any water discharged from systems that provide direct contact with contaminants foreign to the source-water (syngas scrubber, NH_3 wash, LTHR) to local waterways. Under these boundaries, blowdown from both the steam cycle and cooling tower are exempt from ZLD classification, provided that no process wastewater is utilized as makeup to either of these systems.

The equipment utilized to achieve ZLD is varied and dependent on several factors, such as contaminants being treated (e.g., selenium or chlorine), general water quality (e.g., pH), end use of product (e.g., process makeup or drinking water), land availability (evaporative ponds), geology characteristics (e.g., deep-well injection), and site characteristics (e.g., wetlands).

Wabash River, Kemper County, and Duke Edwardsport were designed with, and use, vapor-compression evaporation systems to treat their gasification wastewater as part of a ZLD operating practice. [19]

While multiple process configurations were assessed for feasibility of complying with the ELG rule, given this study's intention of maintaining general applicability of the cases presented, and the prevalence of utilizing ZLD operating practices in existing IGCC plants, systems that would achieve ZLD were selected in all cases.

The process water treatment system for IGCC cases includes a vacuum flash, brine concentrator, and crystallizer.

3.1.12.2.1 Vacuum Flash

The primary purpose of the vacuum flash system is to remove dissolved gases, such as NH_3, CO, H_2, and H_2S. The separation of dissolved gases prior to the brine concentrator aids in maintaining stable operation and avoiding upsets. Considering the desire to utilize the ZLD system condensate as FW to the auxiliary boiler, and the sensitivity of the auxiliary boiler to NH_3 (discussed in 3.1.12.1.3), it is particularly desirable to remove as much NH_3 as possible prior to the brine concentrator.

Exhibit 3-18 provides a diagram of a vacuum flash system. The blowdown from the syngas scrubber enters the LP drum where it is flashed to 0.5 MPa (70 psia). [89] The effluent of the LP drum enters the vacuum drum, where it is flashed to 0.05 MPa (7.5 psia). The effluent from the vacuum drum is then sent to the brine concentrator. The vapor overhead from both the LP and vacuum drums is cooled in a process integrated HX first, and then a cooling water HX. The vacuum flash is compressed in a vacuum pump before both overhead (OH) streams are sent to the overhead drum, where they are flashed to 0.24 MPa (35 psia). [89] The vapor overhead from the OH drum is sent to the Claus plant for incineration, and the effluent is sent to the process water drum.

Exhibit 3-18. Simplified diagram of vacuum flash system

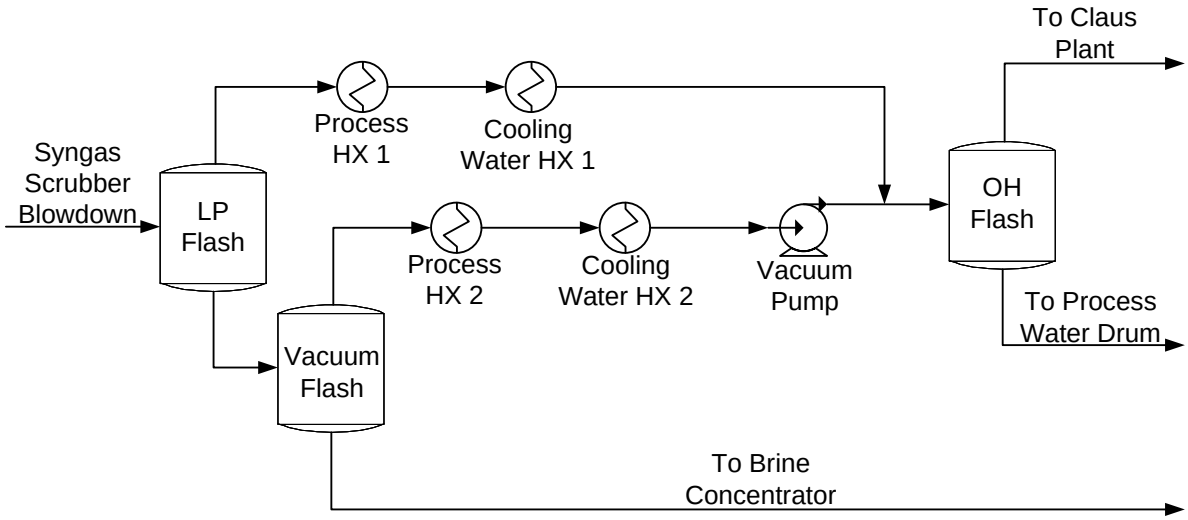

Both process HXs are integrated with the syngas preheater prior to the combustion turbine. Both cooling water HXs condense the vapor overhead streams by cooling them to 29.4°C (85°F).

While the syngas scrubber limits the chloride concentration of the blowdown stream to 5,000 ppmw, a portion of the water present in the blowdown will be lost with the NH_3 in the LP and vacuum flash drums, resulting in an increased chloride concentration in the effluent of the LP and vacuum flash drums.

Excluding Case B5B-Q, which has a maximum chloride concentration at the vacuum effluent of 3,634 ppmw, both the effluent from the LP flash drum (5,621 ppmw in Case B5B) and vacuum flash drum (6,410 ppmw in Case B5B) exceed the chloride tolerance of 317L stainless steel (5,000 ppmw). Therefore, a more advanced stainless steel will be required in both the LP and vacuum flash drum, such as 317LM or 317LMN. [90] The OH flash drum is required to be constructed of 316L stainless steel due to the high concentration of NH_3 (greater than 40,000 ppmw), as discussed in Section 3.1.12.1.2.

3.1.12.2.2 Brine Concentrator

A brine concentrator is a thermal evaporation process that is often selected as a component of a wastewater treatment system and is utilized as the first step in this study. There are two primary categories of evaporators used in the wastewater treatment industry: thin film and forced circulation. Most brine concentrators in operation are thin film evaporators configured to use a mechanical vapor compression vertical tube evaporation process, which partially evaporates water from the incoming waste stream and leaves behind a concentrated salt solution.

As NaOH is used for HCl scrubbing (discussed in Section 3.1.12.1.1), the wastewater contains primarily sodium-based salts, which are easy to crystallize compared to calcium- and magnesium-based salts, which are highly soluble and difficult to evaporate to a solid product. Therefore, the system can achieve full ZLD without a purge from the crystallizer.

Due to the nature of the salts and the low total suspended solids[g] (5 ppmw) in gasification wastewater, pretreatment upstream of the brine concentrator is not required. However, gasification wastewater typically contains constituents that will precipitate from solution within the brine concentrator when heated, adhering to the evaporator surface. While a seeded slurry process can be used to reduce precipitation on tube walls (calcium sulfate is added as a precipitation surface for low solubility salts), scaling cannot be completely eliminated through this method. Therefore, antiscalant addition was selected over seeding, which is fed at multiple points in the system.

To minimize carryover into downstream equipment, an antifoam is added to prevent foaming caused by biological O_2 demand, chemical O_2 demand, and other organics.

Lastly, sulfuric acid is added to prevent fouling and corrosion, as well as maintain consistent brine properties.

Exhibit 3-19 provides a depiction of a brine concentrator [91] and consists of a HX, heat transfer tubes, sump, sump pump, and compressor. The process water (depicted as “Wastewater”) from

[g] The feedwater to the brine concentrator is limited to 50 ppmw TSS to prevent plugging the inlet plate and frame heat exchanger.

the vacuum flash is pumped (not shown) through a HX, where its temperature is raised to the boiling point by the distillate product of the brine concentrator. While the depiction shows a deaerator following the HX, it is not included in the design utilized in this study as the vacuum flash serves the same purpose of removing dissolved gases. From the HX, the process water enters the brine concentrator and is combined with the brine slurry in the sump. The brine slurry is recirculated from the sump to a floodbox at the top of a bundle of heat transfer tubes. [92] As the brine falls through the heat transfer tubes to the sump, a portion of the water evaporates and passes through a mist eliminator (not shown) before entering the vapor compressor. [92] The compressed vapor is sent to the outside of the heat transfer tubes where it is condensed against the brine falling inside the tubes. The condensed distillate is pumped back through the HX, where it heats the incoming process water. A small amount of waste brine is blown down from the sump to control the total dissolved solids (TDS). [92]

Exhibit 3-19. Example diagram of a brine concentrator

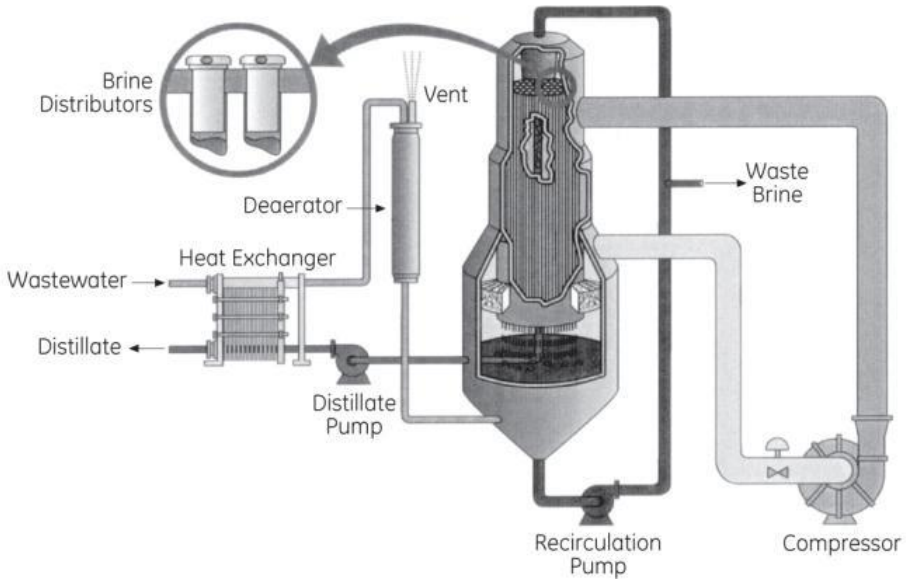

Copyright General Electric Company; used with permission. [91]

The brine concentrator is expected to produce an effluent with up to 500,000 TDS [93], with typical performance achieving between 200,000 and 300,000 TDS. [94] Given the elevated operating temperature and the use of NaOH in the upstream syngas scrubber for salt conversion, along with the high solubility of NaCl, it was assumed that 250,000 TDS would be achievable.

The brine concentrator operates at ambient pressure, and the vapor compressor varies the outlet pressure to ensure that sufficient heat is available to preheat the incoming process wastewater (~0.14 MPa [~20 psia]).

The brine concentrator must be constructed out of exotic materials to withstand the corrosive nature of the highly concentrated product stream. Either Inconel 625 or Hastelloy C276 can be used for piping and equipment construction; however, titanium would be required for the HX tubes.

3.1.12.2.3 Crystallizer

A crystallizer is often selected as a component of a wastewater treatment system and is utilized as the second step in this study. Exhibit 3-20 provides a depiction of a forced-circulation, steam-driven crystallizer [91] and consists of two HXs and a pump.

Exhibit 3-20. Example diagram of a forced-circulation, steam-driven crystallizer

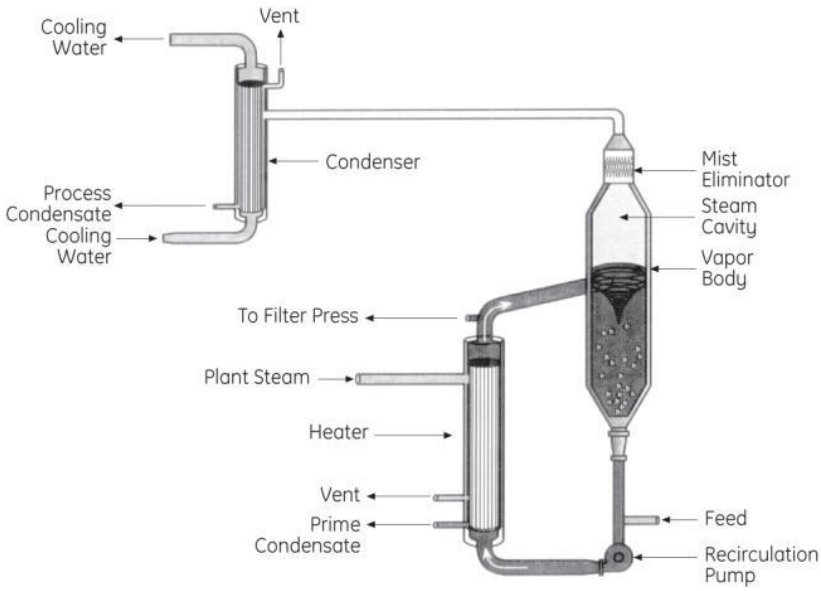

Copyright General Electric Company; used with permission. [91]

The process water (depicted as feed) from the brine concentrator is sent to the crystallizer sump, where the sump pump circulates the brine through a shell and tube HX. Because the tubes are flooded, the brine is under pressure and will not boil, which prevents scaling in the tubes. [91] The brine enters the crystallizer vapor body at an angle, where it swirls in a vortex. [91] As the water in the brine evaporates, crystals begin to form. The majority of the brine is recirculated back to the heater; however, approximately 20 percent [91] is blown down to the centrifuge/filter press for dewatering (depicted as "To Filter Press", but not shown). The water from the centrifuge and filter press is returned and mixed with the process water feed from the brine concentrator (not shown). The vapor from evaporation passes through a mist eliminator to remove entrained particles. [92] The product vapor is sent to a HX to be condensed against cooling water. The hot cooling water is returned to the cooling tower and the resulting condensate is utilized as process water makeup. An antifoam chemical feed is required to control foaming within the crystallizer.

An alternative configuration is to use a vapor compressor, rather than plant process steam, to provide heat to the system. In this alternative configuration, the compressed vapor heats the recirculating brine as it condenses. [92] The advantages of this process are the elimination of the condensing HX and process steam extraction in exchange for an electrical auxiliary load. Considering the energy penalties of using an electrical compressor versus process steam, along with the concern of sufficient vapor product to provide heat to the system, it was determined that a steam-driven crystallizer was most suitable for the cases in this study.

As with the brine concentrator, the crystallizer operates at ambient pressures and requires exotic materials of construction to withstand the corrosive concentrations of brine. Either Inconel 625 or Hastelloy C276 can be used for piping and equipment construction; however, titanium would be required for HX tubes.

The use of sulfuric acid for pH control in the brine concentrator results in the elimination of NaOH and the production of Na_2SO_4, which is removed as a dissolved solid in the moisture of the salt cake. It is assumed that the impurities present in the gasification wastewater result in a waste product, rather than a salable product, which is transported off-site to a waste-disposal site.

The combined distillate stream from the brine concentrator and crystallizer has a TDS level of less than 20 ppmw, generally consisting primarily of sodium and calcium as carryovers. For the purposes of this study, it is assumed that the combined distillate consists of less than 10 ppmw NaCl.

3.1.12.2.4 Alternative Treatment Methods

In addition to the purification and recycling approach applied to IGCC cases in this report, deep-well injection and evaporating ponds were also considered, and discussion is provided below.

Deep-well injection is a proven technology in municipal and industrial applications which discharges wastewater under pressure into underground porous rock formations through Class 1 wells. Strata of impermeable rock are used to protect underground sources of drinking water from the injected wastewater. A survey of the local geology is, therefore, required to determine the depth to which the well must be drilled and ultimately operated. Capital cost for the equipment and the electrical power consumed by the system would depend on the depth of the well. Disposal of wastewater by this method is regulated and requires that the facility apply for and receive a permit.

Based on the potentially adverse impacts to surface water and groundwater, geological and legal restrictions, and increasing disposal costs, deep well injection was excluded from further evaluation as a viable treatment option in this study.

Evaporation ponds can be constructed to dispose of wastewater if sufficient plot space is available, which is greatly impacted by local ambient conditions. A key determining factor in assessing the viability of an evaporation pond at a specific location is the difference between average rainfall and average evaporation at that location, as the pond needs to be large enough to contain the volume of the discharged wastewater, as well as rain water. In addition, the pond must have enough surface area to allow for average evaporation rates to be equal to or greater than the total inflow of water.

Parts of the Midwest region could be considered a cold, semi-arid climate, which indicates that the summers can be either warm or hot, but the winters tend to be colder, compared to hot, semi-arid or hot, arid climates. Therefore, winter evaporation would be less available. Moreover, other parts of the Midwest region fall into humid, subtropical and humid, continental climate types. The humidity and higher rainfall averages compared to the arid climates are not

favorable for the installation of evaporation ponds. Therefore, evaporation ponds were excluded from further evaluation as a viable treatment option in this study.

While both evaporating ponds and deep-well injection offer low cost solutions with low auxiliary loads, neither option addresses water consumption, and in many regions of the country the availability of fresh water is limited—therefore, it is desirable to restrict the consumption of, and discharge into the available fresh water. By recycling what would otherwise be water discharge, the amount of water withdrawal required can be reduced considerably.

3.1.13 Waste Treatment/Miscellaneous Systems

An onsite water treatment facility treats all runoff, cleaning wastes, blowdown, and backwash. It is anticipated that the treated water will be suitable for discharge into existing systems and be within EPA standards for suspended solids, oil and grease, pH, and miscellaneous metals.

The waste treatment system is minimal and consists, primarily, of neutralization and oil/water separators (along with the associated pumps, piping, etc.).

A natural gas supply line has been included in all cases for start-up or emergency fuel.

Miscellaneous systems consisting of natural gas, service air, instrument air, and service water are provided. All truck roadways and unloading stations inside the fence area are provided.

3.1.14 Instrumentation and Control

An integrated plant-wide DCS is provided. The DCS is a redundant microprocessor-based, functional DCS. The control room houses an array of multiple video monitors and keyboard units. The monitor/keyboard units are the primary interface between the generating process and operations personnel. The DCS incorporates plant monitoring and control functions for all the major plant equipment. The DCS is designed to be operational and accessible 99.5 percent of the time that it is required (99.5 percent availability). The plant equipment and the DCS are designed for automatic response to load changes from minimum load to 100 percent. Startup and shutdown routines are manually implemented, with operator selection of modular automation routines available. The exception to this, and an important facet of the control system for gasification, is the critical controller system, which is a part of the license package from the gasifier supplier and is a dedicated and distinct hardware segment of the DCS.

This critical controller system is used to control the gasification process. The partial oxidation of the fuel feed and O_2 feed streams to form a syngas product is a stoichiometric, temperature- and pressure-dependent reaction. The critical controller utilizes a redundant microprocessor executing calculations and dynamic controls at 100- to 200-millisecond intervals. The enhanced execution speeds as well as evolved predictive controls allow the critical controller to mitigate process upsets and maintain the reactor operation within a stable set of operating parameters.

3.1.15 Performance Summary Metrics

This section details the methodologies of several metrics reported in the performance summaries.

3.1.15.1 Cold Gas Efficiency

The cold gas efficiency is calculated by subtracting the heating value of any gas recycled to the gasifier from the heating value of the gas exiting the gasifier and dividing that difference by the thermal input to the gasifier. This calculation is represented by the equation:

$$CGE = \frac{(GO - RI)}{TI}$$

Where:

CGE – cold gas efficiency

GO – heating value of gas exiting the gasifier

RI – heating value of gas recycled to gasifier

TI – thermal input to the gasifier

The thermal input to the gasifier is calculated by taking the coal feed rate and multiplying by the heating value and converting the units to kW.

The components considered for the heating value of the gasifier exit gas and recycle gas are CO, H_2, CH_4, H_2S, NH_3, and COS. Their mole fraction is extracted from the model, multiplied by the molar flow of the stream, and then multiplied by their individual heating values.

3.1.15.2 Combustion Turbine Efficiency

The combustion turbine efficiency is calculated by taking the combustion turbine power produced and dividing it by the thermal input to the turbines. This calculation is represented by the equation:

$$CTE = \frac{CTP}{TI}$$

Where:

CTE – combustion turbine efficiency

CTP – combustion turbine power

TI – thermal input to the turbine

The thermal input is calculated by taking the mole fraction of the individual gases (CO, H_2, CH_4, H_2S, NH_3, and COS) multiplied by the molar flow rate of the total stream entering the combustion turbine and then multiplying each by their individual heating values.

3.1.15.3 Steam Turbine Efficiency

The steam turbine efficiency is calculated by taking the steam turbine power produced and dividing it by the difference between the thermal input and thermal output. This calculation is represented by the equation:

$$STE = \frac{STP}{(TI - TO)}$$

Where:

STE – steam turbine efficiency

STP – steam turbine power

TI – thermal input

TO – thermal output

Depending on the case, the thermal input is considered to include the main steam, makeup water, energy added during reheat, LP steam from the HRSG, and/or IP steam from the WGS.

The IP blowdown, HP blowdown, and superheater losses are also credited to the thermal input as they are extracted from the cycle prior to the main steam but after the condensate boiler FW.

The thermal output is considered to be the BFW from the condenser and any extractions, such as the gasifier steam and the 1.7 MPa (250 psia) header.

3.1.15.4 Steam Turbine Heat Rate

The steam turbine heat rate is calculated by taking the inverse of the steam turbine efficiency. This calculation is represented by the equation:

$$STHR = \frac{1}{STE} * 3{,}412$$

Where:

STHR – steam turbine heat rate, Btu/kWh

STE – steam turbine efficiency, fraction

3.2 SHELL GLOBAL SOLUTIONS IGCC CASES

This section contains an evaluation of plant designs for cases B1A and B1B, which are based on the Shell gasifier. Cases B1A and B1B are very similar in terms of process, equipment, scope and arrangement, except that Case B1B employs a syngas quench and includes WGS reactors, CO_2 absorption/regeneration, and compression/transport systems. There are no provisions for CO_2 removal in Case B1A.

The balance of this section is organized as follows:

- Gasifier Background – provides information on the development and status of the Shell gasification technology

- Process System Description – provides an overview of the technology operation as applied to Case B1A. The systems that are common to all gasifiers were covered in Section 3.1 and only features that are unique to Case B1A are discussed further in this section
- Key Assumptions – provides a summary of study and modeling assumptions relevant to cases B1A and B1B
- Sparing Philosophy – provided for cases B1A and B1B
- Performance Results – provides the main modeling results from Case B1A, including the performance summary, environmental performance, carbon balance, sulfur balance, water balance, mass and energy balance diagrams, and mass and energy balance tables
- Equipment List – provides an itemized list of major equipment for Case B1A
- Cost Estimates – provides a summary of capital and operating costs for Case B1A.

Process and System Description, Performance Results, and Equipment List and Cost Estimates are repeated for Case B1B.

3.2.1 Gasifier Background

The "Coal Gasification Guidebook: Status, Application, and Technologies" report published by EPRI provides a detailed history of the development of several types of gasifier technology, including the Shell gasifier, as well as gasifier capacity, distinguishing characteristics, and important coal characteristics. [95]

As of 2009, Shell reported ten gasifiers in operation, producing 100,000–150,000 Nm^3/hr of syngas and three of the same size in construction. Another three ranging from 150,000 to 250,000 Nm^3/hr are also in construction. [96] The large gasifier operating in the Netherlands has a bituminous coal-handling capacity of 1,633 tonnes/day (1,800 tpd) and produces dry gas at a rate of 158,575 Nm^3/hr (5.6 million scf/hr) with an energy content of about 1,792 GJ/hr (1,700 MMBtu/hr) (HHV). This gasifier was sized to match the fuel gas requirements for the Siemens/Kraftwerk Union V-94.2 CT and could easily be scaled up to match state-of-the-art 2008 F-class turbine requirements. [96]

Shell gasifiers are capable of utilizing a wide variety of coal types, and compared to slurry fed gasifiers, the dry-fed, cooled-refractory lined, Shell gasifier has a lower O_2 requirement and produces a gas with a higher H_2S/CO_2 ratio, which improves sulfur recovery. [95]

While the use of dry feed allows for lower O_2 consumption, the feed system—which includes the coal drying system—is more complicated. [95]

Coal characteristics that are favorable when selecting a coal type for use with a Shell gasifier include low concentrations of ash with a moderate fusion temperature. If a coal is selected that has a high ash fusion temperature, flux addition may be necessary. The negative impact that high ash coals have on the operation of gasifiers are reduced in dry feed systems in comparison to slurry fed gasifiers. [95]

3.2.2 Key System Assumptions

System assumptions for cases B1A and B1B (Shell IGCC with and without CO_2 capture) are compiled in Exhibit 3-21.

Exhibit 3-21. Shell IGCC plant study configuration matrix

Case	B1A	B1B
Gasifier Pressure, MPa (psia)	4.2 (615)	
O_2:Coal Ratio, kg O_2/kg As-Received coal	0.720	
Carbon Conversion, %	99.5	
Syngas HHV at Gasifier Outlet, kJ/Nm^3 (Btu/scf)[A]	10,805 (290)	9,948 (267)
Steam Cycle, MPa/°C/°C (psig/°F/°F)	12.4/561/561 (1,800/1,043/1,043)	12.4/533/533 (1,800/991/991)
Condenser Pressure, mm Hg (in. Hg)	51 (2.0)	
CT	2x State-of-the-art 2008 F-Class (232 MW output each)	
Gasifier Technology	Shell	
Oxidant	95 vol% O_2	
Coal	Illinois No. 6	
Coal Feed Moisture Content, %	5	
COS Hydrolysis	Yes	Occurs in WGS
WGS	No	Yes
H_2S Separation	Sulfinol-M	Selexol 1st Stage
Sulfur Removal, %	99.5	~100.0
Sulfur Recovery	Claus Plant with Tail Gas Treatment/Elemental Sulfur	
Particulate Control	Cyclone, Candle Filter, Scrubber, and AGR Absorber	Cyclone, Candle Filter, Scrubber, Quench, and AGR Absorber
Chloride Control	Venturi Scrubber, Vacuum Flash, Brine Concentrator, Crystallizer	
Mercury Control	Carbon Bed	
NOx Control	MNQC (LNB), N_2 Dilution, and Humidification	
CO_2 Separation	N/A	Selexol 2nd Stage
Overall Carbon Capture	N/A	90.0%
CO_2 Sequestration	N/A	Off-site Saline Formation

[A]Syngas measurement is reflected post-syngas recycle, but before syngas quench (if applicable). In B1B with CO_2 capture and WGS, syngas recycle is taken after WGS, resulting in an increased moisture content and lower syngas heating value

3.2.2.1 Balance of Plant – Case B1A and Case B1B

The balance of plant assumptions are common to both cases and presented in Exhibit 3-22.

Exhibit 3-22. Balance of plant assumptions

Parameters	Values
Cooling System	Recirculating Wet Cooling Tower
Fuel and Other Storage	
Coal	30 days
Slag	30 days
Sulfur	30 days
Sorbent	30 days
Plant Distribution Voltage	
Motors below 1 hp	110/220 V
Motors between 1 hp and 250 hp	480 V
Motors between 250 hp and 5,000 hp	4,160 V
Motors above 5,000 hp	13,800 V
Steam and Combustion Turbine Generators	24,000 V
Grid Interconnection Voltage	345 kV
Water and Wastewater	
Makeup Water	The water supply is 50 percent from a local POTW and 50 percent from groundwater and is assumed to be in sufficient quantities to meet plant makeup requirements Makeup for potable, process, and de-ionized (DI) water is drawn from municipal sources
Process Wastewater	Storm water that contacts equipment surfaces is collected and treated for discharge
Sanitary Waste Disposal	Design includes a packaged domestic sewage treatment plant with effluent discharged to the industrial wastewater treatment system. Sludge is hauled off site. Packaged plant was sized for 5.68 cubic meters per day (1,500 gallons per day)
Water Discharge	Blowdown from the cooling tower is softened and passed through a two-stage RO with pre-treatment and demineralizer before being discharged

3.2.3 Sparing Philosophy

The sparing philosophy for cases B1A and B1B is provided below. Dual trains are used to accommodate the size of commercial CTs. There is no redundancy other than normal sparing of rotating equipment. The plant design consists of the following major subsystems:

- Two ASUs (2 x 50 percent)
- Two trains of coal drying and dry feed systems (2 x 50 percent)
- Two trains of gasification, including gasifier, SGC, cyclone, and barrier filter (2 x 50 percent)
- Two trains of syngas clean-up process (2 x 50 percent)
- Two trains of Sulfinol-M AGR in Case B1A and two-stage Selexol in Case B1B (2 x 50 percent)
- Two trains of CO_2 compression systems (2 x 50 percent) in Case B1B
- Two trains of process water treatment systems (2 x 50 percent)
- One train of Claus-based sulfur recovery (1 x 100 percent)
- Two CT/HRSG tandems (2 x 50 percent)
- One steam turbine (1 x 100 percent)

3.2.4 Case B1A – Shell IGCC Power Plant Without CO_2 Capture Process Description

In this section, the Shell gasification process for Case B1A is described. The system descriptions follow the BFD provided in Exhibit 3-23 with the associated stream tables—providing process data for the numbered streams in the BFD—provided in Exhibit 3-24.

3.2.4.1 Coal Preparation and Feed Systems

Coal receiving and handling is common to all cases and was covered in Section 3.1.1. The receiving and handling subsystem ends at the coal silo. The Shell process uses a dry feed system, which is sensitive to the coal moisture content. Coal moisture consists of two parts, surface moisture and inherent moisture. For coal to flow smoothly through the lock hoppers, the surface moisture must be removed. The Illinois No. 6 coal used in this report contains 11.12 percent total moisture on an as-received basis (stream 8). It was assumed that the coal must be dried to 5 percent moisture to allow for smooth flow through the dry feed system.

The coal is simultaneously crushed and dried in the coal mill then delivered to a surge hopper with an approximate two-hour capacity. A slipstream of clean syngas (stream 10) is combusted with air (stream 9) in an incinerator, which produces a flue gas with an O_2 content of 6 vol%. The incinerator's flue gas is used to dry the coal in the mill.

The coal is drawn from the surge hoppers and fed through a pressurization lock hopper system to a dense phase pneumatic conveyor, which uses N_2 from the ASU (stream 5) to convey the coal to the gasifiers.

Exhibit 3-23. Case B1A block flow diagram, Shell IGCC without CO_2 capture

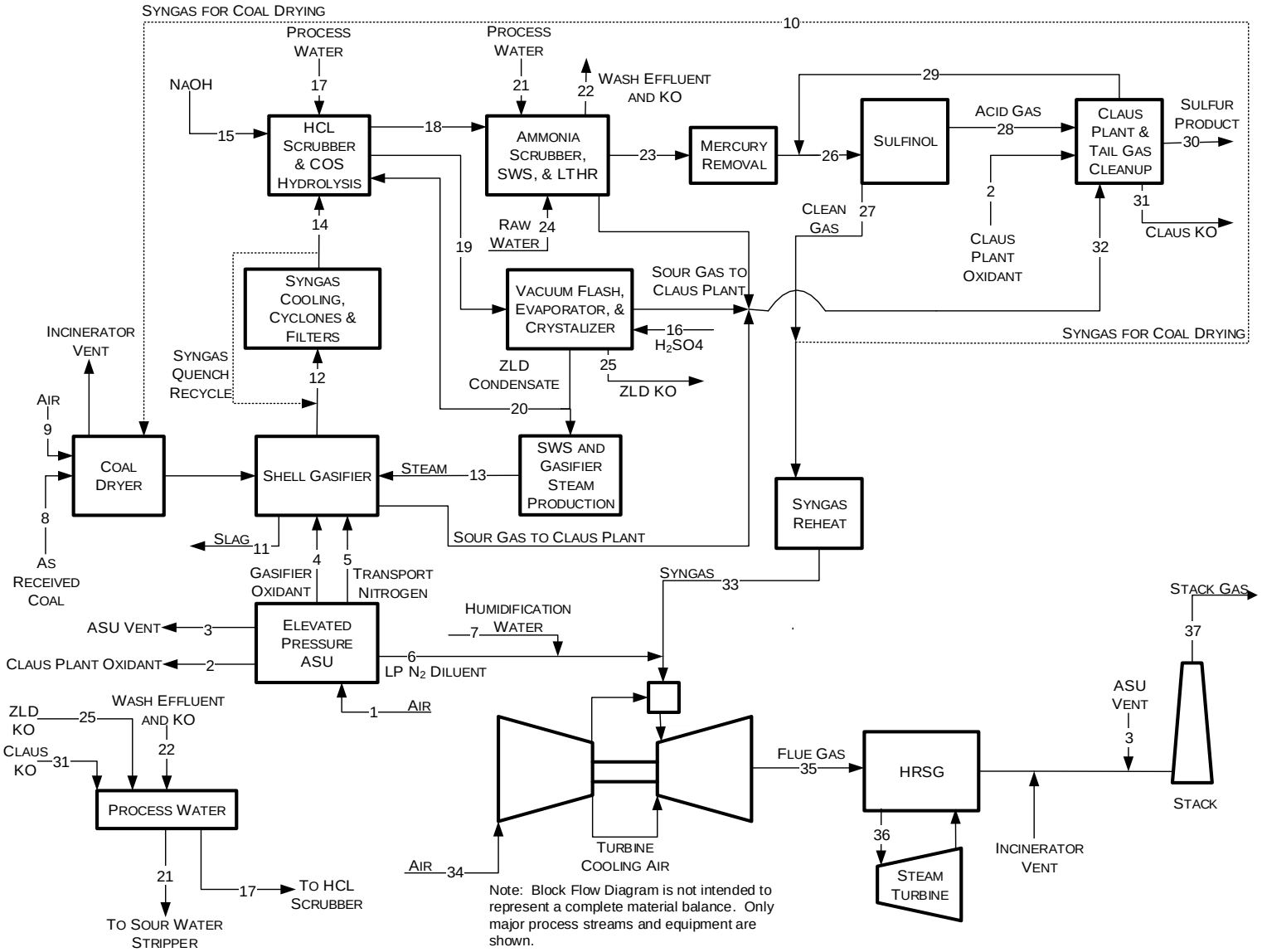

Exhibit 3-24. Case B1A stream table, Shell IGCC without capture

	1	2	3	4	5	6	7	8	9	10	11	12
V-L Mole Fraction												
Ar	0.0092	0.0343	0.2078	0.0343	0.0000	0.0000	0.0000	0.0000	0.0092	0.0097	0.0000	0.0091
CH_4	0.0000	0.0000	0.0000	0.0000	0.0000	0.0000	0.0000	0.0000	0.0000	0.0004	0.0000	0.0004
CO	0.0000	0.0000	0.0000	0.0000	0.0000	0.0000	0.0000	0.0000	0.0000	0.5970	0.0000	0.5753
CO_2	0.0003	0.0000	0.0365	0.0000	0.0000	0.0000	0.0000	0.0000	0.0003	0.0206	0.0000	0.0188
COS	0.0000	0.0000	0.0000	0.0000	0.0000	0.0000	0.0000	0.0000	0.0000	0.0000	0.0000	0.0007
H_2	0.0000	0.0000	0.0000	0.0000	0.0000	0.0000	0.0000	0.0000	0.0000	0.3093	0.0000	0.2937
H_2O	0.0099	0.0000	0.7535	0.0000	0.0000	0.0000	1.0000	0.0000	0.0099	0.0013	0.0000	0.0323
HCl	0.0000	0.0000	0.0000	0.0000	0.0000	0.0000	0.0000	0.0000	0.0000	0.0000	0.0000	0.0005
H_2S	0.0000	0.0000	0.0000	0.0000	0.0000	0.0000	0.0000	0.0000	0.0000	0.0000	0.0000	0.0081
N_2	0.7732	0.0157	0.0023	0.0157	0.9964	0.9964	0.0000	0.0000	0.7732	0.0616	0.0000	0.0575
NH_3	0.0000	0.0000	0.0000	0.0000	0.0000	0.0000	0.0000	0.0000	0.0000	0.0000	0.0000	0.0035
O_2	0.2074	0.9501	0.0000	0.9501	0.0036	0.0036	0.0000	0.0000	0.2074	0.0000	0.0000	0.0000
SO_2	0.0000	0.0000	0.0000	0.0000	0.0000	0.0000	0.0000	0.0000	0.0000	0.0000	0.0000	0.0000
NaCl	0.0000	0.0000	0.0000	0.0000	0.0000	0.0000	0.0000	0.0000	0.0000	0.0000	0.0000	0.0000
NaOH	0.0000	0.0000	0.0000	0.0000	0.0000	0.0000	0.0000	0.0000	0.0000	0.0000	0.0000	0.0000
Total	1.0000	1.0000	1.0000	1.0000	1.0000	1.0000	1.0000	0.0000	1.0000	1.0000	0.0000	1.0000
V-L Flowrate (kg_{mol}/hr)	22,143	94	198	4,675	880	16,225	96	0	835	253	0	25,032
V-L Flowrate (kg/hr)	638,970	3,042	4,670	150,577	24,677	454,760	1,723	0	24,107	5,159	0	513,012
Solids Flowrate (kg/hr)	0	0	0	0	0	0	0	197,502	0	0	19,781	0
Temperature (°C)	15	27	29	27	129	196	38	15	15	45	1,427	1,080
Pressure (MPa, abs)	0.10	0.86	0.45	5.10	5.41	2.80	0.90	0.10	0.10	3.36	4.24	4.24
Steam Table Enthalpy (kJ/kg)[A]	30.23	21.53	18.93	9.82	127.56	202.54	161.90	---	30.23	60.36	---	1,759.42
AspenPlus Enthalpy (kJ/kg)[B]	-97.58	-0.97	-9,805.48	-12.68	101.59	176.57	-15,818.39	-2,119.02	-97.58	-3,627.19	2,165.43	-2,216.09
Density (kg/m^3)	1.2	11.2	16.9	68.6	44.9	19.9	993.1	---	1.2	25.8	---	7.7
V-L Molecular Weight	28.857	32.209	23.543	32.209	28.028	28.028	18.015	---	28.857	20.398	---	20.494
V-L Flowrate (lb_{mol}/hr)	48,816	208	437	10,307	1,941	35,771	211	0	1,842	558	0	55,186
V-L Flowrate (lb/hr)	1,408,688	6,707	10,296	331,965	54,403	1,002,573	3,799	0	53,146	11,373	0	1,130,999
Solids Flowrate (lb/hr)	0	0	0	0	0	0	0	435,418	0	0	43,609	0
Temperature (°F)	59	80	83	80	263	385	101	59	59	112	2,600	1,977
Pressure (psia)	14.7	125.0	65.0	740.0	785.0	406.1	130.0	14.7	14.7	487.4	615.0	615.0
Steam Table Enthalpy (Btu/lb)[A]	13.0	9.3	8.1	4.2	54.8	87.1	69.6	---	13.0	26.0	---	756.4
AspenPlus Enthalpy (Btu/lb)[B]	-42.0	-0.4	-4,215.6	-5.5	43.7	75.9	-6,800.7	-911.0	-42.0	-1,559.4	931.0	-952.7
Density (lb/ft^3)	0.076	0.700	1.053	4.283	2.802	1.245	61.999	---	0.076	1.612	---	0.478

[A]Steam table reference conditions are 32.02°F & 0.089 psia

[B]Aspen thermodynamic reference state is the component's constituent elements in an ideal gas state at 25°C and 1 atm

Exhibit 3-24. Case B1A stream table, Shell IGCC without capture (continued)

	13	14	15	16	17	18	19	20	21	22	23	24
V-L Mole Fraction												
Ar	0.0000	0.0091	0.0000	0.0000	0.0000	0.0090	0.0000	0.0000	0.0000	0.0000	0.0095	0.0000
CH_4	0.0000	0.0004	0.0000	0.0000	0.0000	0.0004	0.0000	0.0000	0.0000	0.0000	0.0004	0.0000
CO	0.0000	0.5753	0.0000	0.0000	0.0000	0.5635	0.0002	0.0000	0.0000	0.0000	0.5958	0.0000
CO_2	0.0000	0.0188	0.0000	0.0000	0.0002	0.0191	0.0001	0.0000	0.0002	0.0002	0.0201	0.0000
COS	0.0000	0.0007	0.0000	0.0000	0.0000	0.0000	0.0000	0.0000	0.0000	0.0000	0.0000	0.0000
H_2	0.0000	0.2937	0.0000	0.0000	0.0000	0.2877	0.0001	0.0000	0.0000	0.0000	0.3042	0.0000
H_2O	0.9998	0.0323	0.6895	0.1000	0.9779	0.0508	0.9904	0.9969	0.9779	0.9784	0.0014	0.9999
HCl	0.0000	0.0005	0.0000	0.0000	0.0000	0.0000	0.0000	0.0000	0.0000	0.0000	0.0000	0.0000
H_2S	0.0000	0.0081	0.0000	0.0000	0.0004	0.0086	0.0001	0.0000	0.0004	0.0004	0.0090	0.0000
N_2	0.0000	0.0575	0.0000	0.0000	0.0000	0.0563	0.0000	0.0000	0.0000	0.0000	0.0596	0.0000
NH_3	0.0002	0.0035	0.0000	0.0000	0.0215	0.0046	0.0063	0.0031	0.0215	0.0208	0.0000	0.0000
O_2	0.0000	0.0000	0.0000	0.0000	0.0000	0.0000	0.0000	0.0000	0.0000	0.0000	0.0000	0.0000
SO_2	0.0000	0.0000	0.0000	0.0000	0.0000	0.0000	0.0000	0.0000	0.0000	0.0000	0.0000	0.0000
NaCl	0.0000	0.0000	0.0000	0.0000	0.0000	0.0000	0.0026	0.0000	0.0000	0.0000	0.0000	0.0001
NaOH	0.0000	0.0000	0.3105	0.0000	0.0000	0.0000	0.0001	0.0000	0.0000	0.0000	0.0000	0.0000
Total	1.0000	1.0000	1.0000	0.1000	1.0000	1.0000	1.0000	1.0000	1.0000	1.0000	1.0000	1.0000
V-L Flowrate (kg_{mol}/hr)	1,051	17,522	27	0	1,651	17,889	3,248	1,936	2,723	3,964	16,916	340
V-L Flowrate (kg/hr)	18,936	359,109	681	12	29,736	365,547	58,857	34,878	49,041	71,384	348,025	6,122
Solids Flowrate (kg/hr)	0	0	0	0	0	0	0	0	0	0	0	0
Temperature (°C)	343	191	16	15	37	131	118	87	37	38	28	15
Pressure (MPa, abs)	5.10	3.93	4.76	0.13	0.47	3.70	3.83	0.13	0.47	0.45	3.51	0.10
Steam Table Enthalpy (kJ/kg)[A]	3,083.36	343.38	-338.83	-8,206.86	112.14	295.72	478.58	358.65	112.14	116.61	36.40	62.75
AspenPlus Enthalpy (kJ/kg)[B]	-12,884.30	-3,632.14	-13,665.04	-8,526.27	-15,573.36	-3,889.34	-15,327.49	-15,573.09	-15,573.36	-15,575.60	-3,613.73	-15,905.25
Density (kg/m^3)	19.9	20.6	1,531.7	1,791.5	979.4	22.4	934.8	964.3	979.4	979.4	28.8	999.4
V-L Molecular Weight	18.015	20.494	24.842	90.073	18.007	20.434	18.120	18.012	18.007	18.009	20.574	18.019
V-L Flowrate (lb_{mol}/hr)	2,317	38,630	60	0	3,641	39,439	7,161	4,269	6,004	8,739	37,293	749
V-L Flowrate (lb/hr)	41,746	791,699	1,502	27	65,558	805,893	129,758	76,892	108,117	157,376	767,263	13,497
Solids Flowrate (lb/hr)	0	0	0	0	0	0	0	0	0	0	0	0
Temperature (°F)	650	375	61	59	99	267	244	189	99	100	83	59
Pressure (psia)	740.0	570.2	690.2	18.2	67.7	537.1	555.3	19.3	67.7	65.0	509.1	14.7
Steam Table Enthalpy (Btu/lb)[A]	1,325.6	147.6	-145.7	-3,528.3	48.2	127.1	205.8	154.2	48.2	50.1	15.7	27.0
AspenPlus Enthalpy (Btu/lb)[B]	-5,539.3	-1,561.5	-5,874.9	-3,665.6	-6,695.3	-1,672.1	-6,589.6	-6,695.2	-6,695.3	-6,696.3	-1,553.6	-6,838.0
Density (lb/ft^3)	1.240	1.289	95.621	111.841	61.141	1.397	58.358	60.198	61.141	61.140	1.799	62.391

[A]Steam table reference conditions are 32.02°F & 0.089 psia

[B]Aspen thermodynamic reference state is the component's constituent elements in an ideal gas state at 25°C and 1 atm

Exhibit 3-24. Case B1A stream table, Shell IGCC without capture (continued)

	25	26	27	28	29	30	31	32	33	34	35	36	37
V-L Mole Fraction													
Ar	0.0000	0.0094	0.0097	0.0004	0.0083	0.0000	0.0000	0.0005	0.0097	0.0092	0.0087	0.0000	0.0090
CH_4	0.0000	0.0004	0.0004	0.0000	0.0000	0.0000	0.0000	0.0000	0.0004	0.0000	0.0000	0.0000	0.0000
CO	0.0000	0.5817	0.5970	0.0147	0.0048	0.0000	0.0000	0.0238	0.5970	0.0000	0.0000	0.0000	0.0000
CO_2	0.0002	0.0334	0.0206	0.5110	0.5805	0.0000	0.0000	0.0157	0.0206	0.0003	0.0760	0.0000	0.0761
COS	0.0000	0.0000	0.0000	0.0000	0.0000	0.0000	0.0000	0.0000	0.0000	0.0000	0.0000	0.0000	0.0000
H_2	0.0000	0.3015	0.3093	0.0083	0.1888	0.0000	0.0000	0.0132	0.3093	0.0000	0.0000	0.0000	0.0000
H_2O	0.9480	0.0014	0.0013	0.0053	0.0022	0.0000	1.0000	0.1815	0.0013	0.0099	0.0469	1.0000	0.0531
HCl	0.0000	0.0000	0.0000	0.0000	0.0000	0.0000	0.0000	0.0000	0.0000	0.0000	0.0000	0.0000	0.0000
H_2S	0.0007	0.0089	0.0000	0.3393	0.0043	0.0000	0.0000	0.0188	0.0000	0.0000	0.0000	0.0000	0.0000
N_2	0.0000	0.0632	0.0616	0.1207	0.2110	0.0000	0.0000	0.0017	0.0616	0.7732	0.7551	0.0000	0.7495
NH_3	0.0510	0.0000	0.0000	0.0004	0.0000	0.0000	0.0000	0.7447	0.0000	0.0000	0.0000	0.0000	0.0000
O_2	0.0000	0.0000	0.0000	0.0000	0.0000	0.0000	0.0000	0.0000	0.0000	0.2074	0.1133	0.0000	0.1122
SO_2	0.0000	0.0000	0.0000	0.0000	0.0000	0.0000	0.0000	0.0000	0.0000	0.0000	0.0000	0.0000	0.0000
NaCl	0.0000	0.0000	0.0000	0.0000	0.0000	0.0000	0.0000	0.0000	0.0000	0.0000	0.0000	0.0000	0.0000
NaOH	0.0000	0.0000	0.0000	0.0000	0.0000	0.0000	0.0000	0.0000	0.0000	0.0000	0.0000	0.0000	0.0000
Total	1.0000	1.0000	1.0000	1.0000	1.0000	0.0000	1.0000	1.0000	1.0000	1.0000	1.0000	1.0000	1.0000
V-L Flowrate (kg_{mol}/hr)	222	17,328	16,875	454	413	0	189	82	16,622	110,253	135,663	39,458	137,546
V-L Flowrate (kg/hr)	3,990	361,439	344,215	17,224	13,414	0	3,410	1,486	339,056	3,181,556	3,977,095	710,850	4,023,832
Solids Flowrate (kg/hr)	0	0	0	0	0	4,928	0	0	0	0	0	0	0
Temperature (°C)	30	37	45	45	38	184	51	204	193	15	592	561	122
Pressure (MPa, abs)	0.24	3.39	3.36	3.36	3.39	0.29	0.27	0.45	3.23	0.10	0.10	12.51	0.10
Steam Table Enthalpy (kJ/kg)[A]	24.88	47.09	60.36	15.47	21.37	---	116.08	863.94	280.22	30.23	712.14	3,504.64	207.25
AspenPlus Enthalpy (kJ/kg)[B]	-15,280.98	-3,730.87	-3,627.19	-5,569.13	-7,073.03	147.58	-15,853.53	-4,472.51	-3,407.34	-97.58	-792.26	-12,475.66	-1,363.60
Density (kg/m^3)	964.2	27.4	25.8	56.4	45.7	5,266.4	968.4	2.1	16.8	1.2	0.4	35.1	0.9
V-L Molecular Weight	17.984	20.858	20.398	37.978	32.496	---	18.016	18.048	20.398	28.857	29.316	18.015	29.255
V-L Flowrate (lb_{mol}/hr)	489	38,203	37,203	1,000	910	0	417	181	36,645	243,065	299,086	86,990	303,236
V-L Flowrate (lb/hr)	8,797	796,836	758,864	37,972	29,573	0	7,517	3,275	747,491	7,014,130	8,767,994	1,567,156	8,871,030
Solids Flowrate (lb/hr)	0	0	0	0	0	10,863	0	0	0	0	0	0	0
Temperature (°F)	86	98	112	112	100	364	124	400	380	59	1,098	1,043	252
Pressure (psia)	35.0	492.0	487.4	487.4	492.0	41.7	39.5	65.0	468.1	14.7	15.1	1,814.7	14.8
Steam Table Enthalpy (Btu/lb)[A]	10.7	20.2	26.0	6.7	9.2	---	49.9	371.4	120.5	13.0	306.2	1,506.7	89.1
AspenPlus Enthalpy (Btu/lb)[B]	-6,569.6	-1,604.0	-1,559.4	-2,394.3	-3,040.9	63.4	-6,815.8	-1,922.8	-1,464.9	-42.0	-340.6	-5,363.6	-586.2
Density (lb/ft^3)	60.191	1.712	1.612	3.520	2.856	328.773	60.453	0.129	1.047	0.076	0.026	2.190	0.057

[A]Steam table reference conditions are 32.02°F & 0.089 psia

[B]Aspen thermodynamic reference state is the component's constituent elements in an ideal gas state at 25°C and 1 atm

3.2.4.2 Gasifier

There are two Shell dry feed, pressurized, upflow, entrained, slagging gasifiers, operating at 4.2 MPa (615 psia) and processing a total of 4,740 tonnes/day (5,225 tpd) of as-received coal. The air separation plant supplies 3,614 tonnes/day (3,984 tpd) of 95 percent O_2 to the gasifiers (stream 4). Coal reacts with O_2 and steam at a temperature of 1,427°C (2,600°F) in the gasifier to produce principally H_2 and CO with little CO_2 formed.

The gasifier's refractory-lined water wall is protected by molten slag that solidifies on the cooled walls.

3.2.4.3 Raw Gas Cooling and Particulate Removal

High-temperature heat recovery in each gasifier train is accomplished in three steps, including the gasifier jacket, which cools and solidifies slag touching the gasifier walls and maintains the syngas temperature at 1,427°C (2,600°F). The product gas from the gasifier is cooled below 1,093°C (2,000°F) by adding cooled recycled syngas to lower the temperature below the ash melting point. The mixed gas (stream 12) then goes through a duct cooler, which lowers the gas temperature to 899°C (1,650°F), and a subsequent syngas cooler, which further lowers the gas temperature to 375°C (675°F). Both the duct cooler and syngas cooler produce HP steam at 12.8 MPa (1,852 psia) for use in the steam cycle.

The majority of the fine particulates in the cooled gas from the syngas cooler are removed by passing through a cyclone collector, followed by an array of raw gas metallic candle filter elements in a pressure vessel (recycled syngas is used as the pulse gas to clean the candle filters). A carbon conversion of 99.5 percent is achieved by recycling the recovered fines, which are returned to the gasifier with the coal fuel.

The ash that is not carried out with the gas forms slag and runs down the interior walls, exiting the gasifier in liquid form. The slag is solidified in a quench tank for disposal (stream 11). Lockhoppers are used to reduce the pressure of the solids from 4.2 to 0.1 MPa (615 to 15 psia). The syngas scrubber removes additional PM further downstream (covered in Section 3.2.4.5).

The syngas from the candle filter is further cooled to 191°C (375°F) by producing IP steam at 5.1 MPa (740 psia) for use in the gasifier (stream 13), preheating the N_2 diluent (stream 6) prior to the CT, and producing LP steam at 0.4 MPa (65 psia).

3.2.4.4 Quench Gas Compressor

Thirty percent of the cooled syngas is recycled back to the gasifier exit as quench gas. A single-stage compressor is utilized to boost the pressure of the cooled syngas stream to 4.3 MPa (625 psia).

3.2.4.5 Syngas Scrubber

The ejector-type venturi scrubber is common to all cases and was covered in Section 3.1.12.1.1. The raw syngas exiting the final raw gas cooler at 191°C (375°F) (stream 14) enters the scrubber for removal of HCl and remaining PM. The treated syngas leaves the scrubber saturated at a

temperature of 117°C (242°F). Process water (stream 17) is mixed with ZLD condensate (stream 20) before being cooled to 58°C (137°F) by preheating syngas prior to the CT and subsequently cooled further to 21°C (70°F) with cooling water. The cooled water is then used to remove 99.9 percent of entering HCl, along with essentially all traces of entrained particles (principally unconverted carbon, slag, and metals). The rate of process water injection into the scrubber is controlled to maintain a concentration of chloride in the blowdown (stream 19) of 5,000 ppmw. Due to the dry nature of the syngas in this case (3 vol%), no effluent recycle is required to achieve the desired chloride concentration in the blowdown.

A 50 wt% solution of NaOH (stream 15) is added at a rate of 1,502 lb/hr to the scrubber to maintain pH and form the HSS NaCl.

The blowdown from the syngas scrubber is sent to the process water treatment system for chloride removal and recycle.

3.2.4.6 COS Hydrolysis

The COS hydrolysis unit is common to all non-CO_2 capture cases and was covered in Section 3.1.5.1. Following the syngas scrubber, the gas is reheated to 130°C (266°F) and fed to the COS hydrolysis reactor where 95 percent of the COS is hydrolyzed with steam over a catalyst bed to H_2S and CO_2. Before the raw syngas can be treated in the AGR process, it must be cooled and treated for NH_3.

3.2.4.7 Low Temperature Heat Recovery

The raw syngas from the COS unit is cooled through a series of two shell and tube HXs (covered in Section 3.1.12.1.2). The first stage cools the syngas from 131°C (268°F) to 59°C (138°F) by preheating FW to the HRSG and the second stage cools the syngas to 29°C (85°F) with cooling water. During cooling, part of the water vapor condenses, along with significant amounts of NH_3, and is combined with the effluent of the NH_3 wash.

3.2.4.8 Sour Water Stripper and Ammonia Wash

The primary SWS removes NH_3, H_2S, and other dissolved gases from the remaining water from the process water drum (stream 19), as was covered in Section 3.1.12.1.3. Process water flows from the drum to the SWS, which consists of a packed column with a steam-heated reboiler. Sour gas is stripped from the liquid and sent to the SRU. The remaining water is combined with raw water makeup (stream 24) and cooled to 21°C (70°F) with cooling water prior to being used as feed to the NH_3 wash.

The cooled syngas from the LTHR is sent to the NH_3 wash (covered in Section 3.1.12.1.4) where it flows upward against a counter-current spray of water from the SWS. The rate of raw water makeup addition to the NH_3 wash is controlled to achieve a concentration of NH_3 in the treated gas (stream 23) of 10 ppm. The effluent from the NH_3 wash contains high concentrations of NH_3 and is combined with the effluent from the LTHR system before being flashed and sent to the process water drum (stream 22). The vapor product of the flash is sent to the SRU.

A secondary SWS is included in this case to reduce the concentration of NH_3 in the condensate from the brine concentrator and crystallizer to 200 ppmw prior to being fed into a steam generator for production of steam injected into the gasifier (stream 13).

3.2.4.9 Process Water Treatment

The process water treatment system—which consists of a vacuum flash, brine concentrator, and crystallizer—is common to all cases and was covered in Section 3.1.12.2. The blowdown (stream 19) from the syngas scrubber is first flashed to 0.5 MPa (70 psia) with the effluent subsequently vacuum flashed to 0.05 MPa (7.5 psia). The vapor products from both the LP and vacuum flash stages are first cooled to 72°C (162°F), by preheating syngas prior to the CT, before being cooled further to 29°C (85°F) using cooling water. The cooled streams are sent to an overhead flash to 0.2 MPa (35 psia) with the sour gas compressed to 0.4 MPa (65 psia) and sent to the SRU for incineration. The effluent from the overhead flash and condensate from the sour gas compressor are collected and sent to the process water drum for distribution (stream 25).

The effluent from the vacuum flash is sent to the brine concentrator, which evaporates sufficient water to produce an effluent containing approximately 250,000 TDS. The vapor product from the brine concentrator is compressed to 0.14 MPa (20.5 psia) and cooled to provide heat to the brine concentrator for evaporation. The vapor product is condensed in a heat exchanger, which provides preheat to the brine concentrator feed.

The effluent from the brine concentrator then enters the steam-driven crystallizer, where 2,776 kg/hr (6,120 lb/hr) of 0.45 MPa (65 psia) steam is utilized to evaporate sufficient water to produce a super-saturated solution in the effluent. A portion of the effluent is extracted and sent to a centrifuge to separate solids. The centrifuge effluent is returned to the crystallizer.

The vapor product from the brine concentrator is condensed with cooling water and combined with the condensate from the brine concentrator before being recycled to the syngas scrubber (stream 20) or further treated in the secondary SWS (covered in Section 3.1.12.1.3 and 3.2.4.8).

3.2.4.10 Mercury Removal and AGR

The cooled syngas (stream 23) passes through a series of two carbon beds to remove approximately 97 percent of the Hg (covered in Section 3.1.4).

The Sulfinol process, developed by Shell in the early 1960s, is a combination process that uses a mixture of amines and a physical solvent. The solvent consists of an aqueous amine and sulfolane. Sulfinol-D uses diisopropanolamine (DIPA), while Sulfinol-M uses MDEA. The mixed solvents allow for better solvent loadings at high acid gas partial pressures and higher solubility of COS and organic sulfur compounds than pure aqueous amines. Sulfinol-M was selected for this application.

The sour syngas (stream 26) is fed directly into an HP contactor. The HP contactor is an absorption column in which the H_2S, COS, CO_2, and small amounts of H_2 and CO are removed from the gas by the Sulfinol-M solvent. The overhead gas stream from the HP contactor is then washed with water in the sweet gas scrubber before leaving the unit as the feed gas to the sulfur polishing unit.

The rich solvent from the bottom of the HP contactor flows through a hydraulic turbine and is flashed in the rich solvent flash vessel. The flashed gas is then scrubbed in the LP contactor with lean solvent to remove H_2S and COS. The overhead from the LP contactor is flashed in the LP KO drum. This gas can be used as a utility fuel gas, consisting primarily of H_2 and CO, at 0.8 MPa (118 psia) and 38°C (101°F). The solvent from the bottom of the LP contactor is returned to the rich solvent flash vessel.

Hot, lean solvent in the lean/rich solvent exchanger then heats the flashed rich solvent before entering the stripper. The stripper strips the H_2S, COS, and CO_2 from the solvent at LP with heat supplied through the stripper reboiler. The acid gas stream (stream 28) to sulfur recovery/tail gas cleanup is recovered as the flash gas from the stripper accumulator. The lean solvent from the bottom of the stripper is cooled in the lean/rich solvent exchanger and the lean solvent cooler. Most of the lean solvent is pumped to the HP contactor. A small amount goes to the LP contactor.

The Sulfinol-M process removes 60 percent of the CO_2 along with the H_2S and COS. The acid gas fed to the SRU contains 34 vol% H_2S and 51 vol% CO_2. The CO_2 passes through the SRU, the TGTU and is recycled to the AGR (stream 29), ultimately exiting the AGR with the clean syngas (stream 27).

3.2.4.11 Claus Unit

Acid gas (stream 28) from the Sulfinol-M unit is preheated to 219°C (427°F). A portion of the acid gas, along with all the sour gas (stream 32) and some O_2 from the ASU (stream 2), is fed to the SRU (a Claus bypass type). In the furnace, molten sulfur is produced by catalytically oxidizing approximately one third of the H_2S in the feed to SO_2 at a furnace temperature of 1,316°C (2,400°F), which must be maintained in order to thermally decompose all the NH_3 present in the sour gas stream. The remaining H_2S is then reacted with SO_2 to produce sulfur and water. Following the thermal stage and condensation of sulfur, three reheaters and three sulfur converters are used to obtain a per-pass H_2S conversion of 99.4 percent. The Claus plant tail gas is hydrogenated and recycled back to the AGR (stream 29).

The total elemental sulfur production from the SRU (stream 30) is approximately 118 tonnes/day (130 tpd).

The waste heat from the Claus unit is used to satisfy all Claus process preheating and reheating requirements, as well as to provide some medium-pressure (1.7 MPa [250 psia]) steam to the ASU.

3.2.4.12 Incinerator

A slipstream of clean syngas (stream 10) from the AGR is passed through an incinerator and combusted with air. The hot, nearly inert incinerator off gas is used to dry coal (covered in Section 3.2.4.1) before being vented to the atmosphere.

3.2.4.13 Power Block

The remaining clean syngas exiting the Sulfinol-M absorber (stream 27) that is not used for coal drying is reheated (stream 33) to 193°C (380°F) and diluted with LP N_2 from the ASU (stream 6). The diluted syngas enters the state-of-the-art 2008 F-class CT burner. The CT compressor provides combustion air (stream 34) to the burner. The exhaust gas exits the CT at 592°C (1,098°F) (stream 35) and enters the HRSG where additional heat is recovered until the flue gas exits the HRSG at 132°C (270°F) and is discharged through the plant stack. The steam raised in the HRSG is used to power an advanced, commercially available steam turbine using a 12.4 MPa/561°C/561°C (1,800 psig/1,043°F/1,043°F) steam cycle.

3.2.4.14 Air Separation Unit

The ASU is designed to produce a nominal output of 3,614 tonnes/day (3,984 tpd) of 95 mol% O_2 for use in the gasifier (stream 4) and SRU (stream 2). The plant is designed with two production trains. The air compressor is powered by an electric motor. Approximately 11,508 tonnes/day (12,686 tpd) of N_2 is also recovered, compressed, and used as dilution in the CT combustor and coal transportation.

3.2.5 Case B1A – Performance Results

The plant produces a net output of 640 MW at a net plant efficiency of 43.0 percent (HHV basis). Shell has reported expected efficiencies using bituminous coal of around 44–45 percent (HHV basis), although this value excluded the net power impact of coal drying. [97] Accounting for coal drying would reduce the efficiency by about 0.5–1 percentage points, which results in a reasonable match between the reported and modeled values.

Overall performance for the entire plant is summarized in Exhibit 3-25. Exhibit 3-26 provides a detailed breakdown of the auxiliary power requirements. The ASU accounts for approximately 80 percent of the total auxiliary load distributed between the MAC, booster compressor, N_2 compressor, O_2 pump, and ASU auxiliaries. The cooling water system, including the circulating water pumps and cooling tower fan, accounts for approximately 5 percent of the auxiliary load, and the BFW pumps account for an additional 3 percent. All other systems together constitute the remaining 12 percent of the auxiliary load.

Exhibit 3-25. Case B1A plant performance summary

Performance Summary	
Combustion Turbine Power, MWe	464
Sweet Gas Expander Power, MWe	0
Steam Turbine Power, MWe	301
Total Gross Power, MWe	**765**
Air Separation Unit Main Air Compressor, kWe	61,360
Air Separation Unit Booster Compressor, kWe	4,830
N_2 Compressors, kWe	32,500

Performance Summary	
CO_2 Compression, kWe	0
Acid Gas Removal, kWe	680
Balance of Plant, kWe	26,110
Total Auxiliaries, MWe	**125**
Net Power, MWe	**640**
HHV Net Plant Efficiency, %	43.0%
HHV Net Plant Heat Rate, kJ/kWh (Btu/kWh)	8,377 (7,940)
HHV Cold Gas Efficiency, %	82.9%
HHV Combustion Turbine Efficiency, %	39.0%
LHV Net Plant Efficiency, %	44.6%
LHV Net Plant Heat Rate, kJ/kWh (Btu/kWh)	8,080 (7,659)
LHV Cold Gas Efficiency, %	81.3%
LHV Combustion Turbine Efficiency, %	41.2%
Steam Turbine Cycle Efficiency, %	46.7%
Steam Turbine Heat Rate, kJ/kWh (Btu/kWh)	7,702 (7,300)
Condenser Duty, GJ/hr (MMBtu/hr)	1,532 (1,452)
AGR Cooling Duty, GJ/hr (MMBtu/hr)	96 (91)
As-Received Coal Feed, kg/hr (lb/hr)	197,502 (435,418)
HHV Thermal Input, kWt	1,488,680
LHV Thermal Input, kWt	1,435,850
Raw Water Withdrawal, $(m^3/min)/MW_{net}$ (gpm/MW_{net})	0.024 (6.5)
Raw Water Consumption, $(m^3/min)/MW_{net}$ (gpm/MW_{net})	0.019 (5.0)
O_2:As-Received Coal	0.720

Exhibit 3-26. Case B1A plant power summary

Power Summary	
Combustion Turbine Power, MWe	464
Sweet Gas Expander Power, MWe	0
Steam Turbine Power, MWe	301
Total Gross Power, MWe	**765**
Auxiliary Load Summary	
Acid Gas Removal, kWe	680
Air Separation Unit Auxiliaries, kWe	1,000
Air Separation Unit Main Air Compressor, kWe	61,360

Power Summary	
Air Separation Unit Booster Compressor, kWe	4,830
Ammonia Wash Pumps, kWe	70
Circulating Water Pumps, kWe	3,980
Claus Plant TG Recycle Compressor, kWe	1,030
Claus Plant/TGTU Auxiliaries, kWe	250
CO_2 Compression, kWe	0
Coal Dryer Air Compressor, kWe	60
Coal Handling, kWe	440
Coal Milling, kWe	2,030
Combustion Turbine Auxiliaries, kWe	1,000
Condensate Pumps, kWe	230
Cooling Tower Fans, kWe	2,060
Feedwater Pumps, kWe	4,260
Gasifier Water Pump, kWe	40
Ground Water Pumps, kWe	370
Miscellaneous Balance of Plant[A], kWe	3,000
N_2 Compressors, kWe	32,500
N_2 Humidification Pump, kWe	0
O_2 Pump, kWe	310
Quench Water Pump, kWe	0
Shift Steam Pump, kWe	0
Slag Handling, kWe	510
Slag Reclaim Water Recycle Pump, kWe	0
Slurry Water Pump, kWe	0
Auxiliary Load Summary	
Sour Gas Compressors, kWe	120
Sour Water Recycle Pumps, kWe	0
Steam Turbine Auxiliaries, kWe	200
Syngas Recycle Compressor, kWe	950
Syngas Scrubber Pumps, kWe	120
Process Water Treatment Auxiliaries, kWe	1,350
Transformer Losses, kWe	2,730
Total Auxiliaries, MWe	**125**
Net Power, MWe	**640**

[A]Includes plant control systems, lighting, HVAC, and miscellaneous low voltage loads

3.2.5.1 Environmental Performance

The environmental targets for emissions of Hg, HCl, NOx, SO_2, and PM were presented in Section 2.3. A summary of the plant air emissions for Case B1A is presented in Exhibit 3-27.

Exhibit 3-27. Case B1A air emissions

	kg/GJ (lb/MMBtu)	Tonne/year (ton/year)[A]	kg/MWh (lb/MWh)[B]
SO_2	0.008 (0.020)	317 (349)	0.059 (0.130)
NOx	0.025 (0.059)	949 (1,046)	0.177 (0.390)
Particulate	0.003 (0.007)	115 (126)	0.021 (0.047)
Hg	1.94E-7 (4.52E-7)	0.007 (0.008)	1.36E-6 (3.00E-6)
HCl	0.000 (0.000)	0.00 (0.00)	0.000 (0.000)
CO_2	86 (200)	3,230,068 (3,560,540)	602 (1,328)
CO_2[C]	-	-	720 (1,588)

[A]Calculations based on an 80 percent capacity factor
[B]Emissions based on gross power except where otherwise noted
[C]CO_2 emissions based on net power instead of gross power

The low level of SO_2 emissions is achieved by capturing the sulfur in the gas by the Sulfinol-M AGR process. The AGR process removes over 99 percent of the sulfur compounds in the fuel gas down to a level of less than 6 ppmv. This results in a concentration in the HRSG flue gas of less than 2 ppmv. The H_2S-rich regeneration gas from the AGR system is fed to a Claus plant, producing elemental sulfur. The Claus plant tail gas is compressed and recycled back to the AGR to capture most of the remaining sulfur. The SO_2 emissions in Exhibit 3-27 include both the stack emissions and the coal dryer emissions.

NOx emissions are limited by the use of N_2 dilution to 15 ppmvd (as NO at 15 percent O_2). NH_3 in the syngas is removed with process condensate prior to the low-temperature AGR process and destroyed in the Claus plant burner. This helps lower NOx levels as well.

Particulate discharge to the atmosphere is limited to extremely low values by the use of a cyclone and a barrier filter in addition to the syngas scrubber and the gas washing effect of the AGR absorber. The particulate emissions represent filterable particulate only.

Approximately 97 percent of the mercury is captured from the syngas by dual activated carbon beds.

CO_2 emissions represent the uncontrolled discharge from the process.

The carbon balance for the plant is shown in Exhibit 3-28. The carbon input to the plant consists of carbon in the air in addition to carbon in the coal. Carbon in the air is not neglected here since the Aspen model accounts for air components throughout. Carbon leaves the plant as unburned carbon in the slag and as CO_2 in the stack gas (includes the coal dryer vent gas and ASU vent gas).

Exhibit 3-28. Case B1A carbon balance

Carbon In		Carbon Out	
	kg/hr (lb/hr)		kg/hr (lb/hr)
Coal	125,897 (277,556)	Stack Gas	125,790 (277,320)
Air (CO_2)	523 (1,153)	CO_2 Product	–
		Slag	629 (1,388)
Total	**126,420 (278,709)**	**Total**	**126,420 (278,709)**

Exhibit 3-29 shows the sulfur balance for the plant. Sulfur input comes solely from the sulfur in the coal. Sulfur output includes the sulfur recovered in the Claus plant and sulfur emitted in the stack gas (includes the coal drying vent). Sulfur in the slag is considered to be negligible.

Exhibit 3-29. Case B1A sulfur balance

Sulfur In		Sulfur Out	
	kg/hr (lb/hr)		kg/hr (lb/hr)
Coal	4,950 (10,913)	Stack Gas	23 (50)
		CO_2 Product	–
		Elemental Sulfur	4,928 (10,863)
Total	**4,950 (10,913)**	**Total**	**4,950 (10,913)**

Exhibit 3-30 shows the overall water balance for the plant.

Water demand represents the total amount of water required for a particular process. Some water is recovered within the process, primarily as syngas condensate, and is re-used as internal recycle. The difference between demand and recycle is raw water withdrawal. Raw water withdrawal is defined as the water removed from the ground or diverted from a municipal source for use in the plant and was assumed to be provided 50 percent by a POTW and 50 percent from groundwater. Raw water withdrawal can be represented by the water metered from a raw water source and used in the plant processes for all purposes, such as cooling tower makeup, BFW makeup, quench system makeup, and slag handling makeup. The difference between water withdrawal and process water discharge is defined as water consumption and can be represented by the portion of the raw water withdrawn that is evaporated, transpired, incorporated into products, or otherwise not returned to the water source from which it was withdrawn. Water consumption represents the net impact of the plant process on the water source balance.

Exhibit 3-30. Case B1A water balance

Water Use	Water Demand	Internal Recycle	Raw Water Withdrawal	Process Water Discharge	Raw Water Consumption
	m^3/min (gpm)	m^3/min (gpm)	m^3/min (gpm)	m^3/min (gpm)	m^3/min (gpm)
Slag Handling	0.43 (113)	0.43 (113)	–	–	–
Slurry Water	–	–	–	–	–
Gasifier Water	–	–	–	–	–
Quench	–	–	–	–	–
HCl Scrubber	1.08 (285)	1.08 (285)	–	–	–
NH_3 Scrubber	0.90 (238)	0.80 (211)	0.10 (27)	–	0.10 (27)
Gasifier Steam	0.32 (83)	0.32 (83)	–	–	–
Condenser Makeup	**0.24 (63)**	**–**	**0.24 (63)**	**–**	**0.24 (63)**
BFW Makeup	0.21 (55)	–	0.21 (55)	–	0.21 (55)
Gasifier Steam	–	–	–	–	–
Shift Steam	–	–	–	–	–
N_2 Humidification	0.03 (8)	–	0.03 (8)	–	0.03 (8)
Cooling Tower	**15.51 (4,098)**	**0.23 (61)**	**15.28 (4,038)**	**3.49 (922)**	**11.79 (3,116)**
BFW Blowdown	–	0.21 (55)	-0.21 (-55)	–	-0.21 (-55)
ASU Knockout	–	0.02 (5)	-0.02 (-5)	–	-0.02 (-5)
Total	**18.47 (4,880)**	**2.85 (753)**	**15.62 (4,127)**	**3.49 (922)**	**12.13 (3,206)**

An overall plant energy balance is provided in tabular form in Exhibit 3-31. The power out is the combined CT and steam turbine power prior to generator losses. The power at the generator terminals (shown in Exhibit 3-25) is calculated by multiplying the power out by a combined generator efficiency of 98.5 percent.

Exhibit 3-31. Case B1A overall energy balance (0°C [32°F] reference)

	HHV	Sensible + Latent	Power	Total
Heat In, MMBtu/hr (GJ/hr)				
Coal	5,359 (5,080)	4.5 (4.2)	–	5,364 (5,084)
Air	–	116.2 (110.1)	–	116.2 (110.1)
Raw Water Makeup	–	58.7 (55.7)	–	58.7 (55.7)
Auxiliary Power	–	–	451.7 (428.2)	451.7 (428.2)
TOTAL	**5,359 (5,080)**	**179.4 (170.1)**	**451.7 (428.2)**	**5,990 (5,678)**
Heat Out, MMBtu/hr (GJ/hr)				
Misc. Process Steam	–	5.0 (4.7)	–	5.0 (4.7)
Slag	20.6 (19.6)	33.4 (31.6)	–	54.0 (51.2)
Stack Gas	–	834 (790)	–	834 (790)
Sulfur	45.7 (43.3)	0.6 (0.6)	–	46.2 (43.8)
Motor Losses and Design Allowances	–	–	54.5 (51.6)	54.5 (51.6)
Cooling Tower Load[A]	–	2,026 (1,920)	–	2,026 (1,920)
CO_2 Product Stream	–	–	–	–
Blowdown Streams	–	33.4 (31.7)	–	33.4 (31.7)
Ambient Losses[B]	–	137.1 (129.9)	–	137.1 (129.9)
Power	–	–	2,755 (2,611)	2,755 (2,611)
TOTAL	**66.3 (62.8)**	**3,069 (2,909)**	**2,809 (2,663)**	**5,945 (5,635)**
Unaccounted Energy[c]	–	–	–	45.7 (43.3)

[A]Includes condenser, AGR, and miscellaneous cooling loads
[B]Ambient losses include all losses to the environment through radiation, convection, etc. Sources of these losses include the combustor, reheater, superheater, and transformers
[C]By difference

3.2.5.2 Energy and Mass Balance Diagrams

Energy and mass balance diagrams are shown for the following subsystems in Exhibit 3-32 through Exhibit 3-34:

- Coal gasification and ASU
- Syngas cleanup, sulfur recovery, and tail gas recycle
- Combined cycle power generation, steam, and FW

Exhibit 3-32. Case B1A coal gasification and ASU energy and mass balance

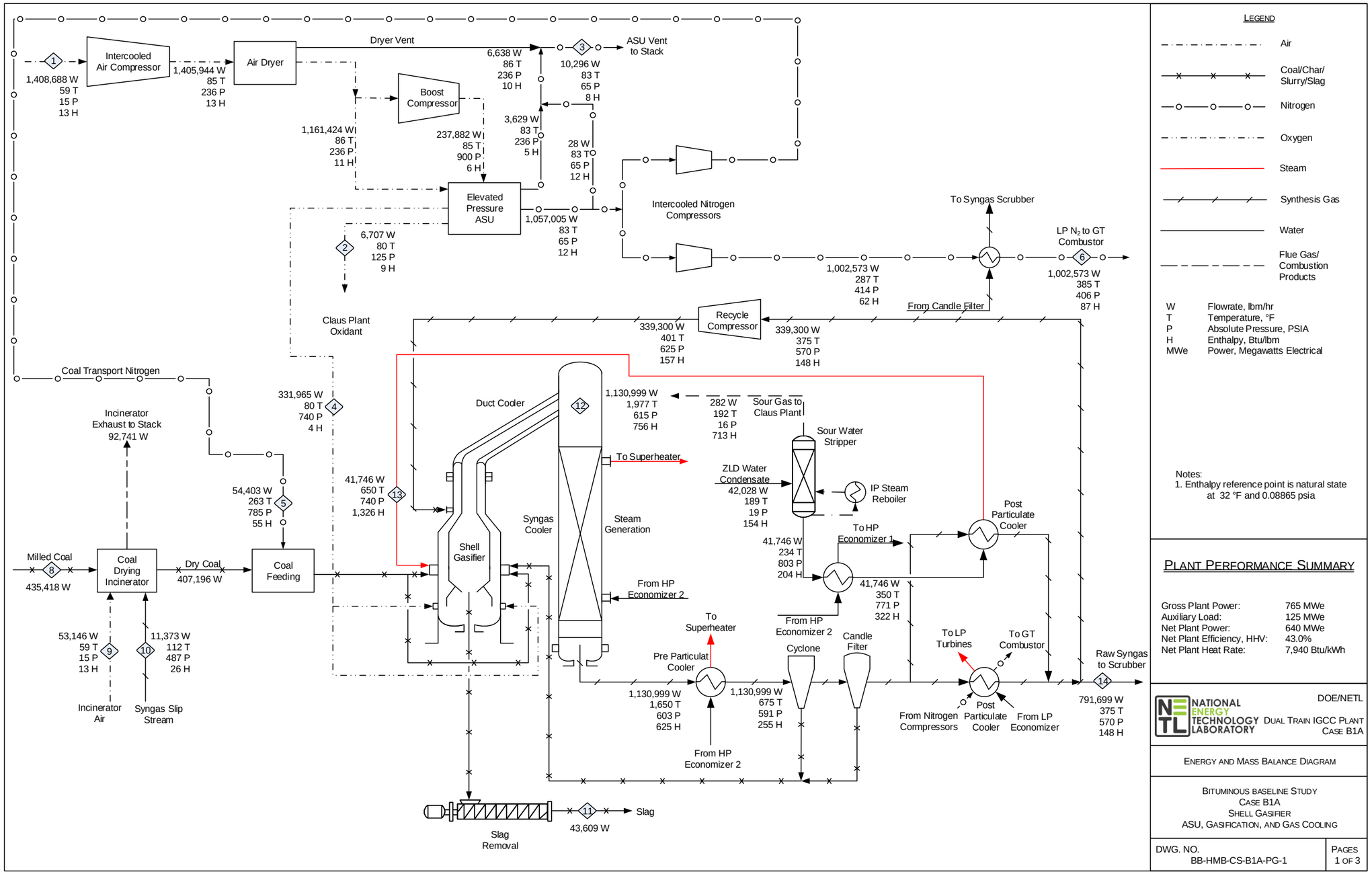

Exhibit 3-33. Case B1A syngas cleanup energy and mass balance

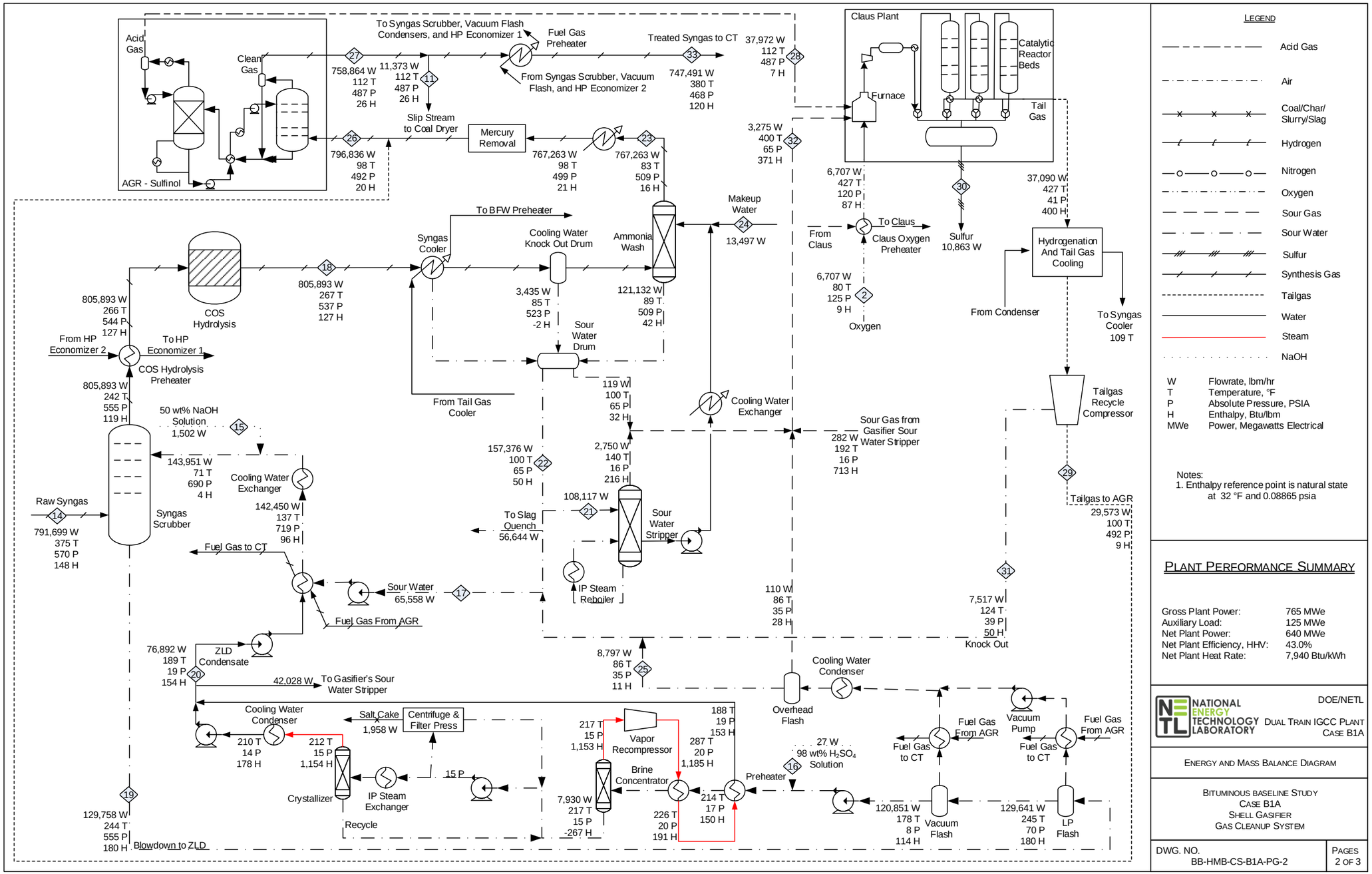

Exhibit 3-34. Case B1A combined cycle power generation energy and mass balance

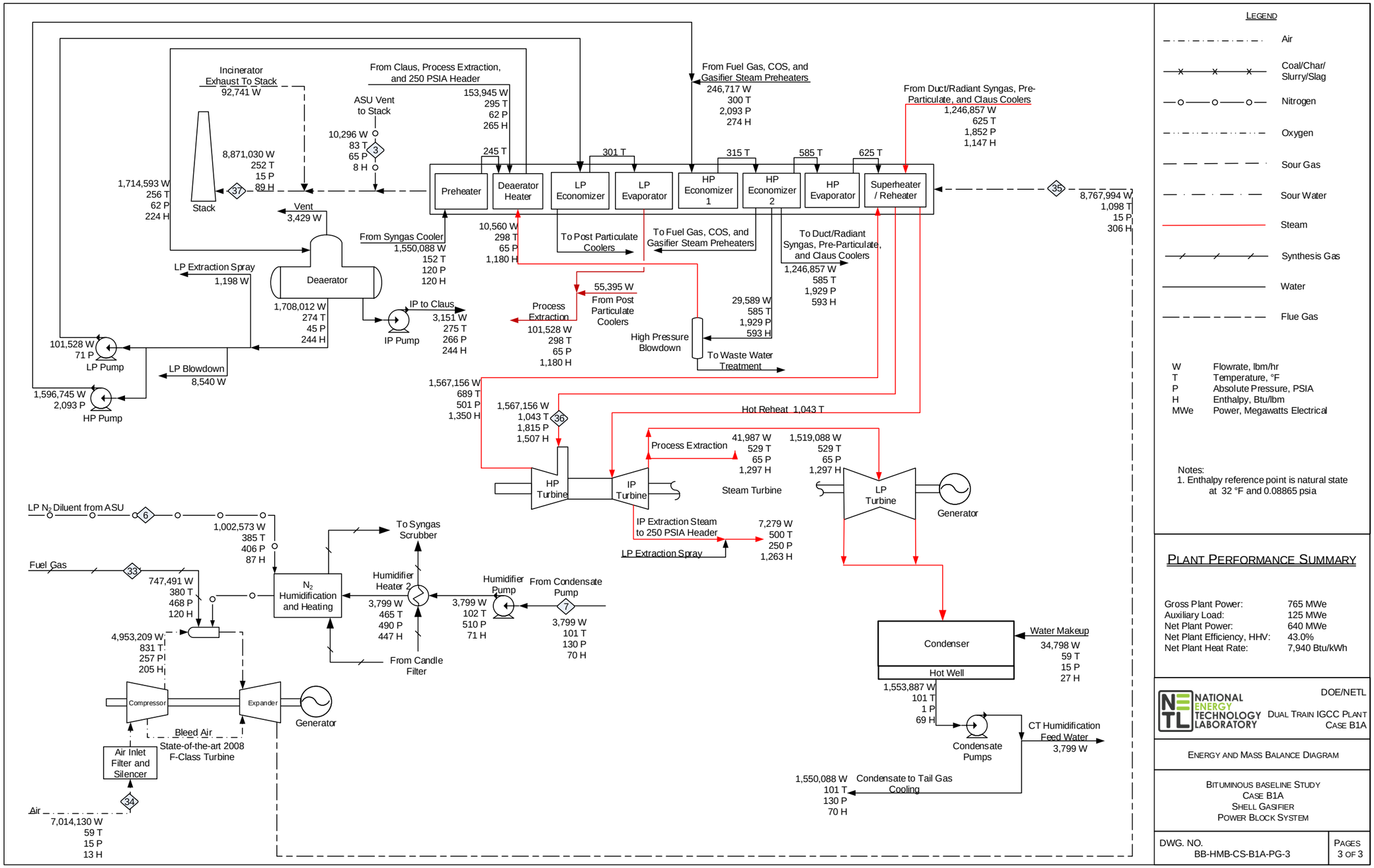

This page intentionally left blank

3.2.6 Case B1A – Major Equipment List

Major equipment items for the Shell gasifier with no CO_2 capture are shown in the following tables. In general, the design conditions include a 10 percent design allowance for flows and heat duties and a 21 percent design allowance for heads on pumps and fans.

Case B1A – Account 1: Coal Handling

Equipment No.	Description	Type	Design Condition	Operating Qty.	Spares
1	Bottom Trestle Dumper and Receiving Hoppers	N/A	181 tonne (200 ton)	2	0
2	Feeder	Belt	570 tonne/hr (630 tph)	2	0
3	Conveyor No. 1	Belt	1,130 tonne/hr (1,250 tph)	1	0
4	Conveyor No. 2	Belt	1,130 tonne/hr (1,250 tph)	1	0
5	Stacker/Reclaimer	Traveling, linear	1,130 tonne/hr (1,250 tph)	1	0
6	Reclaim Hopper	N/A	40 tonne (50 ton)	2	1
7	Feeder	Vibratory	160 tonne/hr (180 tph)	2	1
8	Conveyor No. 3	Belt w/ tripper	330 tonne/hr (360 tph)	1	0
9	Coal Surge Bin w/ Vent Filter	Dual outlet	160 tonne (180 ton)	2	0
10	Crusher	Impactor reduction	8 cm x 0 - 3 cm x 0 (3" x 0 - 1-1/4" x 0)	2	0
11	Conveyor No. 4	Belt w/tripper	330 tonne/hr (360 tph)	1	0
12	Conveyor No. 5	Belt w/ tripper	330 tonne/hr (360 tph)	1	0
13	Coal Silo w/ Vent Filter and Slide Gates	Field erected	720 tonne (800 ton)	3	0

Case B1A – Account 2: Coal Preparation and Feed

Equipment No.	Description	Type	Design Condition	Operating Qty.	Spares
1	Feeder	Vibratory	70 tonne/hr (80 tph)	3	0
2	Conveyor No. 6	Belt w/tripper	220 tonne/hr (240 tph)	1	0
3	Roller Mill Feed Hopper	Dual Outlet	430 tonne (480 ton)	1	0
4	Weigh Feeder	Belt	110 tonne/hr (120 tph)	2	0
5	Coal Dryer and Pulverizer	Rotary	110 tonne/hr (120 tph)	2	0
6	Coal Dryer Feed Hopper	Vertical Hopper	220 tonne (240 ton)	2	0

Case B1A – Account 3: Feedwater and Miscellaneous Balance of Plant Systems

Equipment No.	Description	Type	Design Condition	Operating Qty.	Spares
1	Demineralized Water Storage Tank	Vertical, cylindrical, outdoor	1,042,000 liters (275,000 gal)	2	0
2	Condensate Pumps	Vertical canned	6,510 lpm @ 90 m H_2O (1,720 gpm @ 300 ft H_2O)	2	1
3	Deaerator (integral w/ HRSG)	Horizontal spray type	428,000 kg/hr (943,000 lb/hr)	2	0
4	Intermediate Pressure Feedwater Pump	Horizontal centrifugal, single stage	440 lpm @ 20 m H_2O (120 gpm @ 70 ft H_2O)	2	1
5	High Pressure Feedwater Pump No. 1	Barrel type, multi-stage, centrifugal	HP water: 6,910 lpm @ 1,700 m H_2O (1,820 gpm @ 5,700 ft H_2O)	2	1
6	High Pressure Feedwater Pump No. 2	Barrel type, multi-stage, centrifugal	IP water: 1,070 lpm @ 210 m H_2O (280 gpm @ 670 ft H_2O)	2	1
7	Auxiliary Boiler	Shop fabricated, water tube	18,000 kg/hr, 2.8 MPa, 343°C (40,000 lb/hr, 400 psig, 650°F)	1	0

Equipment No.	Description	Type	Design Condition	Operating Qty.	Spares
8	Service Air Compressors	Flooded Screw	28 m^3/min @ 0.7 MPa (1,000 scfm @ 100 psig)	2	1
9	Instrument Air Dryers	Duplex, regenerative	28 m^3/min (1,000 scfm)	2	1
10	Closed Cycle Cooling Heat Exchangers	Plate and frame	219 GJ/hr (208 MMBtu/hr) each	2	0
11	Closed Cycle Cooling Water Pumps	Horizontal centrifugal	78,600 lpm @ 20 m H_2O (20,800 gpm @ 70 ft H_2O)	2	1
12	Engine-Driven Fire Pump	Vertical turbine, diesel engine	3,785 lpm @ 110 m H_2O (1,000 gpm @ 350 ft H_2O)	1	1
13	Fire Service Booster Pump	Two-stage horizontal centrifugal	2,650 lpm @ 80 m H_2O (700 gpm @ 250 ft H_2O)	1	1
14	Municipal Water Pumps	Stainless steel, single suction	3,580 lpm @ 20 m H_2O (950 gpm @ 60 ft H_2O)	2	1
15	Ground Water Pumps	Stainless steel, single suction	2,390 lpm @ 270 m H_2O (630 gpm @ 880 ft H_2O)	3	1
16	Filtered Water Pumps	Stainless steel, single suction	220 lpm @ 50 m H_2O (60 gpm @ 160 ft H_2O)	2	1
17	Filtered Water Tank	Vertical, cylindrical	107,000 liter (28,000 gal)	2	0
18	Makeup Water Demineralizer	Anion, cation, and mixed bed	170 lpm (40 gpm)	2	0
19	Liquid Waste Treatment System	N/A	10 years, 24-hour storm	1	0
20	Process Water Treatment	Vacuum flash, brine concentrator, and crystallizer	Vacuum Flash - Inlet: 32,000 kg/hr (71,000 lb/hr) Outlet: 5,369 ppmw Cl- Brine Concentrator Inlet - 30,000 kg/hr (66,000 lb/hr) Crystallizer Inlet - 2,000 kg/hr (4,000 lb/hr)	2	0

Case B1A – Account 4: Gasifier, ASU, and Accessories

Equipment No.	Description	Type	Design Condition	Operating Qty.	Spares
1	Gasifier	Pressurized dry-feed, entrained bed	2,600 tonne/day, 4.2 MPa (2,900 tpd, 615 psia)	2	0
2	Synthesis Gas Cooler	Convective spiral-wound tube boiler	282,000 kg/hr (622,000 lb/hr)	2	0
3	Synthesis Gas Cyclone	High efficiency	282,000 kg/hr (622,000 lb/hr) Design efficiency 90%	2	0
4	HCl Scrubber	Ejector Venturi	198,000 kg/hr (435,000 lb/hr)	2	0
5	Ammonia Wash	Counter-flow spray tower	192,000 kg/hr (423,000 lb/hr) @ 3.6 MPa (523 psia)	2	0
6	Primary Sour Water Stripper	Counter-flow with external reboiler	27,000 kg/hr (59,000 lb/hr)	2	0
7	Secondary Sour Water Stripper	Counter-flow with external reboiler	10,000 kg/hr (23,000 lb/hr)	2	0
8	Low Temperature Heat Recovery Coolers	Shell and tube with condensate drain	201,000 kg/hr (443,000 lb/hr)	6	0

Equipment No.	Description	Type	Design Condition	Operating Qty.	Spares
9	Low Temperature Heat Recovery Knockout Drum	Vertical with mist eliminator	193,000 kg/hr, 59°C, 3.6 MPa (425,000 lb/hr, 138°F, 526 psia)	2	0
10	Saturation Water Economizers	Shell and tube	N/A	4	0
11	HP Nitrogen Gas Saturator	Direct Injection	N/A	2	0
12	LP Nitrogen Gas Saturator	Direct Injection	250,000 kg/hr, 196°C, 2.8 MPa (551,000 lb/hr, 385°F, 406 psia)	2	0
13	Saturator Water Pump	Centrifugal	0 lpm @ 324 m H_2O (0 gpm @ 1062 ft H_2O)	2	2
14	Saturated Nitrogen Reheaters	Shell and tube	N/A	4	0
15	Synthesis Gas Reheaters	Shell and tube	Reheater 1: N/A Reheater 2: 300 kg/hr (1,000 lb/hr) Reheater 3: 101,000 kg/hr (224,000 lb/hr) Reheater 4: 85,000 kg/hr (187,000 lb/hr) Reheater 5: 186,000 kg/hr (411,000 lb/hr) Reheater 6: 186,000 kg/hr (411,000 lb/hr)	2	0
16	Flare Stack	Self-supporting, carbon steel, stainless steel top, pilot ignition	201,000 kg/hr (443,000 lb/hr) syngas	2	0
17	ASU Main Air Compressor	Centrifugal, multi-stage	5,000 m^3/min @ 1.6 MPa (170,000 scfm @ 236 psia)	2	0
18	Cold Box	Vendor design	2,000 tonne/day (2,200 tpd) of 95% purity O_2	2	0
19	Gasifier O_2 Pump	Centrifugal, multi-stage	1,000 m^3/min (36,000 scfm) Suction - 1.0 MPa (130 psia) Discharge - 5.1 MPa (740 psia)	2	0
20	AGR Nitrogen Boost Compressor	Centrifugal, multi-stage	N/A	2	0
21	High Pressure Nitrogen Diluent Compressor	Centrifugal, multi-stage	N/A	2	0
22	Low Pressure Nitrogen Diluent Compressor	Centrifugal, single-stage	3,520 m^3/min (124,000 scfm) Suction - 0.4 MPa (70 psia) Discharge - 2.9 MPa (410 psia)	2	0
23	Gasifier Nitrogen Boost Compressor	Centrifugal, single-stage	190 m^3/min (7,000 scfm) Suction - 0.4 MPa (70 psia) Discharge - 5.4 MPa (790 psia)	2	0

Case B1A – Account 5: Syngas Cleanup

Equipment No.	Description	Type	Design Condition	Operating Qty.	Spares
1	Mercury Adsorber 1	Sulfated carbon bed	191,000 kg/hr (422,000 lb/hr) 28°C (83°F) 3.5 MPa (509 psia)	2	0
2	Mercury Adsorber 2	Sulfated carbon bed	191,000 kg/hr (422,000 lb/hr) 37°C (98°F) 3.4 MPa (495 psia)	2	0
3	Sulfur Plant	Claus type	130 tonne/day (143 tpd)	1	0
4	COS Hydrolysis Reactor	Fixed bed, catalytic	201,000 kg/hr (443,000 lb/hr) 132°C (270°F) 3.7 MPa (540 psia)	2	0
5	COS Hydrolysis Heat Exchanger	Shell and Tube	4 GJ/hr (4 MMBtu/hr)	2	0
6	Acid Gas Removal Plant	Sulfinol	199,000 kg/hr (438,000 lb/hr) 37°C (98°F) 3.4 MPa (492 psia)	2	0
7	Hydrogenation Reactor	Fixed bed, catalytic	19,000 kg/hr (41,000 lb/hr) 219°C (427°F) 0.3 MPa (40.8425733 psia)	1	0
8	Tail Gas Recycle Compressor	Centrifugal	15,000 kg/hr (33,000 lb/hr) each	1	0
9	Candle Filter	Pressurized filter with pulse-jet cleaning	metallic filters	2	0

Case B1A – Account 6: Combustion Turbine and Accessories

Equipment No.	Description	Type	Design Condition	Operating Qty.	Spares
1	Combustion Turbine	State-of-the-art 2008 F-Class	232 MW	2	0
2	Combustion Turbine Generator	TEWAC	260 MVA @ 0.9 p.f., 24 kV, 60 Hz, 3-phase	2	0

Case B1A – Account 7: HRSG, Ductwork, and Stack

Equipment No.	Description	Type	Design Condition	Operating Qty.	Spares
1	Stack	CS plate, type 409SS liner	76 m (250 ft) high x 8.4 m (28 ft) diameter	1	0
2	Heat Recovery Steam Generator	Drum, multi-pressure with economizer section and integral deaerator	Main steam - 390,968 kg/hr, 12.4 MPa/561°C (861,936 lb/hr, 1,800 psig/1,043°F) Reheat steam - 390,968 kg/hr, 3.3 MPa/561°C (861,936 lb/hr, 477 psig/1,043°F)	2	0

Case B1A – Account 8: Steam Turbine and Accessories

Equipment No.	Description	Type	Design Condition	Operating Qty.	Spares
1	Steam Turbine	Commercially available advanced steam turbine	317 MW 12.4 MPa/561°C/561°C (1,800 psig/ 1,043°F/1,043°F)	1	0
2	Steam Turbine Generator	Hydrogen cooled, static excitation	350 MVA @ 0.9 p.f., 24 kV, 60 Hz, 3-phase	1	0
3	Surface Condenser	Single pass, divided waterbox including vacuum pumps	1,680GJ/hr (1,600 MMBtu/hr), Inlet water temperature 16°C (60°F), Water temperature rise 11°C (20°F)	1	0
4	Steam Bypass	One per HRSG	50% steam flow @ design steam conditions	2	0

Case B1A – Account 9: Cooling Water System

Equipment No.	Description	Type	Design Condition	Operating Qty.	Spares
1	Circulating Water Pumps	Vertical, wet pit	400,000 lpm @ 30 m (106,000 gpm @ 100 ft)	2	1
2	Cooling Tower	Evaporative, mechanical draft, multi-cell	11°C (51.5°F) wet bulb/ 16°C (60°F) CWT/ 27°C (80°F) HWT/ 2,230 GJ/hr (2,110 MMBtu/hr) heat duty	1	0

Case B1A – Account 10: Slag Recovery and Handling

Equipment No.	Description	Type	Design Condition	Operating Qty.	Spares
1	Slag Quench Tank	Water bath	207,000 liters (55,000 gal)	2	0
2	Slag Crusher	Roll	11 tonne/hr (12 tph)	2	0
3	Slag Depressurizer	Lock Hopper	11 tonne/hr (12 tph)	2	0
4	Slag Receiving Tank	Horizontal, weir	125,000 liters (33,000 gal)	2	0
5	Black Water Overflow Tank	Shop fabricated	56,000 liters (15,000 gal)	2	0
6	Slag Conveyor	Drag chain	11 tonne/hr (12 tph)	2	0
7	Slag Separation Screen	Vibrating	11 tonne/hr (12 tph)	2	0
8	Coarse Slag Conveyor	Belt/bucket	11 tonne/hr (12 tph)	2	0
9	Fine Ash Settling Tank	Vertical, gravity	177,000 liters (47,000 gal)	2	0
10	Fine Ash Recycle Pumps	Horizontal centrifugal	50 lpm @ 14 m H_2O (10 gpm @ 46 ft H_2O)	2	2
11	Grey Water Storage Tank	Field erected	57,000 liters (15,000 gal)	2	0
12	Grey Water Pumps	Centrifugal	200 lpm @ 430 m H_2O (50 gpm @ 1,420 ft H_2O)	2	2
13	Slag Storage Bin	Vertical, field erected	800 tonne (900 tons)	2	0
14	Unloading Equipment	Telescoping chute	90 tonne/hr (100 tph)	1	0

Case B1A – Account 11: Accessory Electric Plant

Equipment No.	Description	Type	Design Condition	Operating Qty.	Spares
1	CTG Transformer	Oil-filled	24 kV/345 kV, 260 MVA, 3-ph, 60 Hz	2	0
2	STG Transformer	Oil-filled	24 kV/345 kV, 320 MVA, 3-ph, 60 Hz	1	0
3	High Voltage Auxiliary Transformer	Oil-filled	345 kV/13.8 kV, 55 MVA, 3-ph, 60 Hz	2	0
4	Medium Voltage Transformer	Oil-filled	24 kV/4.16 kV, 27 MVA, 3-ph, 60 Hz	1	1
5	Low Voltage Transformer	Dry ventilated	4.16 kV/480 V, 4 MVA, 3-ph, 60 Hz	1	1
6	CTG Isolated Phase Bus Duct and Tap Bus	Aluminum, self-cooled	24 kV, 3-ph, 60 Hz	2	0
7	STG Isolated Phase Bus Duct and Tap Bus	Aluminum, self-cooled	24 kV, 3-ph, 60 Hz	1	0
8	Medium Voltage Switchgear	Metal clad	4.16 kV, 3-ph, 60 Hz	1	1
9	Low Voltage Switchgear	Metal enclosed	480 V, 3-ph, 60 Hz	1	1
10	Emergency Diesel Generator	Sized for emergency shutdown	750 kW, 480 V, 3-ph, 60 Hz	1	0

Case B1A – Account 12: Instrumentation and Control

Equipment No.	Description	Type	Design Condition	Operating Qty.	Spares
1	DCS - Main Control	Monitor/keyboard; Operator printer (laser color); Engineering printer (laser B&W)	Operator stations/printers and engineering stations/printers	1	0
2	DCS - Processor	Microprocessor with redundant input/output	N/A	1	0
3	DCS - Data Highway	Fiber optic	Fully redundant, 25% spare	1	0

3.2.7 Case B1A – Cost Estimating

<u>Costs Results</u>

The cost estimating methodology was described previously in Section 2.7. Exhibit 3-35 shows a detailed breakdown of the capital costs; Exhibit 3-36 shows the owner's costs, TOC, and TASC; Exhibit 3-37 shows the initial and annual O&M costs; and Exhibit 3-38 shows the LCOE breakdown.

The estimated TPC of the Shell gasifier with no CO_2 capture is $3,824/kW. Process contingency represents 5.1 percent of the TPC, and project contingency represents 14.5 percent. The LCOE is $105.8/MWh.

Exhibit 3-35. Case B1A total plant cost details

Case:		B1A	– Shell IGCC w/o CO_2				Estimate Type:			Conceptual	
Plant Size (MW, net):		640					Cost Base:			Dec 2018	
Item No.	Description	Equipment Cost	Material Cost	Labor		Bare Erected Cost	Eng'g CM H.O.& Fee	Contingencies		Total Plant Cost	
				Direct	Indirect			Process	Project	$/1,000	$/kW
1						Coal Handling					
1.1	Coal Receive & Unload	$929	$0	$448	$0	$1,377	$206	$0	$317	$1,900	$3
1.2	Coal Stackout & Reclaim	$3,037	$0	$726	$0	$3,763	$564	$0	$866	$5,193	$8
1.3	Coal Conveyors & Yard Crush	$28,971	$0	$7,375	$0	$36,346	$5,452	$0	$8,360	$50,157	$78
1.4	Other Coal Handling	$4,512	$0	$1,016	$0	$5,528	$829	$0	$1,271	$7,629	$12
1.9	Coal & Sorbent Handling Foundations	$0	$81	$212	$0	$294	$44	$0	$68	$405	$1
	Subtotal	**$37,450**	**$81**	**$9,776**	**$0**	**$47,307**	**$7,096**	**$0**	**$10,881**	**$65,284**	**$102**
2						Coal Preparation & Feed					
2.1	Coal Crushing & Drying	$2,242	$135	$322	$0	$2,700	$405	$0	$621	$3,726	$6
2.2	Prepared Coal Storage & Feed	$6,890	$1,655	$1,065	$0	$9,610	$1,441	$0	$2,210	$13,262	$21
2.3	Dry Coal Injection System	$8,792	$101	$805	$0	$9,698	$1,455	$0	$2,231	$13,384	$21
2.4	Miscellaneous Coal Preparation & Feed	$680	$497	$1,464	$0	$2,640	$396	$0	$607	$3,644	$6
2.9	Coal & Sorbent Feed Foundation	$0	$1,655	$1,420	$0	$3,075	$461	$0	$707	$4,243	$7
	Subtotal	**$18,604**	**$4,043**	**$5,076**	**$0**	**$27,723**	**$4,158**	**$0**	**$6,376**	**$38,258**	**$60**
3						Feedwater & Miscellaneous BOP Systems					
3.1	Feedwater System	$2,213	$3,794	$1,897	$0	$7,904	$1,186	$0	$1,818	$10,908	$17
3.2	Water Makeup & Pretreating	$4,489	$449	$2,544	$0	$7,482	$1,122	$0	$2,581	$11,186	$17
3.3	Other Feedwater Subsystems	$1,144	$375	$356	$0	$1,875	$281	$0	$431	$2,588	$4
3.4	Service Water Systems	$1,342	$2,561	$8,293	$0	$12,196	$1,829	$0	$4,208	$18,233	$29
3.5	Other Boiler Plant Systems	$297	$108	$270	$0	$675	$101	$0	$155	$932	$1
3.6	Natural Gas Pipeline and Start-Up System	$7,076	$304	$228	$0	$7,608	$1,141	$0	$1,750	$10,500	$16
3.7	Waste Water Treatment Equipment	$6,552	$0	$4,054	$0	$10,606	$1,591	$0	$3,659	$15,856	$25
3.8	Vacuum Flash, Brine Concentrator, & Crystallizer	$22,582	$0	$13,971	$0	$36,553	$5,483	$0	$12,611	$54,647	$85
3.9	Miscellaneous Plant Equipment	$15,068	$1,976	$7,657	$0	$24,701	$3,705	$0	$8,522	$36,928	$58
	Subtotal	**$60,763**	**$9,568**	**$39,271**	**$0**	**$109,602**	**$16,440**	**$0**	**$35,735**	**$161,778**	**$253**
4						Gasifier, ASU, & Accessories					
4.1	Gasifier & Auxiliaries (Shell)	$544,706	$0	$236,123	$0	$780,829	$117,124	$109,316	$151,090	$1,158,360	$1,810
4.2	Syngas Cooler	$51,993	$0	$22,538	$0	$74,532	$11,180	$10,434	$14,422	$110,568	$173
4.3	Air Separation Unit/Oxidant Compression	$52,343	$0	$19,886	$0	$72,230	$10,834	$0	$12,460	$95,524	$149
4.5	Miscellaneous Gasification Equipment	$4,021	$0	$1,743	$0	$5,765	$865	$0	$994	$7,624	$12

Case:	B1A	– Shell IGCC w/o CO_2					Estimate Type:			Conceptual	
Plant Size (MW, net):	640						Cost Base:			Dec 2018	
Item No.	Description	Equipment Cost	Material Cost	Labor		Bare Erected Cost	Eng'g CM H.O.& Fee	Contingencies		Total Plant Cost	
				Direct	Indirect			Process	Project	$/1,000	$/kW
4.6	Low Temperature Heat Recovery & Flue Gas Saturation	$43,966	$0	$16,704	$0	$60,670	$9,100	$0	$13,954	$83,724	$131
4.7	Flare Stack System	$1,835	$0	$324	$0	$2,158	$324	$0	$496	$2,979	$5
4.15	Major Component Rigging	$224	$0	$97	$0	$321	$48	$0	$55	$424	$1
4.16	Gasification Foundations	$0	$454	$271	$0	$725	$109	$0	$208	$1,042	$2
	Subtotal	**$699,089**	**$454**	**$297,686**	**$0**	**$997,229**	**$149,584**	**$119,751**	**$193,680**	**$1,460,244**	**$2,283**
5						Syngas Cleanup					
5.2	Sulfinol System	$4,884	$0	$4,116	$0	$9,001	$1,350	$0	$2,070	$12,421	$19
5.3	Elemental Sulfur Plant	$45,308	$8,832	$58,054	$0	$112,194	$16,829	$0	$25,805	$154,827	$242
5.6	Mercury Removal (Carbon Bed)	$191	$0	$145	$0	$336	$50	$17	$81	$484	$1
5.8	Carbonyl Sulfide (COS) Hydrolysis	$7,887	$0	$10,230	$0	$18,117	$2,718	$0	$4,167	$25,001	$39
5.9	Particulate Removal	$1,316	$0	$571	$0	$1,887	$283	$0	$326	$2,496	$4
5.10	Blowback Gas Systems	$739	$415	$232	$0	$1,385	$208	$0	$319	$1,911	$3
5.11	Fuel Gas Piping	$0	$2,686	$1,756	$0	$4,441	$666	$0	$1,021	$6,129	$10
5.12	Gas Cleanup Foundations	$0	$209	$141	$0	$350	$52	$0	$121	$523	$1
	Subtotal	**$60,326**	**$12,141**	**$75,243**	**$0**	**$147,710**	**$22,156**	**$17**	**$33,908**	**$203,792**	**$319**
6						Combustion Turbine & Accessories					
6.1	Combustion Turbine Generator	$74,945	$0	$5,399	$0	$80,343	$12,051	$4,017	$14,462	$110,873	$173
6.3	Combustion Turbine Accessories	$2,687	$0	$164	$0	$2,851	$428	$0	$492	$3,770	$6
6.4	Compressed Air Piping	$0	$510	$333	$0	$843	$126	$0	$194	$1,163	$2
6.5	Combustion Turbine Foundations	$0	$216	$250	$0	$466	$70	$0	$161	$697	$1
	Subtotal	**$77,632**	**$726**	**$6,145**	**$0**	**$84,503**	**$12,675**	**$4,017**	**$15,308**	**$116,504**	**$182**
7						HRSG, Ductwork, & Stack					
7.1	Heat Recovery Steam Generator	$35,544	$0	$6,883	$0	$42,427	$6,364	$0	$7,319	$56,110	$88
7.2	Heat Recovery Steam Generator Accessories	$12,691	$0	$2,457	$0	$15,149	$2,272	$0	$2,613	$20,034	$31
7.3	Ductwork	$0	$1,068	$748	$0	$1,817	$272	$0	$418	$2,507	$4
7.4	Stack	$9,083	$0	$3,389	$0	$12,471	$1,871	$0	$2,151	$16,494	$26
7.5	Heat Recovery Steam Generator, Ductwork & Stack Foundations	$0	$226	$227	$0	$453	$68	$0	$156	$677	$1
	Subtotal	**$57,318**	**$1,294**	**$13,704**	**$0**	**$72,316**	**$10,847**	**$0**	**$12,657**	**$95,821**	**$150**
8						Steam Turbine & Accessories					
8.1	Steam Turbine Generator & Accessories	$39,671	$0	$6,089	$0	$45,760	$6,864	$0	$7,894	$60,518	$95
8.2	Steam Turbine Plant Auxiliaries	$1,928	$0	$4,392	$0	$6,319	$948	$0	$1,090	$8,357	$13
8.3	Condenser & Auxiliaries	$7,137	$0	$4,027	$0	$11,164	$1,675	$0	$1,926	$14,765	$23
8.4	Steam Piping	$7,401	$0	$3,210	$0	$10,611	$1,592	$0	$3,051	$15,254	$24
8.5	Turbine Generator Foundations	$0	$301	$531	$0	$832	$125	$0	$287	$1,243	$2
	Subtotal	**$56,138**	**$301**	**$18,249**	**$0**	**$74,687**	**$11,203**	**$0**	**$14,247**	**$100,137**	**$157**

Case:	B1A – Shell IGCC w/o CO_2						Estimate Type:			Conceptual	
Plant Size (MW, net):	640						Cost Base:			Dec 2018	
Item No.	Description	Equipment Cost	Material Cost	Labor		Bare Erected Cost	Eng'g CM H.O.& Fee	Contingencies		Total Plant Cost	
				Direct	Indirect			Process	Project	$/1,000	$/kW
9	Cooling Water System										
9.1	Cooling Towers	$10,457	$0	$3,157	$0	$13,614	$2,042	$0	$2,348	$18,004	$28
9.2	Circulating Water Pumps	$1,377	$0	$94	$0	$1,471	$221	$0	$254	$1,946	$3
9.3	Circulating Water System Auxiliaries	$9,483	$0	$1,329	$0	$10,812	$1,622	$0	$1,865	$14,299	$22
9.4	Circulating Water Piping	$0	$5,355	$4,850	$0	$10,205	$1,531	$0	$2,347	$14,083	$22
9.5	Make-up Water System	$545	$0	$748	$0	$1,293	$194	$0	$297	$1,784	$3
9.6	Component Cooling Water System	$193	$231	$159	$0	$583	$87	$0	$134	$804	$1
9.7	Circulating Water System Foundations	$0	$443	$788	$0	$1,231	$185	$0	$425	$1,841	$3
	Subtotal	**$22,055**	**$6,029**	**$11,124**	**$0**	**$39,209**	**$5,881**	**$0**	**$7,671**	**$52,760**	**$82**
10	Slag Recovery & Handling										
10.1	Slag Dewatering & Cooling	$1,848	$0	$905	$0	$2,754	$413	$0	$475	$3,642	$6
10.2	Gasifier Ash Depressurization	$1,047	$0	$513	$0	$1,560	$234	$0	$269	$2,063	$3
10.3	Cleanup Ash Depressurization	$471	$0	$231	$0	$701	$105	$0	$121	$927	$1
10.6	Ash Storage Silos	$1,061	$0	$1,146	$0	$2,208	$331	$0	$381	$2,920	$5
10.7	Ash Transport & Feed Equipment	$409	$0	$95	$0	$505	$76	$0	$87	$667	$1
10.8	Miscellaneous Ash Handling Equipment	$59	$72	$21	$0	$152	$23	$0	$26	$201	$0
10.9	Ash/Spent Sorbent Foundation	$0	$416	$550	$0	$966	$145	$0	$333	$1,444	$2
	Subtotal	**$4,895**	**$488**	**$3,462**	**$0**	**$8,845**	**$1,327**	**$0**	**$1,692**	**$11,864**	**$19**
11	Accessory Electric Plant										
11.1	Generator Equipment	$2,843	$0	$2,145	$0	$4,987	$748	$0	$860	$6,596	$10
11.2	Station Service Equipment	$3,566	$0	$306	$0	$3,872	$581	$0	$668	$5,120	$8
11.3	Switchgear & Motor Control	$21,516	$0	$3,733	$0	$25,249	$3,787	$0	$4,356	$33,392	$52
11.4	Conduit & Cable Tray	$0	$95	$275	$0	$370	$56	$0	$106	$532	$1
11.5	Wire & Cable	$0	$1,305	$2,333	$0	$3,639	$546	$0	$1,046	$5,231	$8
11.6	Protective Equipment	$241	$0	$837	$0	$1,078	$162	$0	$186	$1,426	$2
11.7	Standby Equipment	$865	$0	$798	$0	$1,663	$249	$0	$287	$2,199	$3
11.8	Main Power Transformers	$6,569	$0	$134	$0	$6,703	$1,006	$0	$1,156	$8,865	$14
11.9	Electrical Foundations	$0	$76	$193	$0	$268	$40	$0	$93	$401	$1
	Subtotal	**$35,600**	**$1,477**	**$10,754**	**$0**	**$47,830**	**$7,174**	**$0**	**$8,758**	**$63,762**	**$100**
12	Instrumentation & Control										
12.1	Integrated Gasification and Combined Cycle Control Equipment	$660	$0	$286	$0	$946	$142	$0	$163	$1,251	$2
12.2	Combustion Turbine Control Equipment	$652	$0	$47	$0	$699	$105	$0	$121	$924	$1

Case:		B1A	– Shell IGCC w/o CO_2				Estimate Type:			Conceptual	
Plant Size (MW, net):		640					Cost Base:			Dec 2018	
Item No.	Description	Equipment Cost	Material Cost	Labor		Bare Erected Cost	Eng'g CM H.O.& Fee	Contingencies		Total Plant Cost	
				Direct	Indirect			Process	Project	$/1,000	$/kW
12.3	Steam Turbine Control Equipment	$602	$0	$92	$0	$695	$104	$0	$120	$919	$1
12.4	Other Major Component Control Equipment	$1,165	$0	$793	$0	$1,958	$294	$98	$352	$2,702	$4
12.5	Signal Processing Equipment	$904	$0	$29	$0	$933	$140	$0	$161	$1,234	$2
12.6	Control Boards, Panels & Racks	$262	$0	$172	$0	$434	$65	$22	$104	$625	$1
12.7	Distributed Control System Equipment	$9,484	$0	$309	$0	$9,794	$1,469	$490	$1,763	$13,515	$21
12.8	Instrument Wiring & Tubing	$472	$378	$1,510	$0	$2,360	$354	$118	$708	$3,540	$6
12.9	Other Instrumentation & Controls Equipment	$1,059	$0	$525	$0	$1,583	$238	$79	$285	$2,185	$3
	Subtotal	**$15,260**	**$378**	**$3,764**	**$0**	**$19,402**	**$2,910**	**$806**	**$3,777**	**$26,896**	**$42**
13						Improvements to Site					
13.1	Site Preparation	$0	$416	$9,500	$0	$9,916	$1,487	$0	$3,421	$14,825	$23
13.2	Site Improvements	$0	$1,888	$2,669	$0	$4,557	$684	$0	$1,572	$6,813	$11
13.3	Site Facilities	$2,947	$0	$3,309	$0	$6,256	$938	$0	$2,158	$9,353	$15
	Subtotal	**$2,947**	**$2,304**	**$15,478**	**$0**	**$20,729**	**$3,109**	**$0**	**$7,152**	**$30,991**	**$48**
14						Buildings & Structures					
14.1	Combustion Turbine Area	$0	$314	$177	$0	$491	$74	$0	$85	$649	$1
14.3	Steam Turbine Building	$0	$2,784	$3,964	$0	$6,748	$1,012	$0	$1,164	$8,924	$14
14.4	Administration Building	$0	$886	$643	$0	$1,529	$229	$0	$264	$2,022	$3
14.5	Circulation Water Pumphouse	$0	$135	$71	$0	$206	$31	$0	$35	$272	$0
14.6	Water Treatment Buildings	$0	$297	$289	$0	$586	$88	$0	$101	$775	$1
14.7	Machine Shop	$0	$486	$333	$0	$819	$123	$0	$141	$1,083	$2
14.8	Warehouse	$0	$379	$244	$0	$624	$94	$0	$108	$825	$1
14.9	Other Buildings & Structures	$0	$278	$216	$0	$494	$74	$0	$85	$653	$1
14.10	Waste Treating Building & Structures	$0	$747	$1,427	$0	$2,174	$326	$0	$375	$2,876	$4
	Subtotal	**$0**	**$6,306**	**$7,365**	**$0**	**$13,670**	**$2,051**	**$0**	**$2,358**	**$18,079**	**$28**
	Total	**$1,148,076**	**$45,588**	**$517,098**	**$0**	**$1,710,762**	**$256,614**	**$124,591**	**$354,201**	**$2,446,169**	**$3,824**

Exhibit 3-36. Case B1A owner's costs

Description	$/1,000	$/kW
Pre-Production Costs		
6 Months All Labor	$20,437	$32
1 Month Maintenance Materials	$4,969	$8
1 Month Non-Fuel Consumables	$730	$1
1 Month Waste Disposal	$645	$1
25% of 1 Months Fuel Cost at 100% CF	$2,064	$3
2% of TPC	$48,923	$76
Total	**$77,769**	**$122**
Inventory Capital		
60-day supply of fuel and consumables at 100% CF	$17,632	$28
0.5% of TPC (spare parts)	$12,231	$19
Total	**$29,863**	**$47**
Other Costs		
Initial Cost for Catalyst and Chemicals	$2,959	$5
Land	$900	$1
Other Owner's Costs	$366,925	$574
Financing Costs	$66,047	$103
Total Overnight Costs (TOC)	**$2,990,631**	**$4,675**
TASC Multiplier (IOU, 35 year)	1.154	
Total As-Spent Cost (TASC)	**$3,452,420**	**$5,397**

Exhibit 3-37. Case B1A initial and annual operating and maintenance costs

Case:	B1A	– Shell IGCC w/o CO_2			Cost Base:	Dec 2018
Plant Size (MW, net):	640	Heat Rate-net (Btu/kWh):		7,940	Capacity Factor (%):	80
Operating & Maintenance Labor						
Operating Labor				**Operating Labor Requirements per Shift**		
Operating Labor Rate (base):		38.50	**$/hour**	Skilled Operator:		2.0
Operating Labor Burden:		30.00	**% of base**	Operator:		10.0
Labor O-H Charge Rate:		25.00	**% of labor**	Foreman:		1.0
				Lab Techs, etc.:		3.0
				Total:		**16.0**
Fixed Operating Costs						
					Annual Cost	
					($)	**($/kW-net)**
Annual Operating Labor:					$7,015,008	$10.966
Maintenance Labor:					$25,684,775	$40.150
Administrative & Support Labor:					$8,174,946	$12.779
Property Taxes and Insurance:					$48,923,382	$76.476
Total:					**$89,798,111**	**$140.371**
Variable Operating Costs						
					($)	**($/MWh-net)**
Maintenance Material:					$47,700,297	$10.63989
Consumables						
	Initial Fill	**Per Day**	**Per Unit**	**Initial Fill**		
Water (gal/1000):	0	2,972	$1.90	$0	$1,648,664	$0.36775
Makeup and Waste Water Treatment Chemicals (ton):	0	8.85	$550.00	$0	$1,421,646	$0.31711
Sulfur-Impregnated Activated Carbon (ton):	60.4	0.083	$12,000.00	$724,967	$289,987	$0.06468
COS Hydrolysis Catalyst (ft^3):	1,347	0.923	$1,300.00	$1,750,996	$350,199	$0.07811
Sulfinol Solution (gal):	30,172	20.5	$16.00	$482,745	$95,804	$0.02137
Sodium Hydroxide (50 wt%, ton):	0	18.0	$600.00	$0	$3,157,197	$0.70424
Sulfuric Acid (98 wt%, ton):	0	0.320	$210.00	$0	$19,598	$0.00437
Claus Catalyst (ft^3):	w/equip.	1.81	$48.00	$0	$25,429	$0.00567
Subtotal:				**$2,958,708**	**$7,008,524**	**$1.56330**
Waste Disposal						
Sulfur-Impregnated Activated Carbon (ton):	0	0.083	$80.00	$0	$1,933	$0.00043
COS Hydrolysis Catalyst (ft^3):	0	0.923	$2.50	$0	$673	$0.00015
Sulfinol Solution (gal):	0	20.5	$0.35		$2,096	$0.00047
Claus Catalyst (ft^3):	0	1.81	$2.50		$1,324	$0.00030
Crystallizer Solids (ton):	0	34.0	$38.00		$377,258	$0.08415
Slag (ton):	0	523	$38.00	$0	$5,806,682	$1.29522
Subtotal:				**$0**	**$6,189,967**	**$1.38072**
By-Products						
Sulfur (tons):	0	130	$0.00	$0	$0	$0.00000
Subtotal:				**$0**	**$0**	**$0.00000**
Variable Operating Costs Total:				**$2,958,708**	**$60,898,788**	**$13.58390**
Fuel Cost						
Illinois Number 6 (ton):	0	5,225	$51.96	$0	$79,272,599	$17.68231
Total:				**$0**	**$79,272,599**	**$17.68231**

Exhibit 3-38. Case B1A LCOE breakdown

Component	Value, $/MWh	Percentage
Capital	54.5	52%
Fixed	20.0	19%
Variable	13.6	13%
Fuel	17.7	17%
Total (Excluding T&S)	**105.8**	**N/A**
CO_2 T&S	0.0	0%
Total (Including T&S)	**105.8**	**N/A**

3.2.8 Case B1B – Shell IGCC Power Plant with CO_2 Capture

In this section, the Shell gasification process for Case B1B is described. The plant configuration is nearly identical to that of Case B1A, with the exception that this case is configured to produce electric power with CO_2 capture.

The gross power output is constrained by the capacity of the two CTs, and since the CO_2 capture and compression process increases the auxiliary load on the plant, the net output is significantly reduced relative to Case B1A (519 MW versus 640 MW).

The process descriptions for Case B1B are similar to Case B1A with several notable exceptions to accommodate CO_2 capture. The system descriptions follow the BFD provided in Exhibit 3-39 with the associated stream tables–providing process data for the numbered streams in the BFD–provided in Exhibit 3-40. Rather than repeating the entire process description, only differences from Case B1A are reported here.

3.2.8.1 Coal Preparation and Feed Systems

No differences from Case B1A.

3.2.8.2 Gasifier

There are no differences in gasifier design from Case B1A. Downstream changes, such as syngas recycle, may impact overall syngas characteristics.

Exhibit 3-39. Case B1B block flow diagram, Shell IGCC with CO_2 capture

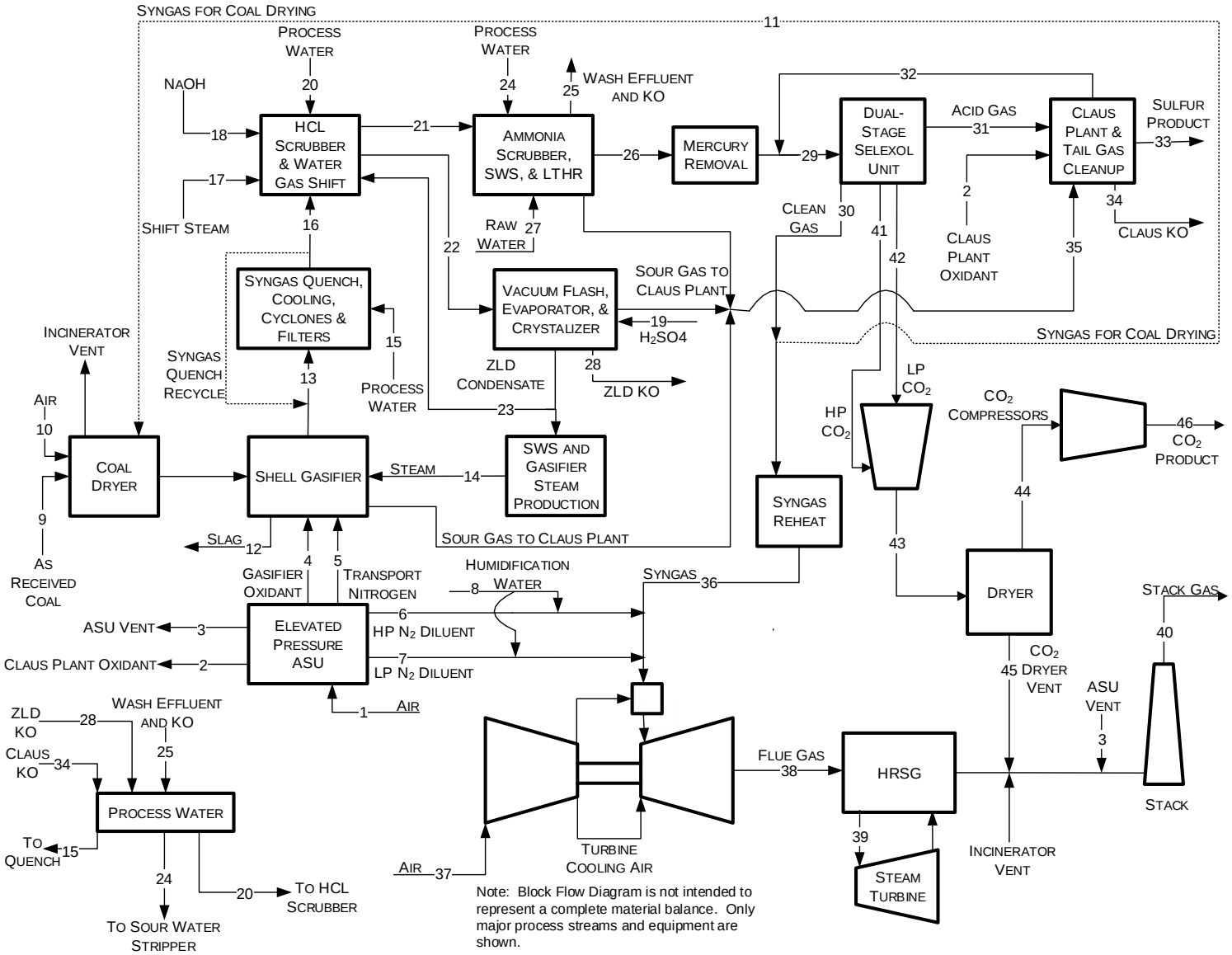

Exhibit 3-40. Case B1B stream table, Shell IGCC with capture

	1	2	3	4	5	6	7	8	9	10	11	12
V-L Mole Fraction												
Ar	0.0092	0.0343	0.2078	0.0343	0.0000	0.0000	0.0000	0.0000	0.0000	0.0092	0.0096	0.0000
CH_4	0.0000	0.0000	0.0000	0.0000	0.0000	0.0000	0.0000	0.0000	0.0000	0.0000	0.0004	0.0000
CO	0.0000	0.0000	0.0000	0.0000	0.0000	0.0000	0.0000	0.0000	0.0000	0.0000	0.0328	0.0000
CO_2	0.0003	0.0000	0.0365	0.0000	0.0000	0.0000	0.0000	0.0000	0.0000	0.0003	0.0278	0.0000
COS	0.0000	0.0000	0.0000	0.0000	0.0000	0.0000	0.0000	0.0000	0.0000	0.0000	0.0000	0.0000
H_2	0.0000	0.0000	0.0000	0.0000	0.0000	0.0000	0.0000	0.0000	0.0000	0.0000	0.8678	0.0000
H_2O	0.0099	0.0000	0.7536	0.0000	0.0000	0.0000	0.0000	1.0000	0.0000	0.0099	0.0001	0.0000
HCl	0.0000	0.0000	0.0000	0.0000	0.0000	0.0000	0.0000	0.0000	0.0000	0.0000	0.0000	0.0000
H_2S	0.0000	0.0000	0.0000	0.0000	0.0000	0.0000	0.0000	0.0000	0.0000	0.0000	0.0000	0.0000
N_2	0.7732	0.0157	0.0021	0.0157	0.9964	0.9964	0.9964	0.0000	0.0000	0.7732	0.0614	0.0000
NH_3	0.0000	0.0000	0.0000	0.0000	0.0000	0.0000	0.0000	0.0000	0.0000	0.0000	0.0000	0.0000
O_2	0.2074	0.9501	0.0000	0.9501	0.0036	0.0036	0.0036	0.0000	0.0000	0.2074	0.0000	0.0000
SO_2	0.0000	0.0000	0.0000	0.0000	0.0000	0.0000	0.0000	0.0000	0.0000	0.0000	0.0000	0.0000
NaCl	0.0000	0.0000	0.0000	0.0000	0.0000	0.0000	0.0000	0.0000	0.0000	0.0000	0.0000	0.0000
NaOH	0.0000	0.0000	0.0000	0.0000	0.0000	0.0000	0.0000	0.0000	0.0000	0.0000	0.0000	0.0000
Total	1.0000	1.0000	1.0000	1.0000	1.0000	1.0000	1.0000	1.0000	0.0000	1.0000	1.0000	0.0000
V-L Flowrate (kg_{mol}/hr)	23,745	97	213	5,018	945	7,960	9,439	1,142	0	999	304	0
V-L Flowrate (kg/hr)	685,201	3,124	5,007	161,609	26,484	223,090	264,552	20,580	0	28,834	1,827	0
Solids Flowrate (kg/hr)	0	0	0	0	0	0	0	0	211,967	0	0	21,230
Temperature (°C)	15	27	29	27	130	196	196	38	15	15	18	1,427
Pressure (MPa, abs)	0.10	0.86	0.45	5.10	5.62	3.24	2.80	0.90	0.10	0.10	2.89	4.24
Steam Table Enthalpy (kJ/kg)[A]	30.23	21.53	18.93	9.82	129.22	202.25	202.54	161.90	---	30.23	87.76	---
AspenPlus Enthalpy (kJ/kg)[B]	-97.58	-0.97	-9,807.28	-12.68	103.25	176.29	176.57	-15,818.39	-2,119.02	-97.58	-2,468.67	2,165.43
Density (kg/m^3)	1.2	11.2	16.9	68.6	46.4	23.1	19.9	993.1	---	1.2	7.1	---
V-L Molecular Weight	28.857	32.209	23.542	32.209	28.028	28.028	28.028	18.015	---	28.857	6.006	---
V-L Flowrate (lb_{mol}/hr)	52,348	214	469	11,062	2,083	17,548	20,809	2,518	0	2,203	671	0
V-L Flowrate (lb/hr)	1,510,610	6,888	11,038	356,287	58,388	491,829	583,237	45,371	0	63,569	4,029	0
Solids Flowrate (lb/hr)	0	0	0	0	0	0	0	0	467,308	0	0	46,803
Temperature (°F)	59	80	83	80	267	385	385	101	59	59	65	2,600
Pressure (psia)	14.7	125.0	65.0	740.0	815.0	470.0	406.1	130.0	14.7	14.7	418.7	615.0
Steam Table Enthalpy (Btu/lb)[A]	13.0	9.3	8.1	4.2	55.6	87.0	87.1	69.6	---	13.0	37.7	---
AspenPlus Enthalpy (Btu/lb)[B]	-42.0	-0.4	-4,216.4	-5.5	44.4	75.8	75.9	-6,800.7	-911.0	-42.0	-1,061.3	931.0
Density (lb/ft^3)	0.076	0.700	1.054	4.283	2.894	1.439	1.245	61.999	---	0.076	0.441	---

[A]Steam table reference conditions are 32.02°F & 0.089 psia

[B]Aspen thermodynamic reference state is the component's constituent elements in an ideal gas state at 25°C and 1 atm

Exhibit 3-40. Case B1B stream table, Shell IGCC with capture (continued)

	13	14	15	16	17	18	19	20	21	22	23	24
V-L Mole Fraction												
Ar	0.0082	0.0000	0.0000	0.0059	0.0000	0.0000	0.0000	0.0000	0.0048	0.0000	0.0000	0.0000
CH_4	0.0004	0.0000	0.0000	0.0003	0.0000	0.0000	0.0000	0.0000	0.0002	0.0000	0.0000	0.0000
CO	0.5163	0.0000	0.0000	0.3727	0.0000	0.0000	0.0000	0.0000	0.0168	0.0002	0.0000	0.0000
CO_2	0.0170	0.0000	0.0010	0.0125	0.0000	0.0000	0.0000	0.0007	0.2960	0.0001	0.0000	0.0007
COS	0.0006	0.0000	0.0000	0.0005	0.0000	0.0000	0.0000	0.0000	0.0000	0.0000	0.0000	0.0000
H_2	0.2637	0.0000	0.0000	0.1904	0.0000	0.0000	0.0000	0.0000	0.4397	0.0001	0.0000	0.0000
H_2O	0.1293	0.9998	0.9791	0.3656	1.0000	0.6895	0.1000	0.9795	0.2001	0.9931	0.9993	0.9795
HCl	0.0004	0.0000	0.0000	0.0003	0.0000	0.0000	0.0000	0.0000	0.0000	0.0000	0.0000	0.0000
H_2S	0.0073	0.0000	0.0001	0.0053	0.0000	0.0000	0.0000	0.0001	0.0046	0.0001	0.0000	0.0001
N_2	0.0516	0.0000	0.0000	0.0373	0.0000	0.0000	0.0000	0.0000	0.0302	0.0000	0.0000	0.0000
NH_3	0.0052	0.0002	0.0197	0.0092	0.0000	0.0000	0.0000	0.0197	0.0075	0.0039	0.0007	0.0197
O_2	0.0000	0.0000	0.0000	0.0000	0.0000	0.0000	0.0000	0.0000	0.0000	0.0000	0.0000	0.0000
SO_2	0.0000	0.0000	0.0000	0.0000	0.0000	0.0000	0.0000	0.0000	0.0000	0.0000	0.0000	0.0000
NaCl	0.0000	0.0000	0.0000	0.0000	0.0000	0.0000	0.0000	0.0000	0.0000	0.0026	0.0000	0.0000
NaOH	0.0000	0.0000	0.0000	0.0000	0.0000	0.3105	0.0000	0.0000	0.0000	0.0001	0.0000	0.0000
Total	1.0000	1.0000	1.0000	1.0000	1.0000	1.0000	0.1000	1.0000	1.0000	1.0000	1.0000	1.0000
V-L Flowrate (kg_{mol}/hr)	26,523	1,131	10,216	29,024	7,885	29	0	710	35,795	3,480	1,627	3,250
V-L Flowrate (kg/hr)	536,862	20,367	184,146	569,587	142,057	731	13	12,784	691,407	63,061	29,310	58,558
Solids Flowrate (kg/hr)	0	0	0	0	0	0	0	0	0	0	0	0
Temperature (°C)	1,079	343	188	232	288	16	15	66	207	190	88	66
Pressure (MPa, abs)	4.24	5.10	4.98	3.98	3.88	4.81	0.13	0.47	3.49	3.88	0.13	0.47
Steam Table Enthalpy (kJ/kg)[A]	2,034.53	3,083.36	767.08	1,188.89	2,971.61	-338.78	-8,206.86	236.66	812.09	792.08	367.95	236.66
AspenPlus Enthalpy (kJ/kg)[B]	-3,011.58	-12,884.30	-14,934.56	-6,578.92	-13,008.68	-13,665.00	-8,526.27	-15,471.27	-8,350.17	-15,048.88	-15,593.00	-15,471.27
Density (kg/m³)	7.6	19.9	835.0	19.0	16.9	1,531.7	1,791.5	964.5	17.0	873.7	965.6	964.5
V-L Molecular Weight	20.241	18.015	18.025	19.625	18.015	24.842	90.073	18.017	19.316	18.119	18.015	18.017
V-L Flowrate (lb_{mol}/hr)	58,474	2,492	22,523	63,987	17,384	65	0	1,564	78,915	7,673	3,587	7,166
V-L Flowrate (lb/hr)	1,183,578	44,900	405,973	1,255,724	313,182	1,612	29	28,183	1,524,293	139,026	64,618	129,099
Solids Flowrate (lb/hr)	0	0	0	0	0	0	0	0	0	0	0	0
Temperature (°F)	1,974	650	371	450	550	61	59	151	404	373	191	151
Pressure (psia)	615.0	740.0	722.7	577.7	562.7	697.7	18.2	67.7	506.1	562.7	19.3	67.7
Steam Table Enthalpy (Btu/lb)[A]	874.7	1,325.6	329.8	511.1	1,277.6	-145.7	-3,528.3	101.7	349.1	340.5	158.2	101.7
AspenPlus Enthalpy (Btu/lb)[B]	-1,294.7	-5,539.3	-6,420.7	-2,828.4	-5,592.7	-5,874.9	-3,665.6	-6,651.4	-3,589.9	-6,469.9	-6,703.8	-6,651.4
Density (lb/ft³)	0.473	1.240	52.127	1.183	1.055	95.623	111.841	60.212	1.064	54.544	60.280	60.212

[A]Steam table reference conditions are 32.02°F & 0.089 psia

[B]Aspen thermodynamic reference state is the component's constituent elements in an ideal gas state at 25°C and 1 atm

Exhibit 3-40. Case B1B stream table, Shell IGCC with capture (continued)

	25	26	27	28	29	30	31	32	33	34	35	36
V-L Mole Fraction												
Ar	0.0000	0.0061	0.0000	0.0000	0.0061	0.0096	0.0000	0.0094	0.0000	0.0000	0.0004	0.0096
CH_4	0.0000	0.0003	0.0000	0.0000	0.0003	0.0004	0.0000	0.0000	0.0000	0.0000	0.0000	0.0004
CO	0.0000	0.0212	0.0000	0.0000	0.0210	0.0328	0.0009	0.0053	0.0000	0.0000	0.0047	0.0328
CO_2	0.0010	0.3718	0.0000	0.0002	0.3752	0.0278	0.5119	0.6379	0.0000	0.0000	0.3130	0.0278
COS	0.0000	0.0000	0.0000	0.0000	0.0000	0.0000	0.0009	0.0000	0.0000	0.0000	0.0000	0.0000
H_2	0.0000	0.5551	0.0000	0.0000	0.5512	0.8678	0.0121	0.2434	0.0000	0.0000	0.0283	0.8678
H_2O	0.9786	0.0016	0.9999	0.9829	0.0016	0.0001	0.0227	0.0024	0.0000	1.0000	0.1553	0.0001
HCl	0.0000	0.0000	0.0000	0.0000	0.0000	0.0000	0.0000	0.0000	0.0000	0.0000	0.0000	0.0000
H_2S	0.0001	0.0058	0.0000	0.0003	0.0058	0.0000	0.4505	0.0050	0.0000	0.0000	0.0124	0.0000
N_2	0.0000	0.0382	0.0000	0.0000	0.0389	0.0614	0.0003	0.0966	0.0000	0.0000	0.0015	0.0614
NH_3	0.0202	0.0000	0.0000	0.0166	0.0000	0.0000	0.0007	0.0000	0.0000	0.0000	0.4844	0.0000
O_2	0.0000	0.0000	0.0000	0.0000	0.0000	0.0000	0.0000	0.0000	0.0000	0.0000	0.0000	0.0000
SO_2	0.0000	0.0000	0.0000	0.0000	0.0000	0.0000	0.0000	0.0000	0.0000	0.0000	0.0000	0.0000
NaCl	0.0000	0.0000	0.0001	0.0000	0.0000	0.0000	0.0000	0.0000	0.0000	0.0000	0.0000	0.0000
NaOH	0.0000	0.0000	0.0000	0.0000	0.0000	0.0000	0.0000	0.0000	0.0000	0.0000	0.0000	0.0000
Total	1.0000	1.0000	1.0000	1.0000	1.0000	1.0000	1.0000	1.0000	0.0000	1.0000	1.0000	1.0000
V-L Flowrate (kg_{mol}/hr)	13,281	28,350	2,712	685	28,710	18,136	367	360	0	213	136	17,831
V-L Flowrate (kg/hr)	239,394	556,172	48,864	12,327	567,710	108,923	14,111	11,538	0	3,846	3,460	107,096
Solids Flowrate (kg/hr)	0	0	0	0	0	0	0	0	5,312	0	0	0
Temperature (°C)	69	29	15	30	37	18	27	38	184	50	160	193
Pressure (MPa, abs)	0.45	3.18	0.10	0.24	3.07	2.89	0.18	3.07	0.12	0.11	0.45	2.72
Steam Table Enthalpy (kJ/kg)[A]	246.21	39.46	62.75	90.19	50.99	87.76	40.89	23.53	---	109.93	503.16	948.97
AspenPlus Enthalpy (kJ/kg)[B]	-15,448.64	-7,608.63	-15,905.25	-15,660.66	-7,602.44	-2,468.67	-5,643.65	-7,887.11	147.56	-15,860.00	-7,013.83	-1,607.46
Density (kg/m^3)	962.1	25.2	999.4	985.4	23.9	7.1	2.9	40.7	5,266.4	968.5	3.2	4.2
V-L Molecular Weight	18.026	19.618	18.019	18.008	19.774	6.006	38.417	32.010	---	18.016	25.491	6.006
V-L Flowrate (lb_{mol}/hr)	29,279	62,500	5,979	1,509	63,295	39,982	810	795	0	471	299	39,312
V-L Flowrate (lb/hr)	527,774	1,226,150	107,727	27,176	1,251,586	240,134	31,110	25,436	0	8,479	7,628	236,105
Solids Flowrate (lb/hr)	0	0	0	0	0	0	0	0	11,711	0	0	0
Temperature (°F)	156	84	59	85	99	65	80	100	364	121	321	380
Pressure (psia)	65.0	460.7	14.7	35.0	445.2	418.7	26.7	445.2	16.8	15.9	65.0	394.1
Steam Table Enthalpy (Btu/lb)[A]	105.9	17.0	27.0	38.8	21.9	37.7	17.6	10.1	---	47.3	216.3	408.0
AspenPlus Enthalpy (Btu/lb)[B]	-6,641.7	-3,271.1	-6,838.0	-6,732.9	-3,268.5	-1,061.3	-2,426.3	-3,390.8	63.4	-6,818.6	-3,015.4	-691.1
Density (lb/ft^3)	60.061	1.573	62.391	61.518	1.492	0.441	0.180	2.540	328.772	60.463	0.200	0.260

[A]Steam table reference conditions are 32.02°F & 0.089 psia

[B]Aspen thermodynamic reference state is the component's constituent elements in an ideal gas state at 25°C and 1 atm

Exhibit 3-40. Case B1B stream table, Shell IGCC with capture (continued)

	37	38	39	40	41	42	43	44	45	46
V-L Mole Fraction										
Ar	0.0092	0.0086	0.0000	0.0089	0.0001	0.0000	0.0000	0.0000	0.0000	0.0000
CH_4	0.0000	0.0000	0.0000	0.0000	0.0001	0.0000	0.0000	0.0000	0.0000	0.0000
CO	0.0000	0.0000	0.0000	0.0000	0.0010	0.0002	0.0008	0.0008	0.0000	0.0008
CO_2	0.0003	0.0081	0.0000	0.0082	0.9834	0.9983	0.9874	0.9903	0.0500	0.9903
COS	0.0000	0.0000	0.0000	0.0000	0.0000	0.0000	0.0000	0.0000	0.0000	0.0000
H_2	0.0000	0.0000	0.0000	0.0000	0.0107	0.0008	0.0080	0.0081	0.0000	0.0081
H_2O	0.0099	0.1279	1.0000	0.1346	0.0044	0.0007	0.0034	0.0005	0.9500	0.0005
HCl	0.0000	0.0000	0.0000	0.0000	0.0000	0.0000	0.0000	0.0000	0.0000	0.0000
H_2S	0.0000	0.0000	0.0000	0.0000	0.0000	0.0000	0.0000	0.0000	0.0000	0.0000
N_2	0.7732	0.7480	0.0000	0.7421	0.0004	0.0000	0.0003	0.0003	0.0000	0.0003
NH_3	0.0000	0.0000	0.0000	0.0000	0.0000	0.0000	0.0000	0.0000	0.0000	0.0000
O_2	0.2074	0.1074	0.0000	0.1062	0.0000	0.0000	0.0000	0.0000	0.0000	0.0000
SO_2	0.0000	0.0000	0.0000	0.0000	0.0000	0.0000	0.0000	0.0000	0.0000	0.0000
NaCl	0.0000	0.0000	0.0000	0.0000	0.0000	0.0000	0.0000	0.0000	0.0000	0.0000
NaOH	0.0000	0.0000	0.0000	0.0000	0.0000	0.0000	0.0000	0.0000	0.0000	0.0000
Total	1.0000	1.0000	1.0000	1.0000	1.0000	1.0000	1.0000	1.0000	1.0000	1.0000
V-L Flowrate (kg_{mol}/hr)	110,253	138,595	28,002	140,769	7,445	2,762	10,207	10,176	31	10,176
V-L Flowrate (kg/hr)	3,181,556	3,796,875	504,469	3,846,887	323,283	121,393	444,676	444,071	605	444,071
Solids Flowrate (kg/hr)	0	0	0	0	0	0	0	0	0	0
Temperature (°C)	15	563	533	121	-3	-11	29	29	29	30
Pressure (MPa, abs)	0.10	0.10	12.51	0.10	0.55	0.12	2.50	2.39	2.50	15.27
Steam Table Enthalpy (kJ/kg)[A]	30.23	847.95	3,429.64	353.74	-8.36	-9.59	2.39	0.57	138.13	-226.74
AspenPlus Enthalpy (kJ/kg)[B]	-97.58	-634.66	-12,550.65	-1,204.42	-8,973.30	-8,972.60	-8,962.21	-8,955.32	-15,225.03	-9,182.62
Density (kg/m^3)	1.2	0.4	36.8	0.8	11.2	2.3	49.8	47.2	319.0	837.3
V-L Molecular Weight	28.857	27.395	18.015	27.328	43.422	43.954	43.566	43.640	19.315	43.640
V-L Flowrate (lb_{mol}/hr)	243,065	305,551	61,734	310,341	16,414	6,089	22,503	22,434	69	22,434
V-L Flowrate (lb/hr)	7,014,130	8,370,676	1,112,164	8,480,933	712,716	267,626	980,342	979,009	1,333	979,009
Solids Flowrate (lb/hr)	0	0	0	0	0	0	0	0	0	0
Temperature (°F)	59	1,046	991	250	26	12	85	85	85	86
Pressure (psia)	14.7	15.1	1,814.7	14.8	80.0	16.7	363.0	346.5	363.0	2,214.7
Steam Table Enthalpy (Btu/lb)[A]	13.0	364.6	1,474.5	152.1	-3.6	-4.1	1.0	0.2	59.4	-97.5
AspenPlus Enthalpy (Btu/lb)[B]	-42.0	-272.9	-5,395.8	-517.8	-3,857.8	-3,857.5	-3,853.1	-3,850.1	-6,545.6	-3,947.8
Density (lb/ft^3)	0.076	0.026	2.298	0.053	0.697	0.146	3.106	2.946	19.917	52.273

[A]Steam table reference conditions are 32.02°F & 0.089 psia

[B]Aspen thermodynamic reference state is the component's constituent elements in an ideal gas state at 25°C and 1 atm

3.2.8.3 Raw Gas Cooling and Particulate Removal

The raw gas cooling system is identical to that of Case B1A's through the duct cooler. Following the duct cooler, the syngas cooler is replaced with a direct contact water quench, which cools the raw syngas from 899°C (1,650°F) to 399°C (750°F) while providing a portion of the water required for WGS and removing a significant portion of the PM from the syngas. The balance of the system is identical to Case B1A with the exception that the final stage of cooling produces a syngas at 232°C (450°F), rather than 191°C (375°F).

3.2.8.4 Quench Gas Compressor

Case B1B differs from Case B1A in that 21 percent of the cooled syngas is recycled back to the gasifier exit as quench gas, rather than 30 percent.

3.2.8.5 Syngas Scrubber

The design of the syngas scrubber used in Case B1B differs from Case B1A in that effluent recycle is required to achieve a chloride concentration in the blowdown (stream 22) of 5,000 ppmw.

The recycled effluent is cooled from 190°C (374°F) to 44°C (112°F) by preheating FW to the WGS steam generator before being mixed with cooled process water. Process water (stream 20) and ZLD condensate (stream 23) are cooled to 32°C (90°F) by preheating syngas prior to the CT and mixed with the cooled effluent before being cooled further to 21°C (70°F) with cooling water and injected into the scrubber.

Since the chloride concentration is maintained by adjusting the rate of effluent recycle, the rate of process water addition is used to maintain the HCl removal rate at 96 percent.

All other aspects of the syngas scrubber are identical to those described for Case B1A.

3.2.8.6 Water Gas Shift

The WGS process was described in Section 3.1.3. After the scrubber, the syngas is combined with steam (stream 17) to adjust the steam to dry gas ratio prior to the first WGS reactor. The rate of steam injection is controlled to maintain an exit steam to dry gas ratio of approximately 0.25. Two stages in total are used to convert 94.4 of the CO in the syngas to CO_2. The heat generated from the first reactor is used to produce more steam than is required (35,053 kg/hr [77,279 lb/hr] of 3.9 MPa (563 psia) steam is exported for use in the steam cycle) to maintain the desired steam to dry gas ratio while cooling the syngas to 253°C (487°F) prior to entering the second stage. Prior to the syngas being sent to the LTHR system (stream 21), the warm syngas from the second stage of WGS is cooled to 207°C (404°F) by preheating the FW of the WGS steam generator.

The WGS catalyst also serves to hydrolyze COS thus eliminating the need for a separate COS hydrolysis reactor.

3.2.8.7 Low Temperature Heat Recovery

Since the exit temperature of the WGS system used in this case was significantly higher than the COS hydrolysis unit used in Case B1A, two additional HXs were required for the LTHR system. The first stage cools the syngas from 207°C (404°F) to 162°C (323°F) by raising 0.4 MPa (65 psia) process steam. The second stage cools the syngas to 134°C (274°F) by preheating the FW to the WGS steam generator, preheating both the N_2 humidification water and syngas prior to the CT, and preheating the FW to the HRSG. The balance of the section is unchanged from Case B1A.

3.2.8.8 Sour Water Stripper and Ammonia Wash

No differences from Case B1A.

3.2.8.9 Process Water Treatment

The process water treatment system is identical to that used in Case B1A, with the exception that the vapor products from both the LP and vacuum flash stages are cooled to 46°C (115°F) prior to the cooling water condensing HX. The lower temperature reached in this case (46°C [115°F] versus 72°C [162°F]) is due to the lower exit temperature of the Selexol system, compared to the Sulfinol-M system.

3.2.8.10 Mercury Removal and AGR

Mercury removal is the same as in Case B1A.

The AGR process in Case B1B is a two-stage Selexol process (covered in Section 3.1.5.4) where H_2S is removed in the first stage and CO_2 in the second stage of absorption. The process results in four product streams, the clean syngas (stream 30), two CO_2-rich streams (streams 41 and 42) and an acid gas feed to the Claus plant (stream 31). The acid gas contains 45 vol% H_2S and 51 vol% CO_2 with the balance primarily water and H_2. The raw CO_2 stream from the Selexol process contains over 99 vol% CO_2.

3.2.8.11 Claus Unit

No differences from Case B1A.

3.2.8.12 Incinerator

No differences from Case B1A.

3.2.8.13 Power Block

In Case B1B, N_2 alone is not sufficient to provide the dilution necessary for the CT. In this case, the preheated syngas is diluted with humidified HP and LP N_2 (streams 6 and 7). The moisture added to the N_2 streams provides sufficient dilution for operating the CT. The exhaust gas (stream 38) exits the CT at a lower temperature (563°C [1,046°F]) than Case B1A due to the higher moisture content.

3.2.8.14 Air Separation Unit

No differences from Case B1A.

3.2.9 Case B1B – Performance Results

The Case B1B modeling assumptions were presented previously in Section 3.2.2.

The plant produces a net output of 519 MW at a net plant efficiency of 32.5 percent (HHV basis). Overall performance for the plant is summarized in Exhibit 3-41. Exhibit 3-42 provides a detailed breakdown of the auxiliary power requirements. The ASU accounts for approximately 62 percent of the auxiliary load between the MAC, booster compressor, N_2 compressors, O_2 pump, and ASU auxiliaries. The two-stage Selexol process and CO_2 compression account for an additional 24 percent of the auxiliary power load. The BFW and circulating water system (circulating water pumps and cooling tower fan) composes approximately 4 percent of the load, with all other systems together constituting the remaining 10 percent of the auxiliary load.

Exhibit 3-41. Case B1B plant performance summary

Performance Summary	
Combustion Turbine Power, MWe	464
Sweet Gas Expander Power, MWe	0
Steam Turbine Power, MWe	232
Total Gross Power, MWe	**696**
Air Separation Unit Main Air Compressor, kWe	65,800
Air Separation Unit Booster Compressor, kWe	5,180
N_2 Compressors, kWe	36,280
CO_2 Compression, kWe	31,030
Acid Gas Removal, kWe	11,330
Balance of Plant, kWe	27,220
Total Auxiliaries, MWe	**177**
Net Power, MWe	**519**
HHV Net Plant Efficiency, %	32.5%
HHV Net Plant Heat Rate, kJ/kWh (Btu/kWh)	11,075 (10,497)
HHV Cold Gas Efficiency, %	82.9%
HHV Combustion Turbine Efficiency, %	36.4%
LHV Net Plant Efficiency, %	33.7%
LHV Net Plant Heat Rate, kJ/kWh (Btu/kWh)	10,682 (10,124)
LHV Cold Gas Efficiency, %	81.3%
LHV Combustion Turbine Efficiency, %	42.7%

Performance Summary	
Steam Turbine Cycle Efficiency, %	42.1%
Steam Turbine Heat Rate, kJ/kWh (Btu/kWh)	8,551 (8,105)
Condenser Duty, GJ/hr (MMBtu/hr)	1,345 (1,275)
AGR Cooling Duty, GJ/hr (MMBtu/hr)	144 (137)
As-Received Coal Feed, kg/hr (lb/hr)	211,967 (467,308)
HHV Thermal Input, kWt	1,597,710
LHV Thermal Input, kWt	1,541,011
Raw Water Withdrawal, $(m^3/min)/MW_{net}$ (gpm/MW_{net})	0.037 (9.8)
Raw Water Consumption, $(m^3/min)/MW_{net}$ (gpm/MW_{net})	0.029 (7.7)
O_2:As-Received Coal	0.720

Exhibit 3-42. Case B1B plant power summary

Power Summary	
Combustion Turbine Power, MWe	464
Sweet Gas Expander Power, MWe	0
Steam Turbine Power, MWe	232
Total Gross Power, MWe	**696**
Auxiliary Load Summary	
Acid Gas Removal, kWe	11,330
Air Separation Unit Auxiliaries, kWe	1,000
Air Separation Unit Main Air Compressor, kWe	65,800
Air Separation Unit Booster Compressor, kWe	5,180
Ammonia Wash Pumps, kWe	120
Circulating Water Pumps, kWe	4,640
Claus Plant TG Recycle Compressor, kWe	1,220
Claus Plant/TGTU Auxiliaries, kWe	250
CO_2 Compression, kWe	31,030
Coal Dryer Air Compressor, kWe	80
Coal Handling, kWe	460
Coal Milling, kWe	2,180
Combustion Turbine Auxiliaries, kWe	1,000
Condensate Pumps, kWe	260
Cooling Tower Fans, kWe	2,400

Power Summary	
Feedwater Pumps, kWe	3,220
Gasifier Water Pump, kWe	40
Ground Water Pumps, kWe	460
Miscellaneous Balance of Plant[A], kWe	3,000
N_2 Compressors, kWe	36,280
N_2 Humidification Pump, kWe	20
O_2 Pump, kWe	330
Quench Water Pump, kWe	330
Shift Steam Pump, kWe	300
Slag Handling, kWe	550
Slag Reclaim Water Recycle Pump, kWe	0
Slurry Water Pump, kWe	0
Auxiliary Load Summary	
Sour Gas Compressors, kWe	140
Sour Water Recycle Pumps, kWe	0
Steam Turbine Auxiliaries, kWe	200
Syngas Recycle Compressor, kWe	880
Syngas Scrubber Pumps, kWe	120
Process Water Treatment Auxiliaries, kWe	1,310
Transformer Losses, kWe	2,710
Total Auxiliaries, MWe	**177**
Net Power, MWe	**519**

[A]Includes plant control systems, lighting, HVAC, and miscellaneous low voltage loads

3.2.9.1 Environmental Performance

The environmental targets for emissions of Hg, HCl, NOx, SO_2, CO_2, and PM were presented in Section 2.4. A summary of the plant air emissions for Case B1B is presented in Exhibit 3-43.

Exhibit 3-43. Case B1B air emissions

	kg/GJ (lb/MMBtu)	Tonne/year (ton/year)[A]	kg/MWh (lb/MWh)[B]
SO_2	0.000 (0.000)	0 (0)	0.000 (0.000)
NOx	0.021 (0.049)	846 (933)	0.173 (0.382)
Particulate	0.003 (0.007)	123 (136)	0.025 (0.056)
Hg	1.65E-7 (3.83E-7)	0.007 (0.007)	1.36E-6 (3.00E-6)
HCl	0.000 (0.000)	0.00 (0.00)	0.000 (0.000)
CO_2	9 (21)	355,305 (391,656)	73 (161)
CO_2[C]	-	-	98 (215)

[A]Calculations based on an 80 percent capacity factor
[B]Emissions based on gross power except where otherwise noted
[C]CO_2 emissions based on net power instead of gross power

The low level of SO_2 emissions is achieved by capturing the sulfur in the gas by the two-stage Selexol AGR process. The CO_2 capture target results in more sulfur compounds being removed than required in the environmental targets of Section 2.4. The clean syngas exiting the AGR process has a sulfur concentration of approximately 4 ppmv. This results in a concentration in the HRSG flue gas of less than 1 ppmv. The H_2S-rich regeneration gas from the AGR system is fed to a Claus plant, producing elemental sulfur. The Claus plant tail gas is compressed and recycled back to the AGR where most of the remaining sulfur is removed.

NOx emissions are limited using N_2 dilution and humidification to 15 ppmvd (as NO at 15 percent O_2). NH_3 in the syngas is removed with process condensate prior to the low-temperature AGR process and subsequently destroyed in the Claus plant burner. This helps lower NOx levels as well.

Particulate discharge to the atmosphere is limited to extremely low values using a cyclone and a barrier filter in addition to the syngas scrubber and the gas washing effect of the AGR absorber. The particulate emissions represent filterable particulate only.

Approximately 97 percent of mercury is captured from the syngas by dual activated carbon beds.

Ninety two percent of the CO_2 from the syngas is captured in the AGR system and compressed for sequestration. Because not all CO is converted to CO_2 in the shift reactors, the overall carbon removal is 90.0 percent.

The carbon balance for the plant is shown in Exhibit 3-44. The carbon input to the plant consists of carbon in the air in addition to carbon in the coal. Carbon leaves the plant as unburned carbon in the slag, the captured CO_2 product, and the CO_2 in the stack gas (includes the coal dryer vent gas and ASU vent gas). The carbon capture efficiency is defined as one minus the amount of carbon in the stack gas relative to the total carbon in less carbon contained in the slag, represented by the following fraction:

$$\left(1-\left(\frac{Carbon\ in\ Stack}{(Total\ Carbon\ In)-(Carbon\ in\ Slag)}\right)\right)*100=\left(1-\left(\frac{30{,}505}{299{,}052-1{,}489}\right)\right)*100=90\%$$

Exhibit 3-44. Case B1B carbon balance

Carbon In		Carbon Out	
	kg/hr (lb/hr)		kg/hr (lb/hr)
Coal	135,118 (297,884)	Stack Gas	13,837 (30,505)
Air (CO_2)	530 (1,168)	CO_2 Product	121,135 (267,058)
		Slag	676 (1,489)
Total	**135,648 (299,052)**	**Total**	**135,648 (299,052)**

Exhibit 3-45 shows the sulfur balance for the plant. Sulfur input comes solely from the sulfur in the coal. Sulfur output includes the sulfur recovered in the Claus plant and sulfur in the CO_2 product. Sulfur in the slag is considered negligible.

Exhibit 3-45. Case B1B sulfur balance

Sulfur In		Sulfur Out	
	kg/hr (lb/hr)		kg/hr (lb/hr)
Coal	5,313 (11,713)	Stack Gas	–
		CO_2 Product	1 (2)
		Elemental Sulfur	5,312 (11,711)
Total	**5,313 (11,713)**	**Total**	**5,313 (11,713)**

Exhibit 3-46 shows the overall water balance for the plant. The exhibit is presented in an identical manner as for Case B1A.

Exhibit 3-46. Case B1B water balance

Water Use	Water Demand	Internal Recycle	Raw Water Withdrawal	Process Water Discharge	Raw Water Consumption
	m^3/min (gpm)	m^3/min (gpm)	m^3/min (gpm)	m^3/min (gpm)	m^3/min (gpm)
Slag Handling	0.46 (122)	0.46 (122)	–	–	–
Slurry Water	–	–	–	–	–
Gasifier Water	–	–	–	–	–
Quench	3.07 (812)	3.07 (812)	–	–	–
HCl Scrubber	1.88 (497)	1.88 (497)	–	–	–
NH_3 Scrubber	1.77 (467)	0.95 (252)	0.82 (215)	–	0.82 (215)
Gasifier Steam	0.34 (90)	0.34 (90)	–	–	–

Water Use	Water Demand	Internal Recycle	Raw Water Withdrawal	Process Water Discharge	Raw Water Consumption
	m^3/min (gpm)	m^3/min (gpm)	m^3/min (gpm)	m^3/min (gpm)	m^3/min (gpm)
Condenser Makeup	**0.52 (139)**	**–**	**0.52 (139)**	**–**	**0.52 (139)**
BFW Makeup	0.18 (48)	–	0.18 (48)	–	0.18 (48)
Gasifier Steam	–	–	–	–	–
Shift Steam	–	–	–	–	–
N_2 Humidification	0.34 (91)	–	0.34 (91)	–	0.34 (91)
Cooling Tower	**18.09 (4,779)**	**0.20 (54)**	**17.89 (4,726)**	**4.07 (1,075)**	**13.82 (3,651)**
BFW Blowdown	–	0.18 (48)	-0.18 (-48)	–	-0.18 (-48)
ASU Knockout	–	0.02 (6)	-0.02 (-6)	–	-0.02 (-6)
Total	**26.14 (6,906)**	**6.91 (1,826)**	**19.23 (5,080)**	**4.07 (1,075)**	**15.16 (4,005)**

An overall plant energy balance is provided in tabular form in Exhibit 3-47. The power out is the combined CT and steam turbine power prior to generator losses. The power at the generator terminals (shown in Exhibit 3-41) is calculated by multiplying the power out by a combined generator efficiency of 98.5 percent.

Exhibit 3-47. Case B1B overall energy balance (0°C [32°F] reference)

	HHV	Sensible + Latent	Power	Total
Heat In, MMBtu/hr (GJ/hr)				
Coal	5,752 (5,452)	4.8 (4.6)	–	5,757 (5,456)
Air	–	117.7 (111.6)	–	117.7 (111.6)
Raw Water Makeup	–	72.3 (68.5)	–	72.3 (68.5)
Auxiliary Power	–	–	636.6 (603.4)	636.6 (603.4)
TOTAL	**5,752 (5,452)**	**194.9 (184.7)**	**636.6 (603.4)**	**6,583 (6,240)**
Heat Out, MMBtu/hr (GJ/hr)				
Misc. Process Steam	–	4.8 (4.6)	–	4.8 (4.6)
Slag	22.1 (21.0)	35.8 (34.0)	–	58.0 (55.0)
Stack Gas	–	1,361 (1,290)	–	1,361 (1,290)
Sulfur	49.2 (46.7)	0.6 (0.6)	–	49.9 (47.3)
Motor Losses and Design Allowances	–	–	55.0 (52.1)	55.0 (52.1)
Cooling Tower Load[A]	–	2,362 (2,239)	–	2,362 (2,239)
CO_2 Product Stream	–	-100.7 (-95.4)	–	-100.7 (-95.4)
Blowdown Streams	–	36.7 (34.8)	–	36.7 (34.8)
Ambient Losses[B]	–	139.2 (131.9)	–	139.2 (131.9)
Power	–	–	2,506 (2,376)	2,506 (2,376)

	HHV	Sensible + Latent	Power	Total
TOTAL	**71.4 (67.6)**	**3,839 (3,639)**	**2,561 (2,428)**	**6,472 (6,134)**
Unaccounted Energy[C]	–	–	–	111.4 (105.5)

[A]Includes condenser, AGR, and miscellaneous cooling loads
[B]Ambient losses include all losses to the environment through radiation, convection, etc. Sources of these losses include the combustor, reheater, superheater, and transformers
[C]By difference

3.2.9.2 Energy and Mass Balance Diagrams

Energy and mass balance diagrams are shown for the following subsystems in Exhibit 3-48 through Exhibit 3-50:

- Coal gasification and ASU
- Syngas cleanup including sulfur recovery and tail gas recycle
- Combined cycle power generation, steam, and FW

Exhibit 3-48. Case B1B coal gasification and ASU energy and mass balance

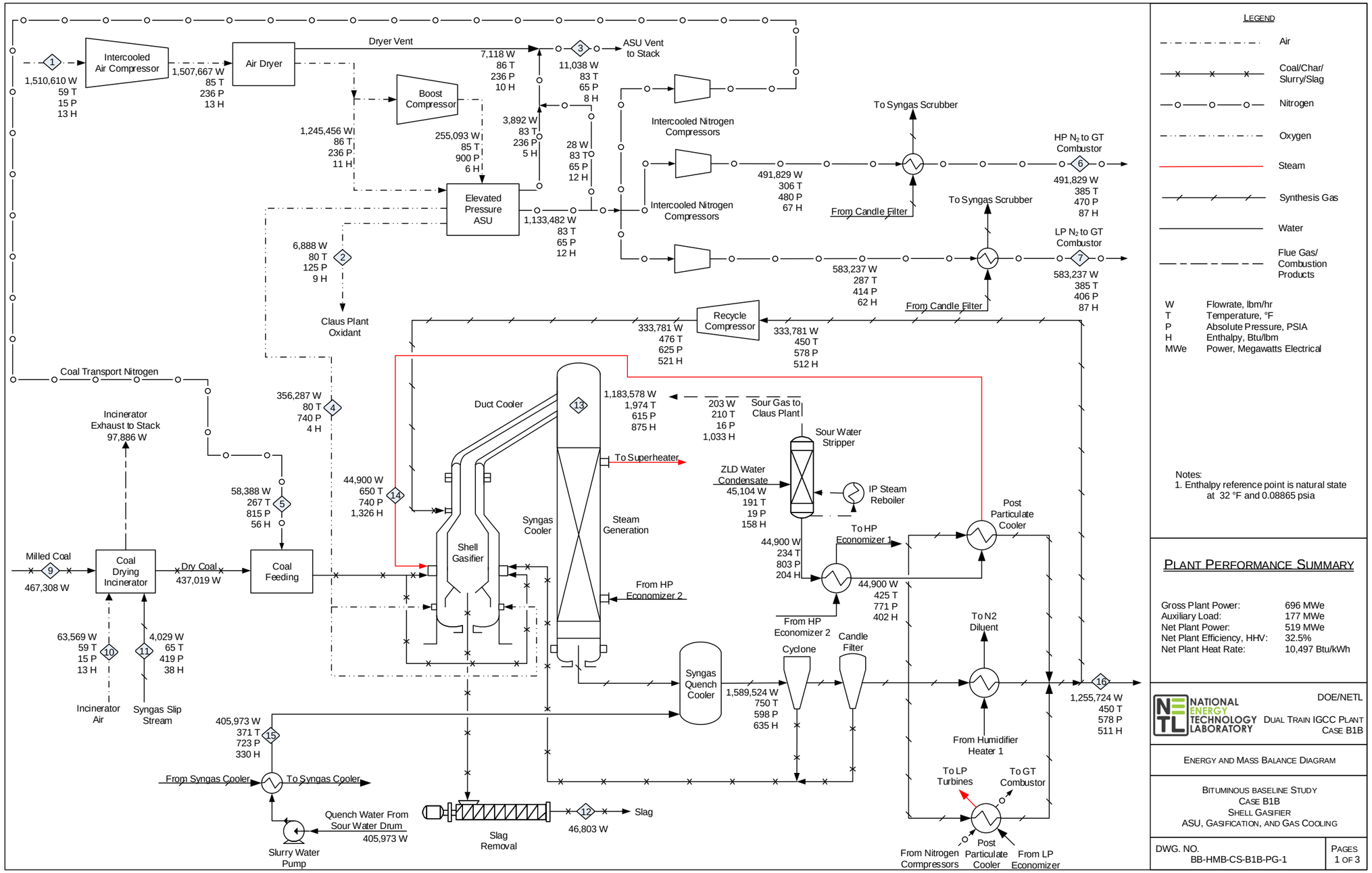

Exhibit 3-49. Case B1B syngas cleanup energy and mass balance

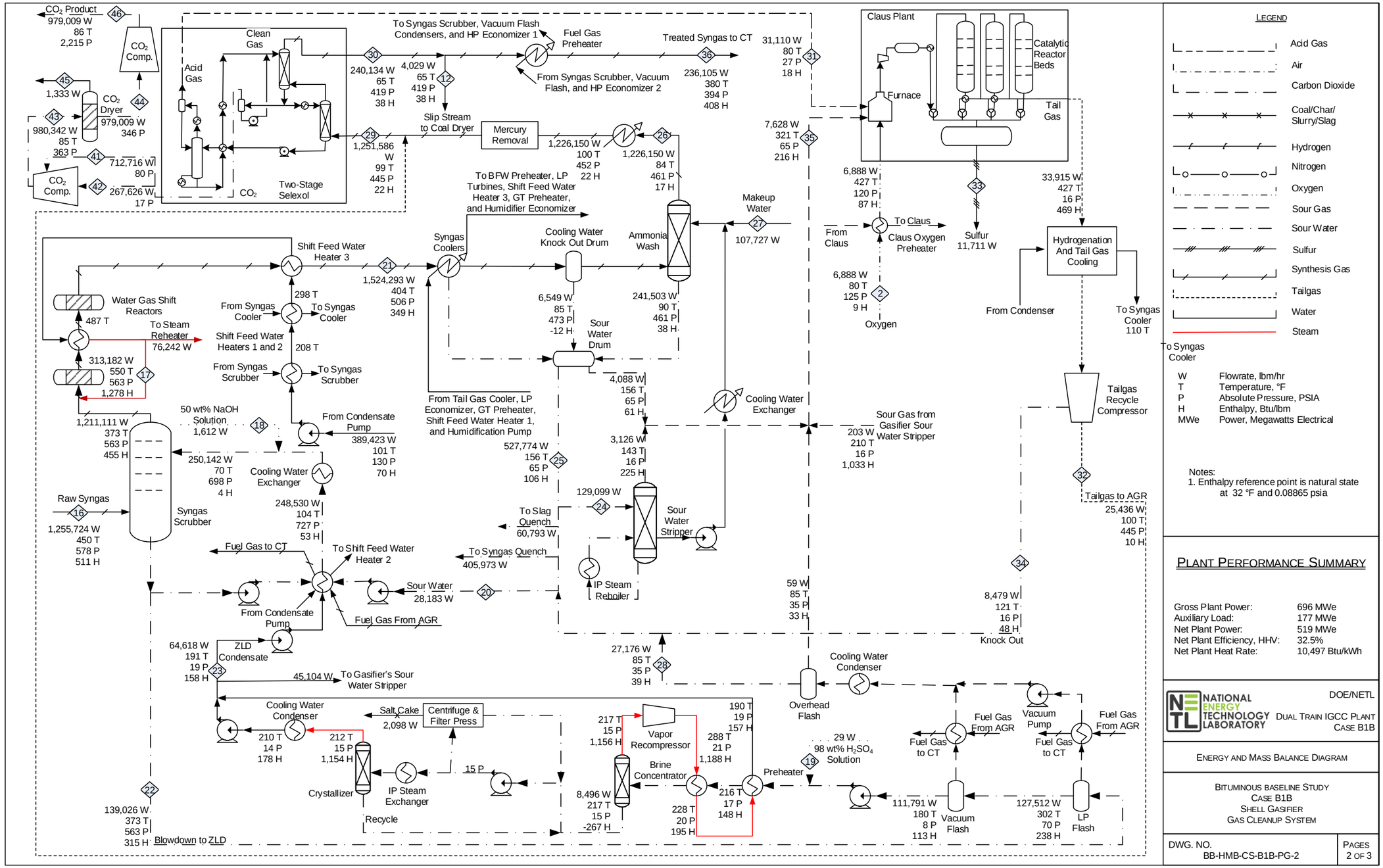

Exhibit 3-50. Case B1B combined cycle power generation energy and mass balance

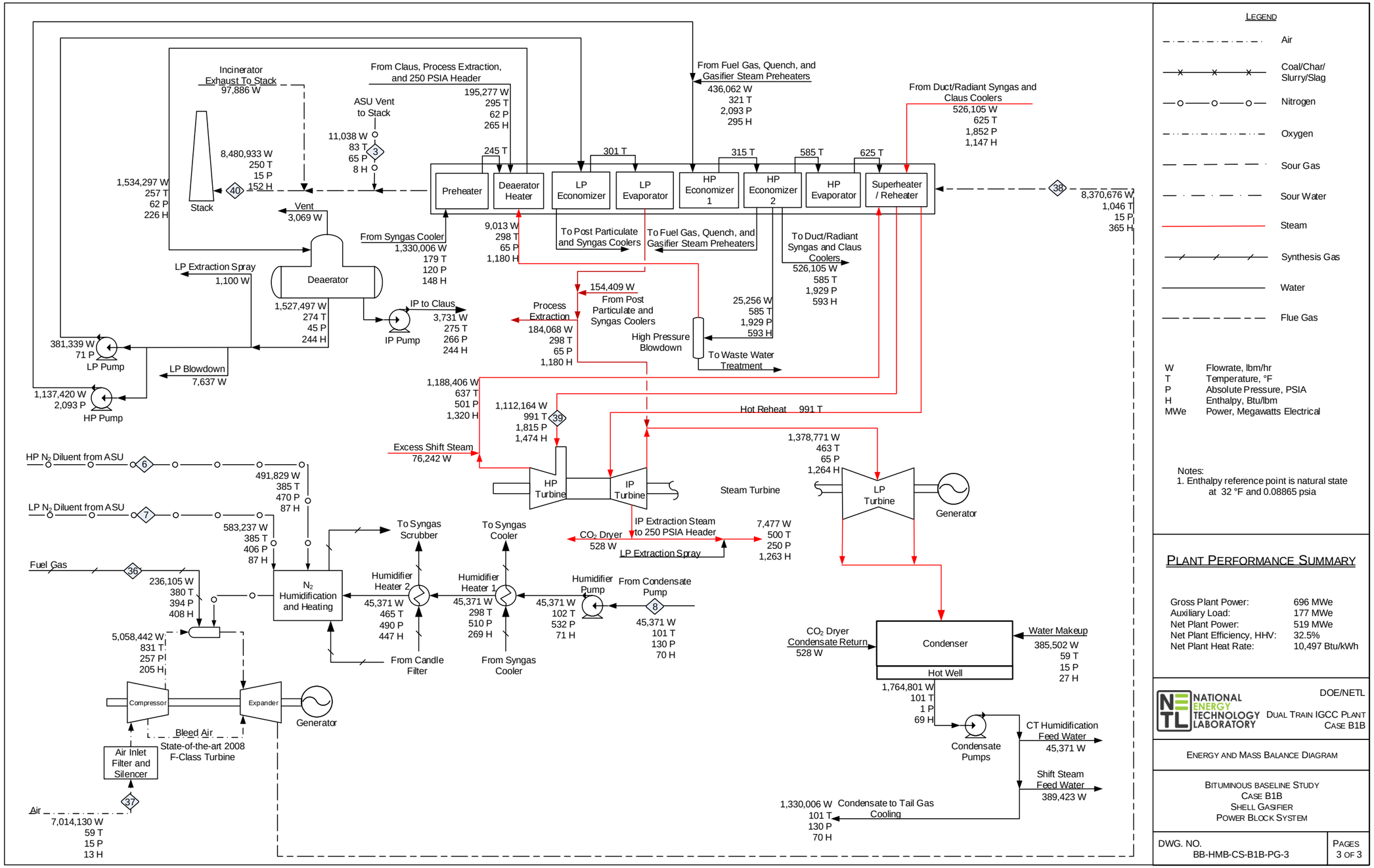

This page intentionally left blank

3.2.10 Case B1B – Major Equipment List

Major equipment items for the Shell gasifier with CO_2 capture are shown in the following tables. In general, the design conditions include a 10 percent design allowance for flows and heat duties and a 21 percent design allowance for heads on pumps and fans.

Case B1B – Account 1: Coal Handling

Equipment No.	Description	Type	Design Condition	Operating Qty.	Spares
1	Bottom Trestle Dumper and Receiving Hoppers	N/A	181 tonne (200 ton)	2	0
2	Feeder	Belt	570 tonne/hr (630 tph)	2	0
3	Conveyor No. 1	Belt	1,130 tonne/hr (1,250 tph)	1	0
4	Conveyor No. 2	Belt	1,130 tonne/hr (1,250 tph)	1	0
5	Stacker/Reclaimer	Traveling, linear	1,130 tonne/hr (1,250 tph)	1	0
6	Reclaim Hopper	N/A	40 tonne (50 ton)	2	1
7	Feeder	Vibratory	170 tonne/hr (190 tph)	2	1
8	Conveyor No. 3	Belt w/ tripper	350 tonne/hr (390 tph)	1	0
9	Coal Surge Bin w/ Vent Filter	Dual outlet	170 tonne (190 ton)	2	0
10	Crusher	Impactor reduction	8 cm x 0 - 3 cm x 0 (3" x 0 - 1-1/4" x 0)	2	0
11	Conveyor No. 4	Belt w/tripper	350 tonne/hr (390 tph)	1	0
12	Conveyor No. 5	Belt w/ tripper	350 tonne/hr (390 tph)	1	0
13	Coal Silo w/ Vent Filter and Slide Gates	Field erected	780 tonne (860 ton)	3	0

Case B1B – Account 2: Coal Preparation and Feed

Equipment No.	Description	Type	Design Condition	Operating Qty.	Spares
1	Feeder	Vibratory	80 tonne/hr (90 tph)	3	0
2	Conveyor No. 6	Belt w/tripper	230 tonne/hr (260 tph)	1	0
3	Roller Mill Feed Hopper	Dual Outlet	470 tonne (510 ton)	1	0
4	Weigh Feeder	Belt	120 tonne/hr (130 tph)	2	0
5	Coal Dryer and Pulverizer	Rotary	120 tonne/hr (130 tph)	2	0
6	Coal Dryer Feed Hopper	Vertical Hopper	230 tonne (260 ton)	2	0

Case B1B – Account 3: Feedwater and Miscellaneous Balance of Plant Systems

Equipment No.	Description	Type	Design Condition	Operating Qty.	Spares
1	Demineralized Water Storage Tank	Vertical, cylindrical, outdoor	11,548,000 liters (3,051,000 gal)	2	0
2	Condensate Pumps	Vertical canned	7,390 lpm @ 90 m H_2O (1,950 gpm @ 300 ft H_2O)	2	1
3	Deaerator (integral w/ HRSG)	Horizontal spray type	383,000 kg/hr (844,000 lb/hr)	2	0
4	Intermediate Pressure Feedwater Pump	Horizontal centrifugal, single stage	1,650 lpm @ 20 m H_2O (440 gpm @ 70 ft H_2O)	2	1
5	High Pressure Feedwater Pump No. 1	Barrel type, multi-stage, centrifugal	HP water: 4,920 lpm @ 1,700 m H_2O (1,300 gpm @ 5,700 ft H_2O)	2	1
6	High Pressure Feedwater Pump No. 2	Barrel type, multi-stage, centrifugal	IP water: 1,890 lpm @ 210 m H_2O (500 gpm @ 670 ft H_2O)	2	1
7	Auxiliary Boiler	Shop fabricated, water tube	18,000 kg/hr, 2.8 MPa, 343°C (40,000 lb/hr, 400 psig, 650°F)	1	0

Equipment No.	Description	Type	Design Condition	Operating Qty.	Spares
8	Service Air Compressors	Flooded Screw	28 m^3/min @ 0.7 MPa (1,000 scfm @ 100 psig)	2	1
9	Instrument Air Dryers	Duplex, regenerative	28 m^3/min (1,000 scfm)	2	1
10	Closed Cycle Cooling Heat Exchangers	Plate and frame	480 GJ/hr (455 MMBtu/hr) each	2	0
11	Closed Cycle Cooling Water Pumps	Horizontal centrifugal	172,200 lpm @ 20 m H_2O (45,500 gpm @ 70 ft H_2O)	2	1
12	Engine-Driven Fire Pump	Vertical turbine, diesel engine	3,785 lpm @ 110 m H_2O (1,000 gpm @ 350 ft H_2O)	1	1
13	Fire Service Booster Pump	Two-stage horizontal centrifugal	2,650 lpm @ 80 m H_2O (700 gpm @ 250 ft H_2O)	1	1
14	Municipal Water Pumps	Stainless steel, single suction	3,350 lpm @ 20 m H_2O (880 gpm @ 60 ft H_2O)	2	1
15	Ground Water Pumps	Stainless steel, single suction	3,350 lpm @ 270 m H_2O (880 gpm @ 880 ft H_2O)	2	1
16	Filtered Water Pumps	Stainless steel, single suction	2,050 lpm @ 50 m H_2O (540 gpm @ 160 ft H_2O)	2	1
17	Filtered Water Tank	Vertical, cylindrical	985,000 liter (260,000 gal)	2	0
18	Makeup Water Demineralizer	Anion, cation, and mixed bed	1,610 lpm (420 gpm)	2	0
19	Liquid Waste Treatment System	N/A	10 years, 24-hour storm	1	0
20	Process Water Treatment	Vacuum flash, brine concentrator, and crystallizer	Vacuum Flash - Inlet: 35,000 kg/hr (76,000 lb/hr) Outlet: 6,218 ppmw Cl- Brine Concentrator Inlet - 28,000 kg/hr (61,000 lb/hr) Crystallizer Inlet - 2,000 kg/hr (5,000 lb/hr)	2	0

Case B1B – Account 4: Gasifier, ASU, and Accessories

Equipment No.	Description	Type	Design Condition	Operating Qty.	Spares
1	Gasifier	Pressurized dry-feed, entrained bed	2,800 tonne/day, 4.2 MPa (3,100 tpd, 615 psia)	2	0
2	Synthesis Gas Cooler	Convective spiral-wound tube boiler	295,000 kg/hr (651,000 lb/hr)	2	0
3	Synthesis Gas Cyclone	High efficiency	397,000 kg/hr (874,000 lb/hr) Design efficiency 90%	2	0
4	HCl Scrubber	Ejector Venturi	313,000 kg/hr (691,000 lb/hr)	2	0
5	Ammonia Wash	Counter-flow spray tower	308,000 kg/hr (679,000 lb/hr) @ 3.3 MPa (473 psia)	2	0
6	Primary Sour Water Stripper	Counter-flow with external reboiler	32,000 kg/hr (71,000 lb/hr)	2	0
7	Secondary Sour Water Stripper	Counter-flow with external reboiler	11,000 kg/hr (25,000 lb/hr)	2	0
8	Low Temperature Heat Recovery Coolers	Shell and tube with condensate drain	380,000 kg/hr (838,000 lb/hr)	6	0

Equipment No.	Description	Type	Design Condition	Operating Qty.	Spares
9	Low Temperature Heat Recovery Knockout Drum	Vertical with mist eliminator	309,000 kg/hr, 59°C, 3.3 MPa (682,000 lb/hr, 138°F, 476 psia)	2	0
10	Saturation Water Economizers	Shell and tube	N/A	4	0
11	HP Nitrogen Gas Saturator	Direct Injection	123,000 kg/hr, 196°C, 3.2 MPa (271,000 lb/hr, 385°F, 470 psia)	2	0
12	LP Nitrogen Gas Saturator	Direct Injection	146,000 kg/hr, 196°C, 2.8 MPa (321,000 lb/hr, 385°F, 406 psia)	2	0
13	Saturator Water Pump	Centrifugal	200 lpm @ 342 m H_2O (100 gpm @ 1121 ft H_2O)	2	2
14	Saturated Nitrogen Reheaters	Shell and tube	N/A	4	0
15	Synthesis Gas Reheaters	Shell and tube	Reheater 1: N/A Reheater 2: 14,000 kg/hr (32,000 lb/hr) Reheater 3: 20,000 kg/hr (44,000 lb/hr) Reheater 4: 25,000 kg/hr (55,000 lb/hr) Reheater 5: 59,000 kg/hr (130,000 lb/hr) Reheater 6: 59,000 kg/hr (130,000 lb/hr)	2	0
16	Flare Stack	Self-supporting, carbon steel, stainless steel top, pilot ignition	302,000 kg/hr (666,000 lb/hr) syngas	2	0
17	ASU Main Air Compressor	Centrifugal, multi-stage	5,000 m^3/min @ 1.6 MPa (182,000 scfm @ 236 psia)	2	0
18	Cold Box	Vendor design	2,200 tonne/day (2,400 tpd) of 95% purity O_2	2	0
19	Gasifier O_2 Pump	Centrifugal, multi-stage	1,000 m^3/min (38,000 scfm) Suction - 1.0 MPa (130 psia) Discharge - 5.1 MPa (740 psia)	2	0
20	AGR Nitrogen Boost Compressor	Centrifugal, multi-stage	N/A	2	0
21	High Pressure Nitrogen Diluent Compressor	Centrifugal, multi-stage	2,000 m^3/min (61,000 scfm) Suction - 0.4 MPa (70 psia) Discharge - 3.3 MPa (480 psia)	2	0
22	Low Pressure Nitrogen Diluent Compressor	Centrifugal, single-stage	2,050 m^3/min (72,000 scfm) Suction - 0.4 MPa (70 psia) Discharge - 2.9 MPa (410 psia)	2	0
23	Gasifier Nitrogen Boost Compressor	Centrifugal, single-stage	210 m^3/min (7,000 scfm) Suction - 0.4 MPa (70 psia) Discharge - 5.6 MPa (820 psia)	2	0

Case B1B – Account 5: Syngas Cleanup

Equipment No.	Description	Type	Design Condition	Operating Qty.	Spares
1	Mercury Adsorber 1	Sulfated carbon bed	306,000 kg/hr (674,000 lb/hr) 29°C (84°F) 3.2 MPa (461 psia)	2	0
2	Mercury Adsorber 2	Sulfated carbon bed	306,000 kg/hr (674,000 lb/hr) 37°C (99°F) 3.1 MPa (448 psia)	2	0
3	Sulfur Plant	Claus type	140 tonne/day (155 tpd)	1	0
4	Water Gas Shift Reactors	Fixed bed, catalytic	190,000 kg/hr (419,000 lb/hr) 216°C (420°F) 3.9 MPa (560 psia)	4	0
5	Shift Reactor Heat Recovery Exchangers	Shell and Tube	Exchanger 1: 205 GJ/hr (194 MMBtu/hr) Exchanger 2: 89 GJ/hr (85 MMBtu/hr) Exchanger 3: 68 GJ/hr (64 MMBtu/hr) Exchanger 4: 79 GJ/hr (75 MMBtu/hr)	8	0
6	Acid Gas Removal Plant	Two-stage Selexol	624,000 kg/hr (1,377,000 lb/hr) 37°C (99°F) 3.1 MPa (445 psia)	1	0
7	Hydrogenation Reactor	Fixed bed, catalytic	17,000 kg/hr (37,000 lb/hr) 219°C (427°F) 0.1 MPa (16.4388411 psia)	1	0
8	Tail Gas Recycle Compressor	Centrifugal	13,000 kg/hr (28,000 lb/hr) each	1	0
9	Candle Filter	Pressurized filter with pulse-jet cleaning	metallic filters	2	0
10	CO_2 Dryer	Triethylene glycol	Inlet: 149 m^3/min @ 2.5 MPa (5,260 acfm @ 363 psia) Outlet: 2.4 MPa (346 psia) Water Recovered: 605 kg/hr (1,333 lb/hr)	1	0
11	CO_2 Compressor	Integrally geared, multi-stage centrifugal	10 m^3/min @ 15.3 MPa (343 acfm @ 2,217 psia)	1	0
12	CO_2 Aftercooler	Shell and tube heat exchanger	Outlet: 15.3 MPa, 30°C (2,215 psia, 86°F) Duty: 76 MMkJ/hr (72 MMBtu/hr)	1	0

Case B1B – Account 6: Combustion Turbine and Accessories

Equipment No.	Description	Type	Design Condition	Operating Qty.	Spares
1	Combustion Turbine	State-of-the-art 2008 F-Class	232 MW	2	0
2	Combustion Turbine Generator	TEWAC	260 MVA @ 0.9 p.f., 24 kV, 60 Hz, 3-phase	2	0

Case B1B – Account 7: HRSG, Ductwork, and Stack

Equipment No.	Description	Type	Design Condition	Operating Qty.	Spares
1	Stack	CS plate, type 409SS liner	76 m (250 ft) high x 8.5 m (28 ft) diameter	1	0
2	Heat Recovery Steam Generator	Drum, multi-pressure with economizer section and integral deaerator	Main steam - 277,458 kg/hr, 12.4 MPa/533°C (611,690 lb/hr, 1,800 psig/991°F) Reheat steam - 296,479 kg/hr, 3.3 MPa/533°C (653,623 lb/hr, 477 psig/991°F)	2	0

Case B1B – Account 8: Steam Turbine and Accessories

Equipment No.	Description	Type	Design Condition	Operating Qty.	Spares
1	Steam Turbine	Commercially available advanced steam turbine	244 MW 12.4 MPa/533°C/533°C (1,800 psig/ 991°F/991°F)	1	0
2	Steam Turbine Generator	Hydrogen cooled, static excitation	270 MVA @ 0.9 p.f., 24 kV, 60 Hz, 3-phase	1	0
3	Surface Condenser	Single pass, divided waterbox including vacuum pumps	1,480GJ/hr (1,400 MMBtu/hr), Inlet water temperature 16°C (60°F), Water temperature rise 11°C (20°F)	1	0
4	Steam Bypass	One per HRSG	50% steam flow @ design steam conditions	2	0

Case B1B – Account 9: Cooling Water System

Equipment No.	Description	Type	Design Condition	Operating Qty.	Spares
1	Circulating Water Pumps	Vertical, wet pit	466,000 lpm @ 30 m (123,000 gpm @ 100 ft)	2	1
2	Cooling Tower	Evaporative, mechanical draft, multi-cell	11°C (51.5°F) wet bulb/16°C (60°F) CWT/ 27°C (80°F) HWT/ 2,600 GJ/hr (2,460 MMBtu/hr) heat duty	1	0

Case B1B – Account 10: Slag Recovery and Handling

Equipment No.	Description	Type	Design Condition	Operating Qty.	Spares
1	Slag Quench Tank	Water bath	223,000 liters (59,000 gal)	2	0
2	Slag Crusher	Roll	12 tonne/hr (13 tph)	2	0
3	Slag Depressurizer	Lock Hopper	12 tonne/hr (13 tph)	2	0
4	Slag Receiving Tank	Horizontal, weir	134,000 liters (35,000 gal)	2	0
5	Black Water Overflow Tank	Shop fabricated	60,000 liters (16,000 gal)	2	0
6	Slag Conveyor	Drag chain	12 tonne/hr (13 tph)	2	0
7	Slag Separation Screen	Vibrating	12 tonne/hr (13 tph)	2	0
8	Coarse Slag Conveyor	Belt/bucket	12 tonne/hr (13 tph)	2	0
9	Fine Ash Settling Tank	Vertical, gravity	190,000 liters (50,000 gal)	2	0
10	Fine Ash Recycle Pumps	Horizontal centrifugal	50 lpm @ 14 m H_2O (10 gpm @ 46 ft H_2O)	2	2
11	Grey Water Storage Tank	Field erected	61,000 liters (16,000 gal)	2	0
12	Grey Water Pumps	Centrifugal	210 lpm @ 430 m H_2O (60 gpm @ 1,420 ft H_2O)	2	2
13	Slag Storage Bin	Vertical, field erected	800 tonne (900 tons)	2	0
14	Unloading Equipment	Telescoping chute	100 tonne/hr (110 tph)	1	0

Case B1B – Account 11: Accessory Electric Plant

Equipment No.	Description	Type	Design Condition	Operating Qty.	Spares
1	CTG Transformer	Oil-filled	24 kV/345 kV, 260 MVA, 3-ph, 60 Hz	2	0
2	STG Transformer	Oil-filled	24 kV/345 kV, 230 MVA, 3-ph, 60 Hz	1	0
3	High Voltage Auxiliary Transformer	Oil-filled	345 kV/13.8 kV, 77 MVA, 3-ph, 60 Hz	2	0
4	Medium Voltage Transformer	Oil-filled	24 kV/4.16 kV, 40 MVA, 3-ph, 60 Hz	1	1
5	Low Voltage Transformer	Dry ventilated	4.16 kV/480 V, 6 MVA, 3-ph, 60 Hz	1	1
6	CTG Isolated Phase Bus Duct and Tap Bus	Aluminum, self-cooled	24 kV, 3-ph, 60 Hz	2	0
7	STG Isolated Phase Bus Duct and Tap Bus	Aluminum, self-cooled	24 kV, 3-ph, 60 Hz	1	0
8	Medium Voltage Switchgear	Metal clad	4.16 kV, 3-ph, 60 Hz	1	1
9	Low Voltage Switchgear	Metal enclosed	480 V, 3-ph, 60 Hz	1	1
10	Emergency Diesel Generator	Sized for emergency shutdown	750 kW, 480 V, 3-ph, 60 Hz	1	0

Case B1B – Account 12: Instrumentation and Control

Equipment No.	Description	Type	Design Condition	Operating Qty.	Spares
1	DCS - Main Control	Monitor/keyboard; Operator printer (laser color); Engineering printer (laser B&W)	Operator stations/printers and engineering stations/printers	1	0
2	DCS - Processor	Microprocessor with redundant input/output	N/A	1	0
3	DCS - Data Highway	Fiber optic	Fully redundant, 25% spare	1	0

3.2.11 Case B1B – Cost Estimating

The cost estimating methodology was described previously in Section 2.7. Exhibit 3-51 shows a detailed breakdown of the capital costs; Exhibit 3-52 shows the owner's costs, TOC, and TASC; Exhibit 3-53 shows the initial and annual O&M costs; and Exhibit 3-54 shows the LCOE breakdown.

The estimated TPC of the Shell gasifier with CO_2 capture is $6,209/kW. Process contingency represents 5.9 percent of the TPC, and project contingency represents 14.9 percent. The LCOE, including CO_2 T&S costs of $8.6/MWh, is $175.0/MWh.

Exhibit 3-51. Case B1B total plant cost details

Case:		B1B	– Shell IGCC w/ CO_2				Estimate Type:			Conceptual	
Plant Size (MW, net):		519					Cost Base:			Dec 2018	
Item No.	Description	Equipment Cost	Material Cost	Labor		Bare Erected Cost	Eng'g CM H.O.& Fee	Contingencies		Total Plant Cost	
				Direct	Indirect			Process	Project	$/1,000	$/kW
1						Coal Handling					
1.1	Coal Receive & Unload	$971	$0	$468	$0	$1,438	$216	$0	$331	$1,985	$4
1.2	Coal Stackout & Reclaim	$3,173	$0	$758	$0	$3,931	$590	$0	$904	$5,425	$10
1.3	Coal Conveyors & Yard Crush	$30,270	$0	$7,704	$0	$37,974	$5,696	$0	$8,734	$52,404	$101
1.4	Other Coal Handling	$4,715	$0	$1,061	$0	$5,776	$866	$0	$1,328	$7,970	$15
1.9	Coal & Sorbent Handling Foundations	$0	$85	$222	$0	$307	$46	$0	$71	$424	$1
	Subtotal	**$39,128**	**$85**	**$10,213**	**$0**	**$49,426**	**$7,414**	**$0**	**$11,368**	**$68,208**	**$131**
2						Coal Preparation & Feed					
2.1	Coal Crushing & Drying	$2,349	$142	$338	$0	$2,829	$424	$0	$651	$3,904	$8
2.2	Prepared Coal Storage & Feed	$7,217	$1,734	$1,115	$0	$10,066	$1,510	$0	$2,315	$13,891	$27
2.3	Dry Coal Injection System	$9,212	$106	$844	$0	$10,162	$1,524	$0	$2,337	$14,023	$27
2.4	Miscellaneous Coal Preparation & Feed	$713	$521	$1,534	$0	$2,768	$415	$0	$637	$3,819	$7
2.9	Coal & Sorbent Feed Foundation	$0	$1,734	$1,488	$0	$3,221	$483	$0	$741	$4,446	$9
	Subtotal	**$19,491**	**$4,237**	**$5,318**	**$0**	**$29,045**	**$4,357**	**$0**	**$6,680**	**$40,083**	**$77**
3						Feedwater & Miscellaneous BOP Systems					
3.1	Feedwater System	$1,740	$2,982	$1,491	$0	$6,213	$932	$0	$1,429	$8,573	$17
3.2	Water Makeup & Pretreating	$5,203	$520	$2,948	$0	$8,672	$1,301	$0	$2,992	$12,964	$25
3.3	Other Feedwater Subsystems	$899	$295	$280	$0	$1,474	$221	$0	$339	$2,034	$4
3.4	Service Water Systems	$1,555	$2,968	$9,612	$0	$14,135	$2,120	$0	$4,876	$21,131	$41
3.5	Other Boiler Plant Systems	$232	$84	$211	$0	$527	$79	$0	$121	$728	$1
3.6	Natural Gas Pipeline and Start-Up System	$7,197	$310	$232	$0	$7,739	$1,161	$0	$1,780	$10,679	$21
3.7	Waste Water Treatment Equipment	$7,333	$0	$4,494	$0	$11,828	$1,774	$0	$4,080	$17,682	$34
3.8	Vacuum Flash, Brine Concentrator, & Crystallizer	$25,033	$0	$15,508	$0	$40,540	$6,081	$0	$13,986	$60,608	$117
3.9	Miscellaneous Plant Equipment	$15,325	$2,010	$7,788	$0	$25,124	$3,769	$0	$8,668	$37,560	$72
	Subtotal	**$64,516**	**$9,169**	**$42,564**	**$0**	**$116,250**	**$17,437**	**$0**	**$38,272**	**$171,959**	**$331**
4						Gasifier, ASU, and Accessories					
4.1	Gasifier & Auxiliaries (Shell)	$604,150	$0	$259,074	$0	$863,224	$129,484	$120,851	$167,034	$1,280,593	$2,466
4.2	Syngas Cooler	$61,109	$0	$26,205	$0	$87,314	$13,097	$12,224	$16,895	$129,530	$249
4.3	Air Separation Unit/Oxidant Compression	$54,953	$0	$20,878	$0	$75,831	$11,375	$0	$13,081	$100,286	$193
4.5	Miscellaneous Gasification Equipment	$4,180	$0	$1,792	$0	$5,972	$896	$0	$1,030	$7,898	$15
4.6	Low Temperature Heat Recovery & Flue Gas Saturation	$44,687	$0	$16,977	$0	$61,664	$9,250	$0	$14,183	$85,096	$164
4.7	Flare Stack System	$1,901	$0	$335	$0	$2,236	$335	$0	$514	$3,086	$6
4.15	Major Component Rigging	$233	$0	$100	$0	$332	$50	$0	$57	$439	$1
4.16	Gasification Foundations	$0	$470	$280	$0	$751	$113	$0	$216	$1,079	$2

Case:		B1B	– Shell IGCC w/ CO_2				Estimate Type:			Conceptual	
Plant Size (MW, net):		519					Cost Base:			Dec 2018	
Item No.	Description	Equipment Cost	Material Cost	Labor		Bare Erected Cost	Eng'g CM H.O.& Fee	Contingencies		Total Plant Cost	
				Direct	Indirect			Process	Project	$/1,000	$/kW
	Subtotal	**$771,212**	**$470**	**$325,642**	**$0**	**$1,097,323**	**$164,599**	**$133,075**	**$213,010**	**$1,608,007**	**$3,096**
5						Syngas Cleanup					
5.1	Double Stage Selexol	$169,382	$0	$69,184	$0	$238,567	$35,785	$47,713	$64,413	$386,478	$744
5.2	Sulfur Removal	w/5.1	w/5.1	w/5.1	$0	$0	$0	$0	$0	$0	$0
5.3	Elemental Sulfur Plant	$47,647	$9,288	$61,050	$0	$117,985	$17,698	$0	$27,137	$162,819	$313
5.4	Carbon Dioxide (CO_2) Compression & Drying	$31,944	$4,792	$13,412	$0	$50,148	$7,522	$0	$11,534	$69,204	$133
5.5	Carbon Dioxide (CO_2) Compressor Aftercooler	$473	$75	$203	$0	$750	$113	$0	$173	$1,035	$2
5.6	Mercury Removal (Carbon Bed)	$527	$0	$398	$0	$925	$139	$46	$222	$1,332	$3
5.7	Water Gas Shift (WGS) Reactors	$97,500	$0	$38,978	$0	$136,477	$20,472	$0	$31,390	$188,339	$363
5.9	Particulate Removal	$1,842	$0	$790	$0	$2,631	$395	$0	$454	$3,480	$7
5.10	Blowback Gas Systems	$838	$471	$263	$0	$1,571	$236	$0	$361	$2,168	$4
5.11	Fuel Gas Piping	$0	$1,169	$765	$0	$1,934	$290	$0	$445	$2,669	$5
5.12	Gas Cleanup Foundations	$0	$221	$149	$0	$371	$56	$0	$128	$554	$1
	Subtotal	**$350,152**	**$16,015**	**$185,192**	**$0**	**$551,360**	**$82,704**	**$47,760**	**$136,256**	**$818,079**	**$1,575**
6						Combustion Turbine & Accessories					
6.1	Combustion Turbine Generator	$77,280	$0	$4,703	$0	$81,983	$12,297	$8,198	$15,372	$117,850	$227
6.3	Combustion Turbine Accessories	$2,687	$0	$164	$0	$2,851	$428	$0	$492	$3,770	$7
6.4	Compressed Air Piping	$0	$509	$334	$0	$843	$126	$0	$194	$1,163	$2
6.5	Combustion Turbine Foundations	$0	$216	$250	$0	$466	$70	$0	$161	$697	$1
	Subtotal	**$79,967**	**$725**	**$5,450**	**$0**	**$86,143**	**$12,921**	**$8,198**	**$16,218**	**$123,480**	**$238**
7						HRSG, Ductwork, & Stack					
7.1	Heat Recovery Steam Generator	$32,381	$0	$8,095	$0	$40,476	$6,071	$0	$6,982	$53,530	$103
7.2	Heat Recovery Steam Generator Accessories	$12,107	$0	$2,345	$0	$14,452	$2,168	$0	$2,493	$19,113	$37
7.3	Ductwork	$0	$1,083	$759	$0	$1,842	$276	$0	$424	$2,543	$5
7.4	Stack	$9,213	$0	$3,437	$0	$12,650	$1,897	$0	$2,182	$16,729	$32
7.5	Heat Recovery Steam Generator, Ductwork & Stack Foundations	$0	$229	$230	$0	$460	$69	$0	$159	$687	$1
	Subtotal	**$53,701**	**$1,312**	**$14,867**	**$0**	**$69,881**	**$10,482**	**$0**	**$12,240**	**$92,602**	**$178**
8						Steam Turbine & Accessories					
8.1	Steam Turbine Generator & Accessories	$33,578	$0	$4,563	$0	$38,141	$5,721	$0	$6,579	$50,442	$97
8.2	Steam Turbine Plant Auxiliaries	$1,604	$0	$3,651	$0	$5,254	$788	$0	$906	$6,949	$13
8.3	Condenser & Auxiliaries	$6,525	$0	$3,666	$0	$10,191	$1,529	$0	$1,758	$13,478	$26
8.4	Steam Piping	$5,837	$0	$2,531	$0	$8,369	$1,255	$0	$2,406	$12,030	$23
8.5	Turbine Generator Foundations	$0	$249	$440	$0	$690	$103	$0	$238	$1,031	$2
	Subtotal	**$47,543**	**$249**	**$14,852**	**$0**	**$62,645**	**$9,397**	**$0**	**$11,888**	**$83,929**	**$162**
9						Cooling Water System					
9.1	Cooling Towers	$11,675	$0	$3,532	$0	$15,208	$2,281	$0	$2,623	$20,112	$39

Case:		B1B	– Shell IGCC w/ CO_2				Estimate Type:			Conceptual	
Plant Size (MW, net):		519					Cost Base:			Dec 2018	
Item No.	Description	Equipment Cost	Material Cost	Labor		Bare Erected Cost	Eng'g CM H.O.& Fee	Contingencies		Total Plant Cost	
				Direct	Indirect			Process	Project	$/1,000	$/kW
9.2	Circulating Water Pumps	$1,519	$0	$112	$0	$1,631	$245	$0	$281	$2,157	$4
9.3	Circulating Water System Auxiliaries	$10,496	$0	$1,491	$0	$11,987	$1,798	$0	$2,068	$15,853	$31
9.4	Circulating Water Piping	$0	$5,880	$5,325	$0	$11,206	$1,681	$0	$2,577	$15,464	$30
9.5	Make-up Water System	$622	$0	$855	$0	$1,477	$222	$0	$340	$2,039	$4
9.6	Component Cooling Water System	$213	$255	$175	$0	$643	$96	$0	$148	$887	$2
9.7	Circulating Water System Foundations	$0	$486	$863	$0	$1,348	$202	$0	$465	$2,016	$4
	Subtotal	**$24,526**	**$6,621**	**$12,354**	**$0**	**$43,500**	**$6,525**	**$0**	**$8,503**	**$58,528**	**$113**
10						Slag Recovery & Handling					
10.1	Slag Dewatering & Cooling	$1,934	$0	$947	$0	$2,881	$432	$0	$497	$3,810	$7
10.2	Gasifier Ash Depressurization	$1,096	$0	$537	$0	$1,632	$245	$0	$282	$2,158	$4
10.3	Cleanup Ash Depressurization	$492	$0	$241	$0	$734	$110	$0	$127	$970	$2
10.6	Ash Storage Silos	$1,104	$0	$1,193	$0	$2,297	$345	$0	$396	$3,038	$6
10.7	Ash Transport & Feed Equipment	$425	$0	$99	$0	$524	$79	$0	$90	$693	$1
10.8	Miscellaneous Ash Handling Equipment	$61	$75	$22	$0	$158	$24	$0	$27	$209	$0
10.9	Ash/Spent Sorbent Foundation	$0	$431	$573	$0	$1,004	$151	$0	$346	$1,501	$3
	Subtotal	**$5,112**	**$506**	**$3,612**	**$0**	**$9,230**	**$1,384**	**$0**	**$1,765**	**$12,380**	**$24**
11						Accessory Electric Plant					
11.1	Generator Equipment	$2,470	$0	$1,863	$0	$4,334	$650	$0	$748	$5,731	$11
11.2	Station Service Equipment	$4,161	$0	$357	$0	$4,518	$678	$0	$779	$5,975	$12
11.3	Switchgear & Motor Control	$25,109	$0	$4,356	$0	$29,465	$4,420	$0	$5,083	$38,967	$75
11.4	Conduit & Cable Tray	$0	$111	$321	$0	$432	$65	$0	$124	$621	$1
11.5	Wire & Cable	$0	$1,523	$2,723	$0	$4,246	$637	$0	$1,221	$6,104	$12
11.6	Protective Equipment	$241	$0	$837	$0	$1,078	$162	$0	$186	$1,426	$3
11.7	Standby Equipment	$826	$0	$763	$0	$1,589	$238	$0	$274	$2,102	$4
11.8	Main Power Transformers	$6,143	$0	$125	$0	$6,268	$940	$0	$1,081	$8,290	$16
11.9	Electrical Foundations	$0	$71	$180	$0	$251	$38	$0	$87	$376	$1
	Subtotal	**$38,950**	**$1,706**	**$11,526**	**$0**	**$52,181**	**$7,827**	**$0**	**$9,583**	**$69,591**	**$134**
12						Instrumentation & Control					
12.1	Integrated Gasification and Combined Cycle Control Equipment	$692	$0	$297	$0	$989	$148	$0	$171	$1,308	$3
12.2	Combustion Turbine Control Equipment	$683	$0	$48	$0	$731	$110	$0	$126	$967	$2
12.3	Steam Turbine Control Equipment	$640	$0	$87	$0	$727	$109	$0	$125	$961	$2
12.4	Other Major Component Control Equipment	$1,218	$0	$830	$0	$2,047	$307	$102	$369	$2,825	$5
12.5	Signal Processing Equipment	$945	$0	$31	$0	$976	$146	$0	$168	$1,291	$2
12.6	Control Boards, Panels & Racks	$274	$0	$180	$0	$454	$68	$23	$109	$653	$1
12.7	Distributed Control System Equipment	$9,918	$0	$324	$0	$10,242	$1,536	$512	$1,844	$14,134	$27
12.8	Instrument Wiring & Tubing	$493	$395	$1,579	$0	$2,467	$370	$123	$740	$3,701	$7

Case:		B1B	– Shell IGCC w/ CO_2				Estimate Type:			Conceptual	
Plant Size (MW, net):		519					Cost Base:			Dec 2018	
Item No.	Description	Equipment Cost	Material Cost	Labor		Bare Erected Cost	Eng'g CM H.O.& Fee	Contingencies		Total Plant Cost	
				Direct	Indirect			Process	Project	$/1,000	$/kW
12.9	Other Instrumentation & Controls Equipment	$1,107	$0	$548	$0	$1,655	$248	$83	$298	$2,284	$4
	Subtotal	**$15,970**	**$395**	**$3,924**	**$0**	**$20,289**	**$3,043**	**$843**	**$3,950**	**$28,125**	**$54**
13						Improvements to Site					
13.1	Site Preparation	$0	$426	$9,707	$0	$10,133	$1,520	$0	$3,496	$15,149	$29
13.2	Site Improvements	$0	$1,928	$2,726	$0	$4,654	$698	$0	$1,606	$6,958	$13
13.3	Site Facilities	$3,010	$0	$3,380	$0	$6,390	$959	$0	$2,205	$9,553	$18
	Subtotal	**$3,010**	**$2,355**	**$15,812**	**$0**	**$21,177**	**$3,177**	**$0**	**$7,306**	**$31,660**	**$61**
14						Buildings & Structures					
14.1	Combustion Turbine Area	$0	$314	$177	$0	$491	$74	$0	$85	$649	$1
14.3	Steam Turbine Building	$0	$2,739	$3,900	$0	$6,639	$996	$0	$1,145	$8,780	$17
14.4	Administration Building	$0	$878	$637	$0	$1,514	$227	$0	$261	$2,003	$4
14.5	Circulation Water Pumphouse	$0	$144	$76	$0	$221	$33	$0	$38	$292	$1
14.6	Water Treatment Buildings	$0	$348	$339	$0	$687	$103	$0	$118	$908	$2
14.7	Machine Shop	$0	$486	$333	$0	$818	$123	$0	$141	$1,082	$2
14.8	Warehouse	$0	$378	$244	$0	$622	$93	$0	$107	$823	$2
14.9	Other Buildings & Structures	$0	$277	$216	$0	$493	$74	$0	$85	$652	$1
14.10	Waste Treating Building & Structures	$0	$761	$1,453	$0	$2,214	$332	$0	$382	$2,928	$6
	Subtotal	**$0**	**$6,325**	**$7,375**	**$0**	**$13,700**	**$2,055**	**$0**	**$2,363**	**$18,118**	**$35**
	Total	**$1,513,278**	**$50,170**	**$658,701**	**$0**	**$2,222,150**	**$333,322**	**$189,876**	**$479,401**	**$3,224,750**	**$6,209**

Exhibit 3-52. Case B1B owner's costs

Description	$/1,000	$/kW
Pre-Production Costs		
6 Months All Labor	$25,821	$50
1 Month Maintenance Materials	$6,550	$13
1 Month Non-Fuel Consumables	$1,186	$2
1 Month Waste Disposal	$700	$1
25% of 1 Months Fuel Cost at 100% CF	$2,216	$4
2% of TPC	$64,495	$124
Total	**$100,968**	**$194**
Inventory Capital		
60-day supply of fuel and consumables at 100% CF	$19,674	$38
0.5% of TPC (spare parts)	$16,124	$31
Total	**$35,798**	**$69**
Other Costs		
Initial Cost for Catalyst and Chemicals	$30,371	$58
Land	$900	$2
Other Owner's Costs	$483,712	$931
Financing Costs	$87,068	$168
Total Overnight Costs (TOC)	**$3,963,567**	**$7,632**
TASC Multiplier (IOU, 35 year)	1.154	
Total As-Spent Cost (TASC)	**$4,575,589**	**$8,810**

Exhibit 3-53. Case B1B initial and annual operating and maintenance costs

Case:	B1B	– Shell IGCC w/ CO_2			Cost Base:	Dec 2018
Plant Size (MW, net):	519	Heat Rate-net (Btu/kWh):		10,497	Capacity Factor (%):	80
Operating & Maintenance Labor						
Operating Labor				**Operating Labor Requirements per Shift**		
Operating Labor Rate (base):		38.50	**$/hour**	Skilled Operator:		2.0
Operating Labor Burden:		30.00	**% of base**	Operator:		11.0
Labor O-H Charge Rate:		25.00	**% of labor**	Foreman:		1.0
				Lab Techs, etc.:		3.0
				Total:		**17.0**
Fixed Operating Costs						
					Annual Cost	
					($)	**($/kW-net)**
Annual Operating Labor:					$7,453,446	$14.351
Maintenance Labor:					$33,859,874	$65.195
Administrative & Support Labor:					$10,328,330	$19.887
Property Taxes and Insurance:					$64,494,998	$124.182
Total:					**$116,136,648**	**$223.615**
Variable Operating Costs						
					($)	**($/MWh-net)**
Maintenance Material:					$62,882,623	$17.27699
Consumables						
	Initial Fill	**Per Day**	**Per Unit**	**Initial Fill**		
Water (/1000 gallons):	0	3,657	$1.90	$0	$2,029,054	$0.55748
Makeup and Waste Water Treatment Chemicals (ton):	0	10.9	$550.00	$0	$1,749,656	$0.48072
Sulfur-Impregnated Activated Carbon (ton):	113	0.155	$12,000.00	$1,357,251	$542,901	$0.14916
Water Gas Shift (WGS) Catalyst (ft^3):	17,623	12.1	$480.00	$8,458,830	$1,691,766	$0.46481
Selexol Solution (gal):	540,913	53.6	$38.00	$20,554,696	$595,168	$0.16352
Sodium Hydroxide (50 wt%, ton):	0	19.3	$600.00	$0	$3,388,156	$0.93090
Sulfuric Acid (98 wt%, ton):	0	0.342	$210.00	$0	$20,988	$0.00577
Claus Catalyst (ft^3):	w/equip.	1.94	$48.00	$0	$27,237	$0.00748
Triethylene Glycol (gal):	w/equip.	675	$6.80	$0	$1,340,675	$0.36835
Subtotal:				**$30,370,777**	**$11,385,601**	**$3.12819**
Waste Disposal						
Sulfur-Impregnated Activated Carbon (ton):	0	0.155	$80.00	$0	$3,619	$0.00099
Water Gas Shift Catalyst (ft^3):	0	12.1	$2.50	$0	$8,811	$0.00242
Selexol Solution (gal):	0	53.6	$0.35	$0	$5,482	$0.00151
Claus Catalyst (ft^3):	0	1.94	$2.50	$0	$1,419	$0.00039
Crystallizer Solids (ton):	0	36.4	$38.00	$0	$404,191	$0.11105
Slag (ton):	0	562	$38.00	$0	$6,231,962	$1.71223
Triethylene Glycol (gal):	0	675	$0.35	$0	$69,005	$0.01896
Subtotal:				**$0**	**$6,724,489**	**$1.84755**
By-Products						
Sulfur (tons):	0	141	$0.00	$0	$0	$0.00000
Subtotal:				**$0**	**$0**	**$0.00000**
Variable Operating Costs Total:				**$30,370,777**	**$80,992,713**	**$22.25273**
Fuel Cost						
Illinois Number 6 (ton):	0	5,608	$51.96	$0	$85,078,513	$23.37531
Total:				**$0**	**$85,078,513**	**$23.37531**

Exhibit 3-54. Case B1B LCOE breakdown

Component	Value, $/MWh	Percentage
Capital	88.9	51%
Fixed	31.9	18%
Variable	22.3	13%
Fuel	23.4	13%
Total (Excluding T&S)	**166.5**	**N/A**
CO_2 T&S	8.6	5%
Total (Including T&S)	**175.0**	**N/A**

3.3 CB&I E-GAS™ IGCC CASES

This section contains an evaluation of plant designs for cases B4A and B4B, which are based on the CB&I E-Gas™ gasifier. Cases B4A and B4B are very similar in terms of process, equipment, scope and arrangement, except that Case B4B includes SGS reactors, CO_2 absorption/regeneration and compression/transport systems. There are no provisions for CO_2 removal in Case B4A.

The balance of this section is organized in an analogous manner to Section 3.2:

- Gasifier Background
- Process System Description for Case B4A
- Key Assumptions for Cases B4A and B4B
- Sparing Philosophy for Cases B4A and B4B
- Performance Results for Case B4A
- Equipment List for Case B4A
- Cost Estimates for Case B4A
- Process and System Description, Performance Results, Equipment List, and Cost Estimate for Case B4B

3.3.1 Gasifier Background

As mentioned in Section 3.2.1, the "Coal Gasification Guidebook: Status, Application, and Technologies" report published by EPRI provides a detailed history of the development of several types of gasifier technology, including the E-Gas™ gasifier, as well as gasifier capacity, distinguishing characteristics, and important coal characteristics. [95]

In January of 2000, an E-Gas™ demonstration facility was constructed at the Wabash River Generating Station in West Terre Haute, Indiana. [56]

The Wabash River plant was designed for a coal handling capacity of 1,678 tonnes/day (1,850 tpd)—on a moisture and ash-free (MAF) basis – for bituminous coal with a high sulfur content. The unit was designed to produce dry gas at a rate of 189,724 Nm^3/hr (6.7 million scf/hr) with an energy content of about 1,950 GJ/hr (1,850 MMBtu/hr) (HHV). This size matches the CT, which is a GEP 7FA. [95]

The E-Gas™ gasifier has significant operating experience with bituminous coal at full commercial scale via the Wabash plant. [95] The Wabash plant has also tested and incorporated the use of petcoke as another fuel source. [98]

Compared to a single stage slurry-fed gasifier, the E-Gas™ technology demonstrates superior efficiency and lower O_2 requirements. [95]

Notable characteristics of the E-Gas™ gasifier are the relatively short refractory life and the high waste heat recovery rate, resulting from the high operating temperature. The E-Gas™ gasifier produces a syngas with a higher CH_4 content than other single-stage slurry fed gasifiers, due to the use of quenching in the second stage. However, in CO_2 capture cases the CH_4 passes through the WGS reactors without change, and is also not separated by the AGR, thus limiting the amount of carbon that can be captured. [95]

Bituminous coals with low moisture content are desired for use with the E-Gas™ gasifier as it benefits the slurry concentration and lowers the O_2 requirement. As with all slagging gasifiers, low concentrations of ash with low to moderate ash fusion temperatures are preferred. [95]

3.3.2 Key System Assumptions

System assumptions for cases B4A and B4B, E-Gas™ IGCC with and without CO_2 capture, are compiled in Exhibit 3-55.

Exhibit 3-55. E-Gas™ IGCC plant study configuration matrix

Case	B4A	B4B
Gasifier Pressure, MPa (psia)	4.2 (615)	
O_2:Coal Ratio, kg O_2/kg As-Received coal	0.683	0.738
Carbon Conversion, %	99.2	
Syngas HHV at Gasifier Outlet, kJ/Nm^3 (Btu/scf)[A]	8,942 (240)	7,675 (206)
Steam Cycle, MPa/°C/°C (psig/°F/°F)	12.4/566/566 (1,800/1,051/1,051)	12.4/535/535 (1,800/996/996)
Condenser Pressure, mm Hg (in. Hg)	51 (2.0)	
CT	2x State-of-the-Art 2008 F-Class (232 MW output each)	
Gasifier Technology	CB&I E-Gas™	
Oxidant	95 vol% O_2	
Coal	Illinois No. 6	
Coal Slurry Solids Content, %	63	
COS Hydrolysis	Yes	Occurs in WGS
WGS	No	Yes
H_2S Separation	Refrigerated MDEA	Selexol 1st Stage
Sulfur Removal, %	99.4	~100.0
Sulfur Recovery	Claus Plant with Tail Gas Recycle to Gasifier/Elemental Sulfur	
Particulate Control	Cyclone, Candle Filter, Scrubber, and AGR Absorber	
Chloride Control	Venturi Scrubber, Vacuum Flash, Brine Concentrator, Crystallizer	
Mercury Control	Carbon Bed	
NOx Control	MNQC (LNB), N_2 Dilution	
CO_2 Separation	N/A	Selexol 2nd Stage
Overall Carbon Capture	N/A	89.9%
CO_2 Sequestration	N/A	Off-site Saline Formation

[A]Syngas measurement is reflected post-syngas recycle. The gasifier operating condition is different between the capture (B4B) and non-capture (B4A) cases. Due to the higher amount of methane produced by the E-Gas™ gasifier, the capture case (B4B) must operate at a higher O_2:coal ratio to achieve 90 percent overall carbon capture. Three stages of WGS are also required in case B4B to achieve the capture target.

3.3.2.1 Balance of Plant – Case B4A and Case B4B

The balance of plant assumptions are common to both cases and were presented previously in Exhibit 3-22.

3.3.3 Sparing Philosophy

The sparing philosophy for cases B4A and B4B is provided below. Dual trains are used to accommodate the size of commercial CTs. There is no redundancy other than normal sparing of rotating equipment. The plant design consists of the following major subsystems:

- Two ASUs (2 x 50 percent)
- Two trains of slurry preparation and slurry pumps (2 x 50 percent)
- Two trains of gasification, including gasifier, SGC, cyclone, and candle filter (2 x 50 percent)
- Two trains of syngas clean-up process (2 x 50 percent)
- Two trains of refrigerated MDEA AGR in Case B4A and two-stage Selexol in Case B4B (2 x 50 percent)
- Two trains of CO_2 compression systems (2 x 50 percent) in Case B4B
- Two trains of process water treatment systems (2 x 50 percent)
- One train of Claus-based sulfur recovery (1 x 100 percent)
- Two CT/HRSG tandems (2 x 50 percent)
- One steam turbine (1 x 100 percent)

3.3.4 Case B4A – E-Gas™ IGCC Power Plant Without CO_2 Capture Process Description

In this section, the E-Gas™ gasification process for Case B4A is described. The system descriptions follow the BFD provided in Exhibit 3-56 with the associated stream tables—providing process data for the numbered streams in the BFD—provided in Exhibit 3-57.

3.3.4.1 Coal Preparation and Feed Systems

Coal receiving and handling is common to all cases and was covered in Section 3.1.1. The receiving and handling subsystem ends at the coal silo. Coal is then fed onto a conveyor by vibratory feeders located below each silo. The conveyor feeds the coal to an inclined conveyor that delivers the coal to the rod mill feed hopper. The feed hopper provides a surge capacity of about two hours and contains two hopper outlets. Each hopper outlet discharges onto a weigh feeder, which, in turn, feeds a rod mill. Each rod mill is sized to process 55 percent of the coal feed requirements of the gasifier. The rod mill grinds the coal (stream 8) and wets it with process and slag recovery water (stream 7) transferred from the slurry water tank by the slurry water pumps. The coal slurry is discharged through a trommel screen into the rod mill discharge tank, and then the slurry is pumped to the slurry storage tanks. The dry solids

concentration of the final slurry is 63 percent. The Polk Power Station operates at a slurry concentration of 62–68 percent using bituminous coal, and ConocoPhillips presented a paper showing the slurry concentration of Illinois No. 6 coal as 63 percent. [99]

The coal grinding system is equipped with a dust suppression system consisting of water sprays aided by a wetting agent. The degree of dust suppression required depends on local environmental regulations. All of the tanks are equipped with vertical agitators to keep the coal slurry solids suspended.

The equipment in the coal grinding and slurry preparation system is fabricated of materials appropriate for the abrasive environment present in the system. The tanks and agitators are rubber lined. The pumps are either rubber-lined or hardened metal to minimize erosion. Piping is fabricated of high-density polyethylene (HDPE).

3.3.4.2 Gasifier

There are two E-Gas™ slurry fed, pressurized, upflow, entrained, slagging gasifiers, operating at 4.2 MPa (615 psia) and processing a total of 4,968 tonnes/day (5,476 tpd) of as-received coal.

The first (bottom) stage of the gasifier is best described as a horizontal cylinder with two horizontally opposed burners where the highly exothermic gasification/oxidation reactions take place rapidly at temperatures between 1,316 and 1,427°C (2,400 and 2,600°F). The ASU supplies 3,597 tonnes/day (3,965 tpd) of 95 percent O_2 (stream 4) to the first stage of the gasifier, along with about 78 percent of the total slurry feed.

The hot raw gas from the first stage of the gasifier enters the second (top) stage, which is a vertical cylinder, perpendicular to the first stage. The remaining 22 percent of the coal slurry is injected into this hot raw gas. The endothermic gasification/devolatilization reaction in this stage reduces the gasifier exit temperature to 1,038°C (1,900°F).

The coal ash is converted to molten slag, which flows down through a tap hole. The molten slag is quenched in water and removed through a proprietary continuous-pressure letdown/dewatering system (stream 9). Char is produced in the second gasifier stage and is captured and recycled to the hotter first stage to be gasified.

The syngas produced by the E-Gas™ gasifier is higher in methane content than either the GEP or Shell gasifier. The two-stage design allows for improved cold gas efficiency (CGE) and lower O_2 consumption, but the quenched second stage produces CH_4. The syngas CH_4 concentration exiting the gasifier in Case B4A is 4.4 vol% (compared to 0.11 vol% in Case B5A [GEP] and 0.04 vol% in Case B1A [Shell]). The relatively high CH_4 concentration impacts carbon capture efficiency as discussed in Section 3.3.8.

Exhibit 3-56. Case B4A block flow diagram, E-Gas™ IGCC without CO_2 capture

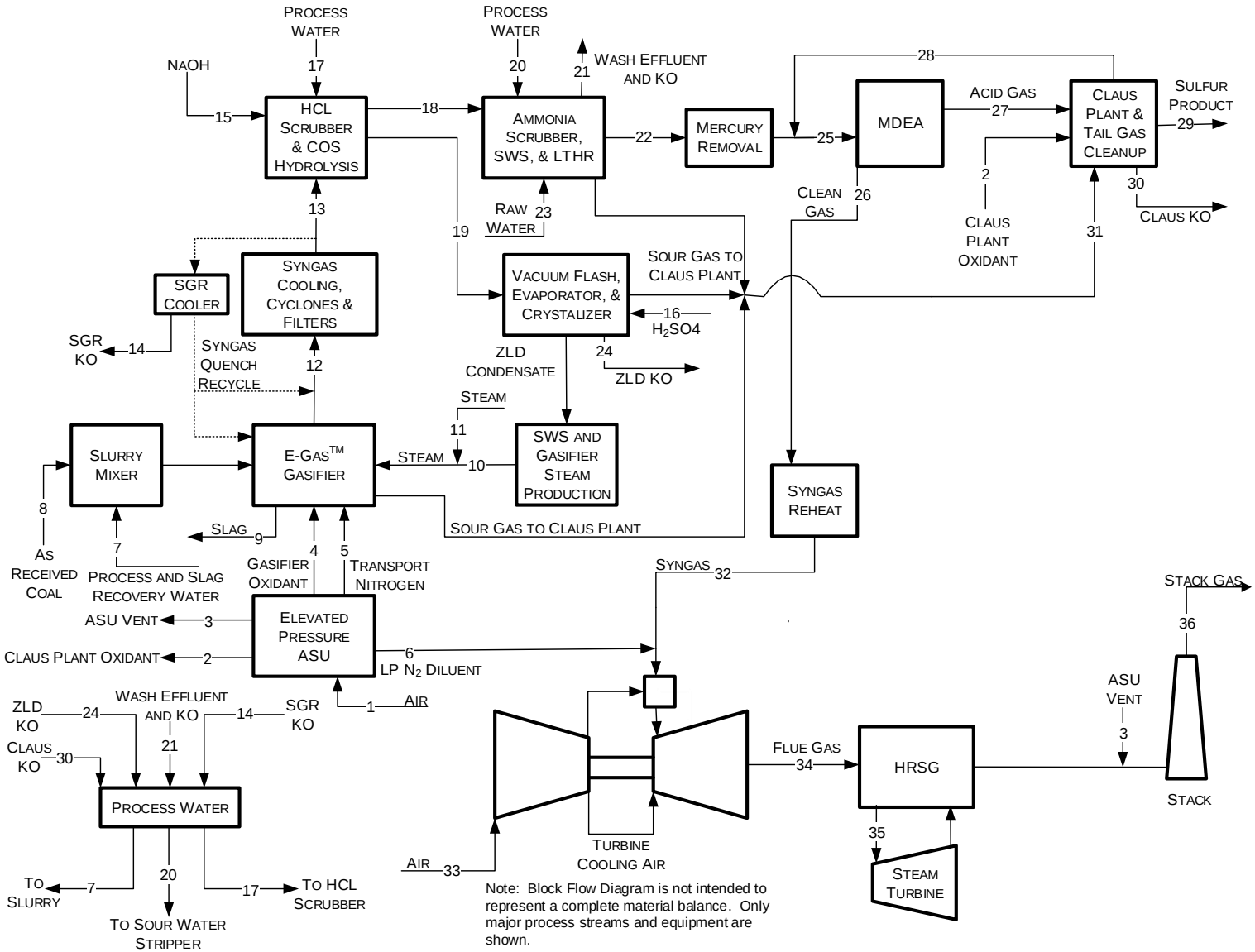

Note: Block Flow Diagram is not intended to represent a complete material balance. Only major process streams and equipment are shown.

Exhibit 3-57. Case B4A stream table, E-Gas™ IGCC without capture

	1	2	3	4	5	6	7	8	9	10	11	12
V-L Mole Fraction												
Ar	0.0092	0.0343	0.0132	0.0343	0.0000	0.0000	0.0000	0.0000	0.0000	0.0000	0.0000	0.0070
CH_4	0.0000	0.0000	0.0000	0.0000	0.0000	0.0000	0.0000	0.0000	0.0000	0.0000	0.0000	0.0440
CO	0.0000	0.0000	0.0000	0.0000	0.0000	0.0000	0.0000	0.0000	0.0000	0.0000	0.0000	0.2852
CO_2	0.0003	0.0000	0.0023	0.0000	0.0000	0.0000	0.0005	0.0000	0.0000	0.0000	0.0000	0.1479
COS	0.0000	0.0000	0.0000	0.0000	0.0000	0.0000	0.0000	0.0000	0.0000	0.0000	0.0000	0.0003
H_2	0.0000	0.0000	0.0000	0.0000	0.0000	0.0000	0.0000	0.0000	0.0000	0.0000	0.0000	0.2588
H_2O	0.0099	0.0000	0.0480	0.0000	0.0000	0.0000	0.9831	0.0000	0.0000	0.9998	1.0000	0.2297
HCl	0.0000	0.0000	0.0000	0.0000	0.0000	0.0000	0.0000	0.0000	0.0000	0.0000	0.0000	0.0004
H_2S	0.0000	0.0000	0.0000	0.0000	0.0000	0.0000	0.0002	0.0000	0.0000	0.0000	0.0000	0.0068
N_2	0.7732	0.0157	0.9331	0.0157	0.9964	0.9964	0.0000	0.0000	0.0000	0.0000	0.0000	0.0156
NH_3	0.0000	0.0000	0.0000	0.0000	0.0000	0.0000	0.0160	0.0000	0.0000	0.0002	0.0000	0.0044
O_2	0.2074	0.9501	0.0034	0.9501	0.0036	0.0036	0.0000	0.0000	0.0000	0.0000	0.0000	0.0000
SO_2	0.0000	0.0000	0.0000	0.0000	0.0000	0.0000	0.0000	0.0000	0.0000	0.0000	0.0000	0.0000
NaCl	0.0000	0.0000	0.0000	0.0000	0.0000	0.0000	0.0000	0.0000	0.0000	0.0000	0.0000	0.0000
NaOH	0.0000	0.0000	0.0000	0.0000	0.0000	0.0000	0.0000	0.0000	0.0000	0.0000	0.0000	0.0000
Total	1.0000	1.0000	1.0000	1.0000	1.0000	1.0000	0.9998	0.0000	0.0000	1.0000	1.0000	1.0000
V-L Flowrate (kg_{mol}/hr)	22,012	88	3,098	4,653	209	13,895	4,718	0	0	2,794	930	26,695
V-L Flowrate (kg/hr)	635,191	2,846	85,940	149,864	5,856	389,448	85,030	0	0	50,325	16,759	558,353
Solids Flowrate (kg/hr)	0	0	0	0	0	0	0	206,986	21,127	0	0	0
Temperature (°C)	15	27	22	27	129	196	148	15	1,038	343	343	1,001
Pressure (MPa, abs)	0.10	0.86	0.45	5.10	5.41	2.69	5.79	0.10	4.24	5.10	5.10	4.24
Steam Table Enthalpy (kJ/kg)[A]	30.23	21.53	27.71	9.82	127.56	202.61	591.59	---	---	3,083.36	3,093.81	2,257.20
AspenPlus Enthalpy (kJ/kg)[B]	-97.58	-0.97	-527.56	-12.68	101.59	176.64	-15,156.08	-2,119.02	1,005.43	-12,884.30	-12,886.48	-5,397.05
Density (kg/m^3)	1.2	11.2	5.3	68.6	44.9	19.2	882.1	---	---	19.9	19.9	8.3
V-L Molecular Weight	28.857	32.209	27.742	32.209	28.028	28.028	18.023	---	---	18.015	18.015	20.916
V-L Flowrate (lb_{mol}/hr)	48,528	195	6,829	10,258	461	30,633	10,401	0	0	6,159	2,051	58,853
V-L Flowrate (lb/hr)	1,400,356	6,275	189,465	330,393	12,909	858,586	187,459	0	0	110,948	36,948	1,230,958
Solids Flowrate (lb/hr)	0	0	0	0	0	0	0	456,327	46,576	0	0	0
Temperature (°F)	59	80	71	80	263	385	298	59	1,900	650	650	1,834
Pressure (psia)	14.7	125.0	65.0	740.0	785.0	390.0	840.0	14.7	615.0	740.0	740.0	615.0
Steam Table Enthalpy (Btu/lb)[A]	13.0	9.3	11.9	4.2	54.8	87.1	254.3	---	---	1,325.6	1,330.1	970.4
AspenPlus Enthalpy (Btu/lb)[B]	-42.0	-0.4	-226.8	-5.5	43.7	75.9	-6,515.9	-911.0	432.3	-5,539.3	-5,540.2	-2,320.3
Density (lb/ft^3)	0.076	0.700	0.332	4.283	2.802	1.196	55.070	---	---	1.240	1.240	0.518

[A]Steam table reference conditions are 32.02°F & 0.089 psia

[B]Aspen thermodynamic reference state is the component's constituent elements in an ideal gas state at 25°C and 1 atm

Exhibit 3-57. Case B4A stream table, E-Gas™ IGCC without capture (continued)

	13	14	15	16	17	18	19	20	21	22	23	24
V-L Mole Fraction												
Ar	0.0070	0.0000	0.0000	0.0000	0.0000	0.0069	0.0000	0.0000	0.0000	0.0091	0.0000	0.0000
CH_4	0.0440	0.0000	0.0000	0.0000	0.0000	0.0437	0.0000	0.0000	0.0000	0.0575	0.0000	0.0000
CO	0.2852	0.0002	0.0000	0.0000	0.0000	0.2828	0.0001	0.0000	0.0000	0.3723	0.0000	0.0000
CO_2	0.1479	0.0027	0.0000	0.0000	0.0007	0.1468	0.0009	0.0007	0.0007	0.1924	0.0000	0.0009
COS	0.0003	0.0000	0.0000	0.0000	0.0000	0.0000	0.0000	0.0000	0.0000	0.0000	0.0000	0.0000
H_2	0.2588	0.0002	0.0000	0.0000	0.0000	0.2565	0.0001	0.0000	0.0000	0.3378	0.0000	0.0000
H_2O	0.2297	0.9793	0.6895	0.1000	0.9828	0.2344	0.9930	0.9828	0.9825	0.0015	0.9999	0.9837
HCl	0.0004	0.0015	0.0000	0.0000	0.0000	0.0000	0.0000	0.0000	0.0000	0.0000	0.0000	0.0000
H_2S	0.0068	0.0004	0.0000	0.0000	0.0002	0.0070	0.0001	0.0002	0.0002	0.0091	0.0000	0.0002
N_2	0.0156	0.0000	0.0000	0.0000	0.0000	0.0154	0.0000	0.0000	0.0000	0.0203	0.0000	0.0000
NH_3	0.0044	0.0156	0.0000	0.0000	0.0160	0.0064	0.0031	0.0160	0.0164	0.0000	0.0000	0.0152
O_2	0.0000	0.0000	0.0000	0.0000	0.0000	0.0000	0.0000	0.0000	0.0000	0.0000	0.0000	0.0000
SO_2	0.0000	0.0000	0.0000	0.0000	0.0000	0.0000	0.0000	0.0000	0.0000	0.0000	0.0000	0.0000
NaCl	0.0000	0.0000	0.0000	0.0000	0.0000	0.0000	0.0026	0.0000	0.0000	0.0000	0.0001	0.0000
NaOH	0.0000	0.0000	0.3105	0.0000	0.0000	0.0000	0.0001	0.0000	0.0000	0.0000	0.0000	0.0000
Total	1.0000	1.0000	1.0000	0.1000	0.9998	1.0000	1.0000	0.9998	0.9998	1.0000	1.0000	1.0000
V-L Flowrate (kg_{mol}/hr)	22,825	900	29	0	3,573	23,023	3,405	2,171	9,715	17,482	1,169	564
V-L Flowrate (kg/hr)	477,389	16,302	714	13	64,422	480,757	61,768	39,139	175,141	380,595	21,071	10,161
Solids Flowrate (kg/hr)	0	0	0	0	0	0	0	0	0	0	0	0
Temperature (°C)	232	41	16	15	75	186	173	75	79	29	15	30
Pressure (MPa, abs)	3.93	3.90	4.76	0.13	0.47	3.70	3.83	0.47	0.45	3.37	0.10	0.24
Steam Table Enthalpy (kJ/kg)[A]	843.62	132.07	-338.83	-8,206.86	278.39	777.17	717.27	278.39	292.31	33.20	62.75	92.47
AspenPlus Enthalpy (kJ/kg)[B]	-6,810.64	-15,541.22	-13,665.04	-8,526.27	-15,464.46	-6,921.42	-15,118.98	-15,464.46	-15,445.31	-5,594.89	-15,905.25	-15,665.91
Density (kg/m^3)	19.7	982.7	1,531.7	1,791.5	961.1	20.6	891.5	961.1	958.3	29.7	999.4	986.3
V-L Molecular Weight	20.916	18.104	24.842	90.073	18.028	20.882	18.141	18.028	18.028	21.771	18.019	18.028
V-L Flowrate (lb_{mol}/hr)	50,320	1,985	63	0	7,878	50,756	7,506	4,786	21,417	38,541	2,578	1,243
V-L Flowrate (lb/hr)	1,052,463	35,939	1,574	28	142,026	1,059,888	136,175	86,287	386,120	839,069	46,453	22,401
Solids Flowrate (lb/hr)	0	0	0	0	0	0	0	0	0	0	0	0
Temperature (°F)	450	105	61	59	167	366	343	167	174	84	59	85
Pressure (psia)	570.2	566.2	690.2	18.2	67.7	537.1	555.3	67.7	65.0	489.0	14.7	35.0
Steam Table Enthalpy (Btu/lb)[A]	362.7	56.8	-145.7	-3,528.3	119.7	334.1	308.4	119.7	125.7	14.3	27.0	39.8
AspenPlus Enthalpy (Btu/lb)[B]	-2,928.0	-6,681.5	-5,874.9	-3,665.6	-6,648.5	-2,975.7	-6,500.0	-6,648.5	-6,640.3	-2,405.4	-6,838.0	-6,735.1
Density (lb/ft^3)	1.231	61.346	95.621	111.841	60.001	1.285	55.657	60.001	59.823	1.853	62.391	61.572

[A]Steam table reference conditions are 32.02°F & 0.089 psia

[B]Aspen thermodynamic reference state is the component's constituent elements in an ideal gas state at 25°C and 1 atm

Exhibit 3-57. Case B4A stream table, E-Gas™ IGCC without capture (continued)

	25	26	27	28	29	30	31	32	33	34	35	36
V-L Mole Fraction												
Ar	0.0090	0.0093	0.0000	0.0048	0.0000	0.0000	0.0007	0.0093	0.0092	0.0087	0.0000	0.0088
CH_4	0.0554	0.0576	0.0010	0.0000	0.0000	0.0000	0.0044	0.0576	0.0000	0.0000	0.0000	0.0000
CO	0.3592	0.3736	0.0049	0.0056	0.0000	0.0000	0.0235	0.3736	0.0000	0.0000	0.0000	0.0000
CO_2	0.2163	0.1942	0.7597	0.8603	0.0000	0.0000	0.2129	0.1942	0.0003	0.0808	0.0000	0.0790
COS	0.0000	0.0000	0.0000	0.0000	0.0000	0.0000	0.0000	0.0000	0.0000	0.0000	0.0000	0.0000
H_2	0.3290	0.3421	0.0042	0.0921	0.0000	0.0000	0.0249	0.3421	0.0000	0.0000	0.0000	0.0000
H_2O	0.0015	0.0015	0.0014	0.0024	0.0000	0.9999	0.2697	0.0015	0.0099	0.0671	1.0000	0.0667
HCl	0.0000	0.0000	0.0000	0.0000	0.0000	0.0000	0.0000	0.0000	0.0000	0.0000	0.0000	0.0000
H_2S	0.0089	0.0000	0.2283	0.0037	0.0000	0.0000	0.0223	0.0000	0.0000	0.0000	0.0000	0.0000
N_2	0.0207	0.0215	0.0002	0.0311	0.0000	0.0000	0.0009	0.0215	0.7732	0.7349	0.0000	0.7394
NH_3	0.0000	0.0000	0.0002	0.0000	0.0000	0.0000	0.4405	0.0000	0.0000	0.0000	0.0000	0.0000
O_2	0.0000	0.0000	0.0000	0.0000	0.0000	0.0000	0.0000	0.0000	0.2074	0.1084	0.0000	0.1061
SO_2	0.0000	0.0000	0.0000	0.0000	0.0000	0.0000	0.0000	0.0000	0.0000	0.0000	0.0000	0.0000
NaCl	0.0000	0.0000	0.0000	0.0000	0.0000	0.0000	0.0000	0.0000	0.0000	0.0000	0.0000	0.0000
NaOH	0.0000	0.0000	0.0000	0.0000	0.0000	0.0000	0.0000	0.0000	0.0000	0.0000	0.0000	0.0000
Total	1.0000	1.0000	1.0000	1.0000	0.0000	1.0000	1.0000	1.0000	1.0000	1.0000	1.0000	1.0000
V-L Flowrate (kg_{mol}/hr)	18,130	17,423	707	648	0	186	84	17,423	110,253	135,335	39,206	138,433
V-L Flowrate (kg/hr)	406,157	376,892	29,264	25,561	0	3,353	1,958	376,892	3,181,556	3,947,891	706,309	4,033,830
Solids Flowrate (kg/hr)	0	0	0	0	5,155	0	0	0	0	0	0	0
Temperature (°C)	37	45	45	38	183	50	183	193	15	597	566	128
Pressure (MPa, abs)	3.26	3.23	3.23	3.26	0.29	0.27	0.45	3.04	0.10	0.10	12.51	0.10
Steam Table Enthalpy (kJ/kg)[A]	42.19	56.56	7.85	9.07	---	112.83	803.36	284.56	30.23	756.41	3,517.05	236.12
AspenPlus Enthalpy (kJ/kg)[B]	-5,775.54	-5,639.92	-7,371.67	-8,632.47	146.29	-15,856.50	-7,154.59	-5,411.92	-97.58	-1,019.34	-12,463.25	-1,513.63
Density (kg/m^3)	28.7	26.7	60.4	56.9	5,269.7	967.5	2.8	16.8	1.2	0.4	34.8	0.9
V-L Molecular Weight	22.403	21.632	41.414	39.438	---	18.017	23.328	21.632	28.857	29.171	18.015	29.139
V-L Flowrate (lb_{mol}/hr)	39,970	38,412	1,558	1,429	0	410	185	38,412	243,065	298,364	86,435	305,193
V-L Flowrate (lb/hr)	895,423	830,906	64,517	56,353	0	7,393	4,318	830,906	7,014,130	8,703,609	1,557,144	8,893,074
Solids Flowrate (lb/hr)	0	0	0	0	11,364	0	0	0	0	0	0	0
Temperature (°F)	98	112	112	100	361	123	362	380	59	1,106	1,051	263
Pressure (psia)	472.5	468.1	468.1	472.5	41.7	39.5	65.0	440.6	14.7	15.1	1,814.7	14.8
Steam Table Enthalpy (Btu/lb)[A]	18.1	24.3	3.4	3.9	---	48.5	345.4	122.3	13.0	325.2	1,512.1	101.5
AspenPlus Enthalpy (Btu/lb)[B]	-2,483.0	-2,424.7	-3,169.2	-3,711.3	62.9	-6,817.1	-3,075.9	-2,326.7	-42.0	-438.2	-5,358.2	-650.7
Density (lb/ft^3)	1.794	1.664	3.771	3.552	328.976	60.400	0.174	1.050	0.076	0.026	2.173	0.055

[A]Steam table reference conditions are 32.02°F & 0.089 psia

[B]Aspen thermodynamic reference state is the component's constituent elements in an ideal gas state at 25°C and 1 atm

3.3.4.3 Raw Gas Cooling and Particulate Removal

The product gas from the gasifier is cooled below 1,038°C (1,900°F) by adding cooled recycled syngas. The mixed gas (stream 12) then goes through the SGC unit, which consists of a fire-tube boiler with convective superheating and economizing sections, which lowers the temperature of the syngas to 357°C (675°F) by producing HP steam at 12.8 MPa (1,852 psia) for use in the steam cycle.

The majority of the fine particulates in the cooled gas from the syngas cooler are removed by passing through a cyclone collector, followed by an array of raw gas metallic candle filter elements in a pressure vessel (recycled syngas is used as the pulse gas to clean the candle filters). The syngas scrubber removes additional PM further downstream (covered in Section 3.3.4.5).

The fines are pneumatically returned to the first stage of the gasifier, which, in combination with the recycling of the char, allows for a carbon conversion of 99.2 percent.

The syngas from the candle filter is further cooled to 232°C (450°F) by producing IP steam at 5.1 MPa (740 psia) for use in the gasifier (stream 10) and preheating the N_2 diluent (stream 6) prior to the CT.

3.3.4.4 Quench Gas Compressor

Eleven percent of the cooled syngas is recycled back to the gasifier, with 38 percent of that being used as quench gas at the gasifier exit (covered in Section 3.3.4.3). A condensing HX is used to dry the recycled syngas from 23.0 vol% water to 0.2 vol% water by cooling it to 41°C (105°F). The dried syngas is compressed to 5.5 MPa (800 psia) in a single-stage compressor prior to distribution in the gasifier.

3.3.4.5 Syngas Scrubber

The ejector-type venturi scrubber is common to all cases and was covered in Section 3.1.12.1.1. The raw syngas exiting the final raw gas cooler at 232°C (450°F) (stream 13) enters the scrubber for removal of HCl and remaining PM. The treated syngas leaves the scrubber saturated at a temperature of 172°C (341°F).

Effluent from the scrubber is recycled to maintain a concentration of chloride in the blowdown (stream 19) of 5,000 ppmw. The recycled effluent is mixed with process water (stream 17) and cooled to 58°C (137°F), by preheating syngas prior to the CT, before being cooled further to 21°C (70°F) with cooling water and injected into the scrubber. The rate of process water addition is controlled to maintain the HCl removal rate at 98 percent. A 50 wt% solution of NaOH (stream 15) is added at a rate of 714 kg/hr (1,574 lb/hr) to the scrubber to maintain pH and form the HSS NaCl.

The blowdown from the syngas scrubber is sent to the process water treatment system for chloride removal and recycle.

3.3.4.6 COS Hydrolysis

The COS hydrolysis unit is common to all non-CO_2 capture cases and was covered in Section 3.1.5.1. Following the syngas scrubber, the gas is reheated to 186°C (366°F) and fed to the COS hydrolysis reactor where 95 percent of the COS is hydrolyzed with steam over a catalyst bed to H_2S and CO_2. Before the raw syngas can be treated in the AGR process, it must be cooled and treated for NH_3.

3.3.4.7 Low Temperature Heat Recovery

The raw syngas from the COS unit is cooled through a series of four shell and tube HXs (covered in Section 3.1.12.1.2). The first stage cools the syngas from 186°C (366°F) to 162°C (323°F) by raising 0.4 MPa (65 psia) process steam. The second stage cools the syngas to 134°C (274°F) by heating the slurry FW, preheating the syngas prior to the CT, and preheating the FW to the HRSG. The third stage cools the syngas to 59°C (138°F) by preheating FW to the HRSG and the fourth stage cools the syngas to 29°C (85°F) with cooling water. During cooling, part of the water vapor condenses, along with significant amounts of NH_3, and is combined with the effluent of the NH_3 wash.

3.3.4.8 Sour Water Stripper and Ammonia Wash

The primary SWS removes NH_3, H_2S, and other dissolved gases from the remaining water from the process water drum (stream 20), as was covered in Section 3.1.12.1.3. Process water flows from the drum to the SWS, which consists of a packed column with a steam-heated reboiler. Sour gas is stripped from the liquid and sent to the SRU. The remaining water is combined with raw water makeup (stream 23) and cooled to 21°C (70°F) with cooling water prior to being used as feed to the NH_3 wash.

The cooled syngas gas from the LTHR is sent to the NH_3 wash (covered in Section 3.1.12.1.4) where it flows upward against a counter-current spray of water from the SWS. The rate of raw water makeup addition to the NH_3 wash is controlled to achieve a concentration of NH_3 in the treated gas (stream 22) of 10 ppm. The effluent from the NH_3 wash contains high concentrations of NH_3 and is combined with the effluent from the LTHR system before being flashed and sent to the process water drum (stream 21). The vapor product of the flash is sent to the SRU.

A secondary SWS is included in this case to reduce the concentration of NH_3 in the condensate from the brine concentrator and crystallizer to 200 ppmw prior to being fed into a steam generator for production of steam injected into the gasifier (stream 10).

3.3.4.9 Process Water Treatment

The process water treatment system—which consists of a vacuum flash, brine concentrator, and crystallizer—is common to all cases and was covered in Section 3.1.12.2. The blowdown (stream 19) from the syngas scrubber is first flashed to 0.5 MPa (70 psia) with the effluent subsequently vacuum flashed to 0.05 MPa (7.5 psia). The vapor products from both the LP and vacuum flash stages are first cooled to 72°C (162°F), by preheating syngas prior to the CT, before being cooled further to 29°C (85°F) using cooling water. The cooled streams are sent to an

overhead flash to 0.2 MPa (35 psia) with the sour gas compressed to 0.4 MPa (65 psia) and sent to the SRU for incineration. The effluent from the overhead flash and condensate from the sour gas compressor are collected and sent to the process water drum for distribution (stream 24).

The effluent from the vacuum flash is sent to the brine concentrator, which evaporates sufficient water to produce an effluent containing approximately 250,000 TDS. The vapor product from the brine concentrator is compressed to 0.14 MPa (21 psia) and cooled to provide heat to the brine concentrator for evaporation. The vapor product is condensed in a HX, which provides preheat to the brine concentrator feed.

The effluent from the brine concentrator then enters the steam-driven crystallizer, where 3,022 kg/hr (6,662 lb/hr) of 0.45 MPa (65 psia) steam is utilized to evaporate sufficient water to produce a super-saturated solution in the effluent. A portion of the effluent is extracted and sent to a centrifuge to separate solids. The centrifuge effluent is returned to the crystallizer.

The vapor product from the brine concentrator is condensed with cooling water and combined with the condensate from the brine concentrator before being further treated in the secondary SWS (covered in sections 3.1.12.1.3 and 3.3.4.8).

3.3.4.10 Mercury Removal and AGR

The cooled syngas (stream 22) passes through a series of two carbon beds to remove approximately 97 percent of the Hg (covered in Section 3.1.4).

Cool, particulate-free syngas (stream 25) enters the absorber unit at approximately 3.3 MPa (473 psia) and 37°C (98°F). In the absorber, H_2S is preferentially removed from the syngas stream by contact with MDEA. The absorber column is operated at 44°C (112°F) by refrigerating the lean MDEA solvent. The lower temperature is required to achieve an outlet H_2S concentration of less than 30 ppmv in the sweet syngas. The stripper acid gas stream (stream 27), consisting of 23 vol% H_2S and 76 vol% CO_2, is sent to the Claus unit.

3.3.4.11 Claus Unit

Acid gas (stream 27) from the MDEA unit is preheated to 219°C (427°F). A portion of the acid gas, along with all of the sour gas (stream 31) and some O_2 from the ASU (stream 2), is fed to the SRU (a Claus bypass type). In the furnace, molten sulfur is produced by catalytically oxidizing approximately one third of the H_2S in the feed to SO_2 at a furnace temperature of 1,316°C (2,400°F), which must be maintained in order to thermally decompose all of the NH_3 present in the sour gas stream. The remaining H_2S is then reacted with SO_2 to produce sulfur and water. Following the thermal stage and condensation of sulfur, three reheaters and three sulfur converters are used to obtain a per-pass H_2S conversion of 99.1 percent. The Claus plant tail gas is hydrogenated and recycled back to the AGR (stream 28).

The total elemental sulfur production from the SRU (stream 28) is approximately 123 tonnes/day (136 tpd).

The waste heat from the Claus unit is used to satisfy all Claus process preheating and reheating requirements, as well as to provide some medium-pressure (1.7 MPa [250 psia]) steam to the ASU.

3.3.4.12 Power Block

The clean syngas exiting the MDEA absorber (stream 26) is reheated (stream 32) to 193°C (380°F) and diluted with LP N_2 from the ASU (stream 6). The diluted syngas enters the state-of-the-art 2008 F-class CT burner. The CT compressor provides combustion air (stream 33) to the burner. The exhaust gas exits the CT at 597°C (1,106°F) (stream 34) and enters the HRSG where additional heat is recovered until the flue gas exits the HRSG at 132°C (270°F) and is discharged through the plant stack. The steam raised in the HRSG is used to power an advanced, commercially available steam turbine using a 12.4 MPa/566°C/566°C (1,800 psig/1,051°F/1,051°F) steam cycle.

3.3.4.13 Air Separation Unit

The ASU is designed to produce a nominal output of 3,665 tonnes/day (4,040 tpd) of 95 mol% O_2 for use in the gasifier (stream 4) and SRU (stream 2). The plant is designed with two production trains. The air compressor is powered by an electric motor. Approximately 9,489 tonnes/day (10,459 tpd) of N_2 is also recovered, compressed, and used as dilution in the CT combustor and particle filter fines transportation.

3.3.5 Case B4A – Performance Results

The plant produces a net output of 641 MW at a net plant efficiency of 41.1 percent (HHV basis).

Overall performance for the entire plant is summarized in Exhibit 3-58. Exhibit 3-59 provides a detailed breakdown of the auxiliary power requirements. The ASU accounts for approximately 76 percent of the total auxiliary load distributed between the MAC, O_2 compressor, N_2 compressor, and ASU auxiliaries. The cooling water system, including the circulating water pumps and cooling tower fan, accounts for approximately 5 percent of the auxiliary load, and the BFW pumps account for an additional 4 percent. All other systems together constitute the remaining 15 percent of the auxiliary load.

Exhibit 3-58. Case B4A plant performance summary

Performance Summary	
Combustion Turbine Power, MWe	464
Sweet Gas Expander Power, MWe	0
Steam Turbine Power, MWe	299
Total Gross Power, MWe	**763**
Air Separation Unit Main Air Compressor, kWe	61,000
Air Separation Unit Booster Compressor, kWe	4,800
N_2 Compressors, kWe	25,830
CO_2 Compression, kWe	0
Acid Gas Removal, kWe	3,200

Performance Summary	
Balance of Plant, kWe	27,590
Total Auxiliaries, MWe	**122**
Net Power, MWe	**641**
HHV Net Plant Efficiency, %	41.1%
HHV Net Plant Heat Rate, kJ/kWh (Btu/kWh)	8,765 (8,308)
HHV Cold Gas Efficiency, %	81.2%
HHV Combustion Turbine Efficiency, %	37.6%
LHV Net Plant Efficiency, %	42.6%
LHV Net Plant Heat Rate, kJ/kWh (Btu/kWh)	8,454 (8,013)
LHV Cold Gas Efficiency, %	77.5%
LHV Combustion Turbine Efficiency, %	40.8%
Steam Turbine Cycle Efficiency, %	46.1%
Steam Turbine Heat Rate, kJ/kWh (Btu/kWh)	7,806 (7,398)
Condenser Duty, GJ/hr (MMBtu/hr)	1,547 (1,467)
AGR Cooling Duty, GJ/hr (MMBtu/hr)	125 (119)
As-Received Coal Feed, kg/hr (lb/hr)	206,986 (456,327)
HHV Thermal Input, kWt	1,560,166
LHV Thermal Input, kWt	1,504,799
Raw Water Withdrawal, $(m^3/min)/MW_{net}$ (gpm/MW_{net})	0.026 (6.8)
Raw Water Consumption, $(m^3/min)/MW_{net}$ (gpm/MW_{net})	0.020 (5.3)
O_2:As-Received Coal	0.683

Exhibit 3-59. Case B4A plant power summary

Power Summary	
Combustion Turbine Power, MWe	464
Sweet Gas Expander Power, MWe	0
Steam Turbine Power, MWe	299
Total Gross Power, MWe	**763**
Auxiliary Load Summary	
Acid Gas Removal, kWe	3,200
Air Separation Unit Auxiliaries, kWe	1,000
Air Separation Unit Main Air Compressor, kWe	61,000
Air Separation Unit Booster Compressor, kWe	4,800
Ammonia Wash Pumps, kWe	70

Power Summary	
Circulating Water Pumps, kWe	4,080
Claus Plant TG Recycle Compressor, kWe	1,520
Claus Plant/TGTU Auxiliaries, kWe	250
CO_2 Compression, kWe	0
Coal Dryer Air Compressor, kWe	0
Coal Handling, kWe	460
Coal Milling, kWe	2,130
Combustion Turbine Auxiliaries, kWe	1,000
Condensate Pumps, kWe	240
Cooling Tower Fans, kWe	2,110
Feedwater Pumps, kWe	4,240
Gasifier Water Pump, kWe	100
Ground Water Pumps, kWe	390
Miscellaneous Balance of Plant[A], kWe	3,000
N_2 Compressors, kWe	25,830
N_2 Humidification Pump, kWe	0
O_2 Pump, kWe	310
Quench Water Pump, kWe	0
Shift Steam Pump, kWe	0
Slag Handling, kWe	1,090
Slag Reclaim Water Recycle Pump, kWe	0
Slurry Water Pump, kWe	180
Sour Gas Compressors, kWe	90
Sour Water Recycle Pumps, kWe	0
Steam Turbine Auxiliaries, kWe	200
Syngas Recycle Compressor, kWe	970
Auxiliary Load Summary	
Syngas Scrubber Pumps, kWe	120
Process Water Treatment Auxiliaries, kWe	1,330
Transformer Losses, kWe	2,710
Total Auxiliaries, MWe	**122**
Net Power, MWe	**641**

[A]Includes plant control systems, lighting, HVAC, and miscellaneous low voltage loads

3.3.5.1 Environmental Performance

The environmental targets for emissions of Hg, HCl, NOx, SO_2, and PM were presented in Section 2.4. A summary of the plant air emissions for Case B4A is presented in Exhibit 3-60. All HCl is assumed to be removed and is, therefore, not reported.

Exhibit 3-60. Case B4A air emissions

	kg/GJ (lb/MMBtu)	Tonne/year (ton/year)[A]	kg/MWh (lb/MWh)[B]
SO_2	0.012 (0.028)	466 (514)	0.087 (0.192)
NOx	0.024 (0.056)	954 (1,052)	0.178 (0.393)
Particulate	0.003 (0.007)	120 (132)	0.022 (0.050)
Hg	1.85E-7 (4.30E-7)	0.007 (0.008)	1.36E-6 (3.00E-6)
HCl	0.000 (0.000)	0.00 (0.00)	0.000 (0.000)
CO_2	86 (199)	3,374,280 (3,719,507)	631 (1,391)
CO_2[C]	-	-	751 (1,657)

[A]Calculations based on an 80 percent capacity factor
[B]Emissions based on gross power except where otherwise noted
[C]CO_2 emissions based on net power instead of gross power

The low level of SO_2 in the plant emissions is achieved by capturing the sulfur in the gas by the refrigerated MDEA AGR process. The AGR process removes over 99 percent of the sulfur compounds in the fuel gas down to a level of less than 30 ppmv. This results in a concentration in the flue gas of less than 4 ppmv. The H_2S-rich regeneration gas from the AGR system is fed to a Claus plant, producing elemental sulfur. The Claus plant tail gas is hydrogenated to convert all sulfur species to H_2S and then recycled back to the gasifier, thereby eliminating the need for a TGTU.

NOx emissions are limited by the use of N_2 dilution to 15 ppmvd (as NO at 15 percent O_2). NH_3 in the syngas is removed with process condensate prior to the low-temperature AGR process and destroyed in the Claus plant burner. This helps lower NOx levels as well.

Particulate discharge to the atmosphere is limited to extremely low values by the use of a cyclone and a barrier filter in addition to the syngas scrubber and the gas washing effect of the AGR absorber. The particulate emissions represent filterable particulate only.

Approximately 97 percent of the mercury is captured from the syngas by dual activated carbon beds.

CO_2 emissions represent the uncontrolled discharge from the process.

The carbon balance for the plant is shown in Exhibit 3-61. The carbon input to the plant consists of carbon in the air in addition to carbon in the coal. Carbon in the air is not neglected here since the Aspen model accounts for air components throughout. Carbon leaves the plant as unburned carbon in the slag and as CO_2 in the stack gas (includes the ASU vent gas).

Exhibit 3-61. Case B4A carbon balance

Carbon In		Carbon Out	
	kg/hr (lb/hr)		kg/hr (lb/hr)
Coal	131,943 (290,884)	Stack Gas	131,406 (289,702)
Air (CO_2)	519 (1,144)	CO_2 Product	–
		Slag	1,056 (2,327)
Total	**132,462 (292,029)**	**Total**	**132,462 (292,029)**

Exhibit 3-62 shows the sulfur balance for the plant. Sulfur input comes solely from the sulfur in the coal. Sulfur output includes the sulfur recovered in the Claus plant and sulfur emitted in the stack gas. Sulfur in the slag is considered to be negligible.

Exhibit 3-62. Case B4A sulfur balance

Sulfur In		Sulfur Out	
	kg/hr (lb/hr)		kg/hr (lb/hr)
Coal	5,188 (11,437)	Stack Gas	33 (73)
		CO_2 Product	–
		Elemental Sulfur	5,155 (11,364)
Total	**5,188 (11,437)**	**Total**	**5,188 (11,437)**

Exhibit 3-63 shows the overall water balance for the plant. The water balance was explained in Case B1A (Shell) but is also presented here for completeness.

Water demand represents the total amount of water required for a particular process. Some water is recovered within the process, primarily as syngas condensate, and is re-used as internal recycle. The difference between demand and recycle is raw water withdrawal. Raw water withdrawal is defined as the water removed from the ground or diverted from a surface-water source for use in the plant and was assumed to be provided 50 percent by a POTW and 50 percent from groundwater. Raw water withdrawal can be represented by the water metered from a raw water source and used in the plant processes for all purposes, such as cooling tower makeup, BFW makeup, quench system makeup, and slag handling makeup. The difference between water withdrawal and process water discharge is defined as water consumption and can be represented by the portion of the raw water withdrawn that is evaporated, transpired, incorporated into products or otherwise not returned to the water source from which it was withdrawn. Water consumption represents the net impact of the plant process on the water source balance.

Exhibit 3-63. Case B4A water balance

Water Use	Water Demand	Internal Recycle	Raw Water Withdrawal	Process Water Discharge	Raw Water Consumption
	m^3/min (gpm)	m^3/min (gpm)	m^3/min (gpm)	m^3/min (gpm)	m^3/min (gpm)
Slag Handling	0.46 (121)	0.46 (121)	–	–	–
Slurry Water	1.42 (375)	1.42 (375)	–	–	–
Gasifier Water	–	–	–	–	–
Quench	–	–	–	–	–
HCl Scrubber	1.08 (284)	1.08 (284)	–	–	–
NH_3 Scrubber	0.99 (262)	0.64 (169)	0.35 (93)	–	0.35 (93)
Gasifier Steam	0.84 (222)	0.84 (222)	–	–	–
Condenser Makeup	**0.49 (130)**	**–**	**0.49 (130)**	**–**	**0.49 (130)**
BFW Makeup	0.21 (56)	–	0.21 (56)	–	0.21 (56)
Gasifier Steam	0.28 (74)	–	0.28 (74)	–	0.28 (74)
Shift Steam	–	–	–	–	–
N_2 Humidification	–	–	–	–	–
Cooling Tower	**15.88 (4,196)**	**0.23 (61)**	**15.65 (4,134)**	**3.57 (944)**	**12.08 (3,191)**
BFW Blowdown	–	0.21 (56)	-0.21 (-56)	–	-0.21 (-56)
ASU Knockout	–	0.02 (5)	-0.02 (-5)	–	-0.02 (-5)
Total	**21.16 (5,589)**	**4.66 (1,232)**	**16.49 (4,357)**	**3.57 (944)**	**12.92 (3,413)**

An overall plant energy balance is provided in tabular form in Exhibit 3-64. The power out is the combined CT and steam turbine power prior to generator losses. The power at the generator terminals (shown in Exhibit 3-58) is calculated by multiplying the power out by a combined generator efficiency of 98.5 percent.

Exhibit 3-64. Case B4A overall energy balance (0°C [32°F] reference)

	HHV	Sensible + Latent	Power	Total
Heat In, MMBtu/hr (GJ/hr)				
Coal	5,617 (5,324)	4.7 (4.4)	–	5,621 (5,328)
Air	–	115.4 (109.3)	–	115.4 (109.3)
Raw Water Makeup	–	62.0 (58.8)	–	62.0 (58.8)
Auxiliary Power	–	–	440.7 (417.7)	440.7 (417.7)
TOTAL	**5,617 (5,324)**	**182.1 (172.6)**	**440.7 (417.7)**	**6,239 (5,914)**
Heat Out, MMBtu/hr (GJ/hr)				
Misc. Process Steam	–	4.8 (4.6)	–	4.8 (4.6)
Slag	34.6 (32.8)	23.7 (22.5)	–	58.3 (55.3)
Stack Gas	–	952 (903)	–	952 (903)
Sulfur	47.8 (45.3)	0.6 (0.6)	–	48.4 (45.8)
Motor Losses and Design Allowances	–	–	53.7 (50.9)	53.7 (50.9)
Cooling Tower Load[A]	–	2,074 (1,966)	–	2,074 (1,966)
CO_2 Product Stream	–	–	–	–
Blowdown Streams	–	34.2 (32.4)	–	34.2 (32.4)
Ambient Losses[B]	–	144.1 (136.6)	–	144.1 (136.6)
Power	–	–	2,748 (2,604)	2,748 (2,604)
TOTAL	**82.4 (78.1)**	**3,234 (3,065)**	**2,801 (2,655)**	**6,117 (5,798)**
Unaccounted Energy[C]	–	–	–	122.0 (115.6)

[A]Includes condenser, AGR, and miscellaneous cooling loads
[B]Ambient losses include all losses to the environment through radiation, convection, etc. Sources of these losses include the combustor, reheater, superheater, and transformers
[C]By difference

3.3.5.2 Energy and Mass Balance Diagrams

Energy and mass balance diagrams are shown for the following subsystems in Exhibit 3-65 through Exhibit 3-67:

- Coal gasification and ASU
- Syngas cleanup, sulfur recovery, and tail gas recycle
- Combined cycle power generation, steam, and FW

This page intentionally left blank

Exhibit 3-65. Case B4A coal gasification and ASU energy and mass balance

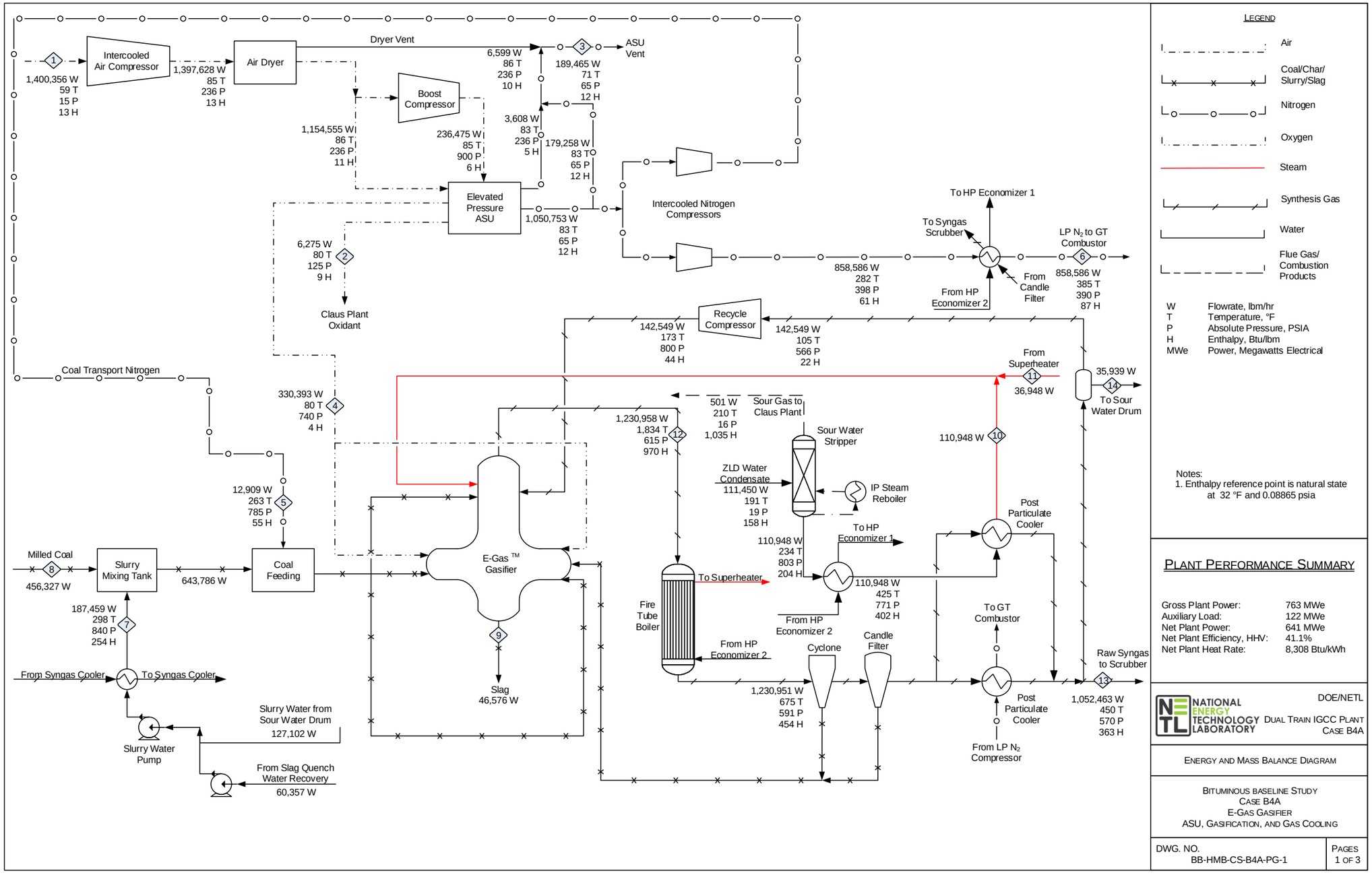

Exhibit 3-66. Case B4A syngas cleanup energy and mass balance

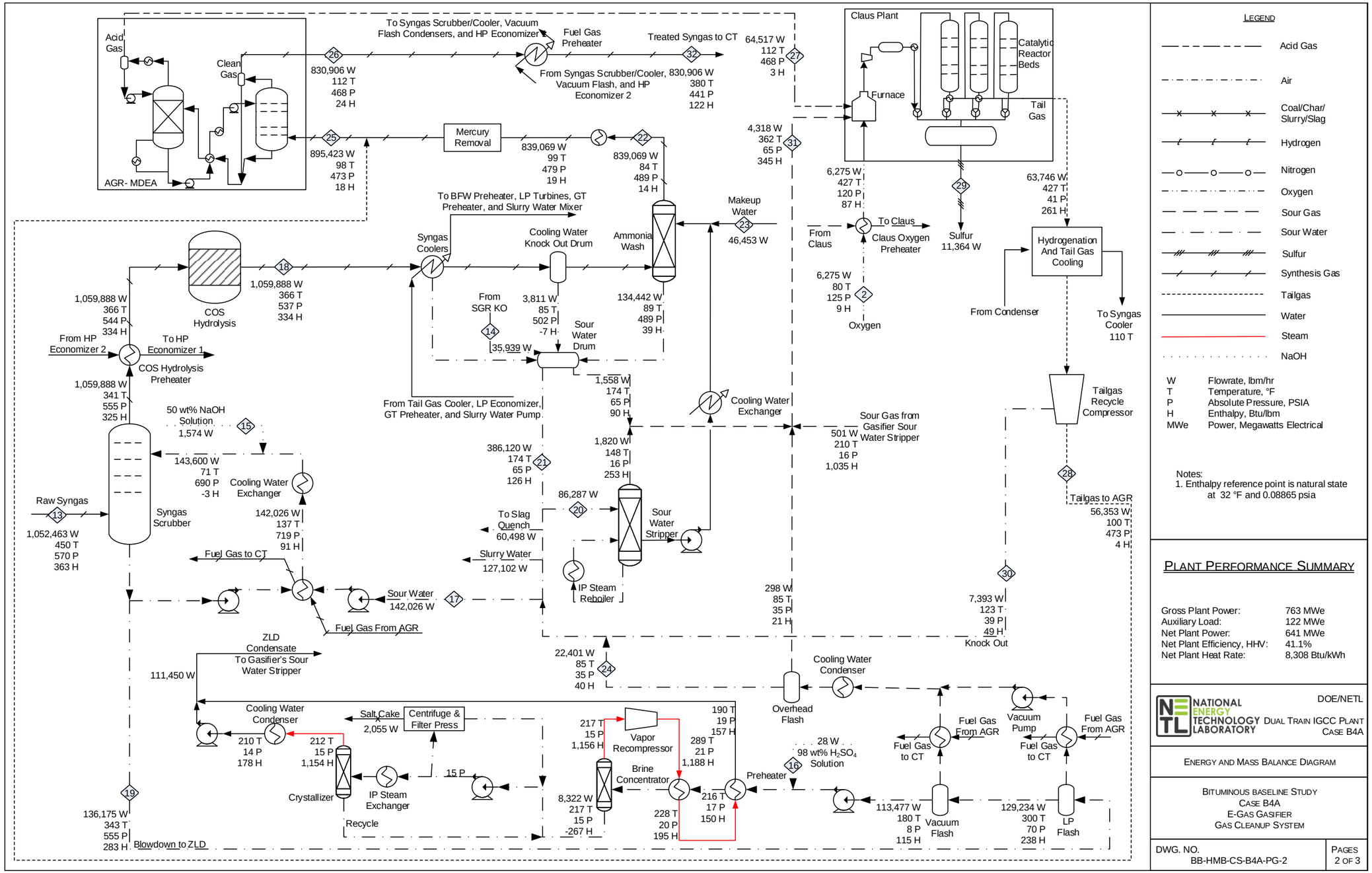

Exhibit 3-67. Case B4A combined cycle power generation energy and mass balance

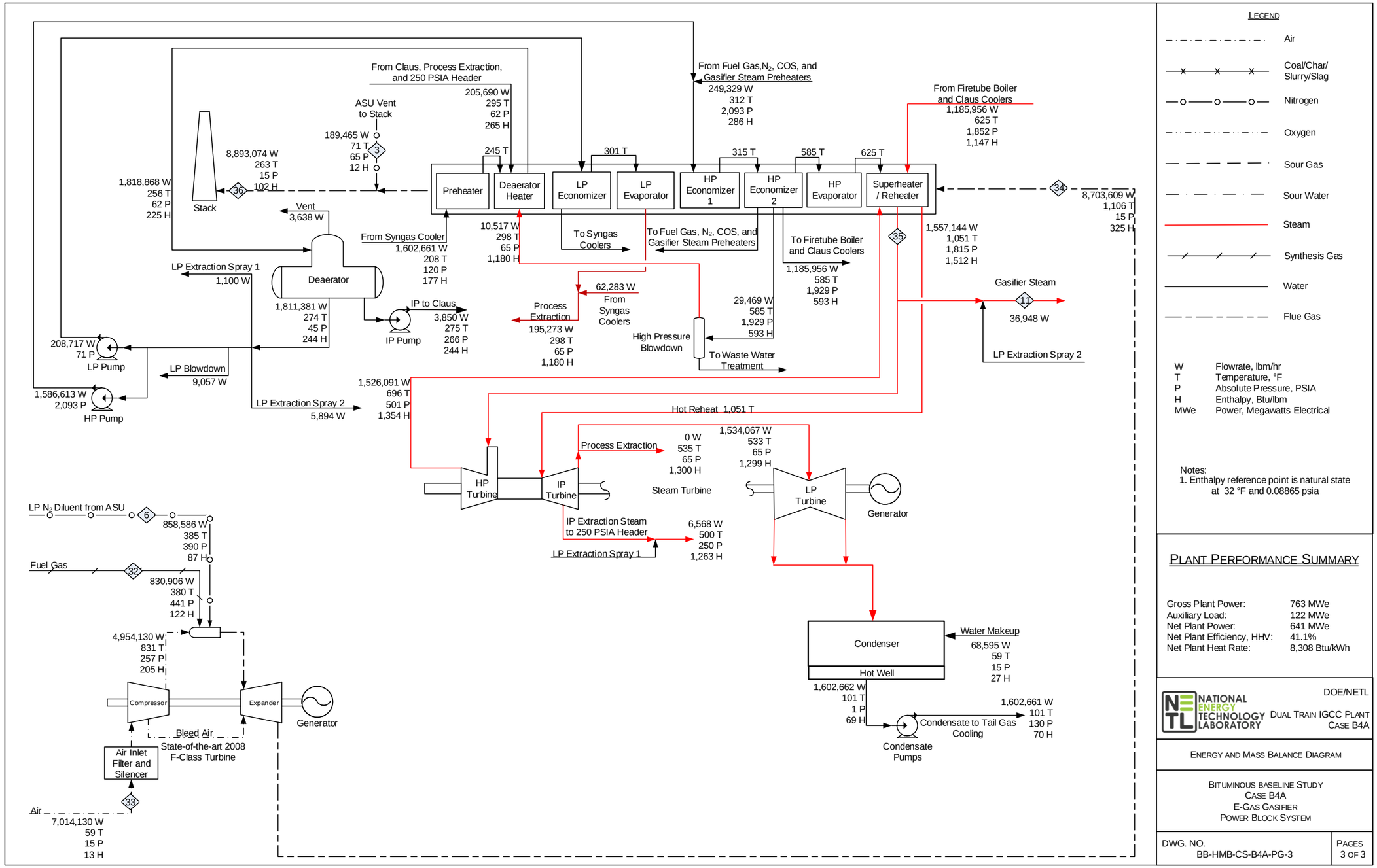

This page intentionally left blank

3.3.6 Case B4A – Major Equipment List

Major equipment items for the E-Gas™ gasifier with no CO_2 capture are shown in the following tables. In general, the design conditions include a 10 percent design allowance for flows and heat duties, and a 21 percent design allowance for heads on pumps and fans.

Case B4A – Account 1: Coal Handling

Equipment No.	Description	Type	Design Condition	Operating Qty.	Spares
1	Bottom Trestle Dumper and Receiving Hoppers	N/A	181 tonne (200 ton)	2	0
2	Feeder	Belt	570 tonne/hr (630 tph)	2	0
3	Conveyor No. 1	Belt	1,130 tonne/hr (1,250 tph)	1	0
4	Conveyor No. 2	Belt	1,130 tonne/hr (1,250 tph)	1	0
5	Stacker/Reclaimer	Traveling, linear	1,130 tonne/hr (1,250 tph)	1	0
6	Reclaim Hopper	N/A	40 tonne (50 ton)	2	1
7	Feeder	Vibratory	170 tonne/hr (190 tph)	2	1
8	Conveyor No. 3	Belt w/ tripper	340 tonne/hr (380 tph)	1	0
9	Coal Surge Bin w/ Vent Filter	Dual outlet	170 tonne (190 ton)	2	0
10	Crusher	Impactor reduction	8 cm x 0 - 3 cm x 0 (3" x 0 - 1-1/4" x 0)	2	0
11	Conveyor No. 4	Belt w/tripper	340 tonne/hr (380 tph)	1	0
12	Conveyor No. 5	Belt w/ tripper	340 tonne/hr (380 tph)	1	0
13	Coal Silo w/ Vent Filter and Slide Gates	Field erected	760 tonne (840 ton)	3	0

Case B4A – Account 2: Coal Preparation and Feed

Equipment No.	Description	Type	Design Condition	Operating Qty.	Spares
1	Feeder	Vibratory	80 tonne/hr (80 tph)	3	0
2	Conveyor No. 6	Belt w/tripper	230 tonne/hr (250 tph)	1	0
3	Rod Mill Feed Hopper	Dual Outlet	460 tonne (500 ton)	1	0
4	Weigh Feeder	Belt	110 tonne/hr (130 tph)	2	0
5	Rod Mill	Rotary	110 tonne/hr (130 tph)	2	0
6	Slurry Water Storage Tank with Agitator	Field erected	281,010 liters (74,230 gal)	2	0
7	Slurry Water Pumps	Centrifugal	780 lpm (210 gpm)	2	1
8	Trommel Screen	Coarse	160 tonne/hr (180 tph)	2	0
9	Rod Mill Discharge Tank with Agitator	Field erected	367,600 liters (97,110 gal)	2	0
10	Rod Mill Product Pumps	Centrifugal	3,100 lpm (800 gpm)	2	2
11	Slurry Storage Tank with Agitator	Field erected	1,102,800 liters (291,300 gal)	2	0
12	Slurry Recycle Pumps	Centrifugal	6,100 lpm (1,600 gpm)	2	2
13	Slurry Product Pumps	Positive displacement	3,100 lpm (800 gpm)	2	2

Case B4A – Account 3: Feedwater and Miscellaneous Balance of Plant Systems

Equipment No.	Description	Type	Design Condition	Operating Qty.	Spares
1	Demineralized Water Storage Tank	Vertical, cylindrical, outdoor	2,055,000 liters (543,000 gal)	2	0
2	Condensate Pumps	Vertical canned	6,710 lpm @ 90 m H_2O (1,770 gpm @ 300 ft H_2O)	2	1
3	Deaerator (integral w/ HRSG)	Horizontal spray type	454,000 kg/hr (1,000,000 lb/hr)	2	0
4	Intermediate Pressure Feedwater Pump	Horizontal centrifugal, single stage	900 lpm @ 20 m H_2O (240 gpm @ 70 ft H_2O)	2	1
5	High Pressure Feedwater Pump No. 1	Barrel type, multi-stage, centrifugal	HP water: 6,860 lpm @ 1,700 m H_2O (1,810 gpm @ 5,700 ft H_2O)	2	1
6	High Pressure Feedwater Pump No. 2	Barrel type, multi-stage, centrifugal	IP water: 1,080 lpm @ 210 m H_2O (280 gpm @ 670 ft H_2O)	2	1
7	Auxiliary Boiler	Shop fabricated, water tube	18,000 kg/hr, 2.8 MPa, 343°C (40,000 lb/hr, 400 psig, 650°F)	1	0
8	Service Air Compressors	Flooded Screw	28 m^3/min @ 0.7 MPa (1,000 scfm @ 100 psig)	2	1
9	Instrument Air Dryers	Duplex, regenerative	28 m^3/min (1,000 scfm)	2	1
10	Closed Cycle Cooling Heat Exchangers	Plate and frame	221 GJ/hr (209 MMBtu/hr) each	2	0
11	Closed Cycle Cooling Water Pumps	Horizontal centrifugal	79,100 lpm @ 20 m H_2O (20,900 gpm @ 70 ft H_2O)	2	1
12	Engine-Driven Fire Pump	Vertical turbine, diesel engine	3,785 lpm @ 110 m H_2O (1,000 gpm @ 350 ft H_2O)	1	1
13	Fire Service Booster Pump	Two-stage horizontal centrifugal	2,650 lpm @ 80 m H_2O (700 gpm @ 250 ft H_2O)	1	1
14	Municipal Water Pumps	Stainless steel, single suction	3,240 lpm @ 20 m H_2O (860 gpm @ 60 ft H_2O)	2	1
15	Ground Water Pumps	Stainless steel, single suction	3,240 lpm @ 270 m H_2O (860 gpm @ 880 ft H_2O)	2	1
16	Filtered Water Pumps	Stainless steel, single suction	480 lpm @ 50 m H_2O (130 gpm @ 160 ft H_2O)	2	1
17	Filtered Water Tank	Vertical, cylindrical	230,000 liter (61,000 gal)	2	0
18	Makeup Water Demineralizer	Anion, cation, and mixed bed	290 lpm (80 gpm)	2	0
19	Liquid Waste Treatment System	N/A	10 years, 24-hour storm	1	0
20	Process Water Treatment	Vacuum flash, brine concentrator, and crystallizer	Vacuum Flash - Inlet: 34,000 kg/hr (75,000 lb/hr) Outlet: 6,000 ppmw Cl- Brine Concentrator Inlet - 28,000 kg/hr (62,000 lb/hr) Crystallizer Inlet - 2,000 kg/hr (5,000 lb/hr)	2	0

Case B4A – Account 4: Gasifier, ASU, and Accessories

Equipment No.	Description	Type	Design Condition	Operating Qty.	Spares
1	Gasifier	Pressurized two-stage, slurry-feed entrained bed	2,700 tonne/day, 4.2 MPa (3,000 tpd, 615 psia)	2	0
2	Synthesis Gas Cooler	Fire-tube boiler	307,000 kg/hr (677,000 lb/hr)	2	0
3	Synthesis Gas Cyclone	High efficiency	307,000 kg/hr (677,000 lb/hr) Design efficiency 90%	2	0
4	HCl Scrubber	Ejector Venturi	263,000 kg/hr (579,000 lb/hr)	2	0
5	Ammonia Wash	Counter-flow spray tower	210,000 kg/hr (463,000 lb/hr) @ 3.5 MPa (502 psia)	2	0
6	Primary Sour Water Stripper	Counter-flow with external reboiler	22,000 kg/hr (47,000 lb/hr)	2	0
7	Secondary Sour Water Stripper	Counter-flow with external reboiler	28,000 kg/hr (61,000 lb/hr)	2	0
8	Low Temperature Heat Recovery Coolers	Shell and tube with condensate drain	264,000 kg/hr (583,000 lb/hr)	6	0
9	Low Temperature Heat Recovery Knockout Drum	Vertical with mist eliminator	211,000 kg/hr, 59°C, 3.5 MPa (466,000 lb/hr, 138°F, 506 psia)	2	0
10	Saturation Water Economizers	Shell and tube	N/A	4	0
11	HP Nitrogen Gas Saturator	Direct Injection	N/A	2	0
12	LP Nitrogen Gas Saturator	Direct Injection	214,000 kg/hr, 196°C, 2.7 MPa (472,000 lb/hr, 385°F, 390 psia)	2	0
13	Saturator Water Pump	Centrifugal	N/A	2	2
14	Saturated Nitrogen Reheaters	Shell and tube	N/A	4	0
15	Synthesis Gas Reheaters	Shell and tube	Reheater 1: N/A Reheater 2: 35,000 kg/hr (76,000 lb/hr) Reheater 3: 98,000 kg/hr (216,000 lb/hr) Reheater 4: 75,000 kg/hr (165,000 lb/hr) Reheater 5: 207,000 kg/hr (457,000 lb/hr) Reheater 6: 207,000 kg/hr (457,000 lb/hr)	2	0
16	Flare Stack	Self-supporting, carbon steel, stainless steel top, pilot ignition	264,000 kg/hr (583,000 lb/hr) syngas	2	0
17	ASU Main Air Compressor	Centrifugal, multi-stage	5,000 m^3/min @ 1.6 MPa (169,000 scfm @ 236 psia)	2	0
18	Cold Box	Vendor design	2,000 tonne/day (2,200 tpd) of 95% purity O_2	2	0

Equipment No.	Description	Type	Design Condition	Operating Qty.	Spares
19	Gasifier O_2 Pump	Centrifugal, multi-stage	1,000 m^3/min (36,000 scfm) Suction - 1.0 MPa (130 psia) Discharge - 5.1 MPa (740 psia)	2	0
20	AGR Nitrogen Boost Compressor	Centrifugal, multi-stage	N/A	2	0
21	High Pressure Nitrogen Diluent Compressor	Centrifugal, multi-stage	N/A	2	0
22	Low Pressure Nitrogen Diluent Compressor	Centrifugal, single-stage	3,020 m^3/min (107,000 scfm) Suction - 0.4 MPa (70 psia) Discharge - 2.7 MPa (400 psia)	2	0
23	Gasifier Nitrogen Boost Compressor	Centrifugal, single-stage	50 m^3/min (2,000 scfm) Suction - 0.4 MPa (70 psia) Discharge - 5.4 MPa (790 psia)	2	0

Case B4A – Account 5: Syngas Cleanup

Equipment No.	Description	Type	Design Condition	Operating Qty.	Spares
1	Mercury Adsorber 1	Sulfated carbon bed	209,000 kg/hr (461,000 lb/hr) 29°C (84°F), 3.4 MPa (489 psia)	2	0
2	Mercury Adsorber 2	Sulfated carbon bed	209,000 kg/hr (461,000 lb/hr) 37°C (99°F), 3.3 MPa (476 psia)	2	0
3	Sulfur Plant	Claus type	136 tonne/day (150 tpd)	1	0
4	COS Hydrolysis Reactor	Fixed bed, catalytic	264,000 kg/hr (583,000 lb/hr) 188°C (370°F), 3.7 MPa (540 psia)	2	0
5	COS Hydrolysis Heat Exchanger	Shell and Tube	6 GJ/hr (5 MMBtu/hr)	2	0
6	Acid Gas Removal Plant	MDEA	223,000 kg/hr (492,000 lb/hr) 37°C (98°F), 3.3 MPa (473 psia)	2	0
7	Hydrogenation Reactor	Fixed bed, catalytic	32,000 kg/hr (70,000 lb/hr), 219°C (427°F), 0.3 MPa (40.8425733 psia)	1	0
8	Tail Gas Recycle Compressor	Centrifugal	28,000 kg/hr (62,000 lb/hr) each	1	0
9	Candle Filter	Pressurized filter with pulse-jet cleaning	metallic filters	2	0

Case B4A – Account 6: Combustion Turbine and Accessories

Equipment No.	Description	Type	Design Condition	Operating Qty.	Spares
1	Combustion Turbine	State-of-the-art 2008 F-Class	232 MW	2	0
2	Combustion Turbine Generator	TEWAC	260 MVA @ 0.9 p.f., 24 kV, 60 Hz, 3-phase	2	0

Case B4A – Account 7: HRSG, Ductwork, and Stack

Equipment No.	Description	Type	Design Condition	Operating Qty.	Spares
1	Stack	CS plate, type 409SS liner	76 m (250 ft) high x 8.5 m (28 ft) diameter	1	0
2	Heat Recovery Steam Generator	Drum, multi-pressure with economizer section and integral deaerator	Main steam - 388,470 kg/hr, 12.4 MPa/566°C (856,429 lb/hr, 1,800 psig/1,051°F) Reheat steam - 380,723 kg/hr, 3.3 MPa/566°C (839,350 lb/hr, 477 psig/1,051°F)	2	0

Case B4A – Account 8: Steam Turbine and Accessories

Equipment No.	Description	Type	Design Condition	Operating Qty.	Spares
1	Steam Turbine	Commercially available advanced steam turbine	315 MW 12.4 MPa/566°C/566°C (1,800 psig/ 1,051°F/1,051°F)	1	0
2	Steam Turbine Generator	Hydrogen cooled, static excitation	350 MVA @ 0.9 p.f., 24 kV, 60 Hz, 3-phase	1	0
3	Surface Condenser	Single pass, divided waterbox including vacuum pumps	1,700GJ/hr (1,610 MMBtu/hr), Inlet water temperature 16°C (60°F), Water temperature rise 11°C (20°F)	1	0
4	Steam Bypass	One per HRSG	50% steam flow @ design steam conditions	2	0

Case B4A – Account 9: Cooling Water System

Equipment No.	Description	Type	Design Condition	Operating Qty.	Spares
1	Circulating Water Pumps	Vertical, wet pit	409,000 lpm @ 30 m (108,000 gpm @ 100 ft)	2	1
2	Cooling Tower	Evaporative, mechanical draft, multi-cell	11°C (51.5°F) wet bulb/16°C (60°F) CWT/ 27°C (80°F) HWT/ 2,280 GJ/hr (2,160 MMBtu/hr) heat duty	1	0

Case B4A – Account 10: Slag Recovery and Handling

Equipment No.	Description	Type	Design Condition	Operating Qty.	Spares
1	Slag Quench Tank	Water bath	222,000 liters (59,000 gal)	2	0
2	Slag Crusher	Roll	12 tonne/hr (13 tph)	2	0
3	Slag Depressurizer	Proprietary	12 tonne/hr (13 tph)	2	0
4	Slag Receiving Tank	Horizontal, weir	133,000 liters (35,000 gal)	2	0
5	Black Water Overflow Tank	Shop fabricated	60,000 liters (16,000 gal)	2	0
6	Slag Conveyor	Drag chain	12 tonne/hr (13 tph)	2	0
7	Slag Separation Screen	Vibrating	12 tonne/hr (13 tph)	2	0
8	Coarse Slag Conveyor	Belt/bucket	12 tonne/hr (13 tph)	2	0
9	Fine Ash Settling Tank	Vertical, gravity	190,000 liters (50,000 gal)	2	0
10	Fine Ash Recycle Pumps	Horizontal centrifugal	50 lpm @ 14 m H_2O (10 gpm @ 46 ft H_2O)	2	2

Equipment No.	Description	Type	Design Condition	Operating Qty.	Spares
11	Grey Water Storage Tank	Field erected	60,000 liters (16,000 gal)	2	0
12	Grey Water Pumps	Centrifugal	210 lpm @ 430 m H_2O (60 gpm @ 1,420 ft H_2O)	2	2
13	Slag Storage Bin	Vertical, field erected	800 tonne (900 tons)	2	0
14	Unloading Equipment	Telescoping chute	100 tonne/hr (110 tph)	1	0

Case B4A – Account 11: Accessory Electric Plant

Equipment No.	Description	Type	Design Condition	Operating Qty.	Spares
1	CTG Transformer	Oil-filled	24 kV/345 kV, 260 MVA, 3-ph, 60 Hz	2	0
2	STG Transformer	Oil-filled	24 kV/345 kV, 320 MVA, 3-ph, 60 Hz	1	0
3	High Voltage Auxiliary Transformer	Oil-filled	345 kV/13.8 kV, 51 MVA, 3-ph, 60 Hz	2	0
4	Medium Voltage Transformer	Oil-filled	24 kV/4.16 kV, 31 MVA, 3-ph, 60 Hz	1	1
5	Low Voltage Transformer	Dry ventilated	4.16 kV/480 V, 5 MVA, 3-ph, 60 Hz	1	1
6	CTG Isolated Phase Bus Duct and Tap Bus	Aluminum, self-cooled	24 kV, 3-ph, 60 Hz	2	0
7	STG Isolated Phase Bus Duct and Tap Bus	Aluminum, self-cooled	24 kV, 3-ph, 60 Hz	1	0
8	Medium Voltage Switchgear	Metal clad	4.16 kV, 3-ph, 60 Hz	1	1
9	Low Voltage Switchgear	Metal enclosed	480 V, 3-ph, 60 Hz	1	1
10	Emergency Diesel Generator	Sized for emergency shutdown	750 kW, 480 V, 3-ph, 60 Hz	1	0

Case B4A – Account 12: Instrumentation and Control

Equipment No.	Description	Type	Design Condition	Operating Qty.	Spares
1	DCS - Main Control	Monitor/keyboard; Operator printer (laser color); Engineering printer (laser B&W)	Operator stations/printers and engineering stations/printers	1	0
2	DCS - Processor	Microprocessor with redundant input/output	N/A	1	0
3	DCS - Data Highway	Fiber optic	Fully redundant, 25% spare	1	0

3.3.7 Case B4A – Cost Estimating

The cost estimating methodology was described previously in Section 2.7. Exhibit 3-68 shows a detailed breakdown of the capital costs; Exhibit 3-69 shows the owner's costs, TOC, and TASC; Exhibit 3-70 shows the initial and annual O&M costs; and Exhibit 3-71 shows the LCOE breakdown.

The estimated TPC of the E-Gas™ gasifier with no CO_2 capture is $3,395/kW. Process contingency represents 4.5 percent of the TPC, and project contingency is 14.7 percent. The LCOE is $97.5/MWh.

Exhibit 3-68. Case B4A total plant cost details

Case:		B4A	– E-Gas™ IGCC w/o CO_2				Estimate Type:			Conceptual	
Plant Size (MW, net):		641					Cost Base:			Dec 2018	
Item No.	Description	Equipment Cost	Material Cost	Labor		Bare Erected Cost	Eng'g CM H.O.& Fee	Contingencies		Total Plant Cost	
				Direct	Indirect			Process	Project	$/1,000	$/kW
1						Coal Handling					
1.1	Coal Receive & Unload	$957	$0	$461	$0	$1,418	$213	$0	$326	$1,956	$3
1.2	Coal Stackout & Reclaim	$3,127	$0	$748	$0	$3,875	$581	$0	$891	$5,347	$8
1.3	Coal Conveyors & Yard Crush	$29,830	$0	$7,589	$0	$37,418	$5,613	$0	$8,606	$51,637	$81
1.4	Other Coal Handling	$4,645	$0	$1,046	$0	$5,691	$854	$0	$1,309	$7,854	$12
1.9	Coal & Sorbent Handling Foundations	$0	$84	$219	$0	$302	$45	$0	$70	$417	$1
	Subtotal	**$38,558**	**$84**	**$10,062**	**$0**	**$48,704**	**$7,306**	**$0**	**$11,202**	**$67,212**	**$105**
2						Coal Preparation & Feed					
2.1	Coal Crushing & Drying	$2,313	$139	$332	$0	$2,785	$418	$0	$640	$3,843	$6
2.2	Prepared Coal Storage & Feed	$7,104	$1,708	$1,101	$0	$9,912	$1,487	$0	$2,280	$13,679	$21
2.3	Slurry Coal Injection System	$6,953	$0	$3,050	$0	$10,003	$1,500	$0	$2,301	$13,804	$22
2.4	Miscellaneous Coal Preparation & Feed	$702	$513	$1,510	$0	$2,725	$409	$0	$627	$3,760	$6
2.9	Coal & Sorbent Feed Foundation	$0	$1,707	$1,465	$0	$3,172	$476	$0	$730	$4,377	$7
	Subtotal	**$17,072**	**$4,067**	**$7,458**	**$0**	**$28,596**	**$4,289**	**$0**	**$6,577**	**$39,463**	**$62**
3						Feedwater & Miscellaneous BOP Systems					
3.1	Feedwater System	$2,203	$3,777	$1,888	$0	$7,869	$1,180	$0	$1,810	$10,859	$17
3.2	Water Makeup & Pretreating	$4,666	$467	$2,644	$0	$7,776	$1,166	$0	$2,683	$11,625	$18
3.3	Other Feedwater Subsystems	$1,139	$373	$355	$0	$1,867	$280	$0	$429	$2,576	$4
3.4	Service Water Systems	$1,394	$2,662	$8,619	$0	$12,675	$1,901	$0	$4,373	$18,949	$30
3.5	Other Boiler Plant Systems	$296	$108	$269	$0	$672	$101	$0	$155	$928	$1
3.6	Natural Gas Pipeline and Start-Up System	$7,156	$308	$231	$0	$7,695	$1,154	$0	$1,770	$10,618	$17
3.7	Waste Water Treatment Equipment	$6,687	$0	$4,098	$0	$10,785	$1,618	$0	$3,721	$16,124	$25
3.8	Vacuum Flash, Brine Concentrator, & Crystallizer	$24,262	$0	$15,029	$0	$39,291	$5,894	$0	$13,555	$58,740	$92
3.9	Miscellaneous Plant Equipment	$15,238	$1,998	$7,744	$0	$24,981	$3,747	$0	$8,618	$37,346	$58
	Subtotal	**$63,040**	**$9,692**	**$40,877**	**$0**	**$113,610**	**$17,041**	**$0**	**$37,114**	**$167,765**	**$262**
4						Gasifier, ASU, & Accessories					
4.1	Gasifier & Auxiliaries (E-GAS)	$371,379	$0	$207,402	$0	$578,781	$86,817	$81,029	$111,994	$858,622	$1,340
4.2	Syngas Cooler	$50,342	$0	$28,114	$0	$78,456	$11,768	$10,984	$15,181	$116,389	$182
4.3	Air Separation Unit/Oxidant Compression	$52,127	$0	$19,804	$0	$71,932	$10,790	$0	$12,408	$95,129	$148
4.5	Miscellaneous Gasification Equipment	$3,787	$0	$2,115	$0	$5,901	$885	$0	$1,018	$7,805	$12
4.6	Low Temperature Heat Recovery & Flue Gas Saturation	$44,443	$0	$16,885	$0	$61,328	$9,199	$0	$14,105	$84,632	$132
4.7	Flare Stack System	$1,878	$0	$331	$0	$2,210	$331	$0	$508	$3,049	$5
4.15	Major Component Rigging	$211	$0	$118	$0	$328	$49	$0	$57	$434	$1
4.16	Gasification Foundations	$0	$465	$277	$0	$742	$111	$0	$213	$1,066	$2
	Subtotal	**$524,167**	**$465**	**$275,046**	**$0**	**$799,678**	**$119,952**	**$92,013**	**$155,485**	**$1,167,128**	**$1,821**

Case:	B4A	– E-Gas™ IGCC w/o CO_2					Estimate Type:			Conceptual	
Plant Size (MW, net):	641						Cost Base:			Dec 2018	
Item No.	Description	Equipment Cost	Material Cost	Labor Direct	Labor Indirect	Bare Erected Cost	Eng'g CM H.O.& Fee	Contingencies Process	Contingencies Project	Total Plant Cost $/1,000	Total Plant Cost $/kW
5						Syngas Cleanup					
5.2	Methyldiethanolamine (MDEA) - Low Temperature Acid Gas Removal	$5,162	$0	$4,350	$0	$9,512	$1,427	$0	$2,188	$13,127	$20
5.3	Elemental Sulfur Plant	$46,692	$9,101	$59,831	$0	$115,623	$17,344	$0	$26,593	$159,560	$249
5.6	Mercury Removal (Carbon Bed)	$211	$0	$159	$0	$370	$55	$18	$89	$532	$1
5.8	Carbonyl Sulfide (COS) Hydrolysis	$9,651	$0	$12,517	$0	$22,168	$3,325	$0	$5,099	$30,592	$48
5.9	Particulate Removal	$1,378	$0	$591	$0	$1,969	$295	$0	$340	$2,604	$4
5.10	Blowback Gas Systems	$751	$422	$235	$0	$1,407	$211	$0	$324	$1,942	$3
5.11	Fuel Gas Piping	$0	$2,858	$1,870	$0	$4,728	$709	$0	$1,087	$6,524	$10
5.12	Gas Cleanup Foundations	$0	$216	$146	$0	$362	$54	$0	$125	$541	$1
	Subtotal	**$63,844**	**$12,596**	**$79,700**	**$0**	**$156,140**	**$23,421**	**$18**	**$35,844**	**$215,424**	**$336**
6						Combustion Turbine & Accessories					
6.1	Combustion Turbine Generator	$74,944	$0	$5,399	$0	$80,343	$12,051	$4,017	$14,462	$110,873	$173
6.3	Combustion Turbine Accessories	$2,687	$0	$164	$0	$2,851	$428	$0	$492	$3,770	$6
6.4	Compressed Air Piping	$0	$509	$333	$0	$843	$126	$0	$194	$1,163	$2
6.5	Combustion Turbine Foundations	$0	$216	$250	$0	$466	$70	$0	$161	$697	$1
	Subtotal	**$77,632**	**$726**	**$6,146**	**$0**	**$84,503**	**$12,675**	**$4,017**	**$15,308**	**$116,504**	**$182**
7						HRSG, Ductwork, & Stack					
7.1	Heat Recovery Steam Generator	$35,914	$0	$6,955	$0	$42,869	$6,430	$0	$7,395	$56,695	$88
7.2	Heat Recovery Steam Generator Accessories	$12,824	$0	$2,483	$0	$15,307	$2,296	$0	$2,640	$20,243	$32
7.3	Ductwork	$0	$1,085	$761	$0	$1,846	$277	$0	$425	$2,547	$4
7.4	Stack	$9,225	$0	$3,441	$0	$12,667	$1,900	$0	$2,185	$16,752	$26
7.5	Heat Recovery Steam Generator, Ductwork & Stack Foundations	$0	$230	$230	$0	$460	$69	$0	$159	$688	$1
	Subtotal	**$57,963**	**$1,315**	**$13,870**	**$0**	**$73,149**	**$10,972**	**$0**	**$12,804**	**$96,924**	**$151**
8						Steam Turbine & Accessories					
8.1	Steam Turbine Generator & Accessories	$39,518	$0	$6,029	$0	$45,547	$6,832	$0	$7,857	$60,236	$94
8.2	Steam Turbine Plant Auxiliaries	$1,922	$0	$4,375	$0	$6,297	$945	$0	$1,086	$8,328	$13
8.3	Condenser & Auxiliaries	$7,195	$0	$4,065	$0	$11,260	$1,689	$0	$1,942	$14,892	$23
8.4	Steam Piping	$7,418	$0	$3,217	$0	$10,635	$1,595	$0	$3,057	$15,287	$24
8.5	Turbine Generator Foundations	$0	$299	$528	$0	$828	$124	$0	$286	$1,237	$2
	Subtotal	**$56,053**	**$299**	**$18,214**	**$0**	**$74,567**	**$11,185**	**$0**	**$14,229**	**$99,981**	**$156**
9						Cooling Water System					
9.1	Cooling Towers	$10,618	$0	$3,228	$0	$13,846	$2,077	$0	$2,388	$18,312	$29
9.2	Circulating Water Pumps	$1,386	$0	$99	$0	$1,485	$223	$0	$256	$1,964	$3
9.3	Circulating Water System Auxiliaries	$9,618	$0	$1,358	$0	$10,976	$1,646	$0	$1,893	$14,515	$23
9.4	Circulating Water Piping	$0	$5,432	$4,919	$0	$10,352	$1,553	$0	$2,381	$14,285	$22
9.5	Make-up Water System	$566	$0	$777	$0	$1,342	$201	$0	$309	$1,852	$3
9.6	Component Cooling Water System	$196	$235	$161	$0	$592	$89	$0	$136	$816	$1
9.7	Circulating Water System Foundations	$0	$450	$799	$0	$1,249	$187	$0	$431	$1,867	$3

Case:	B4A	– E-Gas™ IGCC w/o CO_2					Estimate Type:			Conceptual	
Plant Size (MW, net):	641						Cost Base:			Dec 2018	
Item No.	Description	Equipment Cost	Material Cost	Labor Direct	Labor Indirect	Bare Erected Cost	Eng'g CM H.O.& Fee	Contingencies Process	Contingencies Project	Total Plant Cost $/1,000	Total Plant Cost $/kW
	Subtotal	**$22,384**	**$6,116**	**$11,341**	**$0**	**$39,841**	**$5,976**	**$0**	**$7,794**	**$53,612**	**$84**
10						Slag Recovery & Handling					
10.1	Slag Dewatering & Cooling	$1,928	$0	$944	$0	$2,872	$431	$0	$495	$3,798	$6
10.2	Gasifier Ash Depressurization	$1,092	$0	$535	$0	$1,627	$244	$0	$281	$2,152	$3
10.3	Cleanup Ash Depressurization	$491	$0	$240	$0	$731	$110	$0	$126	$967	$2
10.6	Ash Storage Silos	$1,100	$0	$1,190	$0	$2,289	$343	$0	$395	$3,027	$5
10.7	Ash Transport & Feed Equipment	$424	$0	$99	$0	$523	$78	$0	$90	$692	$1
10.8	Miscellaneous Ash Handling Equipment	$61	$74	$22	$0	$157	$24	$0	$27	$208	$0
10.9	Ash/Spent Sorbent Foundation	$0	$430	$571	$0	$1,001	$150	$0	$346	$1,497	$2
	Subtotal	**$5,096**	**$505**	**$3,601**	**$0**	**$9,202**	**$1,380**	**$0**	**$1,760**	**$12,342**	**$19**
11						Accessory Electric Plant					
11.1	Generator Equipment	$2,833	$0	$2,137	$0	$4,969	$745	$0	$857	$6,572	$10
11.2	Station Service Equipment	$3,526	$0	$303	$0	$3,829	$574	$0	$660	$5,064	$8
11.3	Switchgear & Motor Control	$21,279	$0	$3,692	$0	$24,970	$3,746	$0	$4,307	$33,023	$52
11.4	Conduit & Cable Tray	$0	$94	$272	$0	$366	$55	$0	$105	$526	$1
11.5	Wire & Cable	$0	$1,291	$2,308	$0	$3,599	$540	$0	$1,035	$5,173	$8
11.6	Protective Equipment	$241	$0	$837	$0	$1,078	$162	$0	$186	$1,426	$2
11.7	Standby Equipment	$864	$0	$797	$0	$1,661	$249	$0	$287	$2,197	$3
11.8	Main Power Transformers	$6,557	$0	$134	$0	$6,691	$1,004	$0	$1,154	$8,849	$14
11.9	Electrical Foundations	$0	$76	$192	$0	$268	$40	$0	$92	$400	$1
	Subtotal	**$35,299**	**$1,461**	**$10,671**	**$0**	**$47,431**	**$7,115**	**$0**	**$8,684**	**$63,230**	**$99**
12						Instrumentation & Control					
12.1	Integrated Gasification and Combined Cycle Control Equipment	$605	$0	$338	$0	$943	$141	$0	$163	$1,247	$2
12.2	Combustion Turbine Control Equipment	$650	$0	$47	$0	$697	$105	$0	$120	$921	$1
12.3	Steam Turbine Control Equipment	$601	$0	$92	$0	$693	$104	$0	$119	$916	$1
12.4	Other Major Component Control Equipment	$1,161	$0	$791	$0	$1,953	$293	$98	$351	$2,695	$4
12.5	Signal Processing Equipment	$901	$0	$29	$0	$930	$140	$0	$160	$1,230	$2
12.6	Control Boards, Panels & Racks	$261	$0	$170	$0	$431	$65	$22	$104	$621	$1
12.7	Distributed Control System Equipment	$9,454	$0	$309	$0	$9,764	$1,465	$488	$1,757	$13,474	$21
12.8	Instrument Wiring & Tubing	$470	$376	$1,505	$0	$2,352	$353	$118	$706	$3,528	$6
12.9	Other Instrumentation & Controls Equipment	$1,055	$0	$523	$0	$1,578	$237	$79	$284	$2,178	$3
	Subtotal	**$15,160**	**$376**	**$3,805**	**$0**	**$19,342**	**$2,901**	**$804**	**$3,765**	**$26,812**	**$42**
13						Improvements to Site					
13.1	Site Preparation	$0	$416	$9,412	$0	$9,827	$1,474	$0	$3,390	$14,692	$23
13.2	Site Improvements	$0	$1,870	$2,644	$0	$4,514	$677	$0	$1,557	$6,748	$11
13.3	Site Facilities	$2,920	$0	$3,278	$0	$6,197	$930	$0	$2,138	$9,265	$14
	Subtotal	**$2,920**	**$2,286**	**$15,333**	**$0**	**$20,538**	**$3,081**	**$0**	**$7,086**	**$30,705**	**$48**

Case:		B4A	– E-Gas™ IGCC w/o CO_2				Estimate Type:			Conceptual	
Plant Size (MW, net):		641					Cost Base:			Dec 2018	
Item No.	Description	Equipment Cost	Material Cost	Labor		Bare Erected Cost	Eng'g CM H.O.& Fee	Contingencies		Total Plant Cost	
				Direct	Indirect			Process	Project	$/1,000	$/kW
14						Buildings & Structures					
14.1	Combustion Turbine Area	$0	$314	$177	$0	$491	$74	$0	$85	$649	$1
14.3	Steam Turbine Building	$0	$2,783	$3,962	$0	$6,746	$1,012	$0	$1,164	$8,921	$14
14.4	Administration Building	$0	$885	$642	$0	$1,527	$229	$0	$263	$2,020	$3
14.5	Circulation Water Pumphouse	$0	$136	$72	$0	$208	$31	$0	$36	$275	$0
14.6	Water Treatment Buildings	$0	$311	$303	$0	$614	$92	$0	$106	$811	$1
14.7	Machine Shop	$0	$490	$335	$0	$825	$124	$0	$142	$1,091	$2
14.8	Warehouse	$0	$382	$247	$0	$628	$94	$0	$108	$831	$1
14.9	Other Buildings & Structures	$0	$280	$217	$0	$497	$75	$0	$86	$657	$1
14.10	Waste Treating Building & Structures	$0	$751	$1,434	$0	$2,185	$328	$0	$377	$2,890	$5
	Subtotal	**$0**	**$6,331**	**$7,390**	**$0**	**$13,721**	**$2,058**	**$0**	**$2,367**	**$18,146**	**$28**
	Total	**$979,189**	**$46,318**	**$503,514**	**$0**	**$1,529,021**	**$229,353**	**$96,853**	**$320,019**	**$2,175,246**	**$3,395**

Exhibit 3-69. Case B4A owner's costs

Description	$/1,000	$/kW
Pre-Production Costs		
6 Months All Labor	$18,659	$29
1 Month Maintenance Materials	$4,418	$7
1 Month Non-Fuel Consumables	$770	$1
1 Month Waste Disposal	$688	$1
25% of 1 Months Fuel Cost at 100% CF	$2,164	$3
2% of TPC	$43,505	$68
Total	**$70,204**	**$110**
Inventory Capital		
60-day supply of fuel and consumables at 100% CF	$18,485	$29
0.5% of TPC (spare parts)	$10,876	$17
Total	**$29,361**	**$46**
Other Costs		
Initial Cost for Catalyst and Chemicals	$3,115	$5
Land	$900	$1
Other Owner's Costs	$326,287	$509
Financing Costs	$58,732	$92
Total Overnight Costs (TOC)	**$2,663,845**	**$4,157**
TASC Multiplier (IOU, 35 year)	1.154	
Total As-Spent Cost (TASC)	**$3,075,174**	**$4,799**

Exhibit 3-70. Case B4A initial and annual operating and maintenance costs

Case:	B4A	– E-Gas™ IGCC w/o CO_2			Cost Base:	Dec 2018
Plant Size (MW, net):	641	Heat Rate-net (Btu/kWh):		8,308	Capacity Factor (%):	80
Operating & Maintenance Labor						
Operating Labor				**Operating Labor Requirements per Shift**		
Operating Labor Rate (base):		38.50	**$/hour**	Skilled Operator:		2.0
Operating Labor Burden:		30.00	**% of base**	Operator:		10.0
Labor O-H Charge Rate:		25.00	**% of labor**	Foreman:		1.0
				Lab Techs, etc.:		3.0
				Total:		**16.0**
Fixed Operating Costs						
					Annual Cost	
					($)	**($/kW-net)**
Annual Operating Labor:					$7,015,008	$10.948
Maintenance Labor:					$22,840,081	$35.644
Administrative & Support Labor:					$7,463,772	$11.648
Property Taxes and Insurance:					$43,504,916	$67.894
Total:					**$80,823,777**	**$126.133**
Variable Operating Costs						
					($)	**($/MWh-net)**
Maintenance Material:					$42,417,293	$9.44583
Consumables						
	Initial Fill	**Per Day**	**Per Unit**	**Initial Fill**		
Water (gal/1000):	0	3,137	$1.90	$0	$1,740,388	$0.38756
Makeup and Waste Water Treatment Chemicals (ton):	0	9.34	$550.00	$0	$1,500,739	$0.33420
Sulfur-Impregnated Activated Carbon (ton):	64.7	0.089	$12,000.00	$775,814	$310,326	$0.06911
COS Hydrolysis Catalyst (ft^3):	1,733	1.19	$1,300.00	$2,253,455	$450,691	$0.10036
Methyldiethanolamine Solution (gal):	30,614	38.3	$2.80	$85,720	$31,341	$0.00698
Sodium Hydroxide (50 wt%, ton):	0	18.9	$600.00	$0	$3,308,882	$0.73685
Sulfuric Acid (98 wt%, ton):	0	0.335	$210.00	$0	$20,560	$0.00458
Claus Catalyst (ft^3):	w/equip.	1.89	$48.00	$0	$26,496	$0.00590
Subtotal:				**$3,114,989**	**$7,389,422**	**$1.64554**
Waste Disposal						
Sulfur-Impregnated Activated Carbon (ton):	0	0.089	$80.00	$0	$2,069	$0.00046
COS Hydrolysis Catalyst (ft^3):	0	1.19	$2.50	$0	$867	$0.00019
MDEA Solution (gal):	0	38.3	$0.35	$0	$3,918	$0.00087
Claus Catalyst (ft^3):	0	1.89	$2.50	$0	$1,380	$0.00031
Crystallizer Solids (ton):	0	35.7	$38.00	$0	$395,907	$0.08816
Slag (ton):	0	559	$38.00	$0	$6,201,712	$1.38105
Subtotal:				**$0**	**$6,605,853**	**$1.47104**
By-Products						
Sulfur (tons):	0	136	$0.00	$0	$0	$0.00000
Subtotal:				**$0**	**$0**	**$0.00000**
Variable Operating Costs Total:				**$3,114,989**	**$56,412,568**	**$12.56241**
Fuel Cost						
Illinois Number 6 (ton):	0	5,476	$51.96	$0	$83,079,249	$18.50076
Total:				**$0**	**$83,079,249**	**$18.50076**

Exhibit 3-71. Case B4A LCOE breakdown

Component	Value, $/MWh	Percentage
Capital	48.4	50%
Fixed	18.0	18%
Variable	12.6	13%
Fuel	18.5	19%
Total (Excluding T&S)	**97.5**	**N/A**
CO_2 T&S	0.0	0%
Total (Including T&S)	**97.5**	**N/A**

3.3.8 Case B4B – E-Gas™ IGCC Power Plant with CO_2 Capture

In this section, the E-Gas™ gasification process for Case B4B is described. The plant configuration is nearly identical to that of Case B4A, with the exception that this case is configured to produce electric power with CO_2 capture.

The gross power output is constrained by the capacity of the two CTs, and since the CO_2 capture and compression process increases the auxiliary load on the plant, the net output is significantly reduced relative to Case B4A (557 MW versus 641 MW).

The process descriptions for Case B4B are similar to Case B4A with several notable exceptions to accommodate CO_2 capture. The system descriptions follow the BFD provided in Exhibit 3-72 with the associated stream tables—providing process data for the numbered streams in the BFD—provided in Exhibit 3-73. Rather than repeating the entire process description, only differences from Case B4A are reported here.

3.3.8.1 Coal Preparation and Feed Systems

No differences from Case B4A.

3.3.8.2 Gasifier

There are no differences from the gasifier design presented in Case B4A. However, since the E-Gas™ gasifier produces higher amounts of methane, Case B4B is operated at a higher O_2:coal ratio than B4A (0.738 in B4B versus 0.683 in B4A), which facilitates achieving a carbon capture rate of 90 percent.

Exhibit 3-72. Case B4B block flow diagram, E-Gas™ IGCC with CO_2 capture

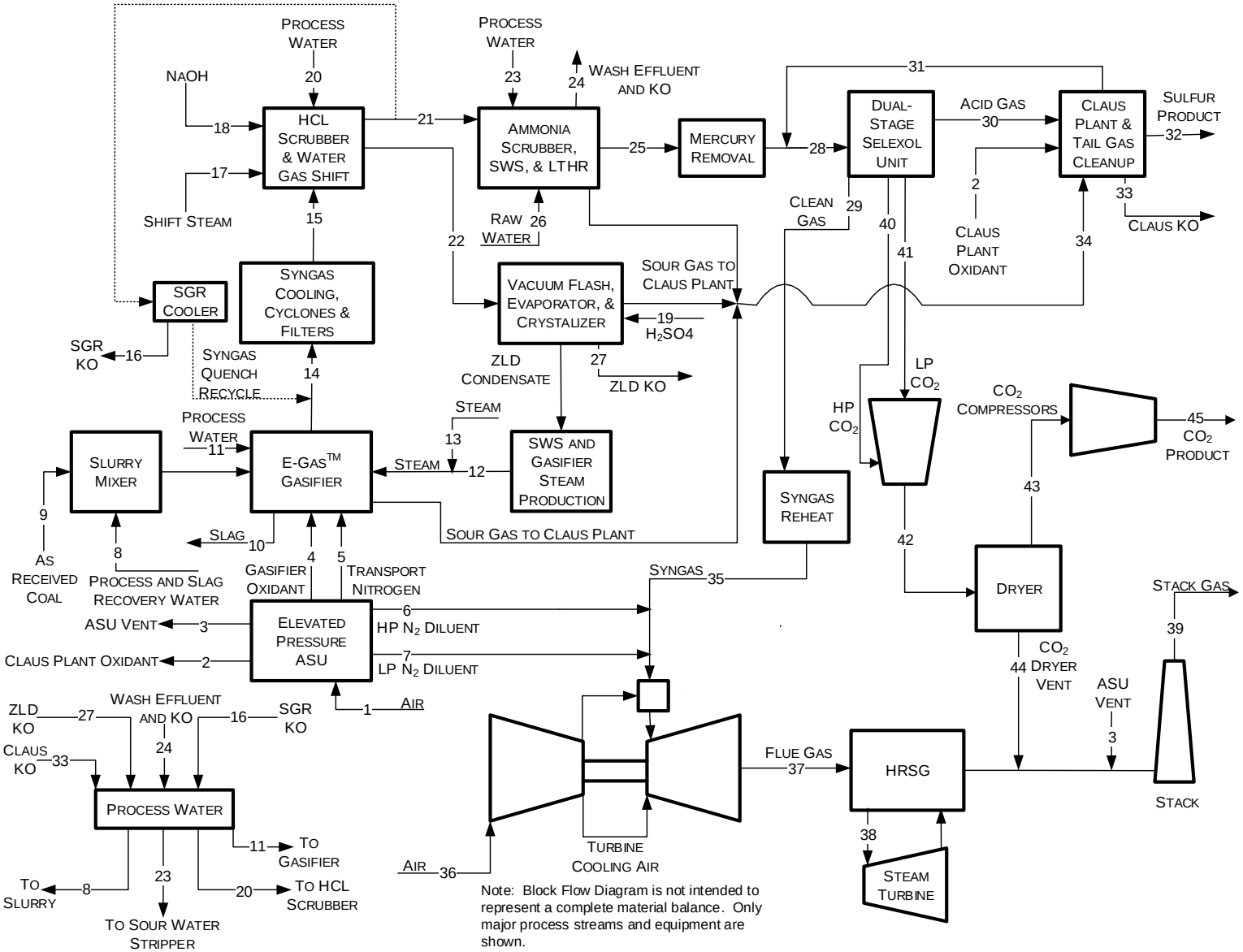

Note: Block Flow Diagram is not intended to represent a complete material balance. Only major process streams and equipment are shown.

Exhibit 3-73. Case B4B stream table, E-Gas™ IGCC with capture

	1	2	3	4	5	6	7	8	9	10	11	12
V-L Mole Fraction												
Ar	0.0092	0.0343	0.1077	0.0343	0.0000	0.0000	0.0000	0.0000	0.0000	0.0000	0.0000	0.0000
CH_4	0.0000	0.0000	0.0000	0.0000	0.0000	0.0000	0.0000	0.0000	0.0000	0.0000	0.0000	0.0000
CO	0.0000	0.0000	0.0000	0.0000	0.0000	0.0000	0.0000	0.0000	0.0000	0.0000	0.0000	0.0000
CO_2	0.0003	0.0000	0.0189	0.0000	0.0000	0.0000	0.0000	0.0008	0.0000	0.0000	0.0010	0.0000
COS	0.0000	0.0000	0.0000	0.0000	0.0000	0.0000	0.0000	0.0000	0.0000	0.0000	0.0000	0.0000
H_2	0.0000	0.0000	0.0000	0.0000	0.0000	0.0000	0.0000	0.0000	0.0000	0.0000	0.0000	0.0000
H_2O	0.0099	0.0000	0.3906	0.0000	0.0000	0.0000	0.0000	0.9809	0.0000	0.0000	0.9806	0.9998
HCl	0.0000	0.0000	0.0000	0.0000	0.0000	0.0000	0.0000	0.0000	0.0000	0.0000	0.0000	0.0000
H_2S	0.0000	0.0000	0.0000	0.0000	0.0000	0.0000	0.0000	0.0001	0.0000	0.0000	0.0001	0.0000
N_2	0.7732	0.0157	0.4811	0.0157	0.9964	0.9964	0.9964	0.0000	0.0000	0.0000	0.0000	0.0000
NH_3	0.0000	0.0000	0.0000	0.0000	0.0000	0.0000	0.0000	0.0182	0.0000	0.0000	0.0182	0.0002
O_2	0.2074	0.9501	0.0017	0.9501	0.0036	0.0036	0.0036	0.0000	0.0000	0.0000	0.0000	0.0000
SO_2	0.0000	0.0000	0.0000	0.0000	0.0000	0.0000	0.0000	0.0000	0.0000	0.0000	0.0000	0.0000
NaCl	0.0000	0.0000	0.0000	0.0000	0.0000	0.0000	0.0000	0.0000	0.0000	0.0000	0.0000	0.0000
NaOH	0.0000	0.0000	0.0000	0.0000	0.0000	0.0000	0.0000	0.0000	0.0000	0.0000	0.0000	0.0000
Total	1.0000	1.0000	1.0000	1.0000	1.0000	1.0000	1.0000	1.0000	0.0000	0.0000	1.0000	1.0000
V-L Flowrate (kg_{mol}/hr)	25,139	104	434	5,311	228	8,009	10,974	4,986	0	0	1,281	2,904
V-L Flowrate (kg/hr)	725,437	3,339	11,166	171,067	6,396	224,465	307,590	89,846	0	0	23,096	52,315
Solids Flowrate (kg/hr)	0	0	0	0	0	0	0	0	218,710	22,323	0	0
Temperature (°C)	15	27	26	27	130	196	196	148	15	1,038	148	343
Pressure (MPa, abs)	0.10	0.86	0.45	5.10	5.62	3.24	2.69	5.79	0.10	4.24	5.79	5.10
Steam Table Enthalpy (kJ/kg)[A]	30.23	21.53	23.80	9.82	129.22	202.25	202.61	590.25	---	---	589.80	3,083.36
AspenPlus Enthalpy (kJ/kg)[B]	-97.58	-0.97	-4,654.65	-12.68	103.25	176.29	176.64	-15,134.95	-2,119.02	1,005.43	-15,129.93	-12,884.30
Density (kg/m^3)	1.2	11.2	7.6	68.6	46.4	23.1	19.2	876.5	---	---	875.4	19.9
V-L Molecular Weight	28.857	32.209	25.703	32.209	28.028	28.028	28.028	18.020	---	---	18.028	18.015
V-L Flowrate (lb_{mol}/hr)	55,422	229	958	11,709	503	17,656	24,195	10,992	0	0	2,824	6,402
V-L Flowrate (lb/hr)	1,599,314	7,362	24,617	377,139	14,100	494,860	678,120	198,077	0	0	50,918	115,334
Solids Flowrate (lb/hr)	0	0	0	0	0	0	0	0	482,173	49,214	0	0
Temperature (°F)	59	80	78	80	267	385	385	298	59	1,900	298	650
Pressure (psia)	14.7	125.0	65.0	740.0	815.0	470.0	390.0	840.0	14.7	615.0	840.0	740.0
Steam Table Enthalpy (Btu/lb)[A]	13.0	9.3	10.2	4.2	55.6	87.0	87.1	253.8	---	---	253.6	1,325.6
AspenPlus Enthalpy (Btu/lb)[B]	-42.0	-0.4	-2,001.1	-5.5	44.4	75.8	75.9	-6,506.9	-911.0	432.3	-6,504.7	-5,539.3
Density (lb/ft^3)	0.076	0.700	0.472	4.283	2.894	1.439	1.196	54.721	---	---	54.651	1.240

[A]Steam table reference conditions are 32.02°F & 0.089 psia

[B]Aspen thermodynamic reference state is the component's constituent elements in an ideal gas state at 25°C and 1 atm

Exhibit 3-73. Case B4B stream table, E-Gas™ IGCC with capture (continued)

	13	14	15	16	17	18	19	20	21	22	23	24
V-L Mole Fraction												
Ar	0.0000	0.0064	0.0064	0.0000	0.0000	0.0000	0.0000	0.0000	0.0054	0.0000	0.0000	0.0000
CH_4	0.0000	0.0158	0.0158	0.0000	0.0000	0.0000	0.0000	0.0000	0.0133	0.0000	0.0000	0.0000
CO	0.0000	0.2342	0.2342	0.0000	0.0000	0.0000	0.0000	0.0000	0.0055	0.0001	0.0000	0.0000
CO_2	0.0000	0.1544	0.1544	0.0054	0.0000	0.0000	0.0000	0.0010	0.3216	0.0010	0.0010	0.0010
COS	0.0000	0.0002	0.0002	0.0000	0.0000	0.0000	0.0000	0.0000	0.0000	0.0000	0.0000	0.0000
H_2	0.0000	0.2846	0.2846	0.0003	0.0000	0.0000	0.0000	0.0000	0.4309	0.0002	0.0000	0.0000
H_2O	1.0000	0.2788	0.2788	0.9676	1.0000	0.6895	0.1000	0.9806	0.2005	0.9925	0.9806	0.9801
HCl	0.0000	0.0003	0.0003	0.0001	0.0000	0.0000	0.0000	0.0000	0.0000	0.0000	0.0000	0.0000
H_2S	0.0000	0.0058	0.0058	0.0003	0.0000	0.0000	0.0000	0.0001	0.0051	0.0001	0.0001	0.0001
N_2	0.0000	0.0130	0.0130	0.0000	0.0000	0.0000	0.0000	0.0000	0.0110	0.0000	0.0000	0.0000
NH_3	0.0000	0.0063	0.0063	0.0264	0.0000	0.0000	0.0000	0.0182	0.0068	0.0036	0.0182	0.0187
O_2	0.0000	0.0000	0.0000	0.0000	0.0000	0.0000	0.0000	0.0000	0.0000	0.0000	0.0000	0.0000
SO_2	0.0000	0.0000	0.0000	0.0000	0.0000	0.0000	0.0000	0.0000	0.0000	0.0000	0.0000	0.0000
NaCl	0.0000	0.0000	0.0000	0.0000	0.0000	0.0000	0.0000	0.0000	0.0000	0.0026	0.0000	0.0000
NaOH	0.0000	0.0000	0.0000	0.0000	0.0000	0.3105	0.0000	0.0000	0.0000	0.0001	0.0000	0.0000
Total	1.0000	1.0000	1.0000	1.0000	1.0000	1.0000	0.1000	1.0000	1.0000	1.0000	1.0000	1.0000
V-L Flowrate (kg_{mol}/hr)	2,031	30,347	30,347	459	5,634	30	0	3,669	33,842	3,601	3,901	12,958
V-L Flowrate (kg/hr)	36,594	611,703	611,698	8,314	101,491	754	13	66,140	670,445	65,323	70,320	233,605
Solids Flowrate (kg/hr)	0	0	0	0	0	0	0	0	0	0	0	0
Temperature (°C)	343	984	232	41	288	16	15	65	228	180	65	68
Pressure (MPa, abs)	5.10	4.24	3.93	3.42	3.83	4.76	0.13	0.47	3.44	3.83	0.47	0.45
Steam Table Enthalpy (kJ/kg)[A]	3,093.81	2,398.07	982.99	114.41	2,972.92	-338.83	-8,206.86	233.68	835.84	750.05	233.68	243.68
AspenPlus Enthalpy (kJ/kg)[B]	-12,886.48	-5,990.05	-7,405.13	-15,427.11	-13,007.37	-13,665.04	-8,526.27	-15,486.05	-8,597.55	-15,080.76	-15,486.05	-15,470.28
Density (kg/m^3)	19.9	8.1	19.1	973.4	16.6	1,531.7	1,791.5	966.2	16.5	882.4	966.2	964.1
V-L Molecular Weight	18.015	20.157	20.157	18.131	18.015	24.842	90.073	18.028	19.811	18.142	18.028	18.028
V-L Flowrate (lb_{mol}/hr)	4,478	66,903	66,903	1,011	12,420	67	0	8,088	74,609	7,938	8,600	28,568
V-L Flowrate (lb/hr)	80,676	1,348,575	1,348,563	18,329	223,748	1,663	30	145,813	1,478,078	144,012	155,030	515,011
Solids Flowrate (lb/hr)	0	0	0	0	0	0	0	0	0	0	0	0
Temperature (°F)	650	1,804	450	105	550	61	59	149	442	356	149	154
Pressure (psia)	740.0	615.0	570.2	496.0	555.3	690.2	18.2	67.7	499.5	555.3	67.7	65.0
Steam Table Enthalpy (Btu/lb)[A]	1,330.1	1,031.0	422.6	49.2	1,278.1	-145.7	-3,528.3	100.5	359.3	322.5	100.5	104.8
AspenPlus Enthalpy (Btu/lb)[B]	-5,540.2	-2,575.3	-3,183.6	-6,632.5	-5,592.2	-5,874.9	-3,665.6	-6,657.8	-3,696.3	-6,483.6	-6,657.8	-6,651.0
Density (lb/ft^3)	1.240	0.507	1.191	60.765	1.039	95.621	111.841	60.318	1.030	55.088	60.318	60.189

[A]Steam table reference conditions are 32.02°F & 0.089 psia

[B]Aspen thermodynamic reference state is the component's constituent elements in an ideal gas state at 25°C and 1 atm

Exhibit 3-73. Case B4B stream table, E-Gas™ IGCC with capture (continued)

	25	26	27	28	29	30	31	32	33	34	35	36
V-L Mole Fraction												
Ar	0.0068	0.0000	0.0000	0.0068	0.0114	0.0000	0.0094	0.0000	0.0000	0.0004	0.0114	0.0092
CH_4	0.0168	0.0000	0.0000	0.0165	0.0258	0.0018	0.0000	0.0000	0.0000	0.0009	0.0258	0.0000
CO	0.0069	0.0000	0.0000	0.0069	0.0113	0.0003	0.0052	0.0000	0.0000	0.0022	0.0113	0.0000
CO_2	0.4040	0.0000	0.0009	0.4072	0.0318	0.5124	0.6314	0.0000	0.0000	0.3100	0.0318	0.0003
COS	0.0000	0.0000	0.0000	0.0000	0.0000	0.0009	0.0000	0.0000	0.0000	0.0000	0.0000	0.0000
H_2	0.5438	0.0000	0.0000	0.5396	0.8945	0.0109	0.2460	0.0000	0.0000	0.0238	0.8945	0.0000
H_2O	0.0016	0.9999	0.9825	0.0016	0.0001	0.0211	0.0024	0.0000	1.0000	0.1913	0.0001	0.0099
HCl	0.0000	0.0000	0.0000	0.0000	0.0000	0.0000	0.0000	0.0000	0.0000	0.0000	0.0000	0.0000
H_2S	0.0063	0.0000	0.0002	0.0063	0.0000	0.4518	0.0049	0.0000	0.0000	0.0126	0.0000	0.0000
N_2	0.0138	0.0000	0.0000	0.0151	0.0251	0.0001	0.1007	0.0000	0.0000	0.0004	0.0251	0.7732
NH_3	0.0000	0.0000	0.0164	0.0000	0.0000	0.0006	0.0000	0.0000	0.0000	0.4584	0.0000	0.0000
O_2	0.0000	0.0000	0.0000	0.0000	0.0000	0.0000	0.0000	0.0000	0.0000	0.0000	0.0000	0.2074
SO_2	0.0000	0.0000	0.0000	0.0000	0.0000	0.0000	0.0000	0.0000	0.0000	0.0000	0.0000	0.0000
NaCl	0.0000	0.0001	0.0000	0.0000	0.0000	0.0000	0.0000	0.0000	0.0000	0.0000	0.0000	0.0000
NaOH	0.0000	0.0000	0.0000	0.0000	0.0000	0.0000	0.0000	0.0000	0.0000	0.0000	0.0000	0.0000
Total	1.0000	1.0000	1.0000	1.0000	1.0000	1.0000	1.0000	0.0000	1.0000	1.0000	1.0000	1.0000
V-L Flowrate (kg_{mol}/hr)	26,808	1,707	646	27,193	16,315	377	385	0	234	161	16,315	110,253
V-L Flowrate (kg/hr)	542,592	30,759	11,654	554,834	83,064	14,508	12,243	0	4,222	4,099	83,064	3,181,556
Solids Flowrate (kg/hr)	0	0	0	0	0	0	0	5,481	0	0	0	0
Temperature (°C)	29	15	30	37	18	27	38	184	50	166	193	15
Pressure (MPa, abs)	3.14	0.10	0.24	3.03	2.85	0.18	3.03	0.12	0.11	0.45	2.68	0.10
Steam Table Enthalpy (kJ/kg)[A]	37.28	62.75	90.09	48.52	104.06	40.92	24.17	---	110.26	574.81	1,129.86	30.23
AspenPlus Enthalpy (kJ/kg)[B]	-7,984.48	-15,905.25	-15,654.29	-7,969.95	-3,125.68	-5,633.14	-7,848.90	147.53	-15,859.68	-7,250.11	-2,099.87	-97.58
Density (kg/m^3)	25.8	999.4	985.6	24.4	5.9	2.9	39.9	5,266.5	968.6	3.2	3.5	1.2
V-L Molecular Weight	20.240	18.019	18.027	20.404	5.091	38.457	31.836	---	18.016	25.476	5.091	28.857
V-L Flowrate (lb_{mol}/hr)	59,103	3,763	1,425	59,950	35,968	832	848	0	517	355	35,968	243,065
V-L Flowrate (lb/hr)	1,196,210	67,811	25,692	1,223,200	183,125	31,985	26,990	0	9,309	9,036	183,125	7,014,130
Solids Flowrate (lb/hr)	0	0	0	0	0	0	0	12,084	0	0	0	0
Temperature (°F)	84	59	85	99	65	80	100	364	122	330	380	59
Pressure (psia)	454.7	14.7	35.0	439.4	413.2	26.7	439.4	16.8	15.9	65.0	388.9	14.7
Steam Table Enthalpy (Btu/lb)[A]	16.0	27.0	38.7	20.9	44.7	17.6	10.4	---	47.4	247.1	485.8	13.0
AspenPlus Enthalpy (Btu/lb)[B]	-3,432.7	-6,838.0	-6,730.1	-3,426.5	-1,343.8	-2,421.8	-3,374.4	63.4	-6,818.4	-3,117.0	-902.8	-42.0
Density (lb/ft^3)	1.609	62.391	61.529	1.526	0.369	0.180	2.488	328.777	60.467	0.198	0.218	0.076

[A]Steam table reference conditions are 32.02°F & 0.089 psia

[B]Aspen thermodynamic reference state is the component's constituent elements in an ideal gas state at 25°C and 1 atm

Exhibit 3-73. Case B4B stream table, E-Gas™ IGCC with capture (continued)

	37	38	39	40	41	42	43	44	45
V-L Mole Fraction									
Ar	0.0087	0.0000	0.0090	0.0001	0.0000	0.0000	0.0000	0.0000	0.0000
CH_4	0.0000	0.0000	0.0000	0.0031	0.0011	0.0026	0.0026	0.0000	0.0026
CO	0.0000	0.0000	0.0000	0.0003	0.0000	0.0002	0.0002	0.0000	0.0002
CO_2	0.0084	0.0000	0.0084	0.9826	0.9974	0.9866	0.9893	0.0500	0.9893
COS	0.0000	0.0000	0.0000	0.0000	0.0000	0.0000	0.0000	0.0000	0.0000
H_2	0.0000	0.0000	0.0000	0.0097	0.0007	0.0072	0.0073	0.0000	0.0073
H_2O	0.1196	1.0000	0.1206	0.0041	0.0007	0.0032	0.0005	0.9500	0.0005
HCl	0.0000	0.0000	0.0000	0.0000	0.0000	0.0000	0.0000	0.0000	0.0000
H_2S	0.0000	0.0000	0.0000	0.0000	0.0000	0.0000	0.0000	0.0000	0.0000
N_2	0.7568	0.0000	0.7558	0.0001	0.0000	0.0001	0.0001	0.0000	0.0001
NH_3	0.0000	0.0000	0.0000	0.0000	0.0000	0.0000	0.0000	0.0000	0.0000
O_2	0.1064	0.0000	0.1061	0.0000	0.0000	0.0000	0.0000	0.0000	0.0000
SO_2	0.0000	0.0000	0.0000	0.0000	0.0000	0.0000	0.0000	0.0000	0.0000
NaCl	0.0000	0.0000	0.0000	0.0000	0.0000	0.0000	0.0000	0.0000	0.0000
NaOH	0.0000	0.0000	0.0000	0.0000	0.0000	0.0000	0.0000	0.0000	0.0000
Total	1.0000	1.0000	1.0000	1.0000	1.0000	1.0000	1.0000	1.0000	1.0000
V-L Flowrate (kg_{mol}/hr)	138,161	38,970	138,625	7,660	2,841	10,501	10,471	30	10,471
V-L Flowrate (kg/hr)	3,796,668	702,056	3,808,407	332,441	124,821	457,262	456,690	572	456,690
Solids Flowrate (kg/hr)	0	0	0	0	0	0	0	0	0
Temperature (°C)	566	535	130	-3	-11	29	29	29	30
Pressure (MPa, abs)	0.10	12.51	0.10	0.55	0.12	2.50	2.39	2.50	15.27
Steam Table Enthalpy (kJ/kg)[A]	834.10	3,436.78	338.25	-8.35	-9.65	2.13	0.56	138.13	-226.92
AspenPlus Enthalpy (kJ/kg)[B]	-562.02	-12,543.52	-1,069.57	-8,971.51	-8,971.34	-8,960.80	-8,954.35	-15,225.03	-9,181.83
Density (kg/m^3)	0.4	36.6	0.8	11.2	2.3	49.7	47.2	319.0	836.6
V-L Molecular Weight	27.480	18.015	27.473	43.402	43.930	43.545	43.614	19.315	43.614
V-L Flowrate (lb_{mol}/hr)	304,593	85,914	305,616	16,886	6,264	23,150	23,085	65	23,085
V-L Flowrate (lb/hr)	8,370,221	1,547,767	8,396,099	732,907	275,184	1,008,091	1,006,830	1,261	1,006,830
Solids Flowrate (lb/hr)	0	0	0	0	0	0	0	0	0
Temperature (°F)	1,051	996	265	26	12	85	85	85	86
Pressure (psia)	15.1	1,814.7	14.8	80.0	16.7	363.0	346.5	363.0	2,214.7
Steam Table Enthalpy (Btu/lb)[A]	358.6	1,477.5	145.4	-3.6	-4.1	0.9	0.2	59.4	-97.6
AspenPlus Enthalpy (Btu/lb)[B]	-241.6	-5,392.7	-459.8	-3,857.1	-3,857.0	-3,852.4	-3,849.7	-6,545.6	-3,947.5
Density (lb/ft^3)	0.026	2.287	0.052	0.697	0.146	3.105	2.945	19.917	52.229

[A]Steam table reference conditions are 32.02°F & 0.089 psia

[B]Aspen thermodynamic reference state is the component's constituent elements in an ideal gas state at 25°C and 1 atm

3.3.8.3 Raw Gas Cooling and Particulate Removal

No differences from Case B4A.

3.3.8.4 Syngas Scrubber

Case B4B differs from Case B4A only in the degree of cooling completed prior to the cooling water HX. In Case B4A, both the process water and scrubber effluent recycle are cooled to 58°C (137°F) by preheating syngas prior to the CT. However, in this case, the recycled effluent is cooled from 181°C (357°F) to 44°C (112°F) by preheating FW to the WGS steam generator, and the process water (stream 20) is cooled to 32°C (90°F) by preheating syngas prior to the CT and mixed with the cooled effluent before being cooled further to 21°C (70°F) with cooling water and injected into the scrubber.

3.3.8.5 Water Gas Shift

The WGS process was described in Section 3.1.3. After the scrubber, the syngas is combined with steam (stream 17) to adjust the steam to dry gas ratio prior to the first WGS reactor. The rate of steam injection is controlled to maintain an exit steam to dry gas ratio of approximately 0.25. Three stages total are used to convert 97.3 percent of the CO in the syngas to CO_2. The heat generated from the first two reactors is used to produce most (an additional 12,565 kg/hr [27,700 lb/hr] is extracted from the steam cycle) of the steam required to maintain the desired steam to dry gas ratio while cooling the syngas to 253°C (487°F) prior to entering the second and third stages. Prior to the syngas being sent to the LTHR system (stream 21), the warm syngas from the third stage of WGS is cooled to 228°C (442°F) by preheating the FW of the WGS steam generator.

The WGS catalyst also serves to hydrolyze COS thus eliminating the need for a separate COS hydrolysis reactor.

3.3.8.6 Quench Gas Compressor

The recycle to the gasifier in Case B4B is taken after the WGS, rather than before the syngas scrubber, as was done in Case B4A. Approximately six percent of the syngas exiting the WGS is recycled to the gasifier exit. All other aspects of the syngas recycle are identical to those of Case B4A.

3.3.8.7 Low Temperature Heat Recovery

Case B4B only differs from Case B4A in that the second stage of the LTHR system cools the syngas by heating water fed to the gasifier and preheating the FW of the WGS steam generator, in addition to the other uses described for Case B4A.

3.3.8.8 Sour Water Stripper and Ammonia Wash

No differences from Case B4A.

3.3.8.9 Process Water Treatment

The process water treatment system is identical to that used in Case B4A, with the exception that the vapor products from both the LP and vacuum flash stages are cooled to 46°C (115°F) prior to the cooling water condensing HX. The lower temperature reached in this case (46°C [115°F] versus 72°C [162°F]) is due to the lower exit temperature of the Selexol system, compared to the MDEA system.

3.3.8.10 Mercury Removal and AGR

Mercury removal is the same as in Case B4A.

The AGR process in Case B4B is a two-stage Selexol process (covered in Section 3.1.5.4) where H_2S is removed in the first stage and CO_2 in the second stage of absorption. The process results in four product streams, the clean syngas (stream 29), two CO_2-rich streams (streams 40 and 41) and an acid gas feed to the Claus plant (stream 30). The acid gas contains 45 vol% H_2S and 51 vol% CO_2 with the balance primarily water and H_2. The raw CO_2 stream from the Selexol process contains over 99 vol% CO_2.

3.3.8.11 Claus Unit

No differences from Case B4A.

3.3.8.12 Power Block

In Case B4B, HP N_2 (stream 6) at 3.2 MPa (470 psia), in addition to the LP N_2 (stream 7) at 2.7 MPa (390 psia), is used as a syngas diluent. The exhaust gas (stream 37) exits the CT at a lower temperature (566°C [1,051°F]) than Case B4A due to the higher moisture content.

3.3.8.13 Air Separation Unit

No differences from Case B4A.

3.3.9 Case B4B – Performance Results

The Case B4B modeling assumptions were presented previously in Section 3.3.2.

The plant produces a net output of 557 MW at a net plant efficiency of 33.8 percent (HHV basis). Overall performance for the entire plant is summarized in Exhibit 3-74. Exhibit 3-75 provides a detailed breakdown of the auxiliary power requirements. The ASU accounts for nearly 62 percent of the auxiliary load between the MAC, N_2 compressor, O_2 compressor, and ASU auxiliaries. The two-stage Selexol process and CO_2 compression account for an additional 24 percent of the auxiliary power load. The BFW pumps and cooling water system (circulating water pumps and cooling tower fan) compose nearly 6 percent of the load, with all other systems together constituting the remaining 8 percent of the auxiliary load.

Exhibit 3-74. Case B4B plant performance summary

Performance Summary	
Combustion Turbine Power, MWe	464
Sweet Gas Expander Power, MWe	0
Steam Turbine Power, MWe	278
Total Gross Power, MWe	**742**
Air Separation Unit Main Air Compressor, kWe	69,670
Air Separation Unit Booster Compressor, kWe	5,480
N_2 Compressors, kWe	36,930
CO_2 Compression, kWe	31,930
Acid Gas Removal, kWe	11,650
Balance of Plant, kWe	29,160
Total Auxiliaries, MWe	**185**
Net Power, MWe	**557**
HHV Net Plant Efficiency, %	33.8%
HHV Net Plant Heat Rate, kJ/kWh (Btu/kWh)	10,657 (10,101)
HHV Cold Gas Efficiency, %	80.4%
HHV Combustion Turbine Efficiency, %	36.3%
LHV Net Plant Efficiency, %	35.0%
LHV Net Plant Heat Rate, kJ/kWh (Btu/kWh)	10,279 (9,743)
LHV Cold Gas Efficiency, %	76.4%
LHV Combustion Turbine Efficiency, %	42.6%
Steam Turbine Cycle Efficiency, %	44.7%
Steam Turbine Heat Rate, kJ/kWh (Btu/kWh)	8,052 (7,632)
Condenser Duty, GJ/hr (MMBtu/hr)	1,492 (1,414)
AGR Cooling Duty, GJ/hr (MMBtu/hr)	148 (141)
As-Received Coal Feed, kg/hr (lb/hr)	218,710 (482,173)
HHV Thermal Input, kWt	1,648,535
LHV Thermal Input, kWt	1,590,032
Raw Water Withdrawal, $(m^3/min)/MW_{net}$ (gpm/MW_{net})	0.035 (9.3)
Raw Water Consumption, $(m^3/min)/MW_{net}$ (gpm/MW_{net})	0.028 (7.4)
O_2:As-Received Coal	0.738

Exhibit 3-75. Case B4B plant power summary

Power Summary	
Combustion Turbine Power, MWe	464
Sweet Gas Expander Power, MWe	0
Steam Turbine Power, MWe	278
Total Gross Power, MWe	**742**
Auxiliary Load Summary	
Acid Gas Removal, kWe	11,650
Air Separation Unit Auxiliaries, kWe	1,000
Air Separation Unit Main Air Compressor, kWe	69,670
Air Separation Unit Booster Compressor, kWe	5,480
Ammonia Wash Pumps, kWe	120
Circulating Water Pumps, kWe	4,770
Claus Plant TG Recycle Compressor, kWe	1,300
Claus Plant/TGTU Auxiliaries, kWe	250
CO_2 Compression, kWe	31,930
Coal Dryer Air Compressor, kWe	0
Coal Handling, kWe	470
Coal Milling, kWe	2,250
Combustion Turbine Auxiliaries, kWe	1,000
Condensate Pumps, kWe	270
Cooling Tower Fans, kWe	2,470
Feedwater Pumps, kWe	4,240
Gasifier Water Pump, kWe	160
Ground Water Pumps, kWe	470
Miscellaneous Balance of Plant[A], kWe	3,000
N_2 Compressors, kWe	36,930
N_2 Humidification Pump, kWe	0
O_2 Pump, kWe	350
Quench Water Pump, kWe	0
Shift Steam Pump, kWe	150
Slag Handling, kWe	1,160
Slag Reclaim Water Recycle Pump, kWe	0
Slurry Water Pump, kWe	190

Power Summary	
Auxiliary Load Summary	
Sour Gas Compressors, kWe	170
Sour Water Recycle Pumps, kWe	0
Steam Turbine Auxiliaries, kWe	200
Syngas Recycle Compressor, kWe	810
Syngas Scrubber Pumps, kWe	120
Process Water Treatment Auxiliaries, kWe	1,370
Transformer Losses, kWe	2,870
Total Auxiliaries, MWe	**185**
Net Power, MWe	**557**

[A]Includes plant control systems, lighting, HVAC, and miscellaneous low voltage loads

3.3.9.1 Environmental Performance

The environmental targets for emissions of Hg, HCl, NOx, SO_2, CO_2, and PM were presented in Section 2.4. A summary of the plant air emissions for Case B4B is presented in Exhibit 3-76.

Exhibit 3-76. Case B4B air emissions

	kg/GJ (lb/MMBtu)	Tonne/year (ton/year)[A]	kg/MWh (lb/MWh)[B]
SO_2	0.000 (0.000)	0 (0)	0.000 (0.000)
NOx	0.021 (0.049)	874 (963)	0.168 (0.371)
Particulate	0.003 (0.007)	127 (140)	0.024 (0.054)
Hg	1.70E-7 (3.96E-7)	0.007 (0.008)	1.36E-6 (3.00E-6)
HCl	0.000 (0.000)	0.00 (0.00)	0.000 (0.000)
CO_2	9 (20)	360,945 (397,873)	69 (153)
CO_2[C]	-	-	92 (204)

[A]Calculations based on an 80 percent capacity factor
[B]Emissions based on gross power except where otherwise noted
[C]CO_2 emissions based on net power instead of gross power

The low level of SO_2 emissions is achieved by capturing the sulfur in the gas by the two-stage Selexol AGR process. The CO_2 capture target results in the sulfur compounds being removed to a greater extent than required in the environmental targets of Section 2.4. The clean syngas exiting the AGR process has a sulfur concentration of approximately 5 ppmv. This results in a concentration in the flue gas of less than 1 ppmv. The H_2S-rich regeneration gas from the AGR system is fed to a Claus plant, producing elemental sulfur. The Claus plant tail gas is hydrogenated to convert all sulfur species to H_2S, and then recycled back to the Selexol, thereby eliminating the need for a TGTU.

NOx emissions are limited by the use of N_2 dilution to 15 ppmvd (NO at 15 percent O_2). NH_3 in the syngas is removed with process condensate prior to the low-temperature AGR process and ultimately destroyed in the Claus plant burner. This helps lower NOx levels as well.

Particulate discharge to the atmosphere is limited to extremely low values by the use of a cyclone and a barrier filter in addition to the syngas scrubber and the gas washing effect of the AGR absorber. The particulate emissions represent filterable particulate only.

Approximately 97 percent of the mercury is captured from the syngas by dual activated carbon beds.

Ninety five percent of the CO_2 from the syngas is captured in the AGR system and compressed for sequestration. Because not all CO is converted to CO_2 in the shift reactors, the overall carbon removal is 90 percent.

The carbon balance for the plant is shown in Exhibit 3-77. The carbon input to the plant consists of carbon in the air in addition to carbon in the coal. Carbon leaves the plant as unburned carbon in the slag and, the captured CO_2 product, and as CO_2 in the stack gas (includes the ASU vent gas). The carbon capture efficiency is defined as one minus the amount of carbon in the stack gas relative to the total carbon in less carbon contained in the slag, represented by the following fraction:

$$\left(1-\left(\frac{Carbon\ in\ Stack}{(Total\ Carbon\ In)-(Carbon\ in\ Slag)}\right)\right)*100=\left(1-\left(\frac{30{,}989}{308{,}532-2{,}459}\right)*\right)100=90\%$$

The high methane content of the syngas, relative to the GEP and Shell cases, prevented reaching the nominal 90 percent carbon capture. In order to achieve an overall 90 percent capture, a third stage of WGS was added.

Exhibit 3-77. Case B4B carbon balance

Carbon In		Carbon Out	
	kg/hr (lb/hr)		kg/hr (lb/hr)
Coal	139,416 (307,360)	Stack Gas	14,056 (30,989)
Air (CO_2)	531 (1,171)	CO_2 Product	124,776 (275,084)
		Slag	1,115 (2,459)
Total	**139,948 (308,532)**	**Total**	**139,948 (308,532)**

Exhibit 3-78 shows the sulfur balance for the plant. Sulfur input comes solely from the sulfur in the coal. Sulfur output includes the sulfur recovered in the Claus plant and sulfur in the CO_2 product. Sulfur in the slag is considered to be negligible.

Exhibit 3-78. Case B4B sulfur balance

Sulfur In		Sulfur Out	
	kg/hr (lb/hr)		kg/hr (lb/hr)
Coal	5,482 (12,085)	Stack Gas	–
		CO_2 Product	1 (2)
		Elemental Sulfur	5,481 (12,084)
Total	**5,482 (12,085)**	**Total**	**5,482 (12,085)**

Exhibit 3-79 shows the overall water balance for the plant. The exhibit is presented in an identical manner as cases B1A through B4A.

Exhibit 3-79. Case B4B water balance

Water Use	Water Demand	Internal Recycle	Raw Water Withdrawal	Process Water Discharge	Raw Water Consumption
	m^3/min (gpm)	m^3/min (gpm)	m^3/min (gpm)	m^3/min (gpm)	m^3/min (gpm)
Slag Handling	0.48 (128)	0.48 (128)	–	–	–
Slurry Water	1.50 (396)	1.50 (396)	–	–	–
Gasifier Water	0.39 (102)	0.39 (102)	–	–	–
Quench	–	–	–	–	–
HCl Scrubber	1.30 (342)	1.30 (342)	–	–	–
NH_3 Scrubber	1.66 (438)	1.15 (303)	0.51 (136)	–	0.51 (136)
Gasifier Steam	0.87 (231)	0.87 (231)	–	–	–
Condenser Makeup	**0.82 (216)**	**–**	**0.82 (216)**	**–**	**0.82 (216)**
BFW Makeup	0.21 (55)	–	0.21 (55)	–	0.21 (55)
Gasifier Steam	0.61 (161)	–	0.61 (161)	–	0.61 (161)
Shift Steam	–	–	–	–	–
N_2 Humidification	–	–	–	–	–
Cooling Tower	**18.57 (4,906)**	**0.23 (61)**	**18.34 (4,845)**	**4.18 (1,103)**	**14.16 (3,741)**
BFW Blowdown	–	0.21 (55)	-0.21 (-55)	–	-0.21 (-55)
ASU Knockout	–	0.02 (6)	-0.02 (-6)	–	-0.02 (-6)
Total	**25.59 (6,760)**	**5.92 (1,563)**	**19.67 (5,197)**	**4.18 (1,103)**	**15.50 (4,093)**

An overall plant energy balance is provided in tabular form in Exhibit 3-80. The power out is the combined CT and steam turbine power prior to generator losses. The power at the generator terminals (shown in Exhibit 3-74) is calculated by multiplying the power out by a combined generator efficiency of 98.5 percent.

Exhibit 3-80. Case B4B overall energy balance (0°C [32°F] reference)

	HHV	Sensible + Latent	Power	Total
Heat In, MMBtu/hr (GJ/hr)				
Coal	5,935 (5,625)	5.0 (4.7)	–	5,940 (5,630)
Air	–	118.1 (111.9)	–	118.1 (111.9)
Raw Water Makeup	–	74.0 (70.1)	–	74.0 (70.1)
Auxiliary Power	–	–	665.4 (630.6)	665.4 (630.6)
TOTAL	**5,935 (5,625)**	**197.0 (186.7)**	**665.4 (630.6)**	**6,797 (6,442)**
Heat Out, MMBtu/hr (GJ/hr)				
Misc. Process Steam	–	4.8 (4.6)	–	4.8 (4.6)
Slag	36.6 (34.7)	25.1 (23.8)	–	61.6 (58.4)
Stack Gas	–	1,288 (1,221)	–	1,288 (1,221)
Sulfur	50.8 (48.1)	0.7 (0.6)	–	51.4 (48.8)
Motor Losses and Design Allowances	–	–	58.2 (55.2)	58.2 (55.2)
Cooling Tower Load[A]	–	2,425 (2,298)	–	2,425 (2,298)
CO_2 Product Stream	–	-103.6 (-98.2)	–	-103.6 (-98.2)
Blowdown Streams	–	38.5 (36.5)	–	38.5 (36.5)
Ambient Losses[B]	–	144.0 (136.5)	–	144.0 (136.5)
Power	–	–	2,670 (2,531)	2,670 (2,531)
TOTAL	**87.4 (82.8)**	**3,822 (3,623)**	**2,728 (2,586)**	**6,638 (6,292)**
Unaccounted Energy[C]	–	–	–	159.2 (150.9)

[A]Includes condenser, AGR, and miscellaneous cooling loads
[B]Ambient losses include all losses to the environment through radiation, convection, etc. Sources of these losses include the combustor, reheater, superheater, and transformers
[C]By difference

3.3.9.2 Energy and Mass Balance Diagrams

Energy and mass balance diagrams are shown for the following subsystems in Exhibit 3-81 through Exhibit 3-83:

- Coal gasification and ASU
- Syngas cleanup including sulfur recovery and tail gas recycle
- Combined cycle power generation, steam, and FW

This page intentionally left blank

Exhibit 3-81. Case B4B coal gasification and ASU energy and mass balance

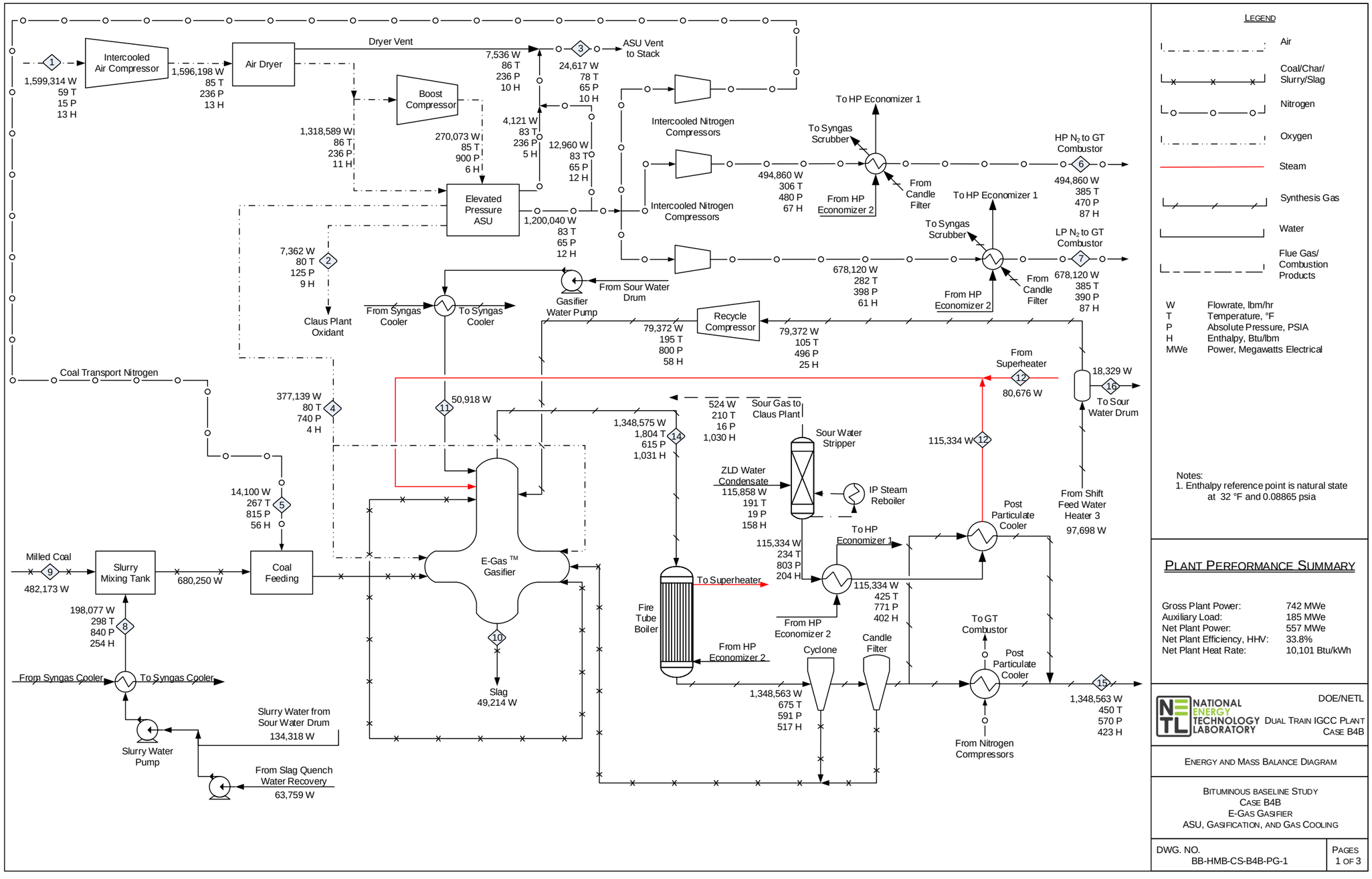

Exhibit 3-82. Case B4B syngas cleanup energy and mass balance

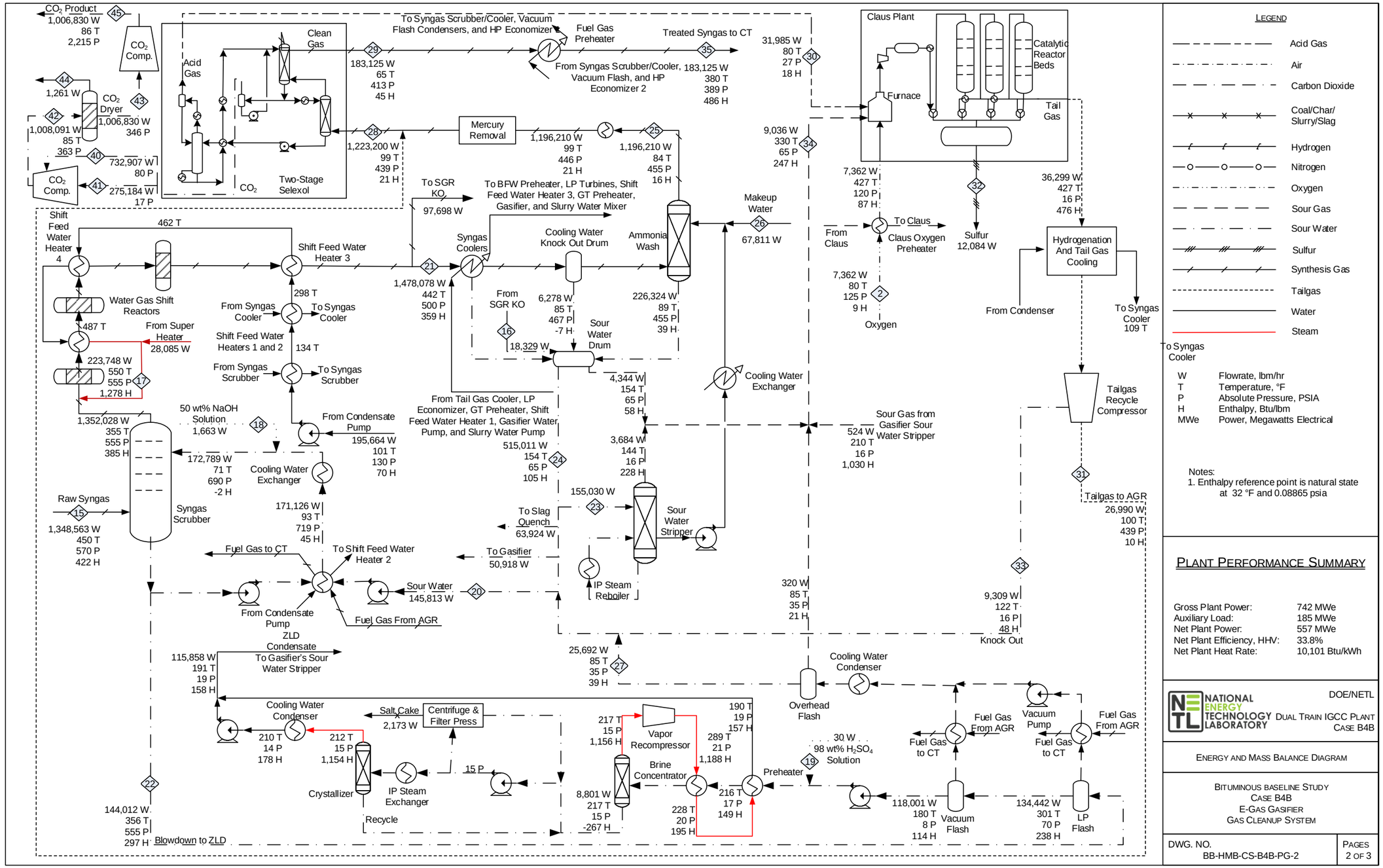

Exhibit 3-83. Case B4B combined cycle power generation energy and mass balance

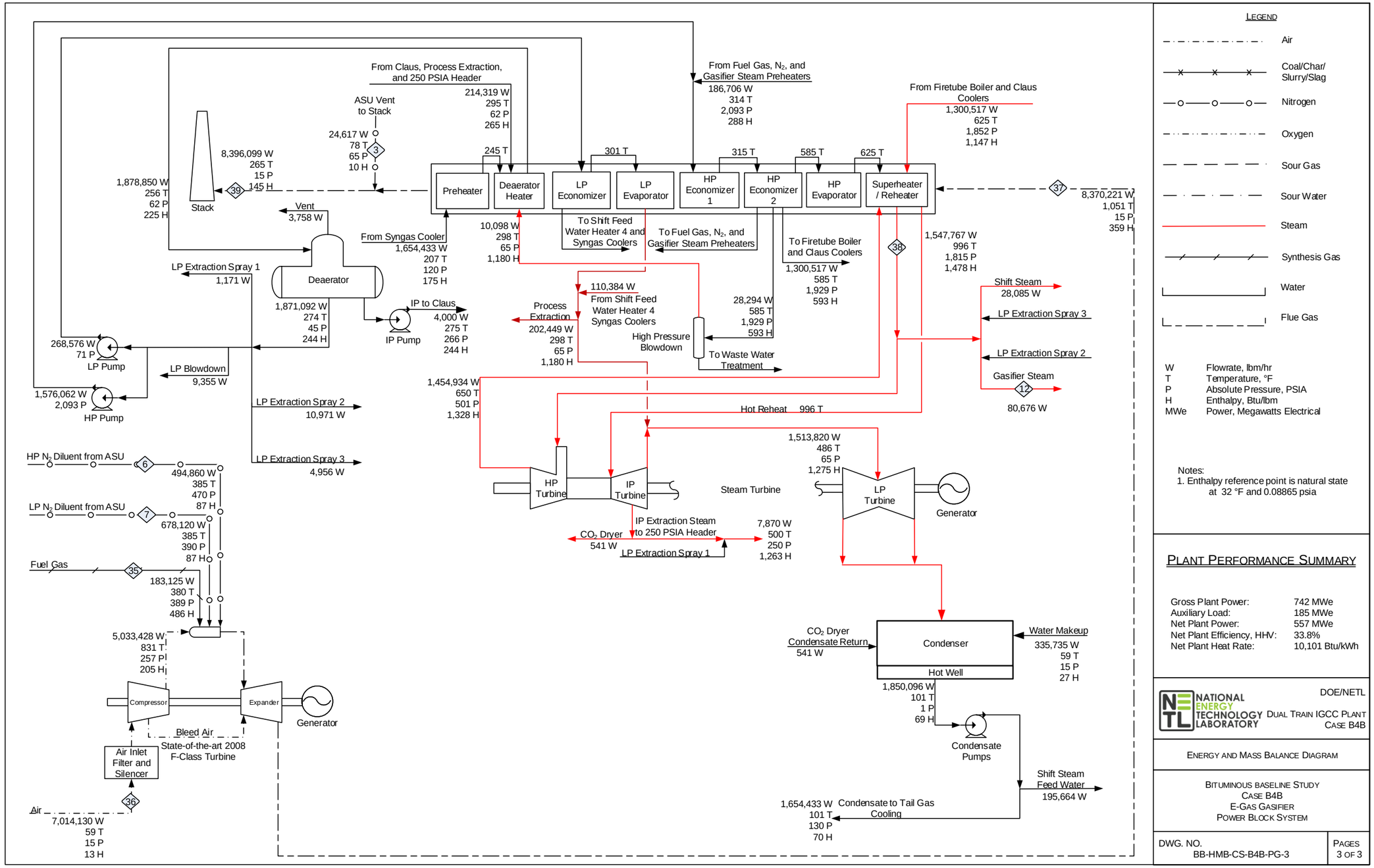

3.3.10 Case B4B – Major Equipment List

Major equipment items for the E-Gas™ gasifier with CO_2 capture are shown in the following tables. In general, the design conditions include a 10 percent design allowance for flows and heat duties and a 21 percent design allowance for heads on pumps and fans.

Case B4B – Account 1: Coal Handling

Equipment No.	Description	Type	Design Condition	Operating Qty.	Spares
1	Bottom Trestle Dumper and Receiving Hoppers	N/A	181 tonne (200 ton)	2	0
2	Feeder	Belt	570 tonne/hr (630 tph)	2	0
3	Conveyor No. 1	Belt	1,130 tonne/hr (1,250 tph)	1	0
4	Conveyor No. 2	Belt	1,130 tonne/hr (1,250 tph)	1	0
5	Stacker/Reclaimer	Traveling, linear	1,130 tonne/hr (1,250 tph)	1	0
6	Reclaim Hopper	N/A	50 tonne (50 ton)	2	1
7	Feeder	Vibratory	180 tonne/hr (200 tph)	2	1
8	Conveyor No. 3	Belt w/ tripper	360 tonne/hr (400 tph)	1	0
9	Coal Surge Bin w/ Vent Filter	Dual outlet	180 tonne (200 ton)	2	0
10	Crusher	Impactor reduction	8 cm x 0 - 3 cm x 0 (3" x 0 - 1-1/4" x 0)	2	0
11	Conveyor No. 4	Belt w/tripper	360 tonne/hr (400 tph)	1	0
12	Conveyor No. 5	Belt w/ tripper	360 tonne/hr (400 tph)	1	0
13	Coal Silo w/ Vent Filter and Slide Gates	Field erected	800 tonne (880 ton)	3	0

Case B4B – Account 2: Coal Preparation and Feed

Equipment No.	Description	Type	Design Condition	Operating Qty.	Spares
1	Feeder	Vibratory	80 tonne/hr (90 tph)	3	0
2	Conveyor No. 6	Belt w/tripper	240 tonne/hr (270 tph)	1	0
3	Rod Mill Feed Hopper	Dual Outlet	480 tonne (530 ton)	1	0
4	Weigh Feeder	Belt	120 tonne/hr (130 tph)	2	0
5	Rod Mill	Rotary	120 tonne/hr (130 tph)	2	0
6	Slurry Water Storage Tank with Agitator	Field erected	296,930 liters (78,440 gal)	2	0
7	Slurry Water Pumps	Centrifugal	820 lpm (220 gpm)	2	1
8	Trommel Screen	Coarse	170 tonne/hr (190 tph)	2	0
9	Rod Mill Discharge Tank with Agitator	Field erected	388,420 liters (102,610 gal)	2	0
10	Rod Mill Product Pumps	Centrifugal	3,200 lpm (900 gpm)	2	2
11	Slurry Storage Tank with Agitator	Field erected	1,165,300 liters (307,800 gal)	2	0
12	Slurry Recycle Pumps	Centrifugal	6,500 lpm (1,700 gpm)	2	2
13	Slurry Product Pumps	Positive displacement	3,200 lpm (900 gpm)	2	2

Case B4B – Account 3: Feedwater and Miscellaneous Balance of Plant Systems

Equipment No.	Description	Type	Design Condition	Operating Qty.	Spares
1	Demineralized Water Storage Tank	Vertical, cylindrical, outdoor	10,057,000 liters (2,657,000 gal)	2	0
2	Condensate Pumps	Vertical canned	7,750 lpm @ 90 m H_2O (2,050 gpm @ 300 ft H_2O)	2	1
3	Deaerator (integral w/ HRSG)	Horizontal spray type	469,000 kg/hr (1,033,000 lb/hr)	2	0
4	Intermediate Pressure Feedwater Pump	Horizontal centrifugal, single stage	1,160 lpm @ 20 m H_2O (310 gpm @ 70 ft H_2O)	2	1
5	High Pressure Feedwater Pump No. 1	Barrel type, multi-stage, centrifugal	HP water: 6,820 lpm @ 1,700 m H_2O (1,800 gpm @ 5,700 ft H_2O)	2	1
6	High Pressure Feedwater Pump No. 2	Barrel type, multi-stage, centrifugal	IP water: 810 lpm @ 210 m H_2O (210 gpm @ 670 ft H_2O)	2	1
7	Auxiliary Boiler	Shop fabricated, water tube	18,000 kg/hr, 2.8 MPa, 343°C (40,000 lb/hr, 400 psig, 650°F)	1	0
8	Service Air Compressors	Flooded Screw	28 m^3/min @ 0.7 MPa (1,000 scfm @ 100 psig)	2	1
9	Instrument Air Dryers	Duplex, regenerative	28 m^3/min (1,000 scfm)	2	1
10	Closed Cycle Cooling Heat Exchangers	Plate and frame	431 GJ/hr (409 MMBtu/hr) each	2	0
11	Closed Cycle Cooling Water Pumps	Horizontal centrifugal	154,700 lpm @ 20 m H_2O (40,900 gpm @ 70 ft H_2O)	2	1
12	Engine-Driven Fire Pump	Vertical turbine, diesel engine	3,785 lpm @ 110 m H_2O (1,000 gpm @ 350 ft H_2O)	1	1
13	Fire Service Booster Pump	Two-stage horizontal centrifugal	2,650 lpm @ 80 m H_2O (700 gpm @ 250 ft H_2O)	1	1
14	Municipal Water Pumps	Stainless steel, single suction	3,680 lpm @ 20 m H_2O (970 gpm @ 60 ft H_2O)	2	1
15	Ground Water Pumps	Stainless steel, single suction	2,450 lpm @ 270 m H_2O (650 gpm @ 880 ft H_2O)	3	1
16	Filtered Water Pumps	Stainless steel, single suction	1,680 lpm @ 50 m H_2O (440 gpm @ 160 ft H_2O)	2	1
17	Filtered Water Tank	Vertical, cylindrical	806,000 liter (213,000 gal)	2	0
18	Makeup Water Demineralizer	Anion, cation, and mixed bed	1,400 lpm (370 gpm)	2	0
19	Liquid Waste Treatment System	N/A	10 years, 24-hour storm	1	0
20	Process Water Treatment	Vacuum flash, brine concentrator, and crystallizer	Vacuum Flash - Inlet: 36,000 kg/hr (79,000 lb/hr) Outlet: 6,102 ppmw Cl- Brine Concentrator Inlet - 29,000 kg/hr (65,000 lb/hr) Crystallizer Inlet - 2,000 kg/hr (5,000 lb/hr)	2	0

Case B4B – Account 4: Gasifier, ASU, and Accessories

Equipment No.	Description	Type	Design Condition	Operating Qty.	Spares
1	Gasifier	Pressurized two-stage, slurry-feed entrained bed	2,900 tonne/day, 4.2 MPa (3,200 tpd, 615 psia)	2	0
2	Synthesis Gas Cooler	Fire-tube boiler	336,000 kg/hr (742,000 lb/hr)	2	0
3	Synthesis Gas Cyclone	High efficiency	336,000 kg/hr (742,000 lb/hr) Design efficiency 90%	2	0
4	HCl Scrubber	Ejector Venturi	336,000 kg/hr (742,000 lb/hr)	2	0
5	Ammonia Wash	Counter-flow spray tower	300,000 kg/hr (662,000 lb/hr) @ 3.2 MPa (467 psia)	2	0
6	Primary Sour Water Stripper	Counter-flow with external reboiler	39,000 kg/hr (85,000 lb/hr)	2	0
7	Secondary Sour Water Stripper	Counter-flow with external reboiler	29,000 kg/hr (64,000 lb/hr)	2	0
8	Low Temperature Heat Recovery Coolers	Shell and tube with condensate drain	369,000 kg/hr (813,000 lb/hr)	6	0
9	Low Temperature Heat Recovery Knockout Drum	Vertical with mist eliminator	302,000 kg/hr, 59°C, 3.2 MPa (665,000 lb/hr, 138°F, 470 psia)	2	0
10	Saturation Water Economizers	Shell and tube	N/A	4	0
11	HP Nitrogen Gas Saturator	Direct Injection	123,000 kg/hr, 196°C, 3.2 MPa (272,000 lb/hr, 385°F, 470 psia)	2	0
12	LP Nitrogen Gas Saturator	Direct Injection	169,000 kg/hr, 196°C, 2.7 MPa (373,000 lb/hr, 385°F, 390 psia)	2	0
13	Saturator Water Pump	Centrifugal	N/A	2	2
14	Saturated Nitrogen Reheaters	Shell and tube	N/A	4	0
15	Synthesis Gas Reheaters	Shell and tube	Reheater 1: N/A Reheater 2: 10,000 kg/hr (22,000 lb/hr) Reheater 3: 26,000 kg/hr (57,000 lb/hr) Reheater 4: 10,000 kg/hr (22,000 lb/hr) Reheater 5: 46,000 kg/hr (101,000 lb/hr) Reheater 6: 46,000 kg/hr (101,000 lb/hr)	2	0
16	Flare Stack	Self-supporting, carbon steel, stainless steel top, pilot ignition	337,000 kg/hr (744,000 lb/hr) syngas	2	0
17	ASU Main Air Compressor	Centrifugal, multi-stage	5,000 m^3/min @ 1.6 MPa (193,000 scfm @ 236 psia)	2	0
18	Cold Box	Vendor design	2,300 tonne/day (2,500 tpd) of 95% purity O_2	2	0
19	Gasifier O_2 Pump	Centrifugal, multi-stage	1,000 m^3/min (41,000 scfm) Suction - 1.0 MPa (130 psia) Discharge - 5.1 MPa (740 psia)	2	0

Equipment No.	Description	Type	Design Condition	Operating Qty.	Spares
20	AGR Nitrogen Boost Compressor	Centrifugal, multi-stage	N/A	2	0
21	High Pressure Nitrogen Diluent Compressor	Centrifugal, multi-stage	2,000 m^3/min (61,000 scfm) Suction - 0.4 MPa (70 psia) Discharge - 3.3 MPa (480 psia)	2	0
22	Low Pressure Nitrogen Diluent Compressor	Centrifugal, single-stage	2,380 m^3/min (84,000 scfm) Suction - 0.4 MPa (70 psia) Discharge - 2.7 MPa (400 psia)	2	0
23	Gasifier Nitrogen Boost Compressor	Centrifugal, single-stage	50 m^3/min (2,000 scfm) Suction - 0.4 MPa (70 psia) Discharge - 5.6 MPa (820 psia)	2	0

Case B4B – Account 5: Syngas Cleanup

Equipment No.	Description	Type	Design Condition	Operating Qty.	Spares
1	Mercury Adsorber 1	Sulfated carbon bed	298,000 kg/hr (658,000 lb/hr) 29°C (84°F) 3.1 MPa (455 psia)	2	0
2	Mercury Adsorber 2	Sulfated carbon bed	298,000 kg/hr (658,000 lb/hr) 37°C (99°F) 3.1 MPa (442 psia)	2	0
3	Sulfur Plant	Claus type	145 tonne/day (160 tpd)	1	0
4	Water Gas Shift Reactors	Fixed bed, catalytic	131,000 kg/hr (289,000 lb/hr) 199°C (390°F) 3.9 MPa (560 psia)	6	0
5	Shift Reactor Heat Recovery Exchangers	Shell and Tube	Exchanger 1: 88 GJ/hr (84 MMBtu/hr) Exchanger 2: 93 GJ/hr (88 MMBtu/hr) Exchanger 3: 29 GJ/hr (28 MMBtu/hr) Exchanger 4: 40 GJ/hr (38 MMBtu/hr)	8	0
6	Acid Gas Removal Plant	Two-stage Selexol	610,000 kg/hr (1,346,000 lb/hr) 37°C (99°F) 3.0 MPa (439 psia)	1	0
7	Hydrogenation Reactor	Fixed bed, catalytic	18,000 kg/hr (40,000 lb/hr) 219°C (427°F) 0.1 MPa (16.4388411 psia)	1	0
8	Tail Gas Recycle Compressor	Centrifugal	13,000 kg/hr (30,000 lb/hr) each	1	0
9	Candle Filter	Pressurized filter with pulse-jet cleaning	metallic filters	2	0
10	CO_2 Dryer	Triethylene glycol	Inlet: 153 m^3/min @ 2.5 MPa (5,411 acfm @ 363 psia) Outlet: 2.4 MPa (346 psia) Water Recovered: 572 kg/hr (1,261 lb/hr)	1	0
11	CO_2 Compressor	Integrally geared, multi-stage centrifugal	10 m3/min @ 15.3 MPa (353 acfm @ 2,217 psia)	1	0
12	CO_2 Aftercooler	Shell and tube heat exchanger	Outlet: 15.3 MPa, 30°C (2,215 psia, 86°F) Duty: 78 MMkJ/hr (74 MMBtu/hr)	1	0

Case B4B – Account 6: Combustion Turbine and Accessories

Equipment No.	Description	Type	Design Condition	Operating Qty.	Spares
1	Combustion Turbine	State-of-the-art 2008 F-Class	232 MW	2	0
2	Combustion Turbine Generator	TEWAC	260 MVA @ 0.9 p.f., 24 kV, 60 Hz, 3-phase	2	0

Case B4B – Account 7: HRSG, Ductwork, and Stack

Equipment No.	Description	Type	Design Condition	Operating Qty.	Spares
1	Stack	CS plate, type 409SS liner	76 m (250 ft) high x 8.5 m (28 ft) diameter	1	0
2	Heat Recovery Steam Generator	Drum, multi-pressure with economizer section and integral deaerator	Main steam - 386,131 kg/hr, 12.4 MPa/535°C (851,272 lb/hr, 1,800 psig/996°F) Reheat steam - 362,971 kg/hr, 3.3 MPa/535°C (800,214 lb/hr, 477 psig/996°F)	2	0

Case B4B – Account 8: Steam Turbine and Accessories

Equipment No.	Description	Type	Design Condition	Operating Qty.	Spares
1	Steam Turbine	Commercially available advanced steam turbine	292 MW 12.4 MPa/535°C/535°C (1,800 psig/ 996°F/996°F)	1	0
2	Steam Turbine Generator	Hydrogen cooled, static excitation	320 MVA @ 0.9 p.f., 24 kV, 60 Hz, 3-phase	1	0
3	Surface Condenser	Single pass, divided waterbox including vacuum pumps	1,640GJ/hr (1,560 MMBtu/hr), Inlet water temperature 16°C (60°F), Water temperature rise 11°C (20°F)	1	0
4	Steam Bypass	One per HRSG	50% steam flow @ design steam conditions	2	0

Case B4B – Account 9: Cooling Water System

Equipment No.	Description	Type	Design Condition	Operating Qty.	Spares
1	Circulating Water Pumps	Vertical, wet pit	479,000 lpm @ 30 m (126,000 gpm @ 100 ft)	2	1
2	Cooling Tower	Evaporative, mechanical draft, multi-cell	11°C (51.5°F) wet bulb/ 16°C (60°F) CWT/ 27°C (80°F) HWT/ 2,670 GJ/hr (2,530 MMBtu/hr) heat duty	1	0

Case B4B – Account 10: Slag Recovery and Handling

Equipment No.	Description	Type	Design Condition	Operating Qty.	Spares
1	Slag Quench Tank	Water bath	234,000 liters (62,000 gal)	2	0
2	Slag Crusher	Roll	12 tonne/hr (14 tph)	2	0

Equipment No.	Description	Type	Design Condition	Operating Qty.	Spares
3	Slag Depressurizer	Proprietary	12 tonne/hr (14 tph)	2	0
4	Slag Receiving Tank	Horizontal, weir	141,000 liters (37,000 gal)	2	0
5	Black Water Overflow Tank	Shop fabricated	64,000 liters (17,000 gal)	2	0
6	Slag Conveyor	Drag chain	12 tonne/hr (14 tph)	2	0
7	Slag Separation Screen	Vibrating	12 tonne/hr (14 tph)	2	0
8	Coarse Slag Conveyor	Belt/bucket	12 tonne/hr (14 tph)	2	0
9	Fine Ash Settling Tank	Vertical, gravity	200,000 liters (53,000 gal)	2	0
10	Fine Ash Recycle Pumps	Horizontal centrifugal	50 lpm @ 14 m H_2O (10 gpm @ 46 ft H_2O)	2	2
11	Grey Water Storage Tank	Field erected	64,000 liters (17,000 gal)	2	0
12	Grey Water Pumps	Centrifugal	230 lpm @ 430 m H_2O (60 gpm @ 1,420 ft H_2O)	2	2
13	Slag Storage Bin	Vertical, field erected	900 tonne (1,000 tons)	2	0
14	Unloading Equipment	Telescoping chute	100 tonne/hr (110 tph)	1	0

Case B4B – Account 11: Accessory Electric Plant

Equipment No.	Description	Type	Design Condition	Operating Qty.	Spares
1	CTG Transformer	Oil-filled	24 kV/345 kV, 260 MVA, 3-ph, 60 Hz	2	0
2	STG Transformer	Oil-filled	24 kV/345 kV, 280 MVA, 3-ph, 60 Hz	1	0
3	High Voltage Auxiliary Transformer	Oil-filled	345 kV/13.8 kV, 80 MVA, 3-ph, 60 Hz	2	0
4	Medium Voltage Transformer	Oil-filled	24 kV/4.16 kV, 42 MVA, 3-ph, 60 Hz	1	1
5	Low Voltage Transformer	Dry ventilated	4.16 kV/480 V, 6 MVA, 3-ph, 60 Hz	1	1
6	CTG Isolated Phase Bus Duct and Tap Bus	Aluminum, self-cooled	24 kV, 3-ph, 60 Hz	2	0
7	STG Isolated Phase Bus Duct and Tap Bus	Aluminum, self-cooled	24 kV, 3-ph, 60 Hz	1	0
8	Medium Voltage Switchgear	Metal clad	4.16 kV, 3-ph, 60 Hz	1	1
9	Low Voltage Switchgear	Metal enclosed	480 V, 3-ph, 60 Hz	1	1
10	Emergency Diesel Generator	Sized for emergency shutdown	750 kW, 480 V, 3-ph, 60 Hz	1	0

Case B4B – Account 12: Instrumentation and Control

Equipment No.	Description	Type	Design Condition	Operating Qty.	Spares
1	DCS - Main Control	Monitor/keyboard; Operator printer (laser color); Engineering printer (laser B&W)	Operator stations/printers and engineering stations/printers	1	0
2	DCS - Processor	Microprocessor with redundant input/output	N/A	1	0
3	DCS - Data Highway	Fiber optic	Fully redundant, 25% spare	1	0

3.3.11 Case B4B – Cost Estimating

The cost estimating methodology was described previously in Section 2.7. Exhibit 3-84 shows a detailed breakdown of the capital costs; Exhibit 3-85 shows the owner's costs, TOC, and TASC; Exhibit 3-86 shows the initial and annual O&M costs; and Exhibit 3-87 shows the LCOE breakdown.

The estimated TPC of the E-Gas™ gasifier with CO_2 capture is $5,177/kW. Process contingency represents 5.1 percent of the TPC, and project contingency represents 15.2 percent. The LCOE, including CO_2 T&S costs of $8.2/MWh, is $151.3/MWh.

Exhibit 3-84. Case B4B total plant cost details

Case:		B4B	– E-Gas™ IGCC w/ CO_2				Estimate Type:			Conceptual	
Plant Size (MW, net):		557					Cost Base:			Dec 2018	
Item No.	Description	Equipment Cost	Material Cost	Labor		Bare Erected Cost	Eng'g CM H.O.& Fee	Contingencies		Total Plant Cost	
				Direct	Indirect			Process	Project	$/1,000	$/kW
1						Coal Handling					
1.1	Coal Receive & Unload	$990	$0	$477	$0	$1,467	$220	$0	$337	$2,024	$4
1.2	Coal Stackout & Reclaim	$3,235	$0	$774	$0	$4,009	$601	$0	$922	$5,533	$10
1.3	Coal Conveyors & Yard Crush	$30,868	$0	$7,856	$0	$38,724	$5,809	$0	$8,907	$53,440	$96
1.4	Other Coal Handling	$4,807	$0	$1,082	$0	$5,889	$883	$0	$1,354	$8,127	$15
1.9	Coal & Sorbent Handling Foundations	$0	$87	$226	$0	$313	$47	$0	$72	$432	$1
	Subtotal	**$39,900**	**$87**	**$10,415**	**$0**	**$50,402**	**$7,560**	**$0**	**$11,592**	**$69,555**	**$125**
2						Coal Preparation & Feed					
2.1	Coal Crushing & Drying	$2,399	$145	$345	$0	$2,888	$433	$0	$664	$3,985	$7
2.2	Prepared Coal Storage & Feed	$7,369	$1,769	$1,141	$0	$10,279	$1,542	$0	$2,364	$14,185	$25
2.3	Slurry Coal Injection System	$7,211	$0	$3,163	$0	$10,374	$1,556	$0	$2,386	$14,316	$26
2.4	Miscellaneous Coal Preparation & Feed	$728	$532	$1,566	$0	$2,825	$424	$0	$650	$3,898	$7
2.9	Coal & Sorbent Feed Foundation	$0	$1,770	$1,519	$0	$3,289	$493	$0	$756	$4,539	$8
	Subtotal	**$17,706**	**$4,215**	**$7,733**	**$0**	**$29,655**	**$4,448**	**$0**	**$6,821**	**$40,924**	**$73**
3						Feedwater & Miscellaneous BOP Systems					
3.1	Feedwater System	$2,193	$3,759	$1,880	$0	$7,831	$1,175	$0	$1,801	$10,807	$19
3.2	Water Makeup & Pretreating	$5,288	$529	$2,996	$0	$8,813	$1,322	$0	$3,040	$13,175	$24
3.3	Other Feedwater Subsystems	$1,133	$372	$353	$0	$1,858	$279	$0	$427	$2,564	$5
3.4	Service Water Systems	$1,580	$3,017	$9,768	$0	$14,365	$2,155	$0	$4,956	$21,476	$39
3.5	Other Boiler Plant Systems	$294	$107	$268	$0	$669	$100	$0	$154	$923	$2
3.6	Natural Gas Pipeline and Start-Up System	$7,251	$312	$234	$0	$7,797	$1,170	$0	$1,793	$10,760	$19
3.7	Waste Water Treatment Equipment	$7,468	$0	$4,577	$0	$12,045	$1,807	$0	$4,156	$18,008	$32
3.8	Vacuum Flash, Brine Concentrator, & Crystallizer	$25,507	$0	$15,795	$0	$41,303	$6,195	$0	$14,250	$61,748	$111
3.9	Miscellaneous Plant Equipment	$15,441	$2,025	$7,847	$0	$25,313	$3,797	$0	$8,733	$37,843	$68
	Subtotal	**$66,156**	**$10,120**	**$43,718**	**$0**	**$119,995**	**$17,999**	**$0**	**$39,310**	**$177,304**	**$318**
4						Gasifier, ASU, & Accessories					
4.1	Gasifier & Auxiliaries (E-GAS)	$375,564	$0	$209,329	$0	$584,893	$87,734	$81,885	$113,177	$867,689	$1,558
4.2	Syngas Cooler	$50,059	$0	$27,901	$0	$77,960	$11,694	$10,914	$15,085	$115,654	$208
4.3	Air Separation Unit/Oxidant Compression	$57,206	$0	$21,734	$0	$78,940	$11,841	$0	$13,617	$104,398	$187
4.5	Miscellaneous Gasification Equipment	$3,895	$0	$2,171	$0	$6,066	$910	$0	$1,046	$8,023	$14

Case:		B4B	– E-Gas™ IGCC w/ CO_2					Estimate Type:		Conceptual	
Plant Size (MW, net):		557						Cost Base:		Dec 2018	
Item No.	Description	Equipment Cost	Material Cost	Labor		Bare Erected Cost	Eng'g CM H.O.& Fee	Contingencies		Total Plant Cost	
				Direct	Indirect			Process	Project	$/1,000	$/kW
4.6	Low Temperature Heat Recovery & Flue Gas Saturation	$45,010	$0	$17,100	$0	$62,110	$9,316	$0	$14,285	$85,711	$154
4.7	Flare Stack System	$1,931	$0	$341	$0	$2,271	$341	$0	$522	$3,135	$6
4.15	Major Component Rigging	$217	$0	$121	$0	$338	$51	$0	$58	$446	$1
4.16	Gasification Foundations	$0	$478	$285	$0	$762	$114	$0	$219	$1,096	$2
	Subtotal	**$533,881**	**$478**	**$278,982**	**$0**	**$813,341**	**$122,001**	**$92,799**	**$158,011**	**$1,186,152**	**$2,130**
5						Syngas Cleanup					
5.1	Double Stage Selexol	$163,403	$0	$66,742	$0	$230,146	$34,522	$46,029	$62,139	$372,836	$670
5.2	Sulfur Removal	w/5.1	w/5.1	w/5.1	$0	$0	$0	$0	$0	$0	$0
5.3	Elemental Sulfur Plant	$48,542	$9,461	$62,201	$0	$120,204	$18,031	$0	$27,647	$165,881	$298
5.4	Carbon Dioxide (CO_2) Compression & Drying	$32,478	$4,872	$14,073	$0	$51,423	$7,713	$0	$11,827	$70,963	$127
5.5	Carbon Dioxide (CO_2) Compressor Aftercooler	$485	$77	$208	$0	$769	$115	$0	$177	$1,061	$2
5.6	Mercury Removal (Carbon Bed)	$485	$0	$367	$0	$852	$128	$43	$204	$1,227	$2
5.7	Water Gas Shift (WGS) Reactors	$132,230	$0	$52,861	$0	$185,091	$27,764	$0	$42,571	$255,425	$459
5.9	Particulate Removal	$1,522	$0	$652	$0	$2,174	$326	$0	$375	$2,875	$5
5.10	Blowback Gas Systems	$779	$438	$244	$0	$1,462	$219	$0	$336	$2,017	$4
5.11	Fuel Gas Piping	$0	$962	$629	$0	$1,591	$239	$0	$366	$2,196	$4
5.12	Gas Cleanup Foundations	$0	$227	$153	$0	$380	$57	$0	$131	$568	$1
	Subtotal	**$379,923**	**$16,036**	**$198,131**	**$0**	**$594,091**	**$89,114**	**$46,072**	**$145,774**	**$875,050**	**$1,571**
6						Combustion Turbine & Accessories					
6.1	Combustion Turbine Generator	$76,557	$0	$5,425	$0	$81,983	$12,297	$8,198	$15,372	$117,850	$212
6.3	Combustion Turbine Accessories	$2,687	$0	$164	$0	$2,851	$428	$0	$492	$3,770	$7
6.4	Compressed Air Piping	$0	$509	$333	$0	$843	$126	$0	$194	$1,163	$2
6.5	Combustion Turbine Foundations	$0	$216	$250	$0	$466	$70	$0	$161	$697	$1
	Subtotal	**$79,245**	**$726**	**$6,172**	**$0**	**$86,143**	**$12,921**	**$8,198**	**$16,218**	**$123,480**	**$222**
7						HRSG, Ductwork, & Stack					
7.1	Heat Recovery Steam Generator	$33,951	$0	$6,573	$0	$40,524	$6,079	$0	$6,990	$53,592	$96
7.2	Heat Recovery Steam Generator Accessories	$12,122	$0	$2,347	$0	$14,469	$2,170	$0	$2,496	$19,136	$34
7.3	Ductwork	$0	$1,088	$763	$0	$1,851	$278	$0	$426	$2,555	$5
7.4	Stack	$9,256	$0	$3,454	$0	$12,709	$1,906	$0	$2,192	$16,808	$30
7.5	Heat Recovery Steam Generator, Ductwork & Stack Foundations	$0	$230	$231	$0	$461	$69	$0	$159	$690	$1
	Subtotal	**$55,328**	**$1,318**	**$13,368**	**$0**	**$70,014**	**$10,502**	**$0**	**$12,264**	**$92,780**	**$167**
8						Steam Turbine & Accessories					
8.1	Steam Turbine Generator & Accessories	$37,697	$0	$5,533	$0	$43,230	$6,484	$0	$7,457	$57,171	$103
8.2	Steam Turbine Plant Auxiliaries	$1,818	$0	$4,150	$0	$5,968	$895	$0	$1,029	$7,892	$14

Case:		B4B	– E-Gas™ IGCC w/ CO_2				Estimate Type:			Conceptual	
Plant Size (MW, net):		557					Cost Base:			Dec 2018	
Item No.	Description	Equipment Cost	Material Cost	Labor Direct	Labor Indirect	Bare Erected Cost	Eng'g CM H.O.& Fee	Contingencies Process	Contingencies Project	Total Plant Cost $/1,000	Total Plant Cost $/kW
8.3	Condenser & Auxiliaries	$7,017	$0	$3,955	$0	$10,971	$1,646	$0	$1,893	$14,510	$26
8.4	Steam Piping	$7,382	$0	$3,201	$0	$10,583	$1,587	$0	$3,043	$15,213	$27
8.5	Turbine Generator Foundations	$0	$283	$501	$0	$784	$118	$0	$271	$1,173	$2
	Subtotal	**$53,914**	**$283**	**$17,339**	**$0**	**$71,537**	**$10,730**	**$0**	**$13,692**	**$95,960**	**$172**
9						Cooling Water System					
9.1	Cooling Towers	$11,714	$0	$3,783	$0	$15,497	$2,325	$0	$2,673	$20,495	$37
9.2	Circulating Water Pumps	$1,546	$0	$116	$0	$1,662	$249	$0	$287	$2,198	$4
9.3	Circulating Water System Auxiliaries	$10,622	$0	$1,509	$0	$12,131	$1,820	$0	$2,093	$16,044	$29
9.4	Circulating Water Piping	$0	$5,975	$5,411	$0	$11,385	$1,708	$0	$2,619	$15,712	$28
9.5	Make-up Water System	$630	$0	$867	$0	$1,497	$225	$0	$344	$2,066	$4
9.6	Component Cooling Water System	$217	$259	$178	$0	$654	$98	$0	$150	$902	$2
9.7	Circulating Water System Foundations	$0	$493	$876	$0	$1,369	$205	$0	$472	$2,047	$4
	Subtotal	**$24,730**	**$6,727**	**$12,740**	**$0**	**$44,196**	**$6,629**	**$0**	**$8,638**	**$59,464**	**$107**
10						Slag Recovery & Handling					
10.1	Slag Dewatering & Cooling	$1,997	$0	$978	$0	$2,975	$446	$0	$513	$3,935	$7
10.2	Gasifier Ash Depressurization	$1,131	$0	$554	$0	$1,685	$253	$0	$291	$2,229	$4
10.3	Cleanup Ash Depressurization	$508	$0	$249	$0	$758	$114	$0	$131	$1,002	$2
10.6	Ash Storage Silos	$1,135	$0	$1,225	$0	$2,359	$354	$0	$407	$3,120	$6
10.7	Ash Transport & Feed Equipment	$437	$0	$102	$0	$539	$81	$0	$93	$713	$1
10.8	Miscellaneous Ash Handling Equipment	$63	$77	$23	$0	$162	$24	$0	$28	$215	$0
10.9	Ash/Spent Sorbent Foundation	$0	$446	$587	$0	$1,032	$155	$0	$356	$1,543	$3
	Subtotal	**$5,271**	**$523**	**$3,717**	**$0**	**$9,511**	**$1,427**	**$0**	**$1,819**	**$12,756**	**$23**
11						Accessory Electric Plant					
11.1	Generator Equipment	$2,721	$0	$2,053	$0	$4,773	$716	$0	$823	$6,313	$11
11.2	Station Service Equipment	$4,244	$0	$364	$0	$4,609	$691	$0	$795	$6,095	$11
11.3	Switchgear & Motor Control	$25,612	$0	$4,444	$0	$30,056	$4,508	$0	$5,185	$39,749	$71
11.4	Conduit & Cable Tray	$0	$113	$327	$0	$440	$66	$0	$127	$633	$1
11.5	Wire & Cable	$0	$1,554	$2,778	$0	$4,332	$650	$0	$1,245	$6,227	$11
11.6	Protective Equipment	$241	$0	$837	$0	$1,078	$162	$0	$186	$1,426	$3
11.7	Standby Equipment	$852	$0	$786	$0	$1,638	$246	$0	$283	$2,167	$4
11.8	Main Power Transformers	$6,425	$0	$131	$0	$6,557	$983	$0	$1,131	$8,671	$16
11.9	Electrical Foundations	$0	$74	$188	$0	$263	$39	$0	$91	$393	$1
	Subtotal	**$40,096**	**$1,742**	**$11,908**	**$0**	**$53,745**	**$8,062**	**$0**	**$9,865**	**$71,672**	**$129**
12						Instrumentation & Control					
12.1	Integrated Gasification and Combined Cycle Control Equipment	$639	$0	$356	$0	$995	$149	$0	$172	$1,316	$2
12.2	Combustion Turbine Control Equipment	$686	$0	$49	$0	$735	$110	$0	$127	$972	$2

Case:		B4B	– E-Gas™ IGCC w/ CO_2				Estimate Type:			Conceptual	
Plant Size (MW, net):		557					Cost Base:			Dec 2018	
Item No.	Description	Equipment Cost	Material Cost	Labor		Bare Erected Cost	Eng'g CM H.O.& Fee	Contingencies		Total Plant Cost	
				Direct	Indirect			Process	Project	$/1,000	$/kW
12.3	Steam Turbine Control Equipment	$637	$0	$94	$0	$731	$110	$0	$126	$966	$2
12.4	Other Major Component Control Equipment	$1,225	$0	$834	$0	$2,059	$309	$103	$371	$2,842	$5
12.5	Signal Processing Equipment	$950	$0	$31	$0	$981	$147	$0	$169	$1,298	$2
12.6	Control Boards, Panels & Racks	$275	$0	$180	$0	$455	$68	$23	$109	$656	$1
12.7	Distributed Control System Equipment	$9,974	$0	$326	$0	$10,300	$1,545	$515	$1,854	$14,213	$26
12.8	Instrument Wiring & Tubing	$496	$397	$1,588	$0	$2,482	$372	$124	$744	$3,722	$7
12.9	Other Instrumentation & Controls Equipment	$1,113	$0	$552	$0	$1,665	$250	$83	$300	$2,298	$4
	Subtotal	**$15,997**	**$397**	**$4,009**	**$0**	**$20,403**	**$3,060**	**$848**	**$3,972**	**$28,283**	**$51**
13						**Improvements to Site**					
13.1	Site Preparation	$0	$424	$9,621	$0	$10,046	$1,507	$0	$3,466	$15,019	$27
13.2	Site Improvements	$0	$1,912	$2,703	$0	$4,615	$692	$0	$1,592	$6,899	$12
13.3	Site Facilities	$2,985	$0	$3,350	$0	$6,335	$950	$0	$2,186	$9,471	$17
	Subtotal	**$2,985**	**$2,337**	**$15,675**	**$0**	**$20,996**	**$3,149**	**$0**	**$7,244**	**$31,389**	**$56**
14						**Buildings & Structures**					
14.1	Combustion Turbine Area	$0	$314	$177	$0	$491	$74	$0	$85	$649	$1
14.3	Steam Turbine Building	$0	$2,770	$3,944	$0	$6,714	$1,007	$0	$1,158	$8,879	$16
14.4	Administration Building	$0	$883	$641	$0	$1,524	$229	$0	$263	$2,016	$4
14.5	Circulation Water Pumphouse	$0	$146	$78	$0	$224	$34	$0	$39	$296	$1
14.6	Water Treatment Buildings	$0	$353	$345	$0	$698	$105	$0	$120	$923	$2
14.7	Machine Shop	$0	$488	$334	$0	$823	$123	$0	$142	$1,088	$2
14.8	Warehouse	$0	$381	$246	$0	$626	$94	$0	$108	$829	$1
14.9	Other Buildings & Structures	$0	$279	$217	$0	$496	$74	$0	$86	$656	$1
14.10	Waste Treating Building & Structures	$0	$762	$1,455	$0	$2,217	$333	$0	$382	$2,932	$5
	Subtotal	**$0**	**$6,377**	**$7,436**	**$0**	**$13,813**	**$2,072**	**$0**	**$2,383**	**$18,267**	**$33**
	Total	**$1,315,133**	**$51,365**	**$631,344**	**$0**	**$1,997,841**	**$299,676**	**$147,918**	**$437,603**	**$2,883,037**	**$5,177**

Exhibit 3-85. Case B4B owner's costs

Description	$/1,000	$/kW
Pre-Production Costs		
6 Months All Labor	$23,578	$42
1 Month Maintenance Materials	$5,856	$11
1 Month Non-Fuel Consumables	$1,280	$2
1 Month Waste Disposal	$735	$1
25% of 1 Months Fuel Cost at 100% CF	$2,286	$4
2% of TPC	$57,661	$104
Total	**$91,396**	**$164**
Inventory Capital		
60-day supply of fuel and consumables at 100% CF	$20,415	$37
0.5% of TPC (spare parts)	$14,415	$26
Total	**$34,830**	**$63**
Other Costs		
Initial Cost for Catalyst and Chemicals	$34,798	$62
Land	$900	$2
Other Owner's Costs	$432,456	$777
Financing Costs	$77,842	$140
Total Overnight Costs (TOC)	**$3,555,259**	**$6,384**
TASC Multiplier (IOU, 35 year)	1.154	
Total As-Spent Cost (TASC)	**$4,104,233**	**$7,370**

Exhibit 3-86. Case B4B initial and annual operating and maintenance costs

Case:	B4B	– E-Gas™ IGCC w/ CO_2			Cost Base:	Dec 2018
Plant Size (MW, net):	557	Heat Rate-net (Btu/kWh):		10,101	Capacity Factor (%):	80
Operating & Maintenance Labor						
Operating Labor				**Operating Labor Requirements per Shift**		
Operating Labor Rate (base):		38.50	**$/hour**	Skilled Operator:		2.0
Operating Labor Burden:		30.00	**% of base**	Operator:		11.0
Labor O-H Charge Rate:		25.00	**% of labor**	Foreman:		1.0
				Lab Techs, etc.:		3.0
				Total:		**17.0**
Fixed Operating Costs						
					Annual Cost	
					($)	**($/kW-net)**
Annual Operating Labor:					$7,453,446	$13.384
Maintenance Labor:					$30,271,890	$54.360
Administrative & Support Labor:					$9,431,334	$16.936
Property Taxes and Insurance:					$57,660,743	$103.542
Total:					**$104,817,413**	**$188.223**
Variable Operating Costs						
					($)	**($/MWh-net)**
Maintenance Material:					$56,219,224	$14.40553
Consumables						
	Initial Fill	**Per Day**	**Per Unit**	**Initial Fill**		
Water (gal/1000):	0	3,742	$1.90	$0	$2,075,881	$0.53192
Makeup and Waste Water Treatment Chemicals (ton):	0	11.1	$550.00	$0	$1,790,035	$0.45868
Sulfur-Impregnated Activated Carbon (ton):	107	0.147	$12,000.00	$1,288,576	$515,431	$0.13207
Water Gas Shift (WGS) Catalyst (ft^3):	25,790	17.7	$480.00	$12,379,238	$2,475,848	$0.63441
Selexol Solution (gal):	556,047	55.1	$38.00	$21,129,771	$611,819	$0.15677
Sodium Hydroxide (50 wt%, ton):	0	20.0	$600.00	$0	$3,496,413	$0.89592
Sulfuric Acid (98 wt%, ton):	0	0.355	$210.00	$0	$21,743	$0.00557
Claus Catalyst (ft^3):	w/equip.	2.00	$48.00	$0	$28,031	$0.00718
Triethylene Glycol (gal):	w/equip.	639	$6.80	$0	$1,268,343	$0.32500
Subtotal:				**$34,797,585**	**$12,283,543**	**$3.14752**
Waste Disposal						
Sulfur-Impregnated Activated Carbon (ton):	0	0.147	$80.00	$0	$3,436	$0.00088
Water Gas Shift Catalyst (ft^3):	0	17.7	$2.50	$0	$12,895	$0.00330
Selexol Solution (gal):	0	55.1	$0.35	$0	$5,635	$0.00144
Claus Catalyst (ft^3):	0	2.00	$2.50	$0	$1,460	$0.00037
Crystallizer Solids (ton):	0	37.7	$38.00	$0	$418,690	$0.10728
Slag (ton):	0	591	$38.00	$0	$6,552,985	$1.67913
Triethylene Glycol (gal):	0	639	$0.35	$0	$65,282	$0.01673
Subtotal:				**$0**	**$7,060,384**	**$1.80914**
By-Products						
Sulfur (tons):	0	145	$0.00	$0	$0	$0.00000
Subtotal:				**$0**	**$0**	**$0.00000**
Variable Operating Costs Total:				**$34,797,585**	**$75,563,152**	**$19.36218**
Fuel Cost						
Illinois Number 6 (ton):	0	5,786	$51.96	$0	$87,784,958	$22.49388
Total:				**$0**	**$87,784,958**	**$22.49388**

Exhibit 3-87. Case B4B LCOE breakdown

Component	Value, $/MWh	Percentage
Capital	74.4	49%
Fixed	26.9	18%
Variable	19.4	13%
Fuel	22.5	15%
Total (Excluding T&S)	**143.1**	**N/A**
CO_2 T&S	8.2	5%
Total (Including T&S)	**151.3**	**N/A**

3.4 General Electric Power IGCC Cases

This section contains an evaluation of three GEP plant designs (radiant-only [with and without CO_2 capture] and quench-only [with CO_2 capture]). Cases B5A and B5B are based on the GEP gasifier in the "radiant-only" configuration and Case B5B-Q is based on the GEP gasifier in the "quench-only" configuration. GEP offers three design configurations [100]:

- Quench: In this configuration, the hot syngas exiting the gasifier passes through a pool of water to quench the temperature to 288°C (550°F) before entering the syngas scrubber. It is the simplest design, but also the least efficient.
- Radiant: In this configuration, the hot syngas exiting the gasifier passes through a radiant syngas cooler where it is cooled from about 1,316°C (2,400°F) to 677°C (1,250°F), and then passes through a water quench where the syngas is further cooled to about 232°C (450°F) prior to entering the syngas scrubber. Relative to the quench configuration, the radiant design offers increased output, higher efficiency, a reduction in wastewater emissions, and improved reliability/availability. This configuration was chosen by GEP and Bechtel for the design of their reference plant.
- Radiant-Convective: In this configuration, the hot syngas exiting the gasifier passes through a radiant syngas cooler where it is cooled from about 1,316°C (2,400°F) to 760°C (1,400°F), and then through a convective syngas cooler where the syngas is further cooled to about 371°C (700°F) prior to entering additional HXs or the scrubber. This configuration has the highest overall efficiency, but at the expense of the lowest availability. This was the original design configuration of Tampa Electric's Polk Power Station. However, due to extensive downtime, the convective HX was subsequently removed from service.

GEP also offers an extended slurry technology that can improve the slurry concentrations for higher moisture content coals. This technology is not considered in this report. Note that the radiant configuration includes a water quench and, based on functionality, would be more appropriately named radiant-quench. The term radiant is used to distinguish it from the radiant-convective configuration. Since radiant is the terminology used by GEP, it is used throughout this report.

The balance of this section is organized in an analogous manner to Section 3.2 and Section 3.3:

- Gasifier Background
- Process System Description for Case B5A
- Key Assumptions for Cases B5A, B5B, and B5B-Q
- Sparing Philosophy for Cases B5A, B5B, and B5B-Q
- Performance Results for Case B5A
- Equipment List for Case B5A
- Cost Estimates for Case B5A
- Process and System Description, Performance Results, Equipment Lists, and Cost Estimates for Cases B5B and B5B-Q

3.4.1 Gasifier Background

As mentioned in Section 3.2.1 and Section 3.3.1, the "Coal Gasification Guidebook: Status, Application, and Technologies" report published by the EPRI provides a detailed history of the development of several types of gasifier technology, including the GEP gasifier, as well as gasifier capacity, distinguishing characteristics, and important coal characteristics. [95]

The Tampa Electric Polk plant was designed to use the radiant-convective GEP gasifier configuration. As stated previously, due to extensive downtime, the convective HX was removed from service, and the unit now operates in the radiant configuration. The daily coal-handling design capacity of this unit was 2,268 tonnes (2,500 tons) of bituminous coal. The dry gas design production rate was 0.19 million Nm^3/hr (6.7 million scfh) with an energy content of about 1,897 million kJ/hr (HHV) (1,800 million Btu/hr). This size matches the F-Class CTs that are used at Tampa. The largest GE gasifier is the unit at Duke Edwardsport, which is also a radiant configuration, and has a daily capacity (dry basis) of approximately 2,268 tonnes (2,500 tons) of coal per gasifier. The Duke Edwardsport gasifier operates at a pressure of 4.1 MPa (600 psia). [101]

The GEP gasifier operates at the highest pressure of the three gasifiers in this report, 5.6 MPa (815 psia) compared to 4.2 MPa (615 psia) for E-Gas™ and Shell. The GEP gasifier can operate at pressures as high as 8.7 MPa (1,260 psia), as demonstrated by the quench gasifier operating at the Pucheng project in China. [102]

The relatively high H_2/CO ratio and CO_2 content of the GEP gasification fuel gas helps achieve low NOx and CO emissions in even the higher-temperature advanced CTs. [95]

Coals with low concentrations of ash and soluble salts are preferred for use with the GEP gasifiers, as high levels of ash increase the O_2 requirement and soluble salts may build-up in concentration when high levels of process condensate recycle are used. [95]

The slurry feeding also favors the use of high-rank coals, such as bituminous coal, since their low inherent moisture content increases the moisture-free solids content of the slurry and thereby reduces O_2 requirements. [95]

3.4.2 Key System Assumptions

System assumptions for cases B5A, B5B, and B5B-Q, GEP IGCC with and without CO_2 capture, are presented in Exhibit 3-88.

Exhibit 3-88. GEP IGCC plant study configuration matrix

Case	B5A	B5B	B5B-Q
Gasifier Pressure, MPa (psia)	5.6 (815)		
O_2:Coal Ratio, kg O_2/kg As-Received coal	0.760		
Carbon Conversion, %	98		
Syngas HHV at Gasifier Outlet, kJ/Nm^3 (Btu/scf)[A]	8,956 (240)	8,960 (240)	8,958 (240)
Steam Cycle, MPa/°C/°C (psig/°F/°F)	12.4/566/566 (1,800/1,051/1,051)	12.4/535/535 (1,800/996/996)	12.4/535/535 (1,800/996/996)
Condenser Pressure, mm Hg (in. Hg)	51 (2.0)		
Combustion Turbine	2x State-of-the-Art 2008 F-Class (232 MW output each)		
Gasifier Technology	GEP Radiant	GEP Radiant	GEP Quench
Oxidant	95 vol% O_2		
Coal	Illinois No. 6		
Coal Slurry Solids Content, %	63		
COS Hydrolysis	Yes	Occurs in WGS	Occurs in WGS
WGS	No	Yes	Yes
H_2S Separation	Selexol	Selexol 1st Stage	Selexol 1st Stage
Sulfur Removal, %	99.9	~100.0	~100.0
Sulfur Recovery	Claus Plant with Tail Gas Recycle to Selexol/ Elemental Sulfur		
Particulate Control	Water Quench, Scrubber, and AGR Absorber		
Chloride Control	Venturi Scrubber, Vacuum Flash, Brine Concentrator, Crystallizer		
Mercury Control	Carbon Bed		
NOx Control	MNQC (LNB) and N_2 Dilution		
CO_2 Separation	N/A	Selexol 2nd Stage	Selexol 2nd Stage
Overall Carbon Capture	N/A	90.0%	90.0%
CO_2 Sequestration	N/A	Off-site Saline Formation	Off-site Saline Formation

[A]Syngas measurement is reflected before syngas quench

3.4.2.1 Balance of Plant – Cases B5A, B5B, and B5B-Q

The balance of plant assumptions are common to all three cases and are presented in Exhibit 3-22.

3.4.3 Sparing Philosophy

The sparing philosophy for cases B5A, B5B, and B5B-Q is provided below. Dual trains are used to accommodate the size of commercial CTs. There is no redundancy other than normal sparing of rotating equipment. The plant design consists of the following major subsystems:

- Two ASUs (2 x 50 percent)
- Two trains of slurry preparation and slurry pumps (2 x 50 percent)
- Two trains of gasification, including gasifier, SGC, quench and scrubber (2 x 50 percent)
- Two trains of syngas clean-up process (2 x 50 percent)
- Two trains of Selexol AGR, single-stage in Case B5A and two-stage in Case B5B, (2 x 50 percent) and one Claus-based SRU (1 x 100 percent)
- Two trains of CO_2 compression systems (2 x 50 percent) in cases B5B and B5B-Q
- Two trains of process water treatment systems (2 x 50 percent)
- Two CT/HRSG tandems (2 x 50 percent)
- One steam turbine (1 x 100 percent)

3.4.4 Case B5A – GEP Radiant IGCC Without CO_2 Capture Process Description

In this section, the GEP gasification process for Case B5A is described. The system descriptions follow the BFD provided in Exhibit 3-89 with the associated stream tables—providing process data for the numbered streams in the BFD—provided in Exhibit 3-90.

3.4.4.1 Coal Preparation and Feed Systems

Coal receiving and handling is common to all cases and was covered in Section 3.1.1. The receiving and handling subsystem ends at the coal silo. Coal is then fed onto a conveyor by vibratory feeders located below each silo. The conveyor feeds the coal to an inclined conveyor that delivers the coal to the rod mill feed hopper. The feed hopper provides a surge capacity of about two hours and contains two hopper outlets. Each hopper outlet discharges onto a weigh feeder, which, in turn, feeds a rod mill. Each rod mill is sized to process 55 percent of the coal feed requirements of the gasifier. The rod mill grinds the coal (stream 8) and wets it with process and slag recovery water (stream 7) transferred from the slurry water tank by the slurry water pumps. The coal slurry is discharged through a trommel screen into the rod mill discharge tank, and then the slurry is pumped to the slurry storage tanks. The dry solids concentration of the final slurry is 63 percent. The Polk Power Station operates at a slurry concentration of 62–68 percent using bituminous coal, and ConocoPhillips presented a paper showing the slurry concentration of Illinois No. 6 coal as 63 percent. [99]

The coal grinding system is equipped with a dust suppression system consisting of water sprays aided by a wetting agent. The degree of dust suppression required depends on local

environmental regulations. All tanks are equipped with vertical agitators to keep the coal slurry solids suspended.

The equipment in the coal grinding and slurry preparation system is fabricated of materials appropriate for the abrasive environment present in the system. The tanks and agitators are rubber lined. The pumps are either rubber-lined or hardened metal to minimize erosion. Piping is fabricated of HDPE.

3.4.4.2 Gasifier

There are two GEP slurry feed, pressurized, downflow, entrained, slagging gasifiers, operating at 5.6 MPa (815 psia) and processing a total of 5,059 tonnes/day (5,577 tpd) of as-received coal.

The air separation plant supplies 4,073 tonnes/day (4,489 tpd) of 95 percent O_2 to the gasifiers (stream 4), which is fed through a fuel injector at the top of the gasifier vessel, along with the coal slurry feedstock. The coal slurry and the O_2 react in the gasifier at 1,316°C (2,400°F) to produce principally H_2 and CO with little CO_2 formed.

The heat in the gasifier liquefies coal ash. Hot syngas and molten solids from the reactor flow downward into a radiant HX where the syngas is cooled.

The largest operating GEP gasifier is the 2,268 tonne/day (2,500 tpd) unit at Polk Power Station. However, that unit operates at about 2.8 MPa (400 psia). The gasifier in this report will be able to process more coal and maintain the same gas residence time.

Exhibit 3-89. Case B5A block flow diagram, GEP IGCC without CO_2 capture

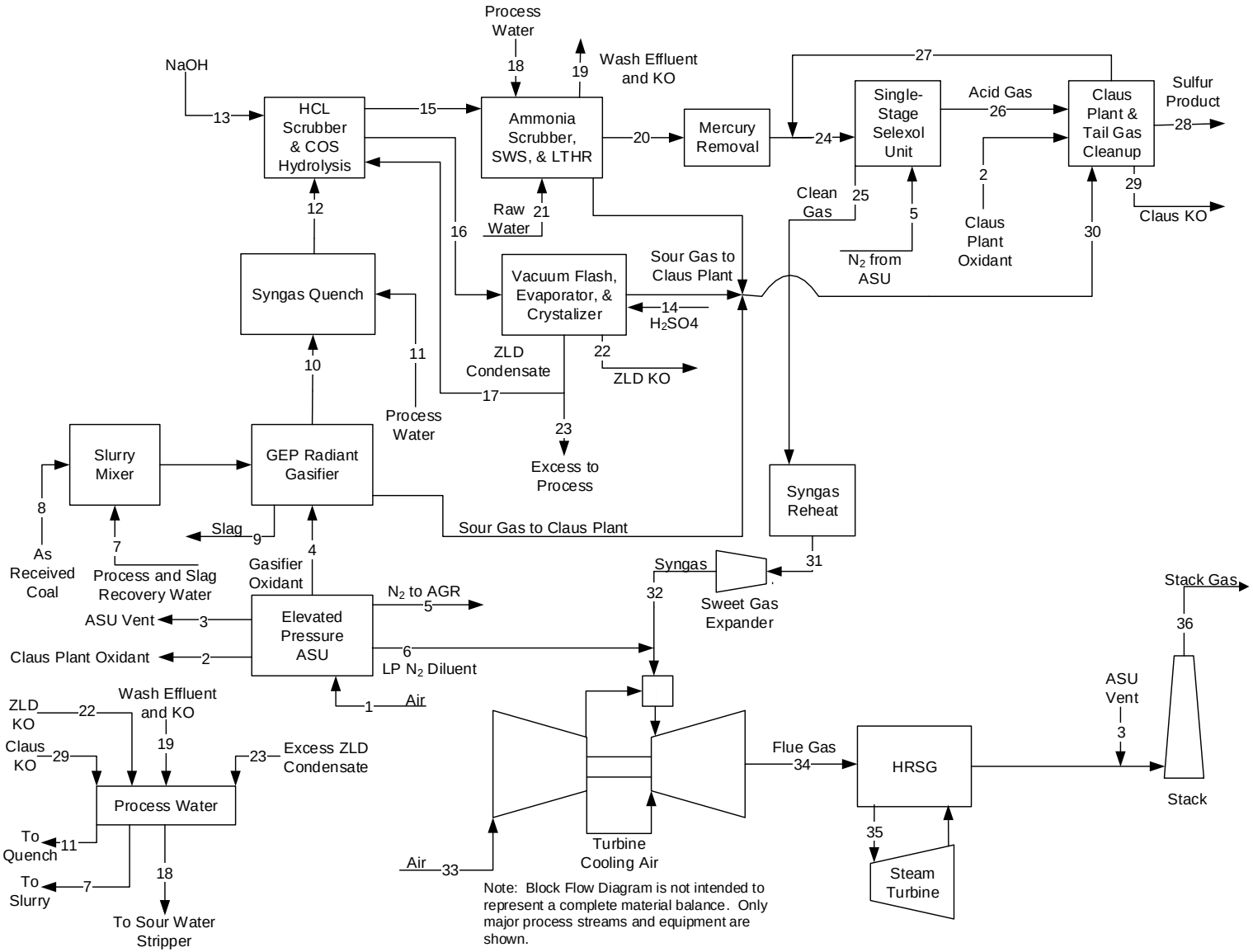

Exhibit 3-90. Case B5A stream table, GEP IGCC without capture

	1	2	3	4	5	6	7	8	9	10	11	12
V-L Mole Fraction												
Ar	0.0092	0.0343	0.0084	0.0343	0.0000	0.0000	0.0000	0.0000	0.0000	0.0082	0.0000	0.0058
CH_4	0.0000	0.0000	0.0000	0.0000	0.0000	0.0000	0.0000	0.0000	0.0000	0.0011	0.0000	0.0008
CO	0.0000	0.0000	0.0000	0.0000	0.0000	0.0000	0.0000	0.0000	0.0000	0.3569	0.0000	0.2513
CO_2	0.0003	0.0000	0.0015	0.0000	0.0000	0.0000	0.0002	0.0000	0.0000	0.1384	0.0003	0.0975
COS	0.0000	0.0000	0.0000	0.0000	0.0000	0.0000	0.0000	0.0000	0.0000	0.0002	0.0000	0.0001
H_2	0.0000	0.0000	0.0000	0.0000	0.0000	0.0000	0.0000	0.0000	0.0000	0.3410	0.0000	0.2401
H_2O	0.0099	0.0000	0.0305	0.0000	0.0000	0.0000	0.9925	0.0000	0.0000	0.1366	0.9917	0.3898
HCl	0.0000	0.0000	0.0000	0.0000	0.0000	0.0000	0.0000	0.0000	0.0000	0.0004	0.0000	0.0003
H_2S	0.0000	0.0000	0.0000	0.0000	0.0000	0.0000	0.0001	0.0000	0.0000	0.0073	0.0001	0.0052
N_2	0.7732	0.0157	0.9561	0.0157	0.9964	0.9964	0.0000	0.0000	0.0000	0.0078	0.0000	0.0055
NH_3	0.0000	0.0000	0.0000	0.0000	0.0000	0.0000	0.0073	0.0000	0.0000	0.0020	0.0079	0.0038
O_2	0.2074	0.9501	0.0034	0.9501	0.0036	0.0036	0.0000	0.0000	0.0000	0.0000	0.0000	0.0000
SO_2	0.0000	0.0000	0.0000	0.0000	0.0000	0.0000	0.0000	0.0000	0.0000	0.0000	0.0000	0.0000
NaCl	0.0000	0.0000	0.0000	0.0000	0.0000	0.0000	0.0000	0.0000	0.0000	0.0000	0.0000	0.0000
NaOH	0.0000	0.0000	0.0000	0.0000	0.0000	0.0000	0.0000	0.0000	0.0000	0.0000	0.0000	0.0000
Total	1.0000	1.0000	1.0000	1.0000	1.0000	1.0000	1.0000	0.0000	0.0000	1.0000	1.0000	1.0000
V-L Flowrate (kg_{mol}/hr)	24,843	83	5,492	5,268	402	13,520	4,807	0	0	22,077	9,285	31,362
V-L Flowrate (kg/hr)	716,900	2,661	152,943	169,693	11,271	378,935	86,596	0	0	443,960	167,286	611,238
Solids Flowrate (kg/hr)	0	0	0	0	0	0	0	210,799	23,128	0	0	0
Temperature (°C)	15	27	21	27	87	196	148	15	1,316	677	188	232
Pressure (MPa, abs)	0.10	0.86	0.45	6.48	5.41	2.69	5.79	0.10	5.62	5.51	6.33	5.47
Steam Table Enthalpy (kJ/kg)[A]	30.23	21.53	27.89	6.21	82.12	202.61	610.94	---	---	1,428.66	787.77	1,253.07
AspenPlus Enthalpy (kJ/kg)[B]	-97.58	-0.97	-333.75	-16.30	56.16	176.64	-15,262.49	-2,119.02	-727.24	-5,247.86	-15,075.57	-7,938.02
Density (kg/m^3)	1.2	11.2	5.2	87.9	50.3	19.2	903.8	---	---	13.8	862.8	26.2
V-L Molecular Weight	28.857	32.209	27.846	32.209	28.028	28.028	18.015	---	---	20.110	18.017	19.490
V-L Flowrate (lb_{mol}/hr)	54,770	182	12,109	11,615	887	29,806	10,598	0	0	48,671	20,470	69,140
V-L Flowrate (lb/hr)	1,580,493	5,867	337,183	374,109	24,848	835,408	190,912	0	0	978,764	368,803	1,347,550
Solids Flowrate (lb/hr)	0	0	0	0	0	0	0	464,732	50,989	0	0	0
Temperature (°F)	59	80	71	80	189	385	298	59	2,400	1,250	371	450
Pressure (psia)	14.7	125.0	65.0	940.0	785.0	390.0	840.0	14.7	815.0	798.7	918.7	793.1
Steam Table Enthalpy (Btu/lb)[A]	13.0	9.3	12.0	2.7	35.3	87.1	262.7	---	---	614.2	338.7	538.7
AspenPlus Enthalpy (Btu/lb)[B]	-42.0	-0.4	-143.5	-7.0	24.1	75.9	-6,561.7	-911.0	-312.7	-2,256.2	-6,481.3	-3,412.7
Density (lb/ft^3)	0.076	0.700	0.327	5.487	3.143	1.196	56.421	---	---	0.864	53.865	1.636

[A]Steam table reference conditions are 32.02°F & 0.089 psia

[B]Aspen thermodynamic reference state is the component's constituent elements in an ideal gas state at 25°C and 1 atm

Exhibit 3-90. Case B5A stream table, GEP IGCC without capture (continued)

	13	14	15	16	17	18	19	20	21	22	23	24
V-L Mole Fraction												
Ar	0.0000	0.0000	0.0063	0.0000	0.0000	0.0000	0.0000	0.0095	0.0000	0.0000	0.0000	0.0093
CH_4	0.0000	0.0000	0.0009	0.0000	0.0000	0.0000	0.0000	0.0013	0.0000	0.0000	0.0000	0.0013
CO	0.0000	0.0000	0.2734	0.0001	0.0000	0.0000	0.0000	0.4145	0.0000	0.0000	0.0000	0.3974
CO_2	0.0000	0.0000	0.1062	0.0008	0.0000	0.0003	0.0003	0.1600	0.0000	0.0008	0.0000	0.1840
COS	0.0000	0.0000	0.0000	0.0000	0.0000	0.0000	0.0000	0.0000	0.0000	0.0000	0.0000	0.0000
H_2	0.0000	0.0000	0.2612	0.0002	0.0000	0.0000	0.0000	0.3960	0.0000	0.0000	0.0000	0.3809
H_2O	0.6895	0.1000	0.3364	0.9942	0.9997	0.9917	0.9904	0.0012	0.9999	0.9918	0.9997	0.0012
HCl	0.0000	0.0000	0.0000	0.0000	0.0000	0.0000	0.0000	0.0000	0.0000	0.0000	0.0000	0.0000
H_2S	0.0000	0.0000	0.0057	0.0001	0.0000	0.0001	0.0001	0.0085	0.0000	0.0002	0.0000	0.0083
N_2	0.0000	0.0000	0.0060	0.0000	0.0000	0.0000	0.0000	0.0090	0.0000	0.0000	0.0000	0.0178
NH_3	0.0000	0.0000	0.0039	0.0018	0.0003	0.0079	0.0092	0.0000	0.0000	0.0072	0.0003	0.0000
O_2	0.0000	0.0000	0.0000	0.0000	0.0000	0.0000	0.0000	0.0000	0.0000	0.0000	0.0000	0.0000
SO_2	0.0000	0.0000	0.0000	0.0000	0.0000	0.0000	0.0000	0.0000	0.0000	0.0000	0.0000	0.0000
NaCl	0.0000	0.0000	0.0000	0.0026	0.0000	0.0000	0.0000	0.0000	0.0001	0.0000	0.0000	0.0000
NaOH	0.3105	0.0000	0.0000	0.0001	0.0000	0.0000	0.0000	0.0000	0.0000	0.0000	0.0000	0.0000
Total	1.0000	0.1000	1.0000	1.0000	1.0000	1.0000	1.0000	1.0000	1.0000	1.0000	1.0000	1.0000
V-L Flowrate (kg_{mol}/hr)	29	0	28,818	3,452	879	544	11,910	19,004	1,607	757	1,781	19,826
V-L Flowrate (kg/hr)	727	13	565,173	62,621	15,829	9,805	214,578	387,966	28,952	13,653	32,082	420,076
Solids Flowrate (kg/hr)	0	0	0	0	0	0	0	0	0	0	0	0
Temperature (°C)	16	15	216	202	89	111	121	29	15	29	89	37
Pressure (MPa, abs)	6.30	0.13	5.15	5.33	0.13	0.47	0.45	4.69	0.10	0.24	0.13	4.53
Steam Table Enthalpy (kJ/kg)[A]	-337.57	-8,206.86	1,098.98	851.40	369.32	447.06	486.70	34.25	62.75	107.94	369.32	42.36
AspenPlus Enthalpy (kJ/kg)[B]	-13,663.78	-8,526.27	-7,551.74	-15,001.58	-15,597.14	-15,416.29	-15,359.35	-5,360.22	-15,905.25	-15,752.92	-15,597.14	-5,511.93
Density (kg/m^3)	1,532.5	1,791.5	25.5	863.3	965.9	940.9	929.3	38.4	999.4	991.3	965.9	37.6
V-L Molecular Weight	24.842	90.073	19.612	18.140	18.015	18.017	18.016	20.415	18.019	18.032	18.015	21.188
V-L Flowrate (lb_{mol}/hr)	65	0	63,532	7,610	1,937	1,200	26,258	41,897	3,542	1,669	3,926	43,709
V-L Flowrate (lb/hr)	1,603	28	1,245,994	138,055	34,897	21,617	473,063	855,318	63,827	30,099	70,728	926,109
Solids Flowrate (lb/hr)	0	0	0	0	0	0	0	0	0	0	0	0
Temperature (°F)	61	59	420	396	191	231	249	84	59	85	191	99
Pressure (psia)	913.1	18.2	747.2	772.5	19.4	67.7	65.0	680.2	14.7	35.0	19.4	657.3
Steam Table Enthalpy (Btu/lb)[A]	-145.1	-3,528.3	472.5	366.0	158.8	192.2	209.2	14.7	27.0	46.4	158.8	18.2
AspenPlus Enthalpy (Btu/lb)[B]	-5,874.4	-3,665.6	-3,246.7	-6,449.5	-6,705.6	-6,627.8	-6,603.3	-2,304.5	-6,838.0	-6,772.5	-6,705.6	-2,369.7
Density (lb/ft^3)	95.670	111.841	1.591	53.893	60.299	58.740	58.013	2.396	62.391	61.884	60.299	2.345

[A]Steam table reference conditions are 32.02°F & 0.089 psia

[B]Aspen thermodynamic reference state is the component's constituent elements in an ideal gas state at 25°C and 1 atm

Exhibit 3-90. Case B5A stream table, GEP IGCC without capture (continued)

	25	26	27	28	29	30	31	32	33	34	35	36
V-L Mole Fraction												
Ar	0.0095	0.0000	0.0035	0.0000	0.0000	0.0008	0.0095	0.0095	0.0092	0.0089	0.0000	0.0089
CH_4	0.0013	0.0000	0.0000	0.0000	0.0000	0.0001	0.0013	0.0013	0.0000	0.0000	0.0000	0.0000
CO	0.4084	0.0002	0.0017	0.0000	0.0000	0.0312	0.4084	0.4084	0.0000	0.0000	0.0000	0.0000
CO_2	0.1587	0.6244	0.7385	0.0000	0.0000	0.1862	0.1587	0.1587	0.0003	0.0813	0.0000	0.0782
COS	0.0000	0.0002	0.0000	0.0000	0.0000	0.0000	0.0000	0.0000	0.0000	0.0000	0.0000	0.0000
H_2	0.3915	0.0000	0.0315	0.0000	0.0000	0.0392	0.3915	0.3915	0.0000	0.0000	0.0000	0.0000
H_2O	0.0006	0.0127	0.0020	0.0000	1.0000	0.6194	0.0006	0.0006	0.0099	0.0643	1.0000	0.0630
HCl	0.0000	0.0000	0.0000	0.0000	0.0000	0.0000	0.0000	0.0000	0.0000	0.0000	0.0000	0.0000
H_2S	0.0000	0.1754	0.0032	0.0000	0.0000	0.0231	0.0000	0.0000	0.0000	0.0000	0.0000	0.0000
N_2	0.0300	0.1854	0.2196	0.0000	0.0000	0.0005	0.0300	0.0300	0.7732	0.7336	0.0000	0.7423
NH_3	0.0000	0.0002	0.0000	0.0000	0.0000	0.0994	0.0000	0.0000	0.0000	0.0000	0.0000	0.0000
O_2	0.0000	0.0015	0.0000	0.0000	0.0000	0.0000	0.0000	0.0000	0.2074	0.1119	0.0000	0.1077
SO_2	0.0000	0.0000	0.0000	0.0000	0.0000	0.0000	0.0000	0.0000	0.0000	0.0000	0.0000	0.0000
NaCl	0.0000	0.0000	0.0000	0.0000	0.0000	0.0000	0.0000	0.0000	0.0000	0.0000	0.0000	0.0000
NaOH	0.0000	0.0000	0.0000	0.0000	0.0000	0.0000	0.0000	0.0000	0.0000	0.0000	0.0000	0.0000
Total	1.0000	1.0000	1.0000	0.0000	1.0000	1.0000	1.0000	1.0000	1.0000	1.0000	1.0000	1.0000
V-L Flowrate (kg_{mol}/hr)	19,289	940	822	0	230	100	19,289	19,289	110,253	135,347	36,165	140,839
V-L Flowrate (kg/hr)	394,754	36,593	32,110	0	4,144	2,281	394,754	394,754	3,181,556	3,955,244	651,521	4,108,187
Solids Flowrate (kg/hr)	0	0	0	5,281	0	0	0	0	0	0	0	0
Temperature (°C)	45	45	38	182	50	195	241	207	15	597	566	126
Pressure (MPa, abs)	4.49	4.49	4.53	0.29	0.27	0.45	4.31	3.17	0.10	0.10	12.51	0.10
Steam Table Enthalpy (kJ/kg)[A]	55.89	5.19	0.71	---	112.50	1,517.11	364.92	311.96	30.23	750.36	3,516.60	227.99
AspenPlus Enthalpy (kJ/kg)[B]	-5,251.15	-6,513.58	-7,484.51	145.99	-15,856.93	-9,881.76	-4,942.12	-4,995.07	-97.58	-1,000.75	-12,463.69	-1,471.40
Density (kg/m^3)	34.9	80.3	80.6	5,270.5	968.6	2.7	20.4	16.1	1.2	0.4	34.8	0.9
V-L Molecular Weight	20.465	38.948	39.051	---	18.016	22.837	20.465	20.465	28.857	29.223	18.015	29.169
V-L Flowrate (lb_{mol}/hr)	42,525	2,071	1,813	0	507	220	42,525	42,525	243,065	298,389	79,730	310,498
V-L Flowrate (lb/hr)	870,283	80,674	70,791	0	9,136	5,029	870,283	870,283	7,014,130	8,719,820	1,436,358	9,057,003
Solids Flowrate (lb/hr)	0	0	0	11,642	0	0	0	0	0	0	0	0
Temperature (°F)	112	112	100	360	122	384	465	404	59	1,106	1,051	260
Pressure (psia)	651.1	651.1	657.3	41.7	39.5	65.0	625.3	460.0	14.7	15.1	1,814.7	14.8
Steam Table Enthalpy (Btu/lb)[A]	24.0	2.2	0.3	---	48.4	652.2	156.9	134.1	13.0	322.6	1,511.9	98.0
AspenPlus Enthalpy (Btu/lb)[B]	-2,257.6	-2,800.3	-3,217.8	62.8	-6,817.3	-4,248.4	-2,124.7	-2,147.5	-42.0	-430.2	-5,358.4	-632.6
Density (lb/ft^3)	2.176	5.016	5.031	329.024	60.469	0.166	1.272	1.006	0.076	0.026	2.173	0.056

[A]Steam table reference conditions are 32.02°F & 0.089 psia

[B]Aspen thermodynamic reference state is the component's constituent elements in an ideal gas state at 25°C and 1 atm

3.4.4.3 Raw Gas Cooling and Particulate Removal

The product gas from the gasifier is cooled from 1,316°C (2,400°F) to 677°C (1,250°F) in the radiant SGC (stream 10), and the molten slag solidifies in the process. The solids collect in the water sump at the bottom of the gasifier and are removed periodically using a lock hopper system (stream 9). The waste heat from this cooling is used to generate HP steam at 12.8 MPa (1,852 psia) for use in the steam cycle.

The syngas exiting the SGC is directed downwards by a dip tube into a water sump. Most of the entrained solids are separated from the syngas at the bottom of the dip tube as the syngas goes upwards through the water. The syngas exits the quench chamber saturated at a temperature of 232°C (450°F).

The slag handling system removes solids from the gasification process equipment. These solids consist of a small amount of unconverted carbon and essentially all the ash contained in the feed coal. These solids are in the form of glass, which fully encapsulates any metals. Solids collected in the water sump below the radiant SGC are removed by gravity and forced circulation of water from the lock hopper circulating pump. The fine solids not removed from the bottom of the quench water sump remain entrained in the water circulating through the quench chamber. In order to limit the amount of solids recycled to the quench chamber, a continuous blowdown stream is removed from the bottom of the syngas quench. The blowdown is sent to the vacuum flash drum in the black water flash section. The circulating quench water is pumped by circulating pumps to the quench gasifier. Carbon conversion in the gasifier is assumed to be 98 percent, including the fines recycle stream.

The syngas scrubber removes additional PM further downstream (covered in Section 3.4.4.4).

3.4.4.4 Syngas Scrubber

The ejector-type venturi scrubber is common to all cases and was covered in Section 3.1.12.1.1. The raw syngas exits the quench at 232°C (450°F) (stream 12) and enters the scrubber for removal of HCl and remaining PM. The treated syngas leaves the scrubber saturated at a temperature of 202°C (396°F).

Effluent from the scrubber is recycled to maintain a concentration of chloride in the blowdown (stream 16) of 5,000 ppmw. The recycled effluent is mixed with ZLD condensate (stream 17) and cooled to 58°C (137°F), by preheating syngas prior to the CT, before being cooled further to 21°C (70°F) with cooling water and injected into the scrubber. The rate of ZLD condensate addition is controlled to maintain the HCl removal rate at 96 percent. A 50 wt% solution of NaOH (stream 13) is added at a rate of 727 kg/hr (1,603 lb/hr) to the scrubber to maintain pH and form the HSS NaCl.

The blowdown from the syngas scrubber is sent to the process water treatment system for chloride removal and recycle.

3.4.4.5 COS Hydrolysis

The COS hydrolysis unit is common to all non-CO_2 capture cases and was covered in Section 3.1.5.1. Following the syngas scrubber, the gas is reheated to 216°C (421°F) and fed to the COS hydrolysis reactor where 95 percent of the COS is hydrolyzed with steam over a catalyst bed to H_2S and CO_2. Before the raw syngas can be treated in the AGR process, it must be cooled and treated for NH_3.

3.4.4.6 Low Temperature Heat Recovery

The raw syngas from the COS unit is cooled through a series of four shell and tube HXs (covered in Section 3.1.12.1.2). The first stage cools the syngas from 216°C (420°F) to 162°C (323°F) by raising 0.4 MPa (65 psia) process steam. The second stage cools the syngas to 134°C (274°F) by heating the slurry and quench FW, preheating the syngas prior to the CT, and preheating the FW to the HRSG. The third stage cools the syngas to 59°C (138°F) by preheating FW to the HRSG and the fourth stage cools the syngas to 29°C (85°F) with cooling water. During cooling, part of the water vapor condenses, along with significant amounts of NH_3, and is combined with the effluent of the NH_3 wash.

3.4.4.7 Sour Water Stripper and Ammonia Wash

The primary SWS removes NH_3, H_2S, and other dissolved gases from the remaining water from the process water drum (stream 18), as was covered in Section 3.1.12.1.3. Process water flows from the drum to the SWS, which consists of a packed column with a steam-heated reboiler. Sour gas is stripped from the liquid and sent to the SRU. The remaining water is combined with raw water makeup (stream 21) and cooled to 21°C (70°F) with cooling water prior to being used as feed to the NH_3 wash.

The cooled syngas gas from the LTHR is sent to the NH_3 wash (covered in Section 3.1.12.1.4) where it flows upward against a counter-current spray of water from the SWS. The rate of raw water makeup addition to the NH_3 wash is controlled to achieve a concentration of NH_3 in the treated gas (stream 20) of 10 ppm. The effluent from the NH_3 wash contains high concentrations of NH_3 and is combined with the effluent from the LTHR system before being flashed and sent to the process water drum (stream 19). The vapor product of the flash is sent to the SRU.

3.4.4.8 Process Water Treatment

The process water treatment system—which consists of a vacuum flash, brine concentrator, and crystallizer—is common to all cases and was covered in Section 3.1.12.2. The blowdown (stream 16) from the syngas scrubber is first flashed to 0.5 MPa (70 psia) with the effluent subsequently vacuum flashed to 0.05 MPa (7.5 psia). The vapor products from both the LP and vacuum flash stages are first cooled to 72°C (162°F), by preheating syngas prior to the CT, before being cooled further to 29°C (85°F) using cooling water. The cooled streams are sent to an overhead flash to 0.2 MPa (35 psia) with the sour gas compressed to 0.4 MPa (65 psia) and sent to the SRU for incineration. The effluent from the overhead flash and condensate from the sour gas compressor are collected and sent to the process water drum for distribution (stream 22).

The effluent from the vacuum flash is sent to the brine concentrator, which evaporates sufficient water to produce an effluent containing approximately 250,000 TDS. The vapor product from the brine concentrator is compressed to 0.14 MPa (20 psia) and cooled to provide heat to the brine concentrator for evaporation. The vapor product is condensed in a HX, which provides preheat to the brine concentrator feed.

The effluent from the brine concentrator then enters the steam-driven crystallizer, where 3,063 kg/hr (6,753 lb/hr) of 0.45 MPa (65 psia) steam is utilized to evaporate sufficient water to produce a super-saturated solution in the effluent. A portion of the effluent is extracted and sent to a centrifuge to separate solids. The centrifuge effluent is returned to the crystallizer.

The vapor product from the brine concentrator is condensed with cooling water and combined with the condensate from the brine concentrator before either being recycled to the syngas scrubber (stream 17) or sent to the process water drum (stream 23) for distribution.

3.4.4.9 Mercury Removal and AGR

The cooled syngas (stream 20) passes through a series of two carbon beds to remove approximately 97 percent of the Hg (covered in Section 3.1.4).

Cool, particulate-free syngas (stream 24) enters the Selexol absorber unit at approximately 4.5 MPa (657 psia) and 37°C (99°F). In this absorber, H_2S is preferentially removed from the fuel gas stream along with smaller amounts of CO_2, COS, and other gases, such as H_2.

The rich solution leaving the bottom of the absorber is heated against the lean solvent returning from the regenerator before entering the H_2S concentrator. A portion of the non-sulfur bearing absorbed gases is driven from the solvent in the H_2S concentrator using N_2 from the ASU as the stripping medium. The temperature of the H_2S concentrator overhead stream is reduced prior to entering the reabsorber where a second stage of H_2S absorption occurs. The rich solvent from the reabsorber is combined with the rich solvent from the absorber and sent to the stripper where it is regenerated through the indirect application of thermal energy via condensation of LP steam in a reboiler. The stripper acid gas stream (stream 26), consisting of 18 vol% H_2S and 62 vol% CO_2 (with the balance mostly N_2), is then sent to the Claus unit.

3.4.4.10 Claus Unit

Acid gas (stream 26) from the Selexol unit is preheated to 219°C (427°F). A portion of the acid gas, along with all of the sour gas (stream 30) and some O_2 from the ASU (stream 2), is fed to the SRU (a Claus bypass type). In the furnace, molten sulfur is produced by catalytically oxidizing approximately one third of the H_2S in the feed to SO_2 at a furnace temperature of 1,316°C (2,400°F), which must be maintained in order to thermally decompose all of the NH_3 present in the sour gas stream. The remaining H_2S is then reacted with SO_2 to produce sulfur and water. Following the thermal stage and condensation of sulfur, three reheaters and three sulfur converters are used to obtain a per-pass H_2S conversion of 99.1 percent. The Claus plant tail gas is hydrogenated and recycled back to the AGR (stream 27).

The total elemental sulfur production from the SRU (stream 28) is approximately 127 tonnes/day (140 tpd).

The waste heat from the Claus unit is used to satisfy all Claus process preheating and reheating requirements, as well as to provide some medium-pressure (1.7 MPa [250 psia]) steam to the ASU.

3.4.4.11 Power Block

The clean syngas exiting the Selexol absorber (stream 25) is reheated (stream 31) to 241°C (465°F) and expanded (stream 32) to 3.2 MPa (460 psia), which produces 6 MWe, before being diluted with LP N_2 from the ASU (stream 6). The diluted syngas enters the state-of-the-art 2008 F-class CT burner. The CT compressor provides combustion air (stream 33) to the burner. The exhaust gas exits the CT at 597°C (1,106°F) (stream 34) and enters the HRSG where additional heat is recovered until the flue gas exits the HRSG at 132°C (270°F) and is discharged through the plant stack. The steam raised in the HRSG is used to power an advanced, commercially available steam turbine using a 12.4 MPa/566°C/566°C (1,800 psig/1,051°F/1,051°F) steam cycle.

3.4.4.12 Air Separation Unit

The ASU is designed to produce a nominal output of 4,137 tonnes/day (4,559 tpd) of 95 mol% O_2 for use in the gasifier (stream 4) and SRU (stream 2). The plant is designed with two production trains. The air compressor is powered by an electric motor. Approximately 9,365 tonnes/day (10,323 tpd) of N_2 is also recovered, compressed, and used as dilution in the CT combustor and AGR.

3.4.5 Case B5A – Performance Results

The plant produces a net output of 634 MW at a net plant efficiency of 39.9 percent (HHV basis). GEP has reported a net plant efficiency of 38.5 percent for their reference plant, and they also presented a range of efficiencies of 38.5–40 percent depending on fuel type. [21], [103] Typically the higher efficiencies result from fuel blends that include petroleum coke.

Overall performance for the plant is summarized in Exhibit 3-91. Exhibit 3-92 provides a detailed breakdown of the auxiliary power requirements. The ASU accounts for approximately 77 percent of the auxiliary load between the MAC, N_2 compressor, O_2 compressor, and ASU auxiliaries. The cooling water system, including the circulating water pumps and the cooling tower fan, accounts for approximately 5 percent of the auxiliary load, and the BFW pumps account for an additional 3 percent. All other systems together constitute the remaining 15 percent of the auxiliary load.

Exhibit 3-91. Case B5A plant performance summary

Performance Summary	
Combustion Turbine Power, MWe	464
Sweet Gas Expander Power, MWe	6
Steam Turbine Power, MWe	295
Total Gross Power, MWe	**765**
Air Separation Unit Main Air Compressor, kWe	68,850
Air Separation Unit Booster Compressor, kWe	5,420
N_2 Compressors, kWe	25,640
CO_2 Compression, kWe	0
Acid Gas Removal, kWe	2,950
Balance of Plant, kWe	28,240
Total Auxiliaries, MWe	**131**
Net Power, MWe	**634**
HHV Net Plant Efficiency, %	39.9%
HHV Net Plant Heat Rate, kJ/kWh (Btu/kWh)	9,025 (8,554)
HHV Cold Gas Efficiency, %	78.9%
HHV Combustion Turbine Efficiency, %	37.9%
LHV Net Plant Efficiency, %	41.4%
LHV Net Plant Heat Rate, kJ/kWh (Btu/kWh)	8,705 (8,250)
LHV Cold Gas Efficiency, %	75.6%
LHV Combustion Turbine Efficiency, %	41.0%
Steam Turbine Cycle Efficiency, %	43.4%
Steam Turbine Heat Rate, kJ/kWh (Btu/kWh)	8,287 (7,855)
Condenser Duty, GJ/hr (MMBtu/hr)	1,654 (1,568)
AGR Cooling Duty, GJ/hr (MMBtu/hr)	172 (163)
As-Received Coal Feed, kg/hr (lb/hr)	210,799 (464,732)
HHV Thermal Input, kWt	1,588,902
LHV Thermal Input, kWt	1,532,516
Raw Water Withdrawal, $(m^3/min)/MW_{net}$ (gpm/MW_{net})	0.029 (7.6)
Raw Water Consumption, $(m^3/min)/MW_{net}$ (gpm/MW_{net})	0.022 (5.9)
O_2:As-Received Coal	0.760

Exhibit 3-92. Case B5A plant power summary

Power Summary	
Combustion Turbine Power, MWe	464
Sweet Gas Expander Power, MWe	6
Steam Turbine Power, MWe	295
Total Gross Power, MWe	**765**
Auxiliary Load Summary	
Acid Gas Removal, kWe	2,950
Air Separation Unit Auxiliaries, kWe	1,000
Air Separation Unit Main Air Compressor, kWe	68,850
Air Separation Unit Booster Compressor, kWe	5,420
Ammonia Wash Pumps, kWe	70
Circulating Water Pumps, kWe	4,460
Claus Plant TG Recycle Compressor, kWe	2,210
Claus Plant/TGTU Auxiliaries, kWe	250
CO_2 Compression, kWe	0
Coal Dryer Air Compressor, kWe	0
Coal Handling, kWe	460
Coal Milling, kWe	2,170
Combustion Turbine Auxiliaries, kWe	1,000
Condensate Pumps, kWe	250
Cooling Tower Fans, kWe	2,310
Feedwater Pumps, kWe	4,010
Gasifier Water Pump, kWe	0
Ground Water Pumps, kWe	430
Miscellaneous Balance of Plant[A], kWe	3,000
N_2 Compressors, kWe	25,640
N_2 Humidification Pump, kWe	0
O_2 Pump, kWe	460
Quench Water Pump, kWe	400
Shift Steam Pump, kWe	0
Slag Handling, kWe	1,110
Slag Reclaim Water Recycle Pump, kWe	0
Slurry Water Pump, kWe	190

Power Summary	
Auxiliary Load Summary	
Sour Gas Compressors, kWe	90
Sour Water Recycle Pumps, kWe	10
Steam Turbine Auxiliaries, kWe	200
Syngas Recycle Compressor, kWe	0
Syngas Scrubber Pumps, kWe	130
Process Water Treatment Auxiliaries, kWe	1,280
Transformer Losses, kWe	2,750
Total Auxiliaries, MWe	**131**
Net Power, MWe	**634**

[A]Includes plant control systems, lighting, HVAC, and miscellaneous low voltage loads

3.4.5.1 Environmental Performance

The environmental targets for emissions of Hg, HCl, NOx, SO_2, and PM were presented in Section 2.4. A summary of the plant air emissions for Case B5A is presented in Exhibit 3-93.

Exhibit 3-93. Case B5A air emissions

	kg/GJ (lb/MMBtu)	Tonne/year (ton/year)[A]	kg/MWh (lb/MWh)[B]
SO_2	0.001 (0.002)	37 (40)	0.007 (0.015)
NOx	0.023 (0.054)	922 (1,017)	0.172 (0.379)
Particulate	0.003 (0.007)	122 (135)	0.023 (0.050)
Hg	1.82E-7 (4.23E-7)	0.007 (0.008)	1.36E-6 (3.00E-6)
HCl	0.000 (0.000)	0.00 (0.00)	0.000 (0.000)
CO_2	85 (197)	3,395,061 (3,742,415)	633 (1,396)
CO_2[C]	-	-	764 (1,685)

[A]Calculations based on an 80 percent capacity factor
[B]Emissions based on gross power except where otherwise noted
[C]CO_2 emissions based on net power instead of gross power

The low level of SO_2 emissions is achieved by capturing the sulfur in the gas by the Selexol AGR process. The AGR process removes over 99 percent of the sulfur compounds in the fuel gas down to a level of less than 30 ppmv. This results in a concentration in the flue gas of less than 4 ppmv. The H_2S-rich regeneration gas from the AGR system is fed to a Claus plant, producing elemental sulfur. The Claus plant tail gas is hydrogenated to convert all sulfur species to H_2S and then recycled back to the Selexol process, thereby eliminating the need for a TGTU.

NOx emissions are limited by N_2 dilution of the syngas to 15 ppmvd (as NO at 15 percent O_2). NH_3 in the syngas is removed with process condensate prior to the low-temperature AGR process and ultimately destroyed in the Claus plant burner. This helps lower NOx levels as well.

Particulate discharge to the atmosphere is limited to extremely low values by the use of the syngas quench in addition to the syngas scrubber and the gas washing effect of the AGR absorber. The particulate emissions represent filterable particulate only.

Approximately 97 percent of the mercury is captured from the syngas by dual activated carbon beds.

CO_2 emissions represent the uncontrolled discharge from the process.

The carbon balance for the plant is shown in Exhibit 3-94. The carbon input to the plant consists of carbon in the air in addition to carbon in the coal. Carbon in the air is not neglected here since the Aspen model accounts for air components throughout. Carbon leaves the plant as unburned carbon in the slag and as CO_2 in the stack gas (includes the ASU vent gas).

Exhibit 3-94. Case B5A carbon balance

Carbon In		Carbon Out	
	kg/hr (lb/hr)		kg/hr (lb/hr)
Coal	134,373 (296,242)	Stack Gas	132,216 (291,486)
Air (CO_2)	530 (1,169)	CO_2 Product	–
		Slag	2,687 (5,925)
Total	**134,903 (297,411)**	**Total**	**134,903 (297,411)**

Exhibit 3-95 shows the sulfur balances for the plant. Sulfur input comes solely from the sulfur in the coal. Sulfur output includes the sulfur recovered in the Claus plant and sulfur emitted in the stack gas. Sulfur in the slag is considered to be negligible.

Exhibit 3-95. Case B5A sulfur balance

Sulfur In		Sulfur Out	
	kg/hr (lb/hr)		kg/hr (lb/hr)
Coal	5,283 (11,648)	Stack Gas	3 (6)
		CO_2 Product	–
		Elemental Sulfur	5,281 (11,642)
Total	**5,283 (11,648)**	**Total**	**5,283 (11,648)**

Exhibit 3-96 shows the overall water balance for the plant. The water balance was explained in cases B1A (Shell) and B4A (E-Gas™), but is also presented here for completeness

Water demand represents the total amount of water required for a particular process. Some water is recovered within the process, primarily as syngas condensate, and is re-used as internal

recycle. The difference between demand and recycle is raw water withdrawal. Raw water withdrawal is defined as the water removed from the ground or diverted from a surface-water source for use in the plant. For this report, it was assumed to be provided 50 percent by a POTW and 50 percent from groundwater. Raw water withdrawal can be represented by the water metered from a raw water source and used in the plant processes for all purposes, such as cooling tower makeup, BFW makeup, quench system makeup, and slag handling makeup. The difference between water withdrawal and process water discharge is defined as water consumption and can be represented by the portion of the raw water withdrawn that is evaporated, transpired, incorporated into products, or otherwise not returned to the water source from which it was withdrawn. Water consumption represents the net impact of the plant process on the water source balance.

Exhibit 3-96. Case B5A water balance

Water Use	Water Demand	Internal Recycle	Raw Water Withdrawal	Process Water Discharge	Raw Water Consumption
	m^3/min (gpm)	m^3/min (gpm)	m^3/min (gpm)	m^3/min (gpm)	m^3/min (gpm)
Slag Handling	0.50 (132)	0.50 (132)	–	–	–
Slurry Water	1.45 (382)	1.45 (382)	–	–	–
Gasifier Water	–	–	–	–	–
Quench	2.79 (738)	2.47 (652)	0.32 (86)	–	0.32 (86)
HCl Scrubber	2.60 (686)	2.60 (686)	–	–	–
NH_3 Scrubber	0.64 (170)	0.16 (43)	0.48 (128)	–	0.48 (128)
Gasifier Steam	–	–	–	–	–
Condenser Makeup	**0.22 (57)**	**–**	**0.22 (57)**	**–**	**0.22 (57)**
BFW Makeup	0.22 (57)	–	0.22 (57)	–	0.22 (57)
Gasifier Steam	–	–	–	–	–
Shift Steam	–	–	–	–	–
N_2 Humidification	–	–	–	–	–
Cooling Tower	**17.38 (4,591)**	**0.24 (64)**	**17.14 (4,528)**	**3.91 (1,033)**	**13.23 (3,495)**
BFW Blowdown	–	0.22 (57)	-0.22 (-57)	–	-0.22 (-57)
ASU Knockout	–	0.02 (6)	-0.02 (-6)	–	-0.02 (-6)
Total	**25.58 (6,757)**	**7.41 (1,958)**	**18.17 (4,799)**	**3.91 (1,033)**	**14.26 (3,766)**

An overall plant energy balance is provided in tabular form in Exhibit 3-97. The power out is the combined CT, steam turbine, and sweet gas expander power prior to generator losses. The power at the generator terminals (shown in Exhibit 3-91) is calculated by multiplying the power out by a combined generator efficiency of 98.5 percent.

Exhibit 3-97. Case B5A overall energy balance (0°C [32°F] reference)

	HHV	Sensible + Latent	Power	Total
Heat In, MMBtu/hr (GJ/hr)				
Coal	5,720 (5,422)	4.8 (4.5)	–	5,725 (5,426)
Air	–	117.8 (111.7)	–	117.8 (111.7)
Raw Water Makeup	–	68.3 (64.7)	–	68.3 (64.7)
Auxiliary Power	–	–	472.0 (447.3)	472.0 (447.3)
TOTAL	**5,720 (5,422)**	**190.9 (181.0)**	**472.0 (447.3)**	**6,383 (6,050)**
Heat Out, MMBtu/hr (GJ/hr)				
Misc. Process Steam	–	4.8 (4.6)	–	4.8 (4.6)
Slag	88.1 (83.5)	36.1 (34.2)	–	124.2 (117.7)
Stack Gas	–	937 (888)	–	937 (888)
Sulfur	48.9 (46.4)	0.6 (0.6)	–	49.6 (47.0)
Motor Losses and Design Allowances	–	–	54.6 (51.8)	54.6 (51.8)
Cooling Tower Load[A]	–	2,270 (2,151)	–	2,270 (2,151)
CO_2 Product Stream	–	–	–	–
Blowdown Streams	–	36.9 (34.9)	–	36.9 (34.9)
Ambient Losses[B]	–	142.7 (135.2)	–	142.7 (135.2)
Power	–	–	2,754 (2,610)	2,754 (2,610)
TOTAL	**137.0 (129.9)**	**3,427 (3,249)**	**2,808 (2,662)**	**6,373 (6,040)**
Unaccounted Energy[C]	–	–	–	10.3 (9.7)

[A]Includes condenser, AGR, and miscellaneous cooling loads
[B]Ambient losses include all losses to the environment through radiation, convection, etc. Sources of these losses include the combustor, reheater, superheater, and transformers
[C]By difference

3.4.5.2 Energy and Mass Balance Diagrams

Energy and mass balance diagrams are shown for the following subsystems in Exhibit 3-98 through Exhibit 3-100:

- Coal gasification and ASU
- Syngas cleanup, sulfur recovery, and tail gas recycle
- Combined cycle power generation, steam, and FW

This page intentionally left blank

Exhibit 3-98. Case B5A coal gasification and ASU energy and mass balance

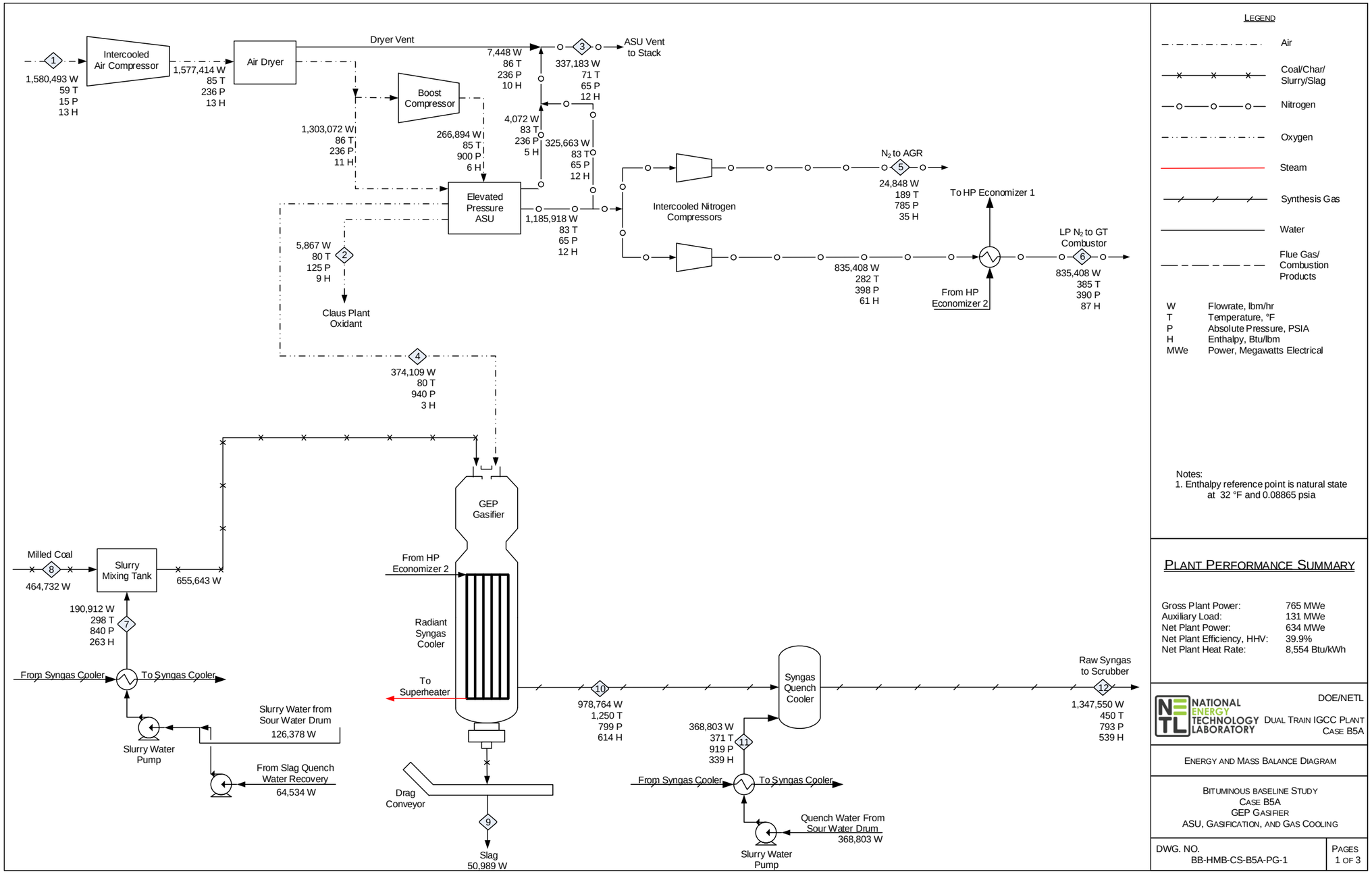

Exhibit 3-99. Case B5A syngas cleanup energy and mass balance

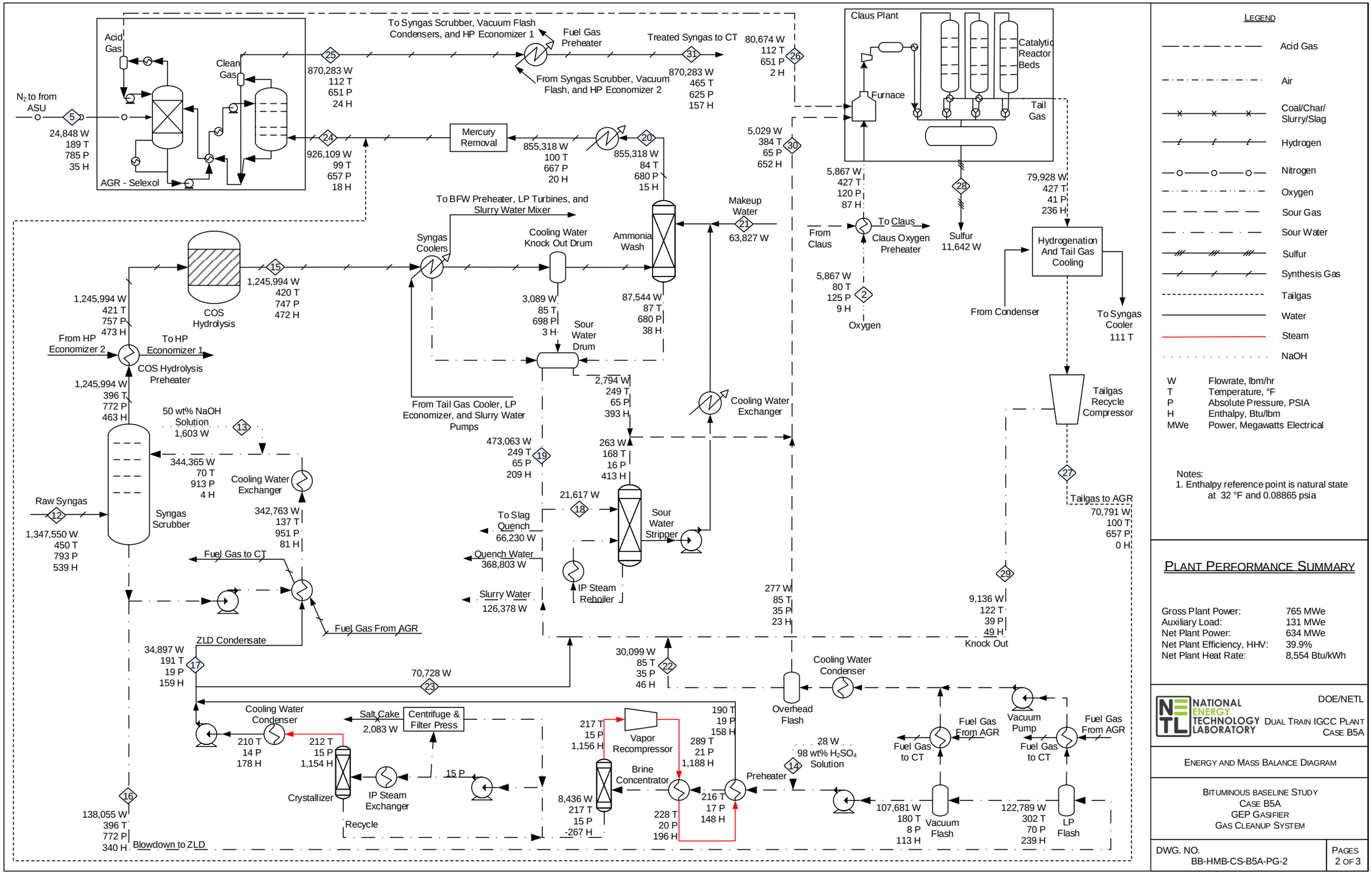

Exhibit 3-100. Case B5A combined cycle power generation energy and mass balance

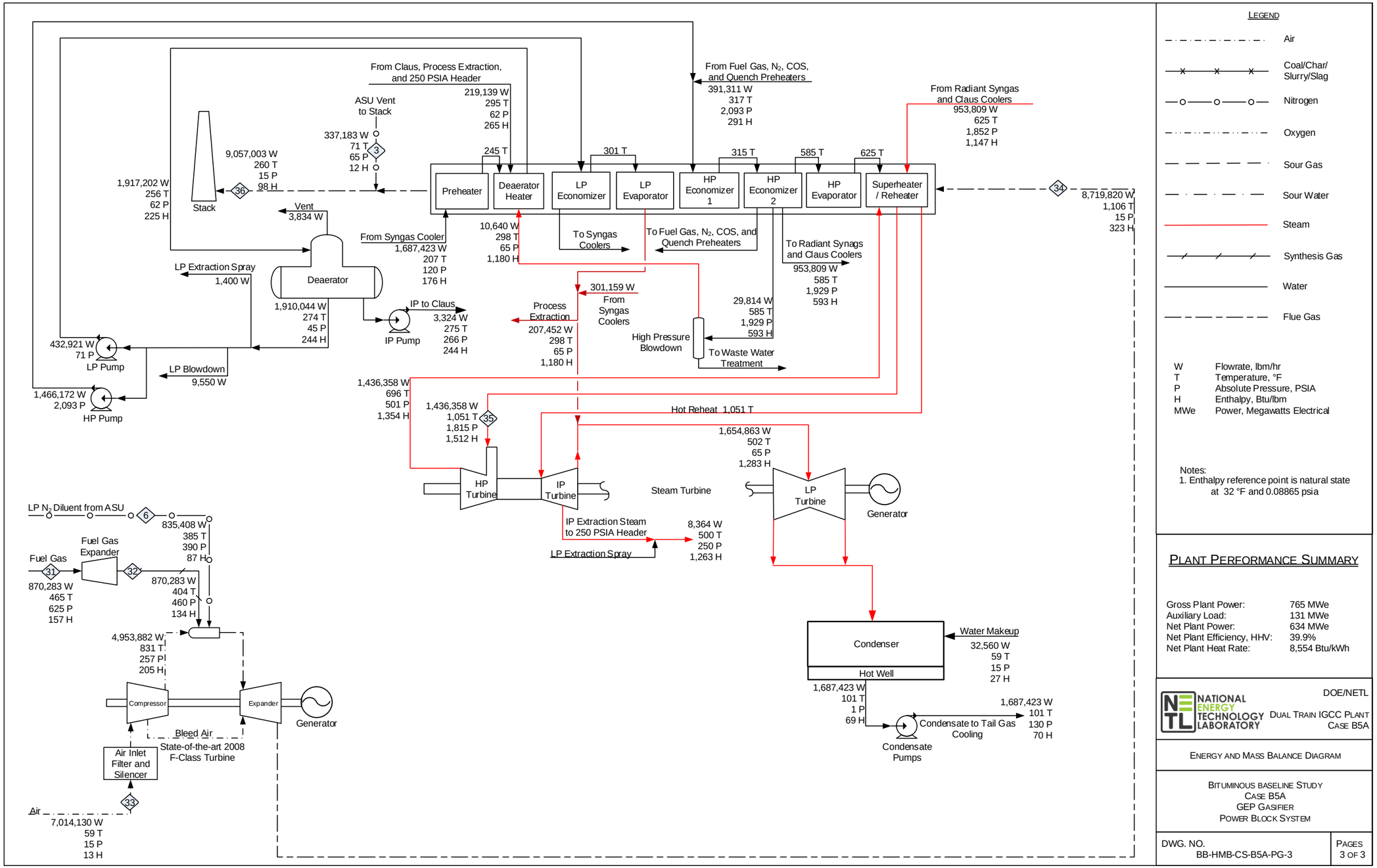

This page intentionally left blank

3.4.6 Case B5A – Major Equipment List

Major equipment items for the GEP gasifier with no CO_2 capture are shown in the following tables. In general, the design conditions include a 10 percent design allowance for flows and heat duties and a 21 percent design allowance for heads on pumps and fans.

Case B5A – Account 1: Coal Handling

Equipment No.	Description	Type	Design Condition	Operating Qty.	Spares
1	Bottom Trestle Dumper and Receiving Hoppers	N/A	181 tonne (200 ton)	2	0
2	Feeder	Belt	570 tonne/hr (630 tph)	2	0
3	Conveyor No. 1	Belt	1,130 tonne/hr (1,250 tph)	1	0
4	Conveyor No. 2	Belt	1,130 tonne/hr (1,250 tph)	1	0
5	Stacker/Reclaimer	Traveling, linear	1,130 tonne/hr (1,250 tph)	1	0
6	Reclaim Hopper	N/A	40 tonne (50 ton)	2	1
7	Feeder	Vibratory	170 tonne/hr (190 tph)	2	1
8	Conveyor No. 3	Belt w/ tripper	350 tonne/hr (380 tph)	1	0
9	Coal Surge Bin w/ Vent Filter	Dual outlet	170 tonne (190 ton)	2	0
10	Crusher	Impactor reduction	8 cm x 0 - 3 cm x 0 (3" x 0 - 1-1/4" x 0)	2	0
11	Conveyor No. 4	Belt w/tripper	350 tonne/hr (380 tph)	1	0
12	Conveyor No. 5	Belt w/ tripper	350 tonne/hr (380 tph)	1	0
13	Coal Silo w/ Vent Filter and Slide Gates	Field erected	770 tonne (850 ton)	3	0

Case B5A – Account 2: Coal Preparation and Feed

Equipment No.	Description	Type	Design Condition	Operating Qty.	Spares
1	Feeder	Vibratory	80 tonne/hr (90 tph)	3	0
2	Conveyor No. 6	Belt w/tripper	230 tonne/hr (260 tph)	1	0
3	Rod Mill Feed Hopper	Dual Outlet	460 tonne (510 ton)	1	0
4	Weigh Feeder	Belt	120 tonne/hr (130 tph)	2	0
5	Rod Mill	Rotary	120 tonne/hr (130 tph)	2	0
6	Slurry Water Storage Tank with Agitator	Field erected	286,180 liters (75,600 gal)	2	0
7	Slurry Water Pumps	Centrifugal	790 lpm (210 gpm)	2	1
8	Trommel Screen	Coarse	160 tonne/hr (180 tph)	2	0
9	Rod Mill Discharge Tank with Agitator	Field erected	374,370 liters (98,900 gal)	2	0
10	Rod Mill Product Pumps	Centrifugal	3,100 lpm (800 gpm)	2	2
11	Slurry Storage Tank with Agitator	Field erected	1,123,100 liters (296,700 gal)	2	0
12	Slurry Recycle Pumps	Centrifugal	6,200 lpm (1,600 gpm)	2	2
13	Slurry Product Pumps	Positive displacement	3,100 lpm (800 gpm)	2	2

Case B5A – Account 3: Feedwater and Miscellaneous Balance of Plant Systems

Equipment No.	Description	Type	Design Condition	Operating Qty.	Spares
1	Demineralized Water Storage Tank	Vertical, cylindrical, outdoor	975,000 liters (258,000 gal)	2	0
2	Condensate Pumps	Vertical canned	7,060 lpm @ 90 m H_2O (1,870 gpm @ 300 ft H_2O)	2	1
3	Deaerator (integral w/ HRSG)	Horizontal spray type	478,000 kg/hr (1,054,000 lb/hr)	2	0
4	Intermediate Pressure Feedwater Pump	Horizontal centrifugal, single stage	1,870 lpm @ 20 m H_2O (490 gpm @ 70 ft H_2O)	2	1
5	High Pressure Feedwater Pump No. 1	Barrel type, multi-stage, centrifugal	HP water: 6,340 lpm @ 1,700 m H_2O (1,680 gpm @ 5,700 ft H_2O)	2	1
6	High Pressure Feedwater Pump No. 2	Barrel type, multi-stage, centrifugal	IP water: 1,690 lpm @ 210 m H_2O (450 gpm @ 670 ft H_2O)	2	1
7	Auxiliary Boiler	Shop fabricated, water tube	18,000 kg/hr, 2.8 MPa, 343°C (40,000 lb/hr, 400 psig, 650°F)	1	0
8	Service Air Compressors	Flooded Screw	28 m^3/min @ 0.7 MPa (1,000 scfm @ 100 psig)	2	1
9	Instrument Air Dryers	Duplex, regenerative	28 m^3/min (1,000 scfm)	2	1
10	Closed Cycle Cooling Heat Exchangers	Plate and frame	244 GJ/hr (231 MMBtu/hr) each	2	0
11	Closed Cycle Cooling Water Pumps	Horizontal centrifugal	87,400 lpm @ 20 m H_2O (23,100 gpm @ 70 ft H_2O)	2	1
12	Engine-Driven Fire Pump	Vertical turbine, diesel engine	3,785 lpm @ 110 m H_2O (1,000 gpm @ 350 ft H_2O)	1	1
13	Fire Service Booster Pump	Two-stage horizontal centrifugal	2,650 lpm @ 80 m H_2O (700 gpm @ 250 ft H_2O)	1	1
14	Municipal Water Pumps	Stainless steel, single suction	2,950 lpm @ 20 m H_2O (780 gpm @ 60 ft H_2O)	2	1
15	Ground Water Pumps	Stainless steel, single suction	2,950 lpm @ 270 m H_2O (780 gpm @ 880 ft H_2O)	2	1
16	Filtered Water Pumps	Stainless steel, single suction	430 lpm @ 50 m H_2O (110 gpm @ 160 ft H_2O)	2	1
17	Filtered Water Tank	Vertical, cylindrical	207,000 liter (55,000 gal)	2	0
18	Makeup Water Demineralizer	Anion, cation, and mixed bed	170 lpm (40 gpm)	2	0
19	Liquid Waste Treatment System	N/A	10 years, 24-hour storm	1	0
20	Process Water Treatment	Vacuum flash, brine concentrator, and crystallizer	Vacuum Flash - Inlet: 34,000 kg/hr (76,000 lb/hr) Outlet: 6,410 ppmw Cl- Brine Concentrator Inlet - 27,000 kg/hr (59,000 lb/hr) Crystallizer Inlet - 2,000 kg/hr (5,000 lb/hr)	2	0

Case B5A – Account 4: Gasifier, ASU, and Accessories

Equipment No.	Description	Type	Design Condition	Operating Qty.	Spares
1	Gasifier	Pressurized slurry-feed, entrained bed	2,800 tonne/day, 5.6 MPa (3,100 tpd, 815 psia)	2	0
2	Synthesis Gas Cooler	Vertical downflow radiant heat exchanger	244,000 kg/hr (538,000 lb/hr)	2	0

Equipment No.	Description	Type	Design Condition	Operating Qty.	Spares
		with outlet quench chamber			
3	Synthesis Gas Cyclone	High efficiency	N/A	2	0
4	HCl Scrubber	Ejector Venturi	336,000 kg/hr (741,000 lb/hr)	2	0
5	Ammonia Wash	Counter-flow spray tower	214,000 kg/hr (472,000 lb/hr) @ 4.8 MPa (698 psia)	2	0
6	Primary Sour Water Stripper	Counter-flow with external reboiler	5,000 kg/hr (12,000 lb/hr)	2	0
7	Secondary Sour Water Stripper	Counter-flow with external reboiler	N/A	2	0
8	Low Temperature Heat Recovery Coolers	Shell and tube with condensate drain	311,000 kg/hr (685,000 lb/hr)	6	0
9	Low Temperature Heat Recovery Knockout Drum	Vertical with mist eliminator	215,000 kg/hr, 59°C, 4.8 MPa (473,000 lb/hr, 138°F, 703 psia)	2	0
10	Saturation Water Economizers	Shell and tube	N/A	4	0
11	HP Nitrogen Gas Saturator	Direct Injection	N/A	2	0
12	LP Nitrogen Gas Saturator	Direct Injection	208,000 kg/hr, 196°C, 2.7 MPa (459,000 lb/hr, 385°F, 390 psia)	2	0
13	Saturator Water Pump	Centrifugal	N/A	2	2
14	Saturated Nitrogen Reheaters	Shell and tube	N/A	4	0
15	Synthesis Gas Reheaters	Shell and tube	Reheater 1: 207,000 kg/hr (456,000 lb/hr) Reheater 2: 10,000 kg/hr (23,000 lb/hr) Reheater 3: N/A Reheater 4: N/A Reheater 5: 217,000 kg/hr (479,000 lb/hr) Reheater 6: 217,000 kg/hr (479,000 lb/hr)	2	0
16	Flare Stack	Self-supporting, carbon steel, stainless steel top, pilot ignition	311,000 kg/hr (685,000 lb/hr) syngas	2	0
17	ASU Main Air Compressor	Centrifugal, multi-stage	5,000 m^3/min @ 1.6 MPa (191,000 scfm @ 236 psia)	2	0
18	Cold Box	Vendor design	2,300 tonne/day (2,500 tpd) of 95% purity O_2	2	0
19	Gasifier O_2 Pump	Centrifugal, multi-stage	1,000 m^3/min (40,000 scfm) Suction - 1.0 MPa (130 psia) Discharge - 6.5 MPa (940 psia)	2	0
20	AGR Nitrogen Boost Compressor	Centrifugal, multi-stage	100 m^3/min (3,000 scfm) Suction - 0.4 MPa (70 psia) Discharge - N/A MPa (N/A psia)	2	0
21	High Pressure Nitrogen Diluent Compressor	Centrifugal, multi-stage	N/A	2	0
22	Low Pressure Nitrogen Diluent Compressor	Centrifugal, single-stage	2,940 m^3/min (104,000 scfm) Suction - 0.4 MPa (70 psia) Discharge - 2.7 MPa (400 psia)	2	0

Equipment No.	Description	Type	Design Condition	Operating Qty.	Spares
23	Gasifier Nitrogen Boost Compressor	Centrifugal, single-stage	N/A	2	0

Case B5A – Account 5: Syngas Cleanup

Equipment No.	Description	Type	Design Condition	Operating Qty.	Spares
1	Mercury Adsorber 1	Sulfated carbon bed	213,000 kg/hr (470,000 lb/hr) 29°C (84°F) 4.7 MPa (680 psia)	2	0
2	Mercury Adsorber 2	Sulfated carbon bed	213,000 kg/hr (470,000 lb/hr) 38°C (100°F) 4.6 MPa (662 psia)	2	0
3	Sulfur Plant	Claus type	139 tonne/day (154 tpd)	1	0
4	COS Hydrolysis Reactor	Fixed bed, catalytic	311,000 kg/hr (685,000 lb/hr) 216°C (420°F) 5.2 MPa (760 psia)	2	0
5	COS Hydrolysis Heat Exchanger	Shell and Tube	7 GJ/hr (6 MMBtu/hr)	2	0
6	Acid Gas Removal Plant	Selexol	231,000 kg/hr (509,000 lb/hr) 37°C (99°F) 4.5 MPa (657 psia)	2	0
7	Hydrogenation Reactor	Fixed bed, catalytic	40,000 kg/hr (88,000 lb/hr) 219°C (427°F) 0.3 MPa (40.8425733 psia)	1	0
8	Tail Gas Recycle Compressor	Centrifugal	35,000 kg/hr (78,000 lb/hr) each	1	0
9	Candle Filter	Pressurized filter with pulse-jet cleaning	N/A	2	0

Case B5A – Account 6: Combustion Turbine and Accessories

Equipment No.	Description	Type	Design Condition	Operating Qty.	Spares
1	Combustion Turbine	State-of-the-art 2008 F-Class	232 MW	2	0
2	Combustion Turbine Generator	TEWAC	260 MVA @ 0.9 p.f., 24 kV, 60 Hz, 3-phase	2	0

Case B5A – Account 7: HRSG, Ductwork, and Stack

Equipment No.	Description	Type	Design Condition	Operating Qty.	Spares
1	Stack	CS plate, type 409SS liner	76 m (250 ft) high x 8.6 m (28 ft) diameter	1	0
2	Heat Recovery Steam Generator	Drum, multi-pressure with economizer section and integral deaerator	Main steam - 358,337 kg/hr, 12.4 MPa/566°C (789,997 lb/hr, 1,800 psig/1,051°F) Reheat steam - 358,337 kg/hr, 3.3 MPa/566°C (789,997 lb/hr, 477 psig/1,051°F)	2	0

Case B5A – Account 8: Steam Turbine and Accessories

Equipment No.	Description	Type	Design Condition	Operating Qty.	Spares
1	Steam Turbine	Commercially available advanced steam turbine	311 MW 12.4 MPa/566°C/566°C (1,800 psig/ 1,051°F/1,051°F)	1	0
2	Steam Turbine Generator	Hydrogen cooled, static excitation	350 MVA @ 0.9 p.f., 24 kV, 60 Hz, 3-phase	1	0
3	Surface Condenser	Single pass, divided waterbox including vacuum pumps	1,820GJ/hr (1,720 MMBtu/hr), Inlet water temperature 16°C (60°F), Water temperature rise 11°C (20°F)	1	0
4	Steam Bypass	One per HRSG	50% steam flow @ design steam conditions	2	0

Case B5A – Account 9: Cooling Water System

Equipment No.	Description	Type	Design Condition	Operating Qty.	Spares
1	Circulating Water Pumps	Vertical, wet pit	448,000 lpm @ 30 m (118,000 gpm @ 100 ft)	2	1
2	Cooling Tower	Evaporative, mechanical draft, multi-cell	11°C (51.5°F) wet bulb/ 16°C (60°F) CWT/ 27°C (80°F) HWT/ 2,500 GJ/hr (2,370 MMBtu/hr) heat duty	1	0

Case B5A – Account 10: Slag Recovery and Handling

Equipment No.	Description	Type	Design Condition	Operating Qty.	Spares
1	Slag Quench Tank	Water bath	243,000 liters (64,000 gal)	2	0
2	Slag Crusher	Roll	13 tonne/hr (14 tph)	2	0
3	Slag Depressurizer	Lock Hopper	13 tonne/hr (14 tph)	2	0
4	Slag Receiving Tank	Horizontal, weir	146,000 liters (39,000 gal)	2	0
5	Black Water Overflow Tank	Shop fabricated	66,000 liters (17,000 gal)	2	0
6	Slag Conveyor	Drag chain	13 tonne/hr (14 tph)	2	0
7	Slag Separation Screen	Vibrating	13 tonne/hr (14 tph)	2	0
8	Coarse Slag Conveyor	Belt/bucket	13 tonne/hr (14 tph)	2	0
9	Fine Ash Settling Tank	Vertical, gravity	207,000 liters (55,000 gal)	2	0
10	Fine Ash Recycle Pumps	Horizontal centrifugal	50 lpm @ 14 m H_2O (10 gpm @ 46 ft H_2O)	2	2
11	Grey Water Storage Tank	Field erected	66,000 liters (17,000 gal)	2	0
12	Grey Water Pumps	Centrifugal	230 lpm @ 560 m H_2O (60 gpm @ 1,850 ft H_2O)	2	2
13	Slag Storage Bin	Vertical, field erected	900 tonne (1,000 tons)	2	0
14	Unloading Equipment	Telescoping chute	110 tonne/hr (120 tph)	1	0

Case B5A – Account 11: Accessory Electric Plant

Equipment No.	Description	Type	Design Condition	Operating Qty.	Spares
1	CTG Transformer	Oil-filled	24 kV/345 kV, 260 MVA, 3-ph, 60 Hz	2	0
2	STG Transformer	Oil-filled	24 kV/345 kV, 310 MVA, 3-ph, 60 Hz	1	0
3	High Voltage Auxiliary Transformer	Oil-filled	345 kV/13.8 kV, 56 MVA, 3-ph, 60 Hz	2	0
4	Medium Voltage Transformer	Oil-filled	24 kV/4.16 kV, 32 MVA, 3-ph, 60 Hz	1	1
5	Low Voltage Transformer	Dry ventilated	4.16 kV/480 V, 5 MVA, 3-ph, 60 Hz	1	1
6	CTG Isolated Phase Bus Duct and Tap Bus	Aluminum, self-cooled	24 kV, 3-ph, 60 Hz	2	0
7	STG Isolated Phase Bus Duct and Tap Bus	Aluminum, self-cooled	24 kV, 3-ph, 60 Hz	1	0
8	Medium Voltage Switchgear	Metal clad	4.16 kV, 3-ph, 60 Hz	1	1
9	Low Voltage Switchgear	Metal enclosed	480 V, 3-ph, 60 Hz	1	1
10	Emergency Diesel Generator	Sized for emergency shutdown	750 kW, 480 V, 3-ph, 60 Hz	1	0

Case B5A – Account 12: Instrumentation and Control

Equipment No.	Description	Type	Design Condition	Operating Qty.	Spares
1	DCS - Main Control	Monitor/keyboard; Operator printer (laser color); Engineering printer (laser B&W)	Operator stations/printers and engineering stations/printers	1	0
2	DCS - Processor	Microprocessor with redundant input/output	N/A	1	0
3	DCS - Data Highway	Fiber optic	Fully redundant, 25% spare	1	0

3.4.7 Case B5A – Cost Estimating

The cost estimating methodology was described previously in Section 2.7. Exhibit 3-101 shows a detailed breakdown of the capital costs; Exhibit 3-102 shows the owner's costs, TOC, and TASC; Exhibit 3-103 shows the initial and annual O&M costs; and Exhibit 3-107 shows the LCOE breakdown.

The estimated TPC of the GEP gasifier with no CO_2 capture is $3,822/kW. Process contingency represents 4.8 percent of the TPC, and project contingency represents 14.6 percent. The LCOE is $107.9/MWh.

Exhibit 3-101. Case B5A total plant cost details

Case:		B5A	– GEP Radiant IGCC w/o CO_2				Estimate Type:			Conceptual	
Plant Size (MW, net):		634					Cost Base:			Dec 2018	
Item No.	Description	Equipment Cost	Material Cost	Labor		Bare Erected Cost	Eng'g CM H.O.& Fee	Contingencies		Total Plant Cost	
				Direct	Indirect			Process	Project	$/1,000	$/kW
1						Coal Handling					
1.1	Coal Receive & Unload	$967	$0	$466	$0	$1,433	$215	$0	$330	$1,978	$3
1.2	Coal Stackout & Reclaim	$3,162	$0	$756	$0	$3,918	$588	$0	$901	$5,407	$9
1.3	Coal Conveyors & Yard Crush	$30,167	$0	$7,678	$0	$37,844	$5,677	$0	$8,704	$52,225	$82
1.4	Other Coal Handling	$4,698	$0	$1,058	$0	$5,756	$863	$0	$1,324	$7,943	$13
1.9	Coal & Sorbent Handling Foundations	$0	$85	$221	$0	$306	$46	$0	$70	$422	$1
	Subtotal	**$38,994**	**$85**	**$10,179**	**$0**	**$49,258**	**$7,389**	**$0**	**$11,329**	**$67,976**	**$107**
2						Coal Preparation & Feed					
2.1	Coal Crushing & Drying	$2,341	$141	$336	$0	$2,819	$423	$0	$648	$3,890	$6
2.2	Prepared Coal Storage & Feed	$7,191	$1,727	$1,110	$0	$10,028	$1,504	$0	$2,307	$13,839	$22
2.3	Slurry Coal Injection System	$7,051	$0	$3,074	$0	$10,125	$1,519	$0	$2,329	$13,972	$22
2.4	Miscellaneous Coal Preparation & Feed	$710	$519	$1,528	$0	$2,758	$414	$0	$634	$3,806	$6
2.9	Coal & Sorbent Feed Foundation	$0	$1,727	$1,482	$0	$3,210	$481	$0	$738	$4,429	$7
	Subtotal	**$17,293**	**$4,114**	**$7,531**	**$0**	**$28,939**	**$4,341**	**$0**	**$6,656**	**$39,936**	**$63**
3						Feedwater & Miscellaneous BOP Systems					
3.1	Feedwater System	$2,083	$3,571	$1,786	$0	$7,440	$1,116	$0	$1,711	$10,267	$16
3.2	Water Makeup & Pretreating	$4,997	$500	$2,832	$0	$8,328	$1,249	$0	$2,873	$12,451	$20
3.3	Other Feedwater Subsystems	$1,077	$353	$335	$0	$1,765	$265	$0	$406	$2,435	$4
3.4	Service Water Systems	$1,493	$2,851	$9,231	$0	$13,575	$2,036	$0	$4,683	$20,295	$32
3.5	Other Boiler Plant Systems	$279	$102	$254	$0	$635	$95	$0	$146	$876	$1
3.6	Natural Gas Pipeline and Start-Up System	$7,187	$309	$232	$0	$7,728	$1,159	$0	$1,778	$10,665	$17
3.7	Waste Water Treatment Equipment	$7,128	$0	$4,369	$0	$11,498	$1,725	$0	$3,967	$17,189	$27
3.8	Vacuum Flash, Brine Concentrator, & Crystallizer	$25,091	$0	$15,544	$0	$40,636	$6,095	$0	$14,019	$60,751	$96
3.9	Miscellaneous Plant Equipment	$15,305	$2,007	$7,778	$0	$25,090	$3,764	$0	$8,656	$37,510	$59
	Subtotal	**$64,641**	**$9,692**	**$42,361**	**$0**	**$116,694**	**$17,504**	**$0**	**$38,239**	**$172,438**	**$272**
4						Gasifier, ASU, & Accessories					
4.1	Gasifier & Auxiliaries (GEP)	$515,494	$0	$283,918	$0	$799,411	$119,912	$111,918	$154,686	$1,185,927	$1,871
4.2	Syngas Cooler	w/4.1	w/4.1	w/4.1	$0	$0	$0	$0	$0	$0	$0
4.3	Air Separation Unit/Oxidant Compression	$56,736	$0	$21,555	$0	$78,291	$11,744	$0	$13,505	$103,540	$163

Case:	B5A	– GEP Radiant IGCC w/o CO_2						Estimate Type:		Conceptual	
Plant Size (MW, net):	634							Cost Base:		Dec 2018	
Item No.	Description	Equipment Cost	Material Cost	Labor		Bare Erected Cost	Eng'g CM H.O.& Fee	Contingencies		Total Plant Cost	
				Direct	Indirect			Process	Project	$/1,000	$/kW
4.5	Miscellaneous Gasification Equipment	$3,840	$0	$2,115	$0	$5,956	$893	$0	$1,027	$7,876	$12
4.6	Low Temperature Heat Recovery & Flue Gas Saturation	$44,630	$0	$16,956	$0	$61,586	$9,238	$0	$14,165	$84,988	$134
4.7	Flare Stack System	$1,895	$0	$334	$0	$2,230	$334	$0	$385	$2,949	$5
4.8	Black Water & Sour Gas Section	w/4.1	w/4.1	w/4.1	$0	$0	$0	$0	$0	$0	$0
4.15	Major Component Rigging	$214	$0	$118	$0	$331	$50	$0	$57	$438	$1
4.16	Gasification Foundations	$0	$400	$349	$0	$748	$112	$0	$215	$1,076	$2
	Subtotal	**$622,809**	**$400**	**$325,345**	**$0**	**$948,553**	**$142,283**	**$111,918**	**$184,040**	**$1,386,794**	**$2,188**
5						Syngas Cleanup					
5.2	Single Stage Selexol	$4,291	$0	$3,616	$0	$7,907	$1,186	$0	$1,819	$10,911	$17
5.3	Elemental Sulfur Plant	$47,457	$9,252	$60,812	$0	$117,521	$17,628	$0	$27,030	$162,179	$256
5.6	Mercury Removal (Carbon Bed)	$143	$0	$108	$0	$251	$38	$13	$60	$362	$1
5.8	Carbonyl Sulfide (COS) Hydrolysis	$11,550	$0	$14,980	$0	$26,530	$3,980	$0	$6,102	$36,611	$58
5.10	Blowback Gas Systems	$668	$375	$209	$0	$1,252	$188	$0	$216	$1,656	$3
5.11	Fuel Gas Piping	$0	$2,955	$1,933	$0	$4,888	$733	$0	$1,124	$6,746	$11
5.12	Gas Cleanup Foundations	$0	$220	$149	$0	$369	$55	$0	$127	$552	$1
	Subtotal	**$64,108**	**$12,802**	**$81,808**	**$0**	**$158,718**	**$23,808**	**$13**	**$36,478**	**$219,017**	**$346**
6						Combustion Turbine & Accessories					
6.1	Combustion Turbine Generator	$74,944	$0	$5,399	$0	$80,343	$12,051	$4,017	$14,462	$110,873	$175
6.2	Syngas Expander	$8,466	$0	$1,162	$0	$9,628	$1,444	$0	$1,661	$12,734	$20
6.3	Combustion Turbine Accessories	$2,687	$0	$164	$0	$2,851	$428	$0	$492	$3,770	$6
6.4	Compressed Air Piping	$0	$510	$333	$0	$843	$126	$0	$194	$1,163	$2
6.5	Combustion Turbine Foundations	$0	$216	$250	$0	$467	$70	$0	$161	$697	$1
	Subtotal	**$86,098**	**$726**	**$7,308**	**$0**	**$94,131**	**$14,120**	**$4,017**	**$16,969**	**$129,238**	**$204**
7						HRSG, Ductwork, & Stack					
7.1	Heat Recovery Steam Generator	$35,906	$0	$6,954	$0	$42,860	$6,429	$0	$7,393	$56,682	$89
7.2	Heat Recovery Steam Generator Accessories	$12,821	$0	$2,483	$0	$15,304	$2,296	$0	$2,640	$20,239	$32
7.3	Ductwork	$0	$1,094	$767	$0	$1,861	$279	$0	$428	$2,569	$4
7.4	Stack	$9,308	$0	$3,474	$0	$12,782	$1,917	$0	$2,205	$16,905	$27
7.5	Heat Recovery Steam Generator, Ductwork & Stack Foundations	$0	$232	$232	$0	$464	$70	$0	$160	$694	$1
	Subtotal	**$58,035**	**$1,326**	**$13,910**	**$0**	**$73,271**	**$10,991**	**$0**	**$12,826**	**$97,088**	**$153**

Case:	B5A	– GEP Radiant IGCC w/o CO_2					Estimate Type:			Conceptual	
Plant Size (MW, net):	634						Cost Base:			Dec 2018	
Item No.	Description	Equipment Cost	Material Cost	Labor		Bare Erected Cost	Eng'g CM H.O.& Fee	Contingencies		Total Plant Cost	
				Direct	Indirect			Process	Project	$/1,000	$/kW
8	Steam Turbine & Accessories										
8.1	Steam Turbine Generator & Accessories	$39,116	$0	$6,004	$0	$45,120	$6,768	$0	$7,783	$59,672	$94
8.2	Steam Turbine Plant Auxiliaries	$1,899	$0	$4,329	$0	$6,228	$934	$0	$1,074	$8,237	$13
8.3	Condenser & Auxiliaries	$7,525	$0	$4,282	$0	$11,807	$1,771	$0	$2,037	$15,615	$25
8.4	Steam Piping	$7,008	$0	$3,039	$0	$10,048	$1,507	$0	$2,889	$14,443	$23
8.5	Turbine Generator Foundations	$0	$296	$523	$0	$820	$123	$0	$283	$1,225	$2
	Subtotal	**$55,549**	**$296**	**$18,178**	**$0**	**$74,023**	**$11,103**	**$0**	**$14,066**	**$99,192**	**$157**
9	Cooling Water System										
9.1	Cooling Towers	$11,332	$0	$3,443	$0	$14,775	$2,216	$0	$2,549	$19,540	$31
9.2	Circulating Water Pumps	$1,478	$0	$107	$0	$1,585	$238	$0	$273	$2,096	$3
9.3	Circulating Water System Auxiliaries	$10,189	$0	$1,439	$0	$11,628	$1,744	$0	$2,006	$15,378	$24
9.4	Circulating Water Piping	$0	$5,739	$5,197	$0	$10,935	$1,640	$0	$2,515	$15,091	$24
9.5	Make-up Water System	$599	$0	$825	$0	$1,424	$214	$0	$328	$1,965	$3
9.6	Component Cooling Water System	$208	$248	$171	$0	$627	$94	$0	$144	$865	$1
9.7	Circulating Water System Foundations	$0	$474	$843	$0	$1,317	$198	$0	$454	$1,969	$3
	Subtotal	**$23,805**	**$6,461**	**$12,024**	**$0**	**$42,290**	**$6,344**	**$0**	**$8,269**	**$56,903**	**$90**
10	Slag Recovery & Handling										
10.1	Slag Dewatering & Cooling	$2,043	$0	$1,001	$0	$3,044	$457	$0	$525	$4,025	$6
10.2	Gasifier Ash Depressurization	$1,157	$0	$567	$0	$1,724	$259	$0	$297	$2,280	$4
10.3	Cleanup Ash Depressurization	$520	$0	$255	$0	$775	$116	$0	$134	$1,025	$2
10.6	Ash Storage Silos	$1,156	$0	$1,250	$0	$2,406	$361	$0	$415	$3,182	$5
10.7	Ash Transport & Feed Equipment	$446	$0	$104	$0	$550	$82	$0	$95	$727	$1
10.8	Miscellaneous Ash Handling Equipment	$64	$78	$23	$0	$165	$25	$0	$29	$219	$0
10.9	Ash/Spent Sorbent Foundation	$0	$452	$593	$0	$1,045	$157	$0	$360	$1,562	$2
	Subtotal	**$5,386**	**$531**	**$3,792**	**$0**	**$9,708**	**$1,456**	**$0**	**$1,855**	**$13,020**	**$21**
11	Accessory Electric Plant										
11.1	Generator Equipment	$2,812	$0	$2,121	$0	$4,933	$740	$0	$851	$6,524	$10
11.2	Station Service Equipment	$3,637	$0	$312	$0	$3,949	$592	$0	$681	$5,222	$8
11.3	Switchgear & Motor Control	$21,945	$0	$3,807	$0	$25,752	$3,863	$0	$4,442	$34,057	$54
11.4	Conduit & Cable Tray	$0	$97	$280	$0	$377	$57	$0	$108	$542	$1
11.5	Wire & Cable	$0	$1,331	$2,380	$0	$3,711	$557	$0	$1,067	$5,335	$8
11.6	Protective Equipment	$241	$0	$837	$0	$1,078	$162	$0	$186	$1,426	$2
11.7	Standby Equipment	$865	$0	$798	$0	$1,663	$249	$0	$287	$2,199	$3
11.8	Main Power Transformers	$6,567	$0	$134	$0	$6,701	$1,005	$0	$1,156	$8,863	$14

Case:	B5A	– GEP Radiant IGCC w/o CO_2					Estimate Type:			Conceptual	
Plant Size (MW, net):	634						Cost Base:			Dec 2018	
Item No.	Description	Equipment Cost	Material Cost	Labor		Bare Erected Cost	Eng'g CM H.O.& Fee	Contingencies		Total Plant Cost	
				Direct	Indirect			Process	Project	$/1,000	$/kW
11.9	Electrical Foundations	$0	$76	$193	$0	$268	$40	$0	$93	$401	$1
	Subtotal	**$36,066**	**$1,504**	**$10,863**	**$0**	**$48,433**	**$7,265**	**$0**	**$8,871**	**$64,570**	**$102**
12	Instrumentation & Control										
12.1	Integrated Gasification and Combined Cycle Control Equipment	$614	$0	$338	$0	$951	$143	$0	$164	$1,258	$2
12.2	Combustion Turbine Control Equipment	$656	$0	$47	$0	$703	$105	$0	$121	$930	$1
12.3	Steam Turbine Control Equipment	$606	$0	$93	$0	$699	$105	$0	$121	$924	$1
12.4	Other Major Component Control Equipment	$1,172	$0	$799	$0	$1,970	$296	$99	$355	$2,719	$4
12.5	Signal Processing Equipment	$909	$0	$30	$0	$939	$141	$0	$162	$1,241	$2
12.6	Control Boards, Panels & Racks	$264	$0	$172	$0	$435	$65	$22	$104	$627	$1
12.7	Distributed Control System Equipment	$9,539	$0	$312	$0	$9,851	$1,478	$493	$1,773	$13,595	$21
12.8	Instrument Wiring & Tubing	$475	$380	$1,519	$0	$2,373	$356	$119	$712	$3,560	$6
12.9	Other Instrumentation & Controls Equipment	$1,065	$0	$528	$0	$1,592	$239	$80	$287	$2,198	$3
	Subtotal	**$15,298**	**$380**	**$3,837**	**$0**	**$19,515**	**$2,927**	**$811**	**$3,799**	**$27,052**	**$43**
13	Improvements to Site										
13.1	Site Preparation	$0	$417	$9,494	$0	$9,911	$1,487	$0	$3,419	$14,817	$23
13.2	Site Improvements	$0	$1,886	$2,666	$0	$4,552	$683	$0	$1,570	$6,805	$11
13.3	Site Facilities	$2,945	$0	$3,306	$0	$6,250	$938	$0	$2,156	$9,344	$15
	Subtotal	**$2,945**	**$2,303**	**$15,466**	**$0**	**$20,713**	**$3,107**	**$0**	**$7,146**	**$30,966**	**$49**
14	Buildings & Structures										
14.1	Combustion Turbine Area	$0	$314	$177	$0	$491	$74	$0	$85	$649	$1
14.3	Steam Turbine Building	$0	$2,784	$3,964	$0	$6,748	$1,012	$0	$1,164	$8,924	$14
14.4	Administration Building	$0	$886	$642	$0	$1,529	$229	$0	$264	$2,022	$3
14.5	Circulation Water Pumphouse	$0	$142	$75	$0	$217	$33	$0	$37	$287	$0
14.6	Water Treatment Buildings	$0	$333	$325	$0	$658	$99	$0	$113	$870	$1
14.7	Machine Shop	$0	$490	$335	$0	$824	$124	$0	$142	$1,090	$2
14.8	Warehouse	$0	$382	$246	$0	$628	$94	$0	$108	$831	$1
14.9	Other Buildings & Structures	$0	$280	$218	$0	$498	$75	$0	$86	$658	$1
14.10	Waste Treating Building & Structures	$0	$757	$1,445	$0	$2,203	$330	$0	$380	$2,913	$5
	Subtotal	**$0**	**$6,368**	**$7,428**	**$0**	**$13,795**	**$2,069**	**$0**	**$2,380**	**$18,244**	**$29**
	Total	**$1,091,029**	**$46,987**	**$560,028**	**$0**	**$1,698,044**	**$254,707**	**$116,758**	**$352,924**	**$2,422,433**	**$3,822**

Exhibit 3-102. Case B5A owner's costs

Description	$/1,000	$/kW
Pre-Production Costs		
6 Months All Labor	$20,282	$32
1 Month Maintenance Materials	$4,921	$8
1 Month Non-Fuel Consumables	$860	$1
1 Month Waste Disposal	$750	$1
25% of 1 Months Fuel Cost at 100% CF	$2,203	$3
2% of TPC	$48,449	$76
Total	**$77,464**	**$122**
Inventory Capital		
60-day supply of fuel and consumables at 100% CF	$18,947	$30
0.5% of TPC (spare parts)	$12,112	$19
Total	**$31,059**	**$49**
Other Costs		
Initial Cost for Catalyst and Chemicals	$11,824	$19
Land	$900	$1
Other Owner's Costs	$363,365	$573
Financing Costs	$65,406	$103
Total Overnight Costs (TOC)	**$2,972,450**	**$4,690**
TASC Multiplier (IOU, 35 year)	1.154	
Total As-Spent Cost (TASC)	**$3,431,432**	**$5,414**

Exhibit 3-103. Case B5A initial and annual operating and maintenance costs

Case:	B5A	– GEP Radiant IGCC w/o CO_2			Cost Base:	Dec 2018
Plant Size (MW, net):	634	Heat Rate-net (Btu/kWh):		8,554	Capacity Factor (%):	80
Operating & Maintenance Labor						
Operating Labor				**Operating Labor Requirements per Shift**		
Operating Labor Rate (base):		38.50	**$/hour**	Skilled Operator:		2.0
Operating Labor Burden:		30.00	**% of base**	Operator:		10.0
Labor O-H Charge Rate:		25.00	**% of labor**	Foreman:		1.0
				Lab Techs, etc.:		3.0
				Total:		**16.0**
Fixed Operating Costs						
					Annual Cost	
					($)	**($/kW-net)**
Annual Operating Labor:					$7,015,008	$11.068
Maintenance Labor:					$25,435,547	$40.132
Administrative & Support Labor:					$8,112,639	$12.800
Property Taxes and Insurance:					$48,448,661	$76.442
Total:					**$89,011,855**	**$140.442**
Variable Operating Costs						
					($)	**($/MWh-net)**
Maintenance Material:					$47,237,445	$10.63506
Consumables						
	Initial Fill	**Per Day**	**Per Unit**	**Initial Fill**		
Water (gal/1000):	0	3,455	$1.90	$0	$1,916,875	$0.43157
Makeup and Waste Water Treatment Chemicals (ton):	0	10.3	$550.00	$0	$1,652,924	$0.37214
Sulfur-Impregnated Activated Carbon (ton):	51.1	0.070	$12,000.00	$612,994	$245,198	$0.05520
COS Hydrolysis Catalyst (ft^3):	2,170	1.49	$1,300.00	$2,820,669	$564,134	$0.12701
Selexol Solution (gal):	220,807	41.0	$38.00	$8,390,684	$454,782	$0.10239
Sodium Hydroxide (50 wt%, ton):	0	19.2	$600.00	$0	$3,369,391	$0.75859
Sulfuric Acid (98 wt%, ton):	0	0.340	$210.00	$0	$20,844	$0.00469
Claus Catalyst (ft^3):	w/equip.	1.93	$48.00	$0	$27,090	$0.00610
Subtotal:				**$11,824,347**	**$8,251,238**	**$1.85769**
Waste Disposal						
Sulfur-Impregnated Activated Carbon (ton):	0	0.070	$80.00	$0	$1,635	$0.00037
COS Hydrolysis Catalyst (ft^3):	0	1.49	$2.50	$0	$1,085	$0.00024
Selexol Solution (gal):	0	41.0	$0.35	$0	$4,189	$0.00094
Claus Catalyst (ft^3):	0	1.93	$2.50	$0	$1,411	$0.00032
Crystallizer Solids (ton):	0	36.2	$38.00	$0	$401,337	$0.09036
Slag (ton):	0	612	$38.00	$0	$6,789,283	$1.52854
Subtotal:				**$0**	**$7,198,940**	**$1.62077**
By-Products						
Sulfur (tons):	0	140	$0.00	$0	$0	$0.00000
Subtotal:				**$0**	**$0**	**$0.00000**
Variable Operating Costs Total:				**$11,824,347**	**$62,687,623**	**$14.11352**
Fuel Cost						
Illinois Number 6 (ton):	0	5,577	$51.96	$0	$84,609,474	$19.04902
Total:				**$0**	**$84,609,474**	**$19.04902**

Exhibit 3-104. Case B5A LCOE breakdown

Component	Value, $/MWh	Percentage
Capital	54.7	51%
Fixed	20.0	19%
Variable	14.1	13%
Fuel	19.0	18%
Total (Excluding T&S)	**107.9**	**N/A**
CO_2 T&S	0.0	0%
Total (Including T&S)	**107.9**	**N/A**

3.4.8 Case B5B – GEP Radiant IGCC with CO_2 Capture

In this section, the GEP gasification process for Case B5B is described. The plant configuration is nearly identical to that of Case B5A, with the exception that this case is configured to produce electric power with CO_2 capture.

The gross power output is constrained by the capacity of the two CTs, and since the CO_2 capture and compression process increases the auxiliary load on the plant, the net output is significantly reduced relative to Case B5A (556 MW versus 634 MW).

The process descriptions for Case B5B are similar to Case B5A with several notable exceptions to accommodate CO_2 capture. The system descriptions follow the BFD provided in Exhibit 3-105 with the associated stream tables—providing process data for the numbered streams in the BFD—provided in Exhibit 3-106. Rather than repeating the entire process description, only differences from Case B5A are reported here.

3.4.8.1 Coal Preparation and Feed Systems

No differences from Case B5A.

3.4.8.2 Gasifier

No differences from Case B5A.

Exhibit 3-105. Case B5B block flow diagram, GEP IGCC with CO_2 capture

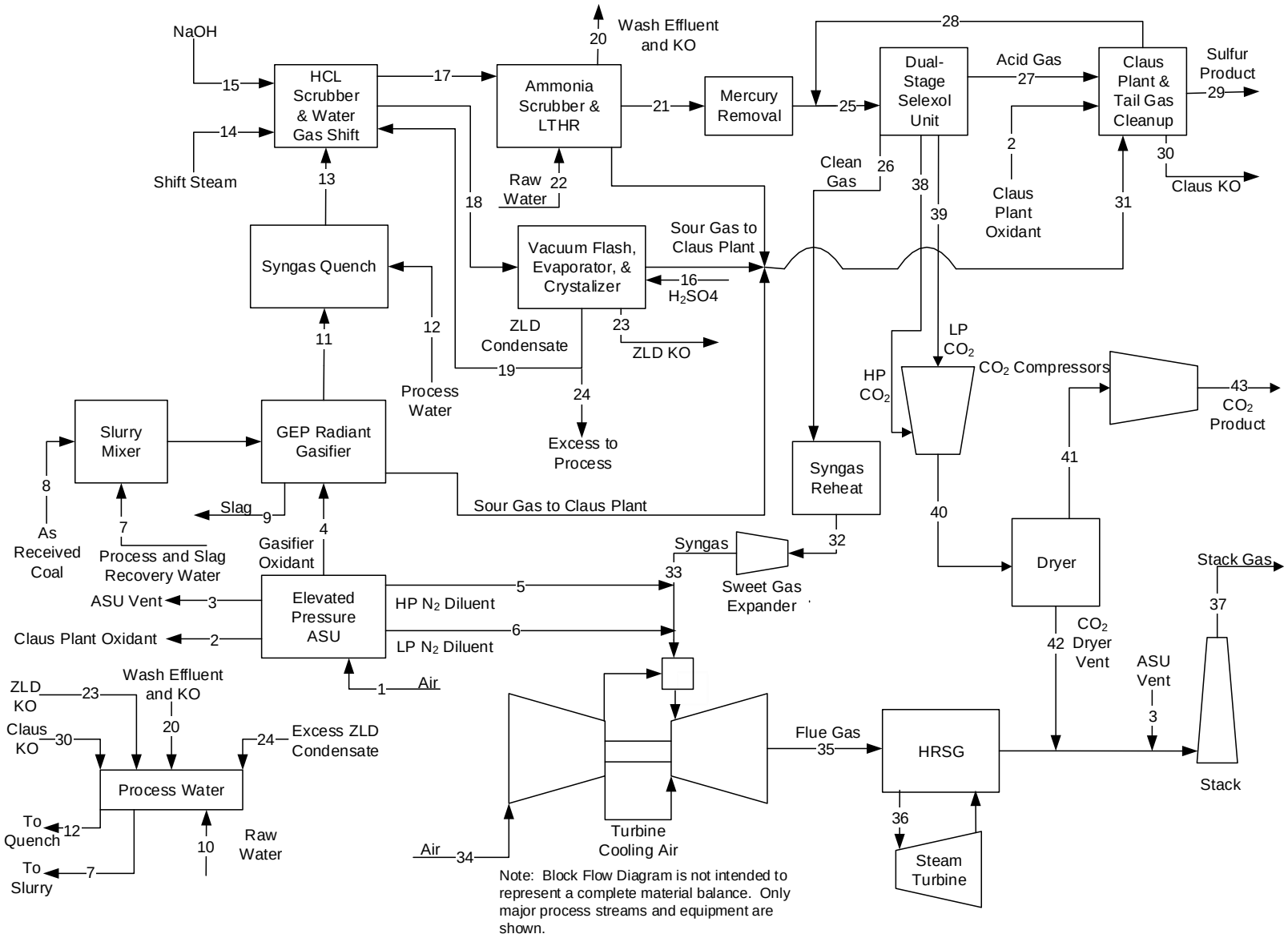

Exhibit 3-106. Case B5B stream table, GEP IGCC with capture

	1	2	3	4	5	6	7	8	9	10	11	12
V-L Mole Fraction												
Ar	0.0092	0.0343	0.0443	0.0343	0.0000	0.0000	0.0000	0.0000	0.0000	0.0000	0.0082	0.0000
CH_4	0.0000	0.0000	0.0000	0.0000	0.0000	0.0000	0.0000	0.0000	0.0000	0.0000	0.0011	0.0000
CO	0.0000	0.0000	0.0000	0.0000	0.0000	0.0000	0.0000	0.0000	0.0000	0.0000	0.3571	0.0000
CO_2	0.0003	0.0000	0.0078	0.0000	0.0000	0.0000	0.0004	0.0000	0.0000	0.0000	0.1381	0.0005
COS	0.0000	0.0000	0.0000	0.0000	0.0000	0.0000	0.0000	0.0000	0.0000	0.0000	0.0002	0.0000
H_2	0.0000	0.0000	0.0000	0.0000	0.0000	0.0000	0.0000	0.0000	0.0000	0.0000	0.3412	0.0000
H_2O	0.0099	0.0000	0.1606	0.0000	0.0000	0.0000	0.9904	0.0000	0.0000	0.9999	0.1363	0.9902
HCl	0.0000	0.0000	0.0000	0.0000	0.0000	0.0000	0.0000	0.0000	0.0000	0.0000	0.0004	0.0000
H_2S	0.0000	0.0000	0.0000	0.0000	0.0000	0.0000	0.0001	0.0000	0.0000	0.0000	0.0073	0.0001
N_2	0.7732	0.0157	0.7846	0.0157	0.9964	0.9964	0.0000	0.0000	0.0000	0.0000	0.0080	0.0000
NH_3	0.0000	0.0000	0.0000	0.0000	0.0000	0.0000	0.0091	0.0000	0.0000	0.0000	0.0021	0.0091
O_2	0.2074	0.9501	0.0028	0.9501	0.0036	0.0036	0.0000	0.0000	0.0000	0.0000	0.0000	0.0000
SO_2	0.0000	0.0000	0.0000	0.0000	0.0000	0.0000	0.0000	0.0000	0.0000	0.0000	0.0000	0.0000
NaCl	0.0000	0.0000	0.0000	0.0000	0.0000	0.0000	0.0000	0.0000	0.0000	0.0001	0.0000	0.0000
NaOH	0.0000	0.0000	0.0000	0.0000	0.0000	0.0000	0.0000	0.0000	0.0000	0.0000	0.0000	0.0000
Total	1.0000	1.0000	1.0000	1.0000	1.0000	1.0000	1.0000	0.0000	0.0000	1.0000	1.0000	1.0000
V-L Flowrate (kg_{mol}/hr)	25,720	69	1,081	5,471	8,786	10,232	4,990	0	0	1,777	22,932	9,650
V-L Flowrate (kg/hr)	742,208	2,229	29,273	176,210	246,260	286,790	89,922	0	0	32,021	461,011	173,917
Solids Flowrate (kg/hr)	0	0	0	0	0	0	0	218,895	24,016	0	0	0
Temperature (°C)	15	27	23	27	196	196	148	15	1,316	15	677	188
Pressure (MPa, abs)	0.10	0.86	0.45	6.48	3.24	2.69	5.79	0.10	5.62	0.10	5.51	6.33
Steam Table Enthalpy (kJ/kg)[A]	30.23	21.53	26.49	6.21	202.25	202.61	607.31	---	---	62.75	1,428.33	785.40
AspenPlus Enthalpy (kJ/kg)[B]	-97.58	-0.97	-1,815.18	-16.30	176.29	176.64	-15,239.17	-2,119.02	-727.24	-15,905.25	-5,242.22	-15,058.15
Density (kg/m^3)	1.2	11.2	5.8	87.9	23.1	19.2	898.7	---	---	999.4	13.8	859.7
V-L Molecular Weight	28.857	32.209	27.072	32.209	28.028	28.028	18.019	---	---	18.019	20.104	18.023
V-L Flowrate (lb_{mol}/hr)	56,703	153	2,384	12,061	19,370	22,559	11,002	0	0	3,918	50,555	21,274
V-L Flowrate (lb/hr)	1,636,288	4,913	64,537	388,477	542,910	632,264	198,245	0	0	70,593	1,016,355	383,422
Solids Flowrate (lb/hr)	0	0	0	0	0	0	0	482,580	52,947	0	0	0
Temperature (°F)	59	80	74	80	385	385	298	59	2,400	59	1,250	371
Pressure (psia)	14.7	125.0	65.0	940.0	470.0	390.0	840.0	14.7	815.0	14.7	798.7	918.7
Steam Table Enthalpy (Btu/lb)[A]	13.0	9.3	11.4	2.7	87.0	87.1	261.1	---	---	27.0	614.1	337.7
AspenPlus Enthalpy (Btu/lb)[B]	-42.0	-0.4	-780.4	-7.0	75.8	75.9	-6,551.7	-911.0	-312.7	-6,838.0	-2,253.7	-6,473.8
Density (lb/ft^3)	0.076	0.700	0.365	5.487	1.439	1.196	56.102	---	---	62.391	0.864	53.671

[A]Steam table reference conditions are 32.02°F & 0.089 psia

[B]Aspen thermodynamic reference state is the component's constituent elements in an ideal gas state at 25°C and 1 atm

Exhibit 3-106. Case B5B stream table, GEP IGCC with capture (continued)

	13	14	15	16	17	18	19	20	21	22	23	24
V-L Mole Fraction												
Ar	0.0058	0.0000	0.0000	0.0000	0.0055	0.0000	0.0000	0.0000	0.0069	0.0000	0.0000	0.0000
CH_4	0.0008	0.0000	0.0000	0.0000	0.0008	0.0000	0.0000	0.0000	0.0010	0.0000	0.0000	0.0000
CO	0.2513	0.0000	0.0000	0.0000	0.0167	0.0001	0.0000	0.0000	0.0210	0.0000	0.0000	0.0000
CO_2	0.0974	0.0000	0.0000	0.0000	0.3139	0.0008	0.0000	0.0007	0.3928	0.0000	0.0008	0.0000
COS	0.0001	0.0000	0.0000	0.0000	0.0000	0.0000	0.0000	0.0000	0.0000	0.0000	0.0000	0.0000
H_2	0.2402	0.0000	0.0000	0.0000	0.4492	0.0002	0.0000	0.0000	0.5644	0.0000	0.0000	0.0000
H_2O	0.3892	1.0000	0.6895	0.1000	0.2000	0.9941	0.9997	0.9866	0.0012	0.9999	0.9911	0.9997
HCl	0.0003	0.0000	0.0000	0.0000	0.0000	0.0000	0.0000	0.0000	0.0000	0.0000	0.0000	0.0000
H_2S	0.0052	0.0000	0.0000	0.0000	0.0050	0.0001	0.0000	0.0001	0.0062	0.0000	0.0002	0.0000
N_2	0.0056	0.0000	0.0000	0.0000	0.0053	0.0000	0.0000	0.0000	0.0067	0.0000	0.0000	0.0000
NH_3	0.0041	0.0000	0.0000	0.0000	0.0037	0.0020	0.0003	0.0125	0.0000	0.0000	0.0079	0.0003
O_2	0.0000	0.0000	0.0000	0.0000	0.0000	0.0000	0.0000	0.0000	0.0000	0.0000	0.0000	0.0000
SO_2	0.0000	0.0000	0.0000	0.0000	0.0000	0.0000	0.0000	0.0000	0.0000	0.0000	0.0000	0.0000
NaCl	0.0000	0.0000	0.0000	0.0000	0.0000	0.0026	0.0000	0.0000	0.0000	0.0001	0.0000	0.0000
NaOH	0.0000	0.0000	0.3105	0.0000	0.0000	0.0001	0.0000	0.0000	0.0000	0.0000	0.0000	0.0000
Total	1.0000	1.0000	1.0000	0.1000	1.0000	1.0000	1.0000	1.0000	1.0000	1.0000	1.0000	1.0000
V-L Flowrate (kg_{mol}/hr)	32,581	4,428	30	0	34,370	3,584	915	10,086	27,347	3,118	786	1,847
V-L Flowrate (kg/hr)	634,905	79,778	755	13	666,900	65,022	16,485	181,793	539,289	56,178	14,174	33,266
Solids Flowrate (kg/hr)	0	0	0	0	0	0	0	0	0	0	0	0
Temperature (°C)	232	288	16	15	225	202	88	89	28	15	29	88
Pressure (MPa, abs)	5.47	5.33	6.30	0.13	4.79	5.33	0.13	0.45	4.36	0.10	0.24	0.13
Steam Table Enthalpy (kJ/kg)[A]	1,252.06	2,932.37	-337.57	-8,206.86	840.10	850.86	369.16	344.46	32.19	62.75	106.51	369.16
AspenPlus Enthalpy (kJ/kg)[B]	-7,931.49	-13,047.92	-13,663.78	-8,526.27	-8,636.20	-14,999.84	-15,596.91	-15,452.29	-7,990.65	-15,905.25	-15,745.25	-15,596.91
Density (kg/m^3)	26.2	24.5	1,532.5	1,791.5	22.6	862.9	965.9	954.2	35.1	999.4	990.8	965.9
V-L Molecular Weight	19.487	18.015	24.842	90.073	19.403	18.140	18.015	18.025	19.720	18.019	18.032	18.015
V-L Flowrate (lb_{mol}/hr)	71,828	9,763	67	0	75,774	7,902	2,017	22,235	60,290	6,874	1,733	4,071
V-L Flowrate (lb/hr)	1,399,727	175,879	1,664	29	1,470,263	143,350	36,342	400,785	1,188,929	123,852	31,249	73,338
Solids Flowrate (lb/hr)	0	0	0	0	0	0	0	0	0	0	0	0
Temperature (°F)	450	550	61	59	437	396	191	192	82	59	85	191
Pressure (psia)	793.1	772.5	913.1	18.2	694.8	772.5	19.4	65.0	632.5	14.7	35.0	19.4
Steam Table Enthalpy (Btu/lb)[A]	538.3	1,260.7	-145.1	-3,528.3	361.2	365.8	158.7	148.1	13.8	27.0	45.8	158.7
AspenPlus Enthalpy (Btu/lb)[B]	-3,409.9	-5,609.6	-5,874.4	-3,665.6	-3,712.9	-6,448.8	-6,705.5	-6,643.3	-3,435.4	-6,838.0	-6,769.2	-6,705.5
Density (lb/ft^3)	1.636	1.530	95.670	111.841	1.413	53.872	60.298	59.566	2.194	62.391	61.856	60.298

[A]Steam table reference conditions are 32.02°F & 0.089 psia

[B]Aspen thermodynamic reference state is the component's constituent elements in an ideal gas state at 25°C and 1 atm

Exhibit 3-106. Case B5B stream table, GEP IGCC with capture (continued)

	25	26	27	28	29	30	31	32	33	34	35	36
V-L Mole Fraction												
Ar	0.0069	0.0112	0.0001	0.0083	0.0000	0.0000	0.0010	0.0112	0.0112	0.0092	0.0088	0.0000
CH_4	0.0009	0.0014	0.0001	0.0000	0.0000	0.0000	0.0001	0.0014	0.0014	0.0000	0.0000	0.0000
CO	0.0208	0.0336	0.0008	0.0056	0.0000	0.0000	0.0103	0.0336	0.0336	0.0000	0.0000	0.0000
CO_2	0.3971	0.0304	0.5121	0.7967	0.0000	0.0000	0.7110	0.0304	0.0304	0.0003	0.0083	0.0000
COS	0.0000	0.0000	0.0010	0.0000	0.0000	0.0000	0.0000	0.0000	0.0000	0.0000	0.0000	0.0000
H_2	0.5602	0.9123	0.0116	0.1726	0.0000	0.0000	0.0726	0.9123	0.9123	0.0000	0.0000	0.0000
H_2O	0.0012	0.0001	0.0160	0.0020	0.0000	1.0000	0.1473	0.0001	0.0001	0.0099	0.1197	1.0000
HCl	0.0000	0.0000	0.0000	0.0000	0.0000	0.0000	0.0000	0.0000	0.0000	0.0000	0.0000	0.0000
H_2S	0.0062	0.0000	0.4576	0.0076	0.0000	0.0000	0.0285	0.0000	0.0000	0.0000	0.0000	0.0000
N_2	0.0067	0.0109	0.0000	0.0072	0.0000	0.0000	0.0006	0.0109	0.0109	0.7732	0.7554	0.0000
NH_3	0.0000	0.0000	0.0006	0.0000	0.0000	0.0000	0.0285	0.0000	0.0000	0.0000	0.0000	0.0000
O_2	0.0000	0.0000	0.0000	0.0000	0.0000	0.0000	0.0000	0.0000	0.0000	0.2074	0.1079	0.0000
SO_2	0.0000	0.0000	0.0000	0.0000	0.0000	0.0000	0.0000	0.0000	0.0000	0.0000	0.0000	0.0000
NaCl	0.0000	0.0000	0.0000	0.0000	0.0000	0.0000	0.0000	0.0000	0.0000	0.0000	0.0000	0.0000
NaOH	0.0000	0.0000	0.0000	0.0000	0.0000	0.0000	0.0000	0.0000	0.0000	0.0000	0.0000	0.0000
Total	1.0000	1.0000	1.0000	1.0000	0.0000	1.0000	1.0000	1.0000	1.0000	1.0000	1.0000	1.0000
V-L Flowrate (kg_{mol}/hr)	27,641	16,882	374	294	0	146	60	16,882	16,882	110,253	138,169	34,077
V-L Flowrate (kg/hr)	549,993	82,706	14,421	10,704	0	2,631	2,171	82,706	82,706	3,181,556	3,797,304	613,905
Solids Flowrate (kg/hr)	0	0	0	0	5,486	0	0	0	0	0	0	0
Temperature (°C)	36	18	27	38	184	49	90	241	219	15	566	535
Pressure (MPa, abs)	4.21	3.96	0.18	4.21	0.12	0.11	0.45	3.81	3.17	0.10	0.10	12.51
Steam Table Enthalpy (kJ/kg)[A]	42.85	108.20	41.01	5.09	---	107.98	271.72	1,453.85	1,320.53	30.23	834.08	3,436.63
AspenPlus Enthalpy (kJ/kg)[B]	-7,992.68	-3,270.09	-5,581.34	-8,669.69	146.92	-15,861.78	-8,809.63	-1,924.43	-2,057.75	-97.58	-560.76	-12,543.66
Density (kg/m^3)	33.4	7.9	2.9	68.7	5,268.0	963.4	5.4	4.3	3.8	1.2	0.4	36.6
V-L Molecular Weight	19.898	4.899	38.543	36.396	---	18.016	35.895	4.899	4.899	28.857	27.483	18.015
V-L Flowrate (lb_{mol}/hr)	60,938	37,218	825	648	0	322	133	37,218	37,218	243,065	304,610	75,127
V-L Flowrate (lb/hr)	1,212,527	182,336	31,793	23,598	0	5,801	4,787	182,336	182,336	7,014,130	8,371,623	1,353,430
Solids Flowrate (lb/hr)	0	0	0	0	12,094	0	0	0	0	0	0	0
Temperature (°F)	97	65	80	100	362	121	194	465	426	59	1,051	996
Pressure (psia)	611.2	574.8	26.7	611.2	17.1	16.2	65.0	552.0	460.0	14.7	15.1	1,814.7
Steam Table Enthalpy (Btu/lb)[A]	18.4	46.5	17.6	2.2	---	46.4	116.8	625.0	567.7	13.0	358.6	1,477.5
AspenPlus Enthalpy (Btu/lb)[B]	-3,436.2	-1,405.9	-2,399.5	-3,727.3	63.2	-6,819.3	-3,787.5	-827.4	-884.7	-42.0	-241.1	-5,392.8
Density (lb/ft^3)	2.084	0.491	0.180	4.288	328.873	60.145	0.338	0.269	0.235	0.076	0.026	2.288

[A]Steam table reference conditions are 32.02°F & 0.089 psia

[B]Aspen thermodynamic reference state is the component's constituent elements in an ideal gas state at 25°C and 1 atm

Exhibit 3-106. Case B5B stream table, GEP IGCC with capture (continued)

	37	38	39	40	41	42	43
V-L Mole Fraction							
Ar	0.0090	0.0001	0.0000	0.0000	0.0000	0.0000	0.0000
CH_4	0.0000	0.0002	0.0001	0.0002	0.0002	0.0000	0.0002
CO	0.0000	0.0009	0.0001	0.0007	0.0007	0.0000	0.0007
CO_2	0.0083	0.9853	0.9985	0.9889	0.9908	0.0500	0.9908
COS	0.0000	0.0000	0.0000	0.0000	0.0000	0.0000	0.0000
H_2	0.0000	0.0103	0.0008	0.0077	0.0077	0.0000	0.0077
H_2O	0.1201	0.0031	0.0005	0.0024	0.0005	0.9500	0.0005
HCl	0.0000	0.0000	0.0000	0.0000	0.0000	0.0000	0.0000
H_2S	0.0000	0.0000	0.0000	0.0000	0.0000	0.0000	0.0000
N_2	0.7555	0.0001	0.0000	0.0000	0.0000	0.0000	0.0000
NH_3	0.0000	0.0000	0.0000	0.0000	0.0000	0.0000	0.0000
O_2	0.1070	0.0000	0.0000	0.0000	0.0000	0.0000	0.0000
SO_2	0.0000	0.0000	0.0000	0.0000	0.0000	0.0000	0.0000
NaCl	0.0000	0.0000	0.0000	0.0000	0.0000	0.0000	0.0000
NaOH	0.0000	0.0000	0.0000	0.0000	0.0000	0.0000	0.0000
Total	1.0000	1.0000	1.0000	1.0000	1.0000	1.0000	1.0000
V-L Flowrate (kg_{mol}/hr)	139,271	7,572	2,814	10,385	10,364	21	10,364
V-L Flowrate (kg/hr)	3,826,982	329,179	123,687	452,866	452,461	404	452,461
Solids Flowrate (kg/hr)	0	0	0	0	0	0	0
Temperature (°C)	129	-3	-11	29	29	29	30
Pressure (MPa, abs)	0.10	0.55	0.12	2.50	2.39	2.50	15.27
Steam Table Enthalpy (kJ/kg)[A]	336.80	-5.70	-9.81	1.28	0.53	138.13	-226.97
AspenPlus Enthalpy (kJ/kg)[B]	-1,062.91	-8,968.75	-8,972.37	-8,961.74	-8,956.76	-15,225.03	-9,184.27
Density (kg/m^3)	0.8	11.1	2.3	49.8	47.2	319.0	838.2
V-L Molecular Weight	27.479	43.474	43.960	43.606	43.655	19.315	43.655
V-L Flowrate (lb_{mol}/hr)	307,040	16,693	6,203	22,896	22,850	46	22,850
V-L Flowrate (lb/hr)	8,437,051	725,715	272,683	998,398	997,507	891	997,507
Solids Flowrate (lb/hr)	0	0	0	0	0	0	0
Temperature (°F)	265	26	12	85	85	85	86
Pressure (psia)	14.8	80.0	16.7	363.0	346.5	363.0	2,214.7
Steam Table Enthalpy (Btu/lb)[A]	144.8	-2.4	-4.2	0.5	0.2	59.4	-97.6
AspenPlus Enthalpy (Btu/lb)[B]	-457.0	-3,855.9	-3,857.4	-3,852.9	-3,850.7	-6,545.6	-3,948.5
Density (lb/ft^3)	0.052	0.696	0.146	3.109	2.948	19.917	52.328

[A]Steam table reference conditions are 32.02°F & 0.089 psia

[B]Aspen thermodynamic reference state is the component's constituent elements in an ideal gas state at 25°C and 1 atm

3.4.8.3 Raw Gas Cooling and Particulate Removal

No differences from Case B5A.

3.4.8.4 Syngas Scrubber

Case B5B differs from Case B5A only in the degree of cooling completed prior to the cooling water HX. In Case B5A, both the process water and scrubber effluent recycle are cooled to 58°C (137°F) by preheating syngas prior to the CT. However, in this case, the recycled effluent is cooled from 203°C (397°F) to 44°C (112°F) by preheating FW to the WGS steam generator, and the ZLD condensate (stream 19) is cooled to 32°C (90°F) by preheating syngas prior to the CT and mixed with the cooled effluent before being cooled further to 21°C (70°F) with cooling water and injected into the scrubber.

3.4.8.5 Water Gas Shift

The WGS process was described in Section 3.1.3. After the scrubber, the syngas is combined with steam (stream 14) to adjust the steam to dry gas ratio prior to the first WGS reactor. The rate of steam injection is controlled to maintain an exit steam to dry gas ratio of approximately 0.25. Two stages total are used to convert 93.0 percent of the CO in the syngas to CO_2. The heat generated from the first reactor is used to produce more steam than is required (26,677 kg/hr [58,813 lb/hr] of 5.3MPa [773 psia] steam is exported for use in the steam cycle) to maintain the desired steam to dry gas ratio while cooling the syngas to 253°C (487°F) prior to entering the second stage. Prior to the syngas being sent to the LTHR system (stream 17), the warm syngas from the second stage of WGS is cooled to 225°C (437°F) by preheating the FW of the WGS steam generator.

The WGS catalyst also serves to hydrolyze COS thus eliminating the need for a separate COS hydrolysis reactor.

3.4.8.6 Low Temperature Heat Recovery

Case B5B only differs from Case B5A in that the second stage of the LTHR system cools the syngas by preheating the FW to the WGS steam generator, in addition to the other uses described for Case B5A.

3.4.8.7 Ammonia Wash

As Case B5B has no SWS; raw water is utilized as the sole source of NH_3 wash water. All other aspects of this section are identical to those described for Case B5A.

3.4.8.8 Process Water Treatment

The process water treatment system is identical to that used in Case B5A, with the exception that the vapor products from both the LP and vacuum flash stages are cooled to 46°C (115°F) prior to the cooling water condensing HX. The lower temperature reached in this case (46°C [115°F] versus 72°C [162°F]) is due to the lower exit temperature of the two-stage Selexol system, compared to the one-stage Selexol system.

3.4.8.9 Mercury Removal and AGR

Mercury removal is the same as in Case B5A.

The AGR process in Case B5B is a two-stage Selexol process (covered in Section 3.1.5) where H_2S is removed in the first stage and CO_2 in the second stage of absorption. The process results in four product streams, the clean syngas (stream 26), two CO_2-rich streams (streams 38 and 39) and an acid gas feed to the Claus plant (stream 27). The acid gas contains 46 vol% H_2S and 51 vol% CO_2 with the balance primarily water and H_2. The raw CO_2 stream from the Selexol process contains over 99 vol% CO_2.

3.4.8.10 Claus Unit

No differences from Case B5A.

3.4.8.11 Power Block

In Case B5B, HP N_2 (stream 5) at 3.2 MPa (470 psia), in addition to the LP N_2 (stream 6) at 2.7 MPa (390 psia), is used as a syngas diluent. The exhaust gas (stream 35) exits the CT at a lower temperature (566°C [1,051°F]) than Case B5A due to the higher moisture content.

3.4.8.12 Air Separation Unit

No differences from Case B5A.

3.4.9 Case B5B – Performance Results

The Case B5B modeling assumptions were presented previously in Section 3.4.2.

The plant produces a net output of 556 MW at a net plant efficiency of 33.7 percent (HHV basis). Overall performance for the entire plant is summarized in Exhibit 3-107.

Exhibit 3-108 provides a detailed breakdown of the auxiliary power requirements. The ASU accounts for nearly 62 percent of the auxiliary load between the MAC, N_2 compressor, O_2 compressor, and ASU auxiliaries. The two-stage Selexol process and CO_2 compression account for an additional 23 percent of the auxiliary power load. The BFW pumps and cooling water system (circulating water pumps and cooling tower fan) compose over 6 percent of the load, with all other systems together constituting the remaining 9 percent of the auxiliary load.

Exhibit 3-107. Case B5B plant performance summary

Performance Summary	
Combustion Turbine Power, MWe	464
Sweet Gas Expander Power, MWe	3
Steam Turbine Power, MWe	274
Total Gross Power, MWe	**741**
Air Separation Unit Main Air Compressor, kWe	71,280
Air Separation Unit Booster Compressor, kWe	5,610
N_2 Compressors, kWe	36,580
CO_2 Compression, kWe	31,670
Acid Gas Removal, kWe	11,550
Balance of Plant, kWe	28,080
Total Auxiliaries, MWe	**185**
Net Power, MWe	**556**
HHV Net Plant Efficiency, %	33.7%
HHV Net Plant Heat Rate, kJ/kWh (Btu/kWh)	10,675 (10,118)
HHV Cold Gas Efficiency, %	79.0%
HHV Combustion Turbine Efficiency, %	36.4%

Performance Summary	
LHV Net Plant Efficiency, %	35.0%
LHV Net Plant Heat Rate, kJ/kWh (Btu/kWh)	10,296 (9,759)
LHV Cold Gas Efficiency, %	75.7%
LHV Combustion Turbine Efficiency, %	42.8%
Steam Turbine Cycle Efficiency, %	43.1%
Steam Turbine Heat Rate, kJ/kWh (Btu/kWh)	8,356 (7,920)
Condenser Duty, GJ/hr (MMBtu/hr)	1,555 (1,474)
AGR Cooling Duty, GJ/hr (MMBtu/hr)	147 (140)
As-Received Coal Feed, kg/hr (lb/hr)	218,895 (482,580)
HHV Thermal Input, kWt	1,649,926
LHV Thermal Input, kWt	1,591,374
Raw Water Withdrawal, $(m^3/min)/MW_{net}$ (gpm/MW_{net})	0.037 (9.9)
Raw Water Consumption, $(m^3/min)/MW_{net}$ (gpm/MW_{net})	0.030 (7.9)
O_2:As-Received Coal	0.760

Exhibit 3-108. Case B5B plant power summary

Power Summary	
Combustion Turbine Power, MWe	464
Sweet Gas Expander Power, MWe	3
Steam Turbine Power, MWe	274
Total Gross Power, MWe	**741**
Auxiliary Load Summary	
Acid Gas Removal, kWe	11,550
Air Separation Unit Auxiliaries, kWe	1,000
Air Separation Unit Main Air Compressor, kWe	71,280
Air Separation Unit Booster Compressor, kWe	5,610
Ammonia Wash Pumps, kWe	90
Circulating Water Pumps, kWe	4,850
Claus Plant TG Recycle Compressor, kWe	1,080
Claus Plant/TGTU Auxiliaries, kWe	250
CO_2 Compression, kWe	31,670
Coal Dryer Air Compressor, kWe	0

Power Summary	
Coal Handling, kWe	470
Coal Milling, kWe	2,250
Combustion Turbine Auxiliaries, kWe	1,000
Condensate Pumps, kWe	270
Cooling Tower Fans, kWe	2,510
Feedwater Pumps, kWe	3,840
Gasifier Water Pump, kWe	0
Ground Water Pumps, kWe	500
Miscellaneous Balance of Plant[A], kWe	3,000
N_2 Compressors, kWe	36,580
N_2 Humidification Pump, kWe	0
O_2 Pump, kWe	480
Quench Water Pump, kWe	400
Shift Steam Pump, kWe	210
Slag Handling, kWe	1,150
Slag Reclaim Water Recycle Pump, kWe	0
Slurry Water Pump, kWe	190
Auxiliary Load Summary	
Sour Gas Compressors, kWe	0
Sour Water Recycle Pumps, kWe	10
Steam Turbine Auxiliaries, kWe	200
Syngas Recycle Compressor, kWe	0
Syngas Scrubber Pumps, kWe	140
Process Water Treatment Auxiliaries, kWe	1,320
Transformer Losses, kWe	2,870
Total Auxiliaries, MWe	**185**
Net Power, MWe	**556**

[A]Includes plant control systems, lighting, HVAC, and miscellaneous low voltage loads

3.4.9.1 Environmental Performance

The environmental targets for emissions of Hg, HCl, NOx, SO_2, and PM were presented in Section 2.42.3. A summary of the plant air emissions for Case B5B is presented in Exhibit 3-109.

Exhibit 3-109. Case B5B air emissions

	kg/GJ (lb/MMBtu)	Tonne/year (ton/year)[A]	kg/MWh (lb/MWh)[B]
SO_2	0.000 (0.000)	0 (0)	0.000 (0.000)
NOx	0.021 (0.048)	858 (945)	0.165 (0.364)
Particulate	0.003 (0.007)	127 (140)	0.024 (0.054)
Hg	1.70E-7 (3.95E-7)	0.007 (0.008)	1.36E-6 (3.00E-6)
HCl	0.000 (0.000)	0.00 (0.00)	0.000 (0.000)
CO_2	9 (20)	355,046 (391,372)	68 (151)
CO_2[C]	-	-	91 (201)

[A]Calculations based on an 80 percent capacity factor
[B]Emissions based on gross power except where otherwise noted
[C]CO_2 emissions based on net power instead of gross power

The low level of SO_2 emissions is achieved by capturing the sulfur in the gas by the two-stage Selexol AGR process. As a result of achieving the 90 percent CO_2 removal target, the sulfur compounds are removed to an extent that exceeds the environmental target in Section 2.4. The clean syngas exiting the AGR process has a sulfur concentration of approximately 5 ppmv. This results in a concentration in the flue gas of less than 1 ppmv. The H_2S-rich regeneration gas from the AGR system is fed to a Claus plant, producing elemental sulfur. The Claus plant tail gas is hydrogenated to convert all sulfur species to H_2S and then recycled back to the Selexol process, thereby eliminating the need for a TGTU.

NOx emissions are limited by N_2 dilution to 15 ppmvd (as NO at 15 percent O_2). NH_3 in the syngas is removed with process condensate prior to the low-temperature AGR process. This helps lower NOx levels as well.

Particulate discharge to the atmosphere is limited to extremely low values by the use of the syngas quench in addition to the syngas scrubber and the gas washing effect of the AGR absorber. The particulate emissions represent filterable particulate only.

Approximately 97 percent of the mercury is captured from the syngas by dual activated carbon beds.

Ninety two percent of the CO_2 from the syngas is captured in the AGR system and compressed for sequestration. Because not all CO is converted to CO_2 in the shift reactors, the overall carbon removal is 90 percent.

The carbon balance for the plant is shown in Exhibit 3-110. The carbon input to the plant consists of carbon in the air in addition to carbon in the coal. Carbon leaves the plant as unburned carbon in the slag and the captured CO_2 product, and as CO_2 in the stack gas (includes the ASU vent gas). The carbon capture efficiency is defined as one minus the amount of carbon in the stack gas relative to the total carbon in less carbon contained in the slag, represented by the following fraction:

$$\left(1-\left(\frac{Carbon\ in\ Stack}{(Total\ Carbon\ In)-(Carbon\ in\ Slag)}\right)\right)*100=\left(1-\left(\frac{30{,}483}{308{,}796-6{,}152}\right)*\right)100=90\%$$

Exhibit 3-110. Case B5B carbon balance

Carbon In		Carbon Out	
	kg/hr (lb/hr)		kg/hr (lb/hr)
Coal	139,534 (307,620)	Stack Gas	13,827 (30,483)
Air (CO_2)	534 (1,176)	CO_2 Product	123,450 (272,161)
		Slag	2,791 (6,152)
Total	**140,067 (308,796)**	**Total**	**140,067 (308,796)**

Exhibit 3-111 shows the sulfur balance for the plant. Sulfur input comes solely from the sulfur in the coal. Sulfur output includes the sulfur recovered in the Claus plant and sulfur in the CO_2 product. Sulfur in the slag is considered to be negligible.

Exhibit 3-111. Case B5B sulfur balance

Sulfur In		Sulfur Out	
	kg/hr (lb/hr)		kg/hr (lb/hr)
Coal	5,486 (12,095)	Stack Gas	–
		CO_2 Product	1 (2)
		Elemental Sulfur	5,486 (12,094)
Total	**5,486 (12,095)**	**Total**	**5,486 (12,095)**

Exhibit 3-112 shows the overall water balance for the plant. The exhibit is presented in an identical manner as for cases B1A through B5A.

Exhibit 3-112. Case B5B water balance

Water Use	Water Demand	Internal Recycle	Raw Water Withdrawal	Process Water Discharge	Raw Water Consumption
	m^3/min (gpm)	m^3/min (gpm)	m^3/min (gpm)	m^3/min (gpm)	m^3/min (gpm)
Slag Handling	0.52 (138)	0.52 (138)	–	–	–
Slurry Water	1.50 (396)	1.50 (396)	–	–	–
Gasifier Water	–	–	–	–	–
Quench	2.90 (767)	1.85 (488)	1.05 (279)	–	1.05 (279)
HCl Scrubber	2.69 (712)	2.69 (712)	–	–	–
NH_3 Scrubber	0.94 (248)	0.00 (0)	0.94 (248)	–	0.94 (248)
Gasifier Steam	–	–	–	–	–
Condenser Makeup	**0.21 (55)**	**–**	**0.21 (55)**	**–**	**0.21 (55)**

Water Use	Water Demand	Internal Recycle	Raw Water Withdrawal	Process Water Discharge	Raw Water Consumption
	m^3/min (gpm)	m^3/min (gpm)	m^3/min (gpm)	m^3/min (gpm)	m^3/min (gpm)
BFW Makeup	0.21 (55)	–	0.21 (55)	–	0.21 (55)
Gasifier Steam	–	–	–	–	–
Shift Steam	–	–	–	–	–
N_2 Humidification	–	–	–	–	–
Cooling Tower	**18.90 (4,992)**	**0.23 (62)**	**18.66 (4,930)**	**4.25 (1,123)**	**14.41 (3,808)**
BFW Blowdown	–	0.21 (55)	-0.21 (-55)	–	-0.21 (-55)
ASU Knockout	–	0.02 (6)	-0.02 (-6)	–	-0.02 (-6)
Total	**27.66 (7,308)**	**6.80 (1,796)**	**20.86 (5,512)**	**4.25 (1,123)**	**16.61 (4,389)**

An overall plant energy balance is presented in tabular form in Exhibit 3-113. The power out is the combined CT, steam turbine, and sweet gas expander power prior to generator losses. The power at the generator terminals (shown in Exhibit 3-107) is calculated by multiplying the power out by a combined generator efficiency of 98.5 percent.

Exhibit 3-113. Case B5B overall energy balance (0°C [32°F] reference)

	HHV	Sensible + Latent	Power	Total
Heat In, MMBtu/hr (GJ/hr)				
Coal	5,940 (5,630)	5.0 (4.7)	–	5,945 (5,634)
Air	–	118.6 (112.4)	–	118.6 (112.4)
Raw Water Makeup	–	78.5 (74.4)	–	78.5 (74.4)
Auxiliary Power	–	–	665.2 (630.5)	665.2 (630.5)
TOTAL	**5,940 (5,630)**	**202.0 (191.5)**	**665.2 (630.5)**	**6,807 (6,452)**
Heat Out, MMBtu/hr (GJ/hr)				
Misc. Process Steam	–	4.8 (4.6)	–	4.8 (4.6)
Slag	91.5 (86.7)	37.5 (35.5)	–	129.0 (122.3)
Stack Gas	–	1,289 (1,222)	–	1,289 (1,222)
Sulfur	50.8 (48.2)	0.6 (0.6)	–	51.5 (48.8)
Motor Losses and Design Allowances	–	–	58.1 (55.1)	58.1 (55.1)
Cooling Tower Load[A]	–	2,467 (2,339)	–	2,467 (2,339)
CO_2 Product Stream	–	-102.7 (-97.3)	–	-102.7 (-97.3)
Blowdown Streams	–	39.1 (37.1)	–	39.1 (37.1)
Ambient Losses[B]	–	144.7 (137.1)	–	144.7 (137.1)

	HHV	Sensible + Latent	Power	Total
Power	–	–	2,668 (2,529)	2,668 (2,529)
TOTAL	**142.3 (134.9)**	**3,880 (3,678)**	**2,726 (2,584)**	**6,749 (6,397)**
Unaccounted Energy[C]	–	57.9 (54.9)	–	57.9 (54.9)

[A]Includes condenser, AGR, and miscellaneous cooling loads
[B]Ambient losses include all losses to the environment through radiation, convection, etc. Sources of these losses include the combustor, reheater, superheater, and transformers
[C]By difference

3.4.9.2 Energy and Mass Balance Diagrams

Energy and mass balance diagrams are shown for the following subsystems in Exhibit 3-114 through Exhibit 3-116:

- Coal gasification and ASU
- Syngas cleanup, sulfur recovery, and tail gas recycle
- Combined cycle power generation, steam, and FW

Exhibit 3-114. Case B5B coal gasification and ASU energy and mass balance

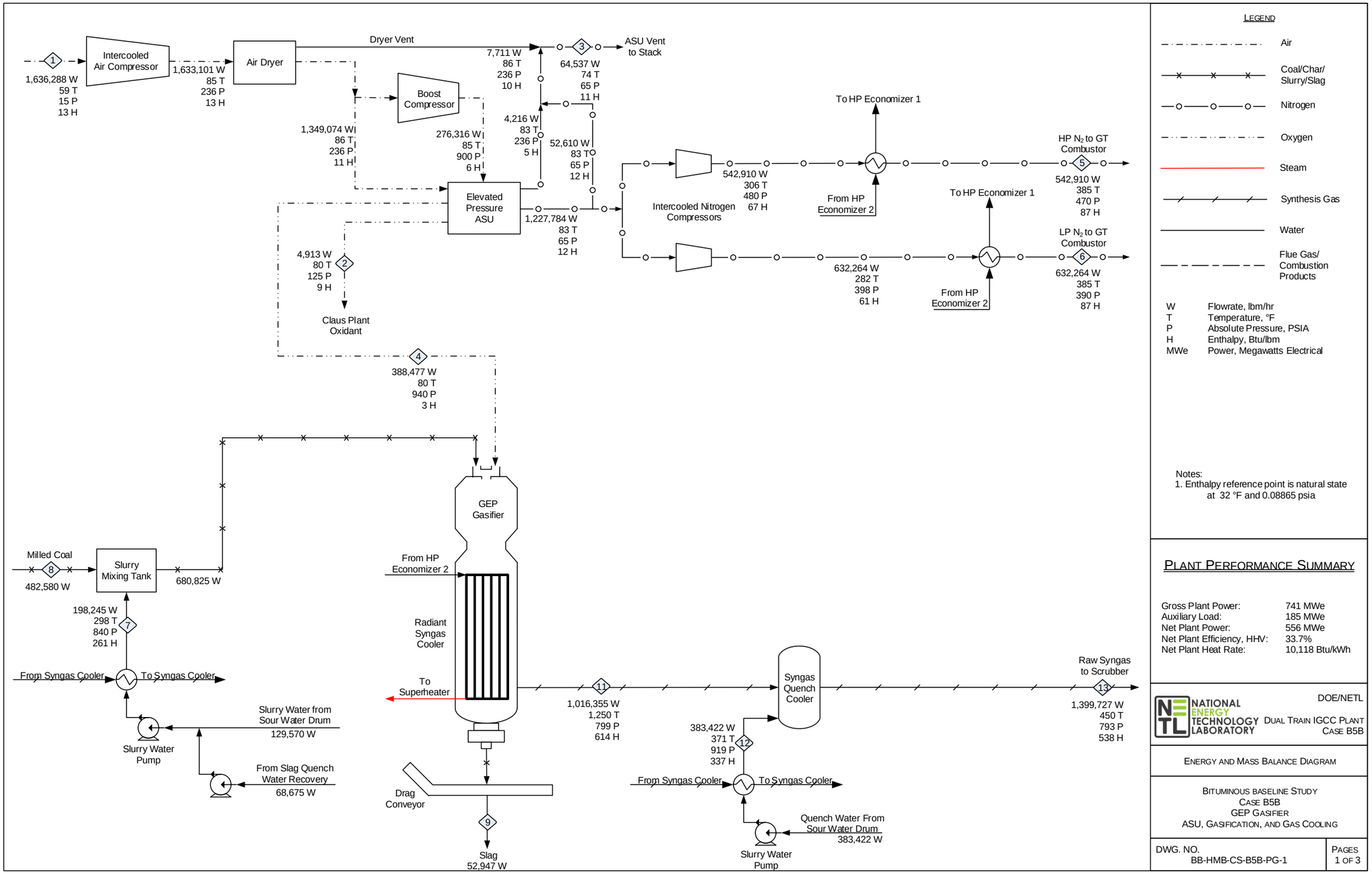

Exhibit 3-115. Case B5B syngas cleanup energy and mass balance

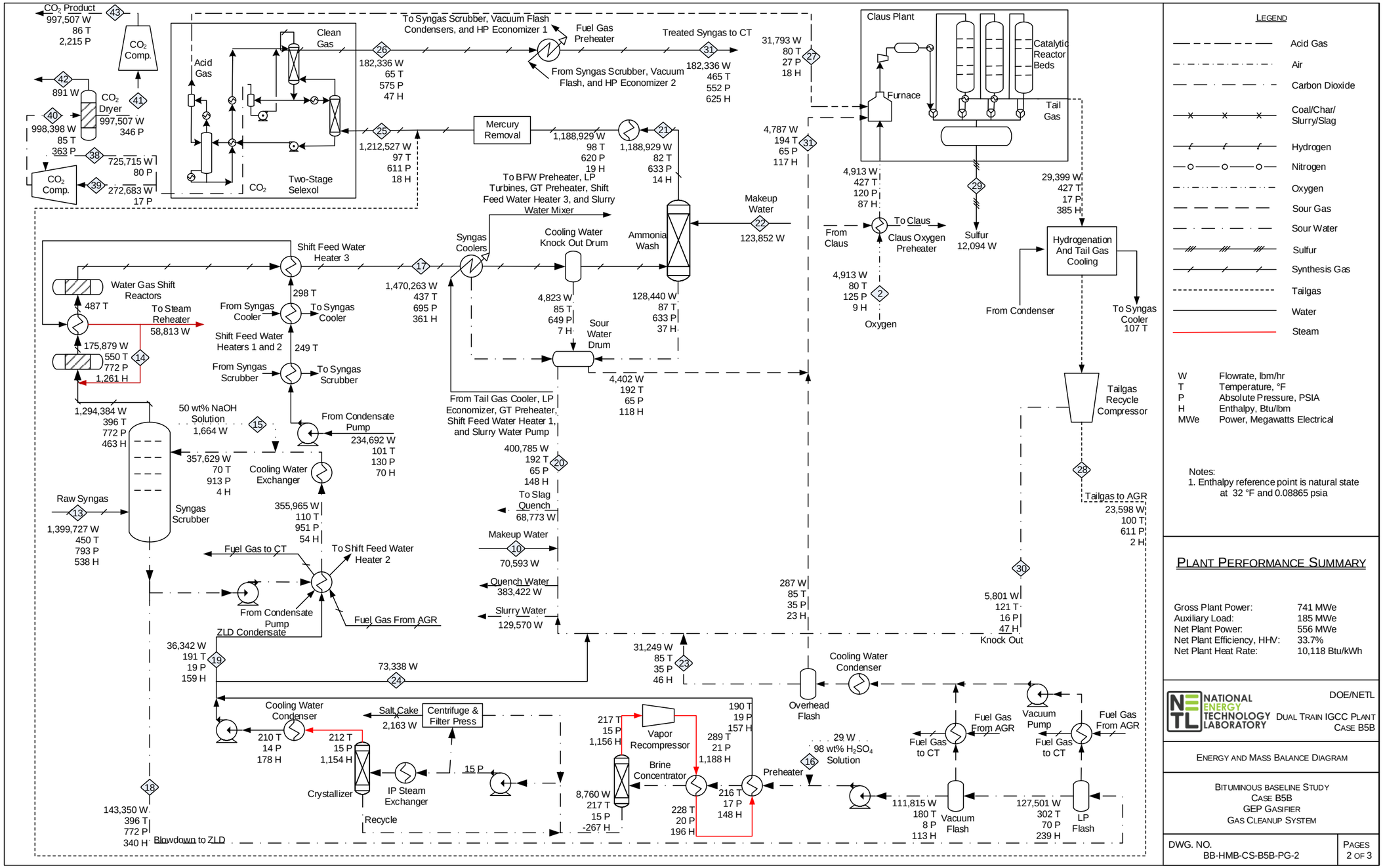

Exhibit 3-116. Case B5B combined cycle power generation energy and mass balance

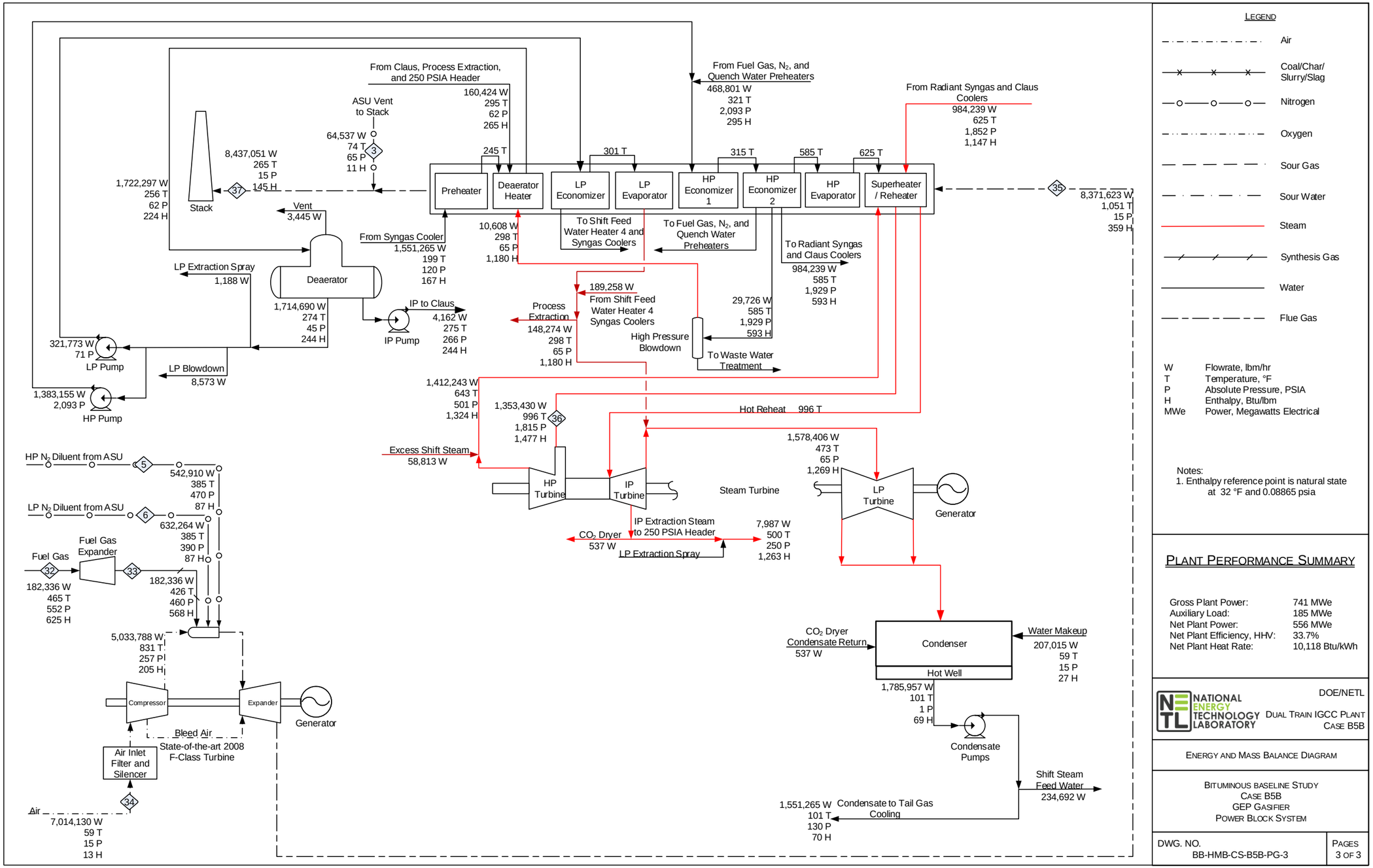

This page intentionally left blank

3.4.10 Case B5B – Major Equipment List

Major equipment items for the GEP gasifier with CO_2 capture are shown in the following tables. In general, the design conditions include a 10 percent design allowance for flows and heat duties and a 21 percent design allowance for heads on pumps and fans.

Case B5B – Account 1: Coal Handling

Equipment No.	Description	Type	Design Condition	Operating Qty.	Spares
1	Bottom Trestle Dumper and Receiving Hoppers	N/A	181 tonne (200 ton)	2	0
2	Feeder	Belt	570 tonne/hr (630 tph)	2	0
3	Conveyor No. 1	Belt	1,130 tonne/hr (1,250 tph)	1	0
4	Conveyor No. 2	Belt	1,130 tonne/hr (1,250 tph)	1	0
5	Stacker/Reclaimer	Traveling, linear	1,130 tonne/hr (1,250 tph)	1	0
6	Reclaim Hopper	N/A	50 tonne (50 ton)	2	1
7	Feeder	Vibratory	180 tonne/hr (200 tph)	2	1
8	Conveyor No. 3	Belt w/ tripper	360 tonne/hr (400 tph)	1	0
9	Coal Surge Bin w/ Vent Filter	Dual outlet	180 tonne (200 ton)	2	0
10	Crusher	Impactor reduction	8 cm x 0 - 3 cm x 0 (3" x 0 - 1-1/4" x 0)	2	0
11	Conveyor No. 4	Belt w/tripper	360 tonne/hr (400 tph)	1	0
12	Conveyor No. 5	Belt w/ tripper	360 tonne/hr (400 tph)	1	0
13	Coal Silo w/ Vent Filter and Slide Gates	Field erected	800 tonne (880 ton)	3	0

Case B5B – Account 2: Coal Preparation and Feed

Equipment No.	Description	Type	Design Condition	Operating Qty.	Spares
1	Feeder	Vibratory	80 tonne/hr (90 tph)	3	0
2	Conveyor No. 6	Belt w/tripper	240 tonne/hr (270 tph)	1	0
3	Rod Mill Feed Hopper	Dual Outlet	480 tonne (530 ton)	1	0
4	Weigh Feeder	Belt	120 tonne/hr (130 tph)	2	0
5	Rod Mill	Rotary	120 tonne/hr (130 tph)	2	0
6	Slurry Water Storage Tank with Agitator	Field erected	297,180 liters (78,510 gal)	2	0
7	Slurry Water Pumps	Centrifugal	830 lpm (220 gpm)	2	1
8	Trommel Screen	Coarse	170 tonne/hr (190 tph)	2	0
9	Rod Mill Discharge Tank with Agitator	Field erected	388,750 liters (102,700 gal)	2	0
10	Rod Mill Product Pumps	Centrifugal	3,200 lpm (900 gpm)	2	2
11	Slurry Storage Tank with Agitator	Field erected	1,166,300 liters (308,100 gal)	2	0
12	Slurry Recycle Pumps	Centrifugal	6,500 lpm (1,700 gpm)	2	2
13	Slurry Product Pumps	Positive displacement	3,200 lpm (900 gpm)	2	2

Case B5B – Account 3: Feedwater and Miscellaneous Balance of Plant Systems

Equipment No.	Description	Type	Design Condition	Operating Qty.	Spares
1	Demineralized Water Storage Tank	Vertical, cylindrical, outdoor	6,201,000 liters (1,638,000 gal)	2	0
2	Condensate Pumps	Vertical canned	7,480 lpm @ 90 m H_2O (1,980 gpm @ 300 ft H_2O)	2	1

Equipment No.	Description	Type	Design Condition	Operating Qty.	Spares
3	Deaerator (integral w/ HRSG)	Horizontal spray type	430,000 kg/hr (947,000 lb/hr)	2	0
4	Intermediate Pressure Feedwater Pump	Horizontal centrifugal, single stage	1,390 lpm @ 20 m H_2O (370 gpm @ 70 ft H_2O)	2	1
5	High Pressure Feedwater Pump No. 1	Barrel type, multi-stage, centrifugal	HP water: 5,980 lpm @ 1,700 m H_2O (1,580 gpm @ 5,700 ft H_2O)	2	1
6	High Pressure Feedwater Pump No. 2	Barrel type, multi-stage, centrifugal	IP water: 2,030 lpm @ 210 m H_2O (540 gpm @ 670 ft H_2O)	2	1
7	Auxiliary Boiler	Shop fabricated, water tube	18,000 kg/hr, 2.8 MPa, 343°C (40,000 lb/hr, 400 psig, 650°F)	1	0
8	Service Air Compressors	Flooded Screw	28 m^3/min @ 0.7 MPa (1,000 scfm @ 100 psig)	2	1
9	Instrument Air Dryers	Duplex, regenerative	28 m^3/min (1,000 scfm)	2	1
10	Closed Cycle Cooling Heat Exchangers	Plate and frame	421 GJ/hr (399 MMBtu/hr) each	2	0
11	Closed Cycle Cooling Water Pumps	Horizontal centrifugal	151,000 lpm @ 20 m H_2O (39,900 gpm @ 70 ft H_2O)	2	1
12	Engine-Driven Fire Pump	Vertical turbine, diesel engine	3,785 lpm @ 110 m H_2O (1,000 gpm @ 350 ft H_2O)	1	1
13	Fire Service Booster Pump	Two-stage horizontal centrifugal	2,650 lpm @ 80 m H_2O (700 gpm @ 250 ft H_2O)	1	1
14	Municipal Water Pumps	Stainless steel, single suction	3,790 lpm @ 20 m H_2O (1,000 gpm @ 60 ft H_2O)	2	1
15	Ground Water Pumps	Stainless steel, single suction	2,530 lpm @ 270 m H_2O (670 gpm @ 880 ft H_2O)	3	1
16	Filtered Water Pumps	Stainless steel, single suction	1,670 lpm @ 50 m H_2O (440 gpm @ 160 ft H_2O)	2	1
17	Filtered Water Tank	Vertical, cylindrical	802,000 liter (212,000 gal)	2	0
18	Makeup Water Demineralizer	Anion, cation, and mixed bed	860 lpm (230 gpm)	2	0
19	Liquid Waste Treatment System	N/A	10 years, 24-hour storm	1	0
20	Process Water Treatment	Vacuum flash, brine concentrator, and crystallizer	Vacuum Flash - Inlet: 36,000 kg/hr (79,000 lb/hr) Outlet: 6,410 ppmw Cl- Brine Concentrator Inlet - 28,000 kg/hr (61,000 lb/hr) Crystallizer Inlet - 2,000 kg/hr (5,000 lb/hr)	2	0

Case B5B – Account 4: Gasifier, ASU, and Accessories

Equipment No.	Description	Type	Design Condition	Operating Qty.	Spares
1	Gasifier	Pressurized slurry-feed, entrained bed	2,900 tonne/day, 5.6 MPa (3,200 tpd, 815 psia)	2	0
2	Synthesis Gas Cooler	Vertical downflow radiant heat exchanger with outlet quench chamber	254,000 kg/hr (559,000 lb/hr)	2	0
3	Synthesis Gas Cyclone	High efficiency	N/A	2	0
4	HCl Scrubber	Ejector Venturi	349,000 kg/hr (770,000 lb/hr)	2	0
5	Ammonia Wash	Counter-flow spray tower	298,000 kg/hr (656,000 lb/hr) @ 4.5 MPa (649 psia)	2	0

Equipment No.	Description	Type	Design Condition	Operating Qty.	Spares
6	Primary Sour Water Stripper	Counter-flow with external reboiler	N/A	2	0
7	Secondary Sour Water Stripper	Counter-flow with external reboiler	N/A	2	0
8	Low Temperature Heat Recovery Coolers	Shell and tube with condensate drain	367,000 kg/hr (809,000 lb/hr)	6	0
9	Low Temperature Heat Recovery Knockout Drum	Vertical with mist eliminator	299,000 kg/hr, 59°C, 4.5 MPa (659,000 lb/hr, 138°F, 654 psia)	2	0
10	Saturation Water Economizers	Shell and tube	N/A	4	0
11	HP Nitrogen Gas Saturator	Direct Injection	135,000 kg/hr, 196°C, 3.2 MPa (299,000 lb/hr, 385°F, 470 psia)	2	0
12	LP Nitrogen Gas Saturator	Direct Injection	158,000 kg/hr, 196°C, 2.7 MPa (348,000 lb/hr, 385°F, 390 psia)	2	0
13	Saturator Water Pump	Centrifugal	N/A	2	2
14	Saturated Nitrogen Reheaters	Shell and tube	N/A	4	0
15	Synthesis Gas Reheaters	Shell and tube	Reheater 1: 32,000 kg/hr (71,000 lb/hr) Reheater 2: 13,000 kg/hr (29,000 lb/hr) Reheater 3: N/A Reheater 4: N/A Reheater 5: 45,000 kg/hr (100,000 lb/hr) Reheater 6: 45,000 kg/hr (100,000 lb/hr)	2	0
16	Flare Stack	Self-supporting, carbon steel, stainless steel top, pilot ignition	323,000 kg/hr (712,000 lb/hr) syngas	2	0
17	ASU Main Air Compressor	Centrifugal, multi-stage	6,000 m^3/min @ 1.6 MPa (197,000 scfm @ 236 psia)	2	0
18	Cold Box	Vendor design	2,400 tonne/day (2,600 tpd) of 95% purity O_2	2	0
19	Gasifier O_2 Pump	Centrifugal, multi-stage	1,000 m^3/min (42,000 scfm) Suction - 1.0 MPa (130 psia) Discharge - 6.5 MPa (940 psia)	2	0
20	AGR Nitrogen Boost Compressor	Centrifugal, multi-stage	N/A	2	0
21	High Pressure Nitrogen Diluent Compressor	Centrifugal, multi-stage	2,000 m^3/min (67,000 scfm) Suction - 0.4 MPa (70 psia) Discharge - 3.3 MPa (480 psia)	2	0
22	Low Pressure Nitrogen Diluent Compressor	Centrifugal, single-stage	2,220 m^3/min (78,000 scfm) Suction - 0.4 MPa (70 psia) Discharge - 2.7 MPa (400 psia)	2	0
23	Gasifier Nitrogen Boost Compressor	Centrifugal, single-stage	N/A	2	0

Case B5B – Account 5: Syngas Cleanup

Equipment No.	Description	Type	Design Condition	Operating Qty.	Spares
1	Mercury Adsorber 1	Sulfated carbon bed	297,000 kg/hr (654,000 lb/hr) 28°C (82°F) 4.4 MPa (633 psia)	2	0
2	Mercury Adsorber 2	Sulfated carbon bed	297,000 kg/hr (654,000 lb/hr) 36°C (98°F) 4.2 MPa (616 psia)	2	0
3	Sulfur Plant	Claus type	145 tonne/day (160 tpd)	1	0
4	WGS Reactors	Fixed bed, catalytic	183,000 kg/hr (404,000 lb/hr) 216°C (420°F) 5.3 MPa (770 psia)	4	0
5	Shift Reactor Heat Recovery Exchangers	Shell and Tube	Exchanger 1: 121 GJ/hr (114 MMBtu/hr) Exchanger 2: 88 GJ/hr (83 MMBtu/hr) Exchanger 3: 47 GJ/hr (45 MMBtu/hr) Exchanger 4: 48 GJ/hr (45 MMBtu/hr)	8	0
6	Acid Gas Removal Plant	Two-stage Selexol	605,000 kg/hr (1,334,000 lb/hr) 36°C (97°F) 4.2 MPa (611 psia)	1	0
7	Hydrogenation Reactor	Fixed bed, catalytic	15,000 kg/hr (32,000 lb/hr) 219°C (427°F) 0.1 MPa (16.7743276 psia)	1	0
8	Tail Gas Recycle Compressor	Centrifugal	12,000 kg/hr (26,000 lb/hr) each	1	0
9	Candle Filter	Pressurized filter with pulse-jet cleaning	N/A	2	0
10	CO_2 Dryer	Triethylene glycol	Inlet: 152 m3/min @ 2.5 MPa (5,352 acfm @ 363 psia) Outlet: 2.4 MPa (346 psia) Water Recovered: 404 kg/hr (891 lb/hr)	1	0
11	CO_2 Compressor	Integrally geared, multi-stage centrifugal	10 m3/min @ 15.3 MPa (349 acfm @ 2,217 psia)	1	0
12	CO_2 Aftercooler	Shell and tube heat exchanger	Outlet: 15.3 MPa, 30°C (2,215 psia, 86°F) Duty: 78 MMkJ/hr (74 MMBtu/hr)	1	0

Case B5B – Account 6: Combustion Turbine and Accessories

Equipment No.	Description	Type	Design Condition	Operating Qty.	Spares
1	Combustion Turbine	State-of-the-art 2008 F-Class	232 MW	2	0
2	Combustion Turbine Generator	TEWAC	260 MVA @ 0.9 p.f., 24 kV, 60 Hz, 3-phase	2	0

Case B5B – Account 7: HRSG, Ductwork, and Stack

Equipment No.	Description	Type	Design Condition	Operating Qty.	Spares
1	Stack	CS plate, type 409SS liner	76 m (250 ft) high x 8.5 m (28 ft) diameter	1	0

Equipment No.	Description	Type	Design Condition	Operating Qty.	Spares
2	Heat Recovery Steam Generator	Drum, multi-pressure with economizer section and integral deaerator	Main steam - 337,648 kg/hr, 12.4 MPa/535°C (744,386 lb/hr, 1,800 psig/996°F) Reheat steam - 352,321 kg/hr, 3.3 MPa/535°C (776,734 lb/hr, 477 psig/996°F)	2	0

Case B5B – Account 8: Steam Turbine and Accessories

Equipment No.	Description	Type	Design Condition	Operating Qty.	Spares
1	Steam Turbine	Commercially available advanced steam turbine	289 MW 12.4 MPa/535°C/535°C (1,800 psig/ 996°F/996°F)	1	0
2	Steam Turbine Generator	Hydrogen cooled, static excitation	320 MVA @ 0.9 p.f., 24 kV, 60 Hz, 3-phase	1	0
3	Surface Condenser	Single pass, divided waterbox including vacuum pumps	1,710GJ/hr (1,620 MMBtu/hr), Inlet water temperature 16°C (60°F), Water temperature rise 11°C (20°F)	1	0
4	Steam Bypass	One per HRSG	50% steam flow @ design steam conditions	2	0

Case B5B – Account 9: Cooling Water System

Equipment No.	Description	Type	Design Condition	Operating Qty.	Spares
1	Circulating Water Pumps	Vertical, wet pit	487,000 lpm @ 30 m (129,000 gpm @ 100 ft)	2	1
2	Cooling Tower	Evaporative, mechanical draft, multi-cell	11°C (51.5°F) wet bulb/ 16°C (60°F) CWT/ 27°C (80°F) HWT/ 2,710 GJ/hr (2,570 MMBtu/hr) heat duty	1	0

Case B5B – Account 10: Slag Recovery and Handling

Equipment No.	Description	Type	Design Condition	Operating Qty.	Spares
1	Slag Quench Tank	Water bath	252,000 liters (67,000 gal)	2	0
2	Slag Crusher	Roll	13 tonne/hr (15 tph)	2	0
3	Slag Depressurizer	Lock Hopper	13 tonne/hr (15 tph)	2	0
4	Slag Receiving Tank	Horizontal, weir	152,000 liters (40,000 gal)	2	0
5	Black Water Overflow Tank	Shop fabricated	68,000 liters (18,000 gal)	2	0
6	Slag Conveyor	Drag chain	13 tonne/hr (15 tph)	2	0
7	Slag Separation Screen	Vibrating	13 tonne/hr (15 tph)	2	0
8	Coarse Slag Conveyor	Belt/bucket	13 tonne/hr (15 tph)	2	0
9	Fine Ash Settling Tank	Vertical, gravity	215,000 liters (57,000 gal)	2	0
10	Fine Ash Recycle Pumps	Horizontal centrifugal	60 lpm @ 14 m H_2O (10 gpm @ 46 ft H_2O)	2	2
11	Grey Water Storage Tank	Field erected	69,000 liters (18,000 gal)	2	0
12	Grey Water Pumps	Centrifugal	240 lpm @ 560 m H_2O (60 gpm @ 1,850 ft H_2O)	2	2
13	Slag Storage Bin	Vertical, field erected	1,000 tonne (1,000 tons)	2	0
14	Unloading Equipment	Telescoping chute	110 tonne/hr (120 tph)	1	0

Case B5B – Account 11: Accessory Electric Plant

Equipment No.	Description	Type	Design Condition	Operating Qty.	Spares
1	CTG Transformer	Oil-filled	24 kV/345 kV, 260 MVA, 3-ph, 60 Hz	2	0
2	STG Transformer	Oil-filled	24 kV/345 kV, 280 MVA, 3-ph, 60 Hz	1	0
3	High Voltage Auxiliary Transformer	Oil-filled	345 kV/13.8 kV, 81 MVA, 3-ph, 60 Hz	2	0
4	Medium Voltage Transformer	Oil-filled	24 kV/4.16 kV, 41 MVA, 3-ph, 60 Hz	1	1
5	Low Voltage Transformer	Dry ventilated	4.16 kV/480 V, 6 MVA, 3-ph, 60 Hz	1	1
6	CTG Isolated Phase Bus Duct and Tap Bus	Aluminum, self-cooled	24 kV, 3-ph, 60 Hz	2	0
7	STG Isolated Phase Bus Duct and Tap Bus	Aluminum, self-cooled	24 kV, 3-ph, 60 Hz	1	0
8	Medium Voltage Switchgear	Metal clad	4.16 kV, 3-ph, 60 Hz	1	1
9	Low Voltage Switchgear	Metal enclosed	480 V, 3-ph, 60 Hz	1	1
10	Emergency Diesel Generator	Sized for emergency shutdown	750 kW, 480 V, 3-ph, 60 Hz	1	0

Case B5B – Account 12: Instrumentation and Control

Equipment No.	Description	Type	Design Condition	Operating Qty.	Spares
1	DCS - Main Control	Monitor/keyboard; Operator printer (laser color); Engineering printer (laser B&W)	Operator stations/printers and engineering stations/printers	1	0
2	DCS - Processor	Microprocessor with redundant input/output	N/A	1	0
3	DCS - Data Highway	Fiber optic	Fully redundant, 25% spare	1	0

3.4.11 Case B5B – Cost Estimating

The cost estimating methodology was described previously in Section 2.7. Exhibit 3-117 shows a detailed breakdown of the capital costs; Exhibit 3-118 shows the owner's costs, TOC, and TASC; Exhibit 3-119 shows the initial and annual O&M costs; and Exhibit 3-120 shows the LCOE breakdown.

The estimated TPC of the GEP gasifier with CO_2 capture is $5,240/kW. Process contingency represents 5.4 percent of the TPC, and project contingency represents 14.9 percent. The LCOE, including CO_2 T&S costs of $8.1/MWh, is $152.3/MWh.

Exhibit 3-117. Case B5B total plant cost details

Case:	B5B	– GEP Radiant IGCC w/ CO_2					Estimate Type:			Conceptual	
Plant Size (MW, net):	556						Cost Base:			Dec 2018	
Item No.	Description	Equipment Cost	Material Cost	Labor		Bare Erected Cost	Eng'g CM H.O.& Fee	Contingencies		Total Plant Cost	
				Direct	Indirect			Process	Project	$/1,000	$/kW
1	Coal Handling										
1.1	Coal Receive & Unload	$990	$0	$477	$0	$1,467	$220	$0	$337	$2,025	$4
1.2	Coal Stackout & Reclaim	$3,237	$0	$774	$0	$4,011	$602	$0	$922	$5,535	$10
1.3	Coal Conveyors & Yard Crush	$30,879	$0	$7,860	$0	$38,739	$5,811	$0	$8,910	$53,460	$96
1.4	Other Coal Handling	$4,810	$0	$1,082	$0	$5,892	$884	$0	$1,355	$8,131	$15
1.9	Coal & Sorbent Handling Foundations	$0	$87	$226	$0	$313	$47	$0	$72	$432	$1
	Subtotal	**$39,916**	**$87**	**$10,420**	**$0**	**$50,422**	**$7,563**	**$0**	**$11,597**	**$69,583**	**$125**
2	Coal Preparation & Feed										
2.1	Coal Crushing & Drying	$2,400	$145	$345	$0	$2,890	$433	$0	$665	$3,988	$7
2.2	Prepared Coal Storage & Feed	$7,372	$1,771	$1,142	$0	$10,285	$1,543	$0	$2,366	$14,193	$26
2.3	Slurry Coal Injection System	$7,228	$0	$3,151	$0	$10,380	$1,557	$0	$2,387	$14,324	$26
2.4	Miscellaneous Coal Preparation & Feed	$728	$532	$1,567	$0	$2,826	$424	$0	$650	$3,901	$7
2.9	Coal & Sorbent Feed Foundation	$0	$1,771	$1,520	$0	$3,291	$494	$0	$757	$4,541	$8
	Subtotal	**$17,729**	**$4,219**	**$7,724**	**$0**	**$29,671**	**$4,451**	**$0**	**$6,824**	**$40,946**	**$74**
3	Feedwater & Miscellaneous BOP Systems										
3.1	Feedwater System	$1,999	$3,426	$1,713	$0	$7,138	$1,071	$0	$1,642	$9,851	$18
3.2	Water Makeup & Pretreating	$5,513	$551	$3,124	$0	$9,189	$1,378	$0	$3,170	$13,738	$25
3.3	Other Feedwater Subsystems	$1,033	$339	$322	$0	$1,693	$254	$0	$389	$2,337	$4
3.4	Service Water Systems	$1,648	$3,145	$10,185	$0	$14,978	$2,247	$0	$5,167	$22,392	$40
3.5	Other Boiler Plant Systems	$268	$97	$243	$0	$608	$91	$0	$140	$839	$2
3.6	Natural Gas Pipeline and Start-Up System	$7,253	$312	$234	$0	$7,799	$1,170	$0	$1,794	$10,762	$19
3.7	Waste Water Treatment Equipment	$7,564	$0	$4,636	$0	$12,200	$1,830	$0	$4,209	$18,239	$33
3.8	Vacuum Flash, Brine Concentrator, & Crystallizer	$25,856	$0	$16,016	$0	$41,872	$6,281	$0	$14,446	$62,598	$112
3.9	Miscellaneous Plant Equipment	$15,444	$2,025	$7,849	$0	$25,318	$3,798	$0	$8,735	$37,851	$68
	Subtotal	**$66,577**	**$9,896**	**$44,322**	**$0**	**$120,795**	**$18,119**	**$0**	**$39,692**	**$178,606**	**$321**
4	Gasifier, ASU, & Accessories										
4.1	Gasifier & Auxiliaries (GEP)	$513,580	$0	$282,918	$0	$796,498	$119,475	$111,510	$154,122	$1,181,605	$2,124
4.2	Syngas Cooler	w/4.1	w/4.1	w/4.1	$0	$0	$0	$0	$0	$0	$0
4.3	Air Separation Unit/Oxidant Compression	$58,131	$0	$22,085	$0	$80,216	$12,032	$0	$13,837	$106,085	$191
4.5	Miscellaneous Gasification Equipment	$3,913	$0	$2,156	$0	$6,069	$910	$0	$1,047	$8,026	$14

Case:	B5B – GEP Radiant IGCC w/ CO_2						Estimate Type:			Conceptual	
Plant Size (MW, net):	556						Cost Base:			Dec 2018	
Item No.	Description	Equipment Cost	Material Cost	Labor		Bare Erected Cost	Eng'g CM H.O.& Fee	Contingencies		Total Plant Cost	
				Direct	Indirect			Process	Project	$/1,000	$/kW
4.6	Low Temperature Heat Recovery & Flue Gas Saturation	$45,018	$0	$17,103	$0	$62,122	$9,318	$0	$14,288	$85,728	$154
4.7	Flare Stack System	$1,932	$0	$341	$0	$2,272	$341	$0	$392	$3,005	$5
4.8	Black Water & Sour Gas Section	w/4.1	w/4.1	w/4.1	$0	$0	$0	$0	$0	$0	$0
4.15	Major Component Rigging	$218	$0	$120	$0	$338	$51	$0	$58	$447	$1
4.16	Gasification Foundations	$0	$407	$355	$0	$763	$114	$0	$219	$1,096	$2
	Subtotal	**$622,791**	**$407**	**$325,078**	**$0**	**$948,277**	**$142,242**	**$111,510**	**$183,964**	**$1,385,992**	**$2,491**
5	Syngas Cleanup										
5.1	Double Stage Selexol	$126,860	$0	$51,816	$0	$178,677	$26,802	$35,735	$48,243	$289,456	$520
5.2	Sulfur Removal	w/5.1	w/5.1	w/5.1	$0	$0	$0	$0	$0	$0	$0
5.3	Elemental Sulfur Plant	$48,681	$9,489	$62,377	$0	$120,546	$18,082	$0	$27,726	$166,354	$299
5.4	Carbon Dioxide (CO_2) Compression & Drying	$32,248	$4,838	$13,969	$0	$51,054	$7,658	$0	$11,743	$70,455	$127
5.5	Carbon Dioxide (CO_2) Compressor Aftercooler	$481	$76	$206	$0	$764	$115	$0	$176	$1,054	$2
5.6	Mercury Removal (Carbon Bed)	$283	$0	$214	$0	$497	$75	$25	$119	$715	$1
5.7	Water Gas Shift (WGS) Reactors	$88,465	$0	$35,368	$0	$123,833	$18,575	$0	$28,482	$170,889	$307
5.10	Blowback Gas Systems	$675	$379	$212	$0	$1,267	$190	$0	$218	$1,675	$3
5.11	Fuel Gas Piping	$0	$958	$627	$0	$1,585	$238	$0	$365	$2,188	$4
5.12	Gas Cleanup Foundations	$0	$227	$153	$0	$380	$57	$0	$131	$568	$1
	Subtotal	**$297,693**	**$15,968**	**$164,941**	**$0**	**$478,603**	**$71,790**	**$35,760**	**$117,202**	**$703,355**	**$1,264**
6	Combustion Turbine & Accessories										
6.1	Combustion Turbine Generator	$76,557	$0	$5,425	$0	$81,983	$12,297	$8,198	$15,372	$117,850	$212
6.2	Syngas Expander	$2,132	$0	$293	$0	$2,425	$364	$0	$418	$3,207	$6
6.3	Combustion Turbine Accessories	$2,687	$0	$164	$0	$2,851	$428	$0	$492	$3,770	$7
6.4	Compressed Air Piping	$0	$509	$333	$0	$842	$126	$0	$194	$1,162	$2
6.5	Combustion Turbine Foundations	$0	$216	$250	$0	$467	$70	$0	$161	$697	$1
	Subtotal	**$81,377**	**$726**	**$6,465**	**$0**	**$88,567**	**$13,285**	**$8,198**	**$16,636**	**$126,687**	**$228**
7	HRSG, Ductwork, & Stack										
7.1	Heat Recovery Steam Generator	$33,953	$0	$6,574	$0	$40,527	$6,079	$0	$6,991	$53,597	$96
7.2	Heat Recovery Steam Generator Accessories	$12,123	$0	$2,347	$0	$14,470	$2,171	$0	$2,496	$19,137	$34
7.3	Ductwork	$0	$1,091	$765	$0	$1,856	$278	$0	$427	$2,561	$5
7.4	Stack	$9,277	$0	$3,462	$0	$12,740	$1,911	$0	$2,198	$16,848	$30
7.5	Heat Recovery Steam Generator, Ductwork & Stack Foundations	$0	$231	$232	$0	$462	$69	$0	$160	$691	$1
	Subtotal	**$55,354**	**$1,322**	**$13,379**	**$0**	**$70,055**	**$10,508**	**$0**	**$12,271**	**$92,834**	**$167**

Case:	B5B – GEP Radiant IGCC w/ CO_2						Estimate Type:			Conceptual	
Plant Size (MW, net):	556						Cost Base:			Dec 2018	
Item No.	Description	Equipment Cost	Material Cost	Labor		Bare Erected Cost	Eng'g CM H.O.& Fee	Contingencies		Total Plant Cost	
				Direct	Indirect			Process	Project	$/1,000	$/kW
8	Steam Turbine & Accessories										
8.1	Steam Turbine Generator & Accessories	$37,092	$0	$5,757	$0	$42,849	$6,427	$0	$7,391	$56,667	$102
8.2	Steam Turbine Plant Auxiliaries	$1,802	$0	$4,103	$0	$5,906	$886	$0	$1,019	$7,811	$14
8.3	Condenser & Auxiliaries	$7,207	$0	$4,092	$0	$11,299	$1,695	$0	$1,949	$14,943	$27
8.4	Steam Piping	$6,720	$0	$2,914	$0	$9,634	$1,445	$0	$2,770	$13,849	$25
8.5	Turbine Generator Foundations	$0	$281	$496	$0	$777	$117	$0	$268	$1,162	$2
	Subtotal	**$52,821**	**$281**	**$17,362**	**$0**	**$70,465**	**$10,570**	**$0**	**$13,397**	**$94,431**	**$170**
9	Cooling Water System										
9.1	Cooling Towers	$12,044	$0	$3,648	$0	$15,692	$2,354	$0	$2,707	$20,753	$37
9.2	Circulating Water Pumps	$1,566	$0	$117	$0	$1,683	$252	$0	$290	$2,226	$4
9.3	Circulating Water System Auxiliaries	$10,734	$0	$1,533	$0	$12,267	$1,840	$0	$2,116	$16,223	$29
9.4	Circulating Water Piping	$0	$6,038	$5,468	$0	$11,507	$1,726	$0	$2,646	$15,879	$29
9.5	Make-up Water System	$657	$0	$903	$0	$1,560	$234	$0	$359	$2,152	$4
9.6	Component Cooling Water System	$219	$262	$180	$0	$661	$99	$0	$152	$913	$2
9.7	Circulating Water System Foundations	$0	$498	$885	$0	$1,383	$208	$0	$477	$2,068	$4
	Subtotal	**$25,220**	**$6,799**	**$12,735**	**$0**	**$44,753**	**$6,713**	**$0**	**$8,748**	**$60,214**	**$108**
10	Slag Recovery & Handling										
10.1	Slag Dewatering & Cooling	$2,093	$0	$1,025	$0	$3,118	$468	$0	$538	$4,123	$7
10.2	Gasifier Ash Depressurization	$1,186	$0	$581	$0	$1,766	$265	$0	$305	$2,336	$4
10.3	Cleanup Ash Depressurization	$533	$0	$261	$0	$794	$119	$0	$137	$1,050	$2
10.6	Ash Storage Silos	$1,182	$0	$1,276	$0	$2,458	$369	$0	$424	$3,251	$6
10.7	Ash Transport & Feed Equipment	$455	$0	$106	$0	$561	$84	$0	$97	$742	$1
10.8	Miscellaneous Ash Handling Equipment	$65	$80	$24	$0	$169	$25	$0	$29	$223	$0
10.9	Ash/Spent Sorbent Foundation	$0	$467	$607	$0	$1,075	$161	$0	$371	$1,607	$3
	Subtotal	**$5,513**	**$547**	**$3,880**	**$0**	**$9,941**	**$1,491**	**$0**	**$1,900**	**$13,332**	**$24**
11	Accessory Electric Plant										
11.1	Generator Equipment	$2,702	$0	$2,038	$0	$4,741	$711	$0	$818	$6,270	$11
11.2	Station Service Equipment	$4,244	$0	$364	$0	$4,608	$691	$0	$795	$6,094	$11
11.3	Switchgear & Motor Control	$25,609	$0	$4,443	$0	$30,052	$4,508	$0	$5,184	$39,744	$71
11.4	Conduit & Cable Tray	$0	$113	$327	$0	$440	$66	$0	$127	$633	$1
11.5	Wire & Cable	$0	$1,554	$2,777	$0	$4,331	$650	$0	$1,245	$6,226	$11
11.6	Protective Equipment	$241	$0	$837	$0	$1,078	$162	$0	$186	$1,426	$3
11.7	Standby Equipment	$852	$0	$786	$0	$1,638	$246	$0	$283	$2,166	$4
11.8	Main Power Transformers	$6,422	$0	$131	$0	$6,553	$983	$0	$1,130	$8,667	$16
11.9	Electrical Foundations	$0	$74	$188	$0	$262	$39	$0	$91	$392	$1
	Subtotal	**$40,070**	**$1,741**	**$11,893**	**$0**	**$53,704**	**$8,056**	**$0**	**$9,858**	**$71,618**	**$129**

Case:	B5B – GEP Radiant IGCC w/ CO_2						Estimate Type:			Conceptual	
Plant Size (MW, net):	556						Cost Base:			Dec 2018	
Item No.	Description	Equipment Cost	Material Cost	Labor		Bare Erected Cost	Eng'g CM H.O.& Fee	Contingencies		Total Plant Cost	
				Direct	Indirect			Process	Project	$/1,000	$/kW
12	Instrumentation & Control										
12.1	Integrated Gasification and Combined Cycle Control Equipment	$642	$0	$353	$0	$995	$149	$0	$172	$1,316	$2
12.2	Combustion Turbine Control Equipment	$686	$0	$49	$0	$735	$110	$0	$127	$972	$2
12.3	Steam Turbine Control Equipment	$633	$0	$98	$0	$731	$110	$0	$126	$966	$2
12.4	Other Major Component Control Equipment	$1,225	$0	$835	$0	$2,060	$309	$103	$371	$2,843	$5
12.5	Signal Processing Equipment	$950	$0	$31	$0	$981	$147	$0	$169	$1,298	$2
12.6	Control Boards, Panels & Racks	$276	$0	$180	$0	$456	$68	$23	$109	$657	$1
12.7	Distributed Control System Equipment	$9,974	$0	$326	$0	$10,299	$1,545	$515	$1,854	$14,213	$26
12.8	Instrument Wiring & Tubing	$496	$397	$1,588	$0	$2,482	$372	$124	$744	$3,722	$7
12.9	Other Instrumentation & Controls Equipment	$1,113	$0	$552	$0	$1,665	$250	$83	$300	$2,298	$4
	Subtotal	**$15,995**	**$397**	**$4,012**	**$0**	**$20,404**	**$3,061**	**$848**	**$3,972**	**$28,285**	**$51**
13	Improvements to Site										
13.1	Site Preparation	$0	$423	$9,633	$0	$10,056	$1,508	$0	$3,469	$15,034	$27
13.2	Site Improvements	$0	$1,914	$2,706	$0	$4,620	$693	$0	$1,594	$6,906	$12
13.3	Site Facilities	$2,988	$0	$3,354	$0	$6,342	$951	$0	$2,188	$9,481	$17
	Subtotal	**$2,988**	**$2,337**	**$15,693**	**$0**	**$21,017**	**$3,153**	**$0**	**$7,251**	**$31,421**	**$56**
14	Buildings & Structures										
14.1	Combustion Turbine Area	$0	$314	$177	$0	$491	$74	$0	$85	$649	$1
14.3	Steam Turbine Building	$0	$2,769	$3,943	$0	$6,712	$1,007	$0	$1,158	$8,877	$16
14.4	Administration Building	$0	$884	$640	$0	$1,524	$229	$0	$263	$2,015	$4
14.5	Circulation Water Pumphouse	$0	$147	$78	$0	$225	$34	$0	$39	$298	$1
14.6	Water Treatment Buildings	$0	$371	$362	$0	$734	$110	$0	$127	$970	$2
14.7	Machine Shop	$0	$488	$334	$0	$823	$123	$0	$142	$1,088	$2
14.8	Warehouse	$0	$381	$245	$0	$626	$94	$0	$108	$828	$1
14.9	Other Buildings & Structures	$0	$279	$217	$0	$496	$74	$0	$86	$656	$1
14.10	Waste Treating Building & Structures	$0	$766	$1,463	$0	$2,229	$334	$0	$385	$2,948	$5
	Subtotal	**$0**	**$6,399**	**$7,460**	**$0**	**$13,859**	**$2,079**	**$0**	**$2,391**	**$18,329**	**$33**
	Total	**$1,324,044**	**$51,125**	**$645,364**	**$0**	**$2,020,533**	**$303,080**	**$156,316**	**$435,703**	**$2,915,632**	**$5,240**

Exhibit 3-118. Case B5B owner's costs

Description	$/1,000	$/kW
Pre-Production Costs		
6 Months All Labor	$23,792	$43
1 Month Maintenance Materials	$5,922	$11
1 Month Non-Fuel Consumables	$1,149	$2
1 Month Waste Disposal	$784	$1
25% of 1 Months Fuel Cost at 100% CF	$2,288	$4
2% of TPC	$58,313	$105
Total	**$92,248**	**$166**
Inventory Capital		
60-day supply of fuel and consumables at 100% CF	$20,142	$36
0.5% of TPC (spare parts)	$14,578	$26
Total	**$34,721**	**$62**
Other Costs		
Initial Cost for Catalyst and Chemicals	$29,381	$53
Land	$900	$2
Other Owner's Costs	$437,345	$786
Financing Costs	$78,722	$141
Total Overnight Costs (TOC)	**$3,588,949**	**$6,450**
TASC Multiplier (IOU, 35 year)	1.154	
Total As-Spent Cost (TASC)	**$4,143,125**	**$7,446**

Exhibit 3-119. Case B5B initial and annual operating and maintenance costs

Case:	B5B	– GEP Radiant IGCC w/ CO_2			Cost Base:	Dec 2018
Plant Size (MW, net):	556	Heat Rate-net (Btu/kWh):		10,118	Capacity Factor (%):	80
Operating & Maintenance Labor						
Operating Labor				**Operating Labor Requirements per Shift**		
Operating Labor Rate (base):		38.50	**$/hour**	Skilled Operator:	2.0	
Operating Labor Burden:		30.00	**% of base**	Operator:	11.0	
Labor O-H Charge Rate:		25.00	**% of labor**	Foreman:	1.0	
				Lab Techs, etc.:	3.0	
				Total:	**17.0**	
Fixed Operating Costs						
					Annual Cost	
					($)	**($/kW-net)**
Annual Operating Labor:					$7,453,446	$13.395
Maintenance Labor:					$30,614,140	$55.019
Administrative & Support Labor:					$9,516,897	$17.103
Property Taxes and Insurance:					$58,312,648	$104.798
Total:					**$105,897,131**	**$190.315**
Variable Operating Costs						
					($)	**($/MWh-net)**
Maintenance Material:					$56,854,832	$14.58018
Consumables						
	Initial Fill	**Per Day**	**Per Unit**	**Initial Fill**		
Water (gal/1000):	0	3,969	$1.90	$0	$2,201,757	$0.56463
Makeup and Waste Water Treatment Chemicals (ton):	0	11.8	$550.00	$0	$1,898,578	$0.48688
Sulfur-Impregnated Activated Carbon (ton):	78	0.107	$12,000.00	$939,432	$375,773	$0.09637
Water Gas Shift (WGS) Catalyst (ft^3):	15,607	10.7	$480.00	$7,491,563	$1,498,313	$0.38424
Selexol Solution (gal):	551,323	54.7	$38.00	$20,950,275	$606,622	$0.15557
Sodium Hydroxide (50 wt%, ton):	0.00	20.0	$600.00	$0	$3,498,833	$0.89726
Sulfuric Acid (98 wt%, ton):	0.00	0.353	$210.00	$0	$21,643	$0.00555
Claus Catalyst (ft^3):	w/equip.	2.00	$48.00	$0	$28,053	$0.00719
Triethylene Glycol (gal):	w/equip.	452	$6.80	$0	$896,534	$0.22991
Subtotal:				**$29,381,269**	**$11,026,105**	**$2.82760**
Waste Disposal						
Sulfur-Impregnated Activated Carbon (ton):	0	0.107	$80.00	$0	$2,505	$0.00064
WGS Catalyst (ft^3):	0	10.7	$2.50	$0	$7,804	$0.00200
Selexol Solution (gal):	0	54.7	$0.35	$0	$5,587	$0.00143
Claus Catalyst (ft^3):	0	2.00	$2.50	$0	$1,461	$0.00037
Crystallizer Solids (ton):	0	37.6	$38.00	$0	$416,756	$0.10688
Slag (ton):	0	635	$38.00	$0	$7,050,036	$1.80795
Triethylene Glycol (gal):	0	452	$0.35	$0	$46,145	$0.01183
Subtotal:				**$0**	**$7,530,294**	**$1.93111**
By-Products						
Sulfur (tons):	0	145	$0.00	$0	$0	$0.00000
Subtotal:				**$0**	**$0**	**$0.00000**
Variable Operating Costs Total:				**$29,381,269**	**$75,411,231**	**$19.33888**
Fuel Cost						
Illinois Number 6 (ton):	0	5,791	$51.96	$0	$87,859,022	$22.53107
Total:				**$0**	**$87,859,022**	**$22.53107**

Exhibit 3-120. Case B5B LCOE breakdown

Component	Value, $/MWh	Percentage
Capital	75.2	49%
Fixed	27.2	28%
Variable	19.3	13%
Fuel	22.5	15%
Total (Excluding T&S)	**144.2**	**N/A**
CO_2 T&S	8.1	5%
Total (Including T&S)	**152.3**	**N/A**

3.4.12 Case B5B-Q – GEP Quench IGCC with CO_2 Capture

In this section, the GEP gasification process for Case B5B-Q is described. The plant configuration is nearly identical to that of Case B5B, with the exception that this case is configured as a quench-only gasifier, compared to Case B5B, which was a radiant-only gasifier.

As was the case in Case B5B, the gross power output is constrained by the capacity of the two CTs, and since the CO_2 capture and compression process increases the auxiliary load on the plant, the net output is significantly reduced relative to Case B5A (499 MW versus 634 MW).

The process descriptions for Case B5B-Q are similar to Case B5B with several notable exceptions. The system descriptions follow the BFD provided in Exhibit 3-121 with the associated stream tables—providing process data for the numbered streams in the BFD—provided in Exhibit 3-122. Rather than repeating the entire process description, only differences from Case B5B are reported here.

3.4.12.1 Coal Preparation and Feed Systems

No differences from Case B5B.

3.4.12.2 Gasifier

The gasification process is the same as Case B5B with the exception that the syngas exiting the gasifier passes through a water quench where the temperature is reduced from 1,316°C (2,400°F) to 288°C (550°F).

Exhibit 3-121. Case B5B-Q block flow diagram, GEP quench-only IGCC with CO_2 capture

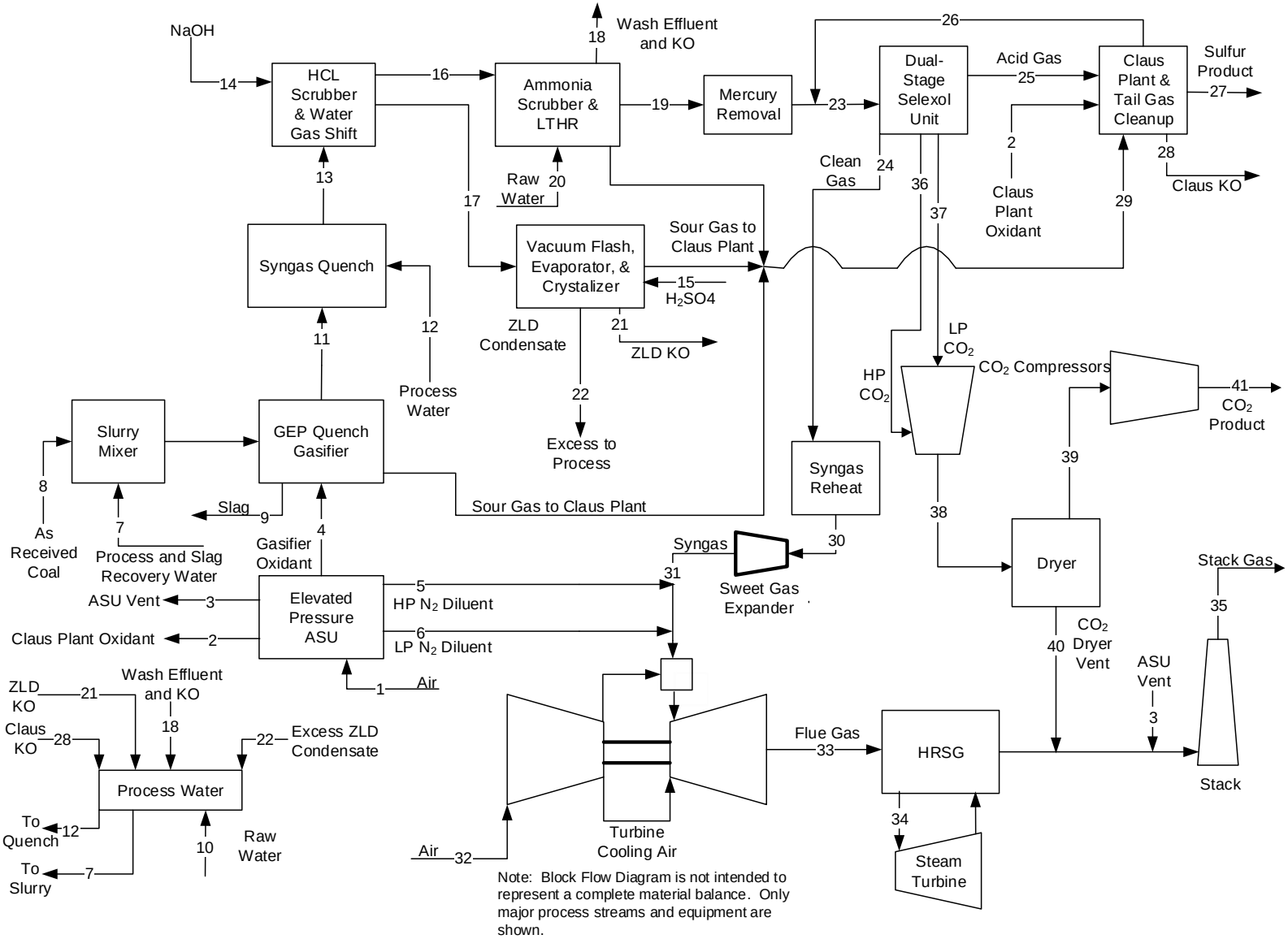

Note: Block Flow Diagram is not intended to represent a complete material balance. Only major process streams and equipment are shown.

Exhibit 3-122. Case B5B-Q stream table, GEP quench-only IGCC with capture

	1	2	3	4	5	6	7	8	9	10	11	12
V-L Mole Fraction												
Ar	0.0092	0.0343	0.0431	0.0343	0.0000	0.0000	0.0000	0.0000	0.0000	0.0000	0.0082	0.0000
CH_4	0.0000	0.0000	0.0000	0.0000	0.0000	0.0000	0.0000	0.0000	0.0000	0.0000	0.0011	0.0000
CO	0.0000	0.0000	0.0000	0.0000	0.0000	0.0000	0.0000	0.0000	0.0000	0.0000	0.3570	0.0000
CO_2	0.0003	0.0000	0.0076	0.0000	0.0000	0.0000	0.0002	0.0000	0.0000	0.0000	0.1383	0.0003
COS	0.0000	0.0000	0.0000	0.0000	0.0000	0.0000	0.0000	0.0000	0.0000	0.0000	0.0002	0.0000
H_2	0.0000	0.0000	0.0000	0.0000	0.0000	0.0000	0.0000	0.0000	0.0000	0.0000	0.3411	0.0000
H_2O	0.0099	0.0000	0.1565	0.0000	0.0000	0.0000	0.9914	0.0000	0.0000	0.9999	0.1365	0.9913
HCl	0.0000	0.0000	0.0000	0.0000	0.0000	0.0000	0.0000	0.0000	0.0000	0.0000	0.0004	0.0000
H_2S	0.0000	0.0000	0.0000	0.0000	0.0000	0.0000	0.0000	0.0000	0.0000	0.0000	0.0073	0.0000
N_2	0.7732	0.0157	0.7900	0.0157	0.9964	0.9964	0.0000	0.0000	0.0000	0.0000	0.0079	0.0000
NH_3	0.0000	0.0000	0.0000	0.0000	0.0000	0.0000	0.0083	0.0000	0.0000	0.0000	0.0021	0.0083
O_2	0.2074	0.9501	0.0028	0.9501	0.0036	0.0036	0.0000	0.0000	0.0000	0.0000	0.0000	0.0000
SO_2	0.0000	0.0000	0.0000	0.0000	0.0000	0.0000	0.0000	0.0000	0.0000	0.0000	0.0000	0.0000
NaCl	0.0000	0.0000	0.0000	0.0000	0.0000	0.0000	0.0000	0.0000	0.0000	0.0001	0.0000	0.0000
NaOH	0.0000	0.0000	0.0000	0.0000	0.0000	0.0000	0.0000	0.0000	0.0000	0.0000	0.0000	0.0000
Total	1.0000	1.0000	1.0000	1.0000	1.0000	1.0000	1.0000	0.0000	0.0000	1.0000	1.0000	1.0000
V-L Flowrate (kg_{mol}/hr)	25,755	73	1,111	5,475	8,787	10,229	4,995	0	0	5,737	22,945	22,429
V-L Flowrate (kg/hr)	743,202	2,344	30,104	176,334	246,273	286,699	89,985	0	0	103,364	461,334	404,116
Solids Flowrate (kg/hr)	0	0	0	0	0	0	0	219,048	24,033	0	0	0
Temperature (°C)	15	27	23	27	196	196	148	15	1,316	15	1,316	188
Pressure (MPa, abs)	0.10	0.86	0.45	6.48	3.24	2.69	5.79	0.10	5.62	0.10	5.62	6.45
Steam Table Enthalpy (kJ/kg)[A]	30.23	21.53	26.53	6.21	202.25	202.61	609.23	---	---	62.75	2,637.00	787.32
AspenPlus Enthalpy (kJ/kg)[B]	-97.58	-0.97	-1,767.37	-16.30	176.29	176.64	-15,251.12	-2,119.02	-727.24	-15,905.25	-4,036.55	-15,071.53
Density (kg/m^3)	1.2	11.2	5.8	87.9	23.1	19.2	901.3	---	---	999.4	8.5	862.1
V-L Molecular Weight	28.857	32.209	27.096	32.209	28.028	28.028	18.016	---	---	18.019	20.106	18.017
V-L Flowrate (lb_{mol}/hr)	56,779	160	2,449	12,070	19,371	22,551	11,012	0	0	12,647	50,585	49,448
V-L Flowrate (lb/hr)	1,638,480	5,168	66,369	388,749	542,939	632,063	198,383	0	0	227,879	1,017,067	890,923
Solids Flowrate (lb/hr)	0	0	0	0	0	0	0	482,918	52,984	0	0	0
Temperature (°F)	59	80	74	80	385	385	298	59	2,400	59	2,400	371
Pressure (psia)	14.7	125.0	65.0	940.0	470.0	390.0	840.0	14.7	815.0	14.7	815.0	935.0
Steam Table Enthalpy (Btu/lb)[A]	13.0	9.3	11.4	2.7	87.0	87.1	261.9	---	---	27.0	1,133.7	338.5
AspenPlus Enthalpy (Btu/lb)[B]	-42.0	-0.4	-759.8	-7.0	75.8	75.9	-6,556.8	-911.0	-312.7	-6,838.0	-1,735.4	-6,479.6
Density (lb/ft^3)	0.076	0.700	0.363	5.487	1.439	1.196	56.264	---	---	62.391	0.529	53.818

[A]Steam table reference conditions are 32.02°F & 0.089 psia

[B]Aspen thermodynamic reference state is the component's constituent elements in an ideal gas state at 25°C and 1 atm

Exhibit 3-122. Case B5B-Q stream table, GEP quench-only IGCC with capture (continued)

	13	14	15	16	17	18	19	20	21	22	23	24
V-L Mole Fraction												
Ar	0.0041	0.0000	0.0000	0.0048	0.0000	0.0000	0.0069	0.0000	0.0000	0.0000	0.0069	0.0112
CH_4	0.0006	0.0000	0.0000	0.0007	0.0000	0.0000	0.0010	0.0000	0.0000	0.0000	0.0009	0.0014
CO	0.1805	0.0000	0.0000	0.0148	0.0001	0.0000	0.0210	0.0000	0.0000	0.0000	0.0208	0.0337
CO_2	0.0701	0.0000	0.0000	0.2787	0.0007	0.0005	0.3926	0.0000	0.0008	0.0000	0.3972	0.0305
COS	0.0001	0.0000	0.0000	0.0000	0.0000	0.0000	0.0000	0.0000	0.0000	0.0000	0.0000	0.0000
H_2	0.1725	0.0000	0.0000	0.3987	0.0002	0.0000	0.5646	0.0000	0.0000	0.0000	0.5601	0.9122
H_2O	0.5590	0.6895	0.1000	0.2876	0.9952	0.9852	0.0012	0.9999	0.9911	0.9997	0.0012	0.0001
HCl	0.0002	0.0000	0.0000	0.0000	0.0000	0.0000	0.0000	0.0000	0.0000	0.0000	0.0000	0.0000
H_2S	0.0037	0.0000	0.0000	0.0044	0.0001	0.0001	0.0062	0.0000	0.0002	0.0000	0.0062	0.0000
N_2	0.0040	0.0000	0.0000	0.0047	0.0000	0.0000	0.0066	0.0000	0.0000	0.0000	0.0067	0.0109
NH_3	0.0051	0.0000	0.0000	0.0056	0.0023	0.0142	0.0000	0.0000	0.0079	0.0003	0.0000	0.0000
O_2	0.0000	0.0000	0.0000	0.0000	0.0000	0.0000	0.0000	0.0000	0.0000	0.0000	0.0000	0.0000
SO_2	0.0000	0.0000	0.0000	0.0000	0.0000	0.0000	0.0000	0.0000	0.0000	0.0000	0.0000	0.0000
NaCl	0.0000	0.0000	0.0000	0.0000	0.0014	0.0000	0.0000	0.0001	0.0000	0.0000	0.0000	0.0000
NaOH	0.0000	0.3105	0.0000	0.0000	0.0001	0.0000	0.0000	0.0000	0.0000	0.0000	0.0000	0.0000
Total	1.0000	1.0000	0.1000	1.0000	1.0000	1.0000	1.0000	1.0000	1.0000	1.0000	1.0000	1.0000
V-L Flowrate (kg_{mol}/hr)	45,373	31	0	38,734	6,670	14,884	27,339	3,586	1,717	4,914	27,653	16,887
V-L Flowrate (kg/hr)	865,406	774	25	745,529	120,651	268,152	538,876	64,611	30,959	88,533	550,336	82,775
Solids Flowrate (kg/hr)	0	0	0	0	0	0	0	0	0	0	0	0
Temperature (°C)	287	16	15	225	222	108	28	15	29	88	37	18
Pressure (MPa, abs)	5.58	6.41	0.13	4.89	5.43	0.45	4.45	0.10	0.24	0.13	4.30	4.04
Steam Table Enthalpy (kJ/kg)[A]	1,773.16	-337.48	-8,206.86	1,045.47	945.35	422.74	32.40	62.75	106.49	367.84	42.95	108.14
AspenPlus Enthalpy (kJ/kg)[B]	-9,190.08	-13,663.69	-8,526.27	-9,086.51	-14,939.42	-15,357.96	-7,990.44	-15,905.25	-15,746.95	-15,598.25	-7,992.79	-3,270.47
Density (kg/m^3)	24.0	1,532.5	1,791.5	23.2	836.1	936.3	35.8	999.4	990.9	966.1	34.0	8.0
V-L Molecular Weight	19.073	24.842	90.073	19.247	18.088	18.016	19.711	18.019	18.030	18.015	19.902	4.902
V-L Flowrate (lb_{mol}/hr)	100,031	69	1	85,395	14,706	32,813	60,272	7,905	3,785	10,834	60,964	37,230
V-L Flowrate (lb/hr)	1,907,893	1,706	55	1,643,610	265,989	591,173	1,188,017	142,443	68,252	195,183	1,213,284	182,487
Solids Flowrate (lb/hr)	0	0	0	0	0	0	0	0	0	0	0	0
Temperature (°F)	549	61	59	437	432	226	83	59	85	191	98	65
Pressure (psia)	809.3	929.3	18.2	709.0	788.3	65.0	645.4	14.7	35.0	19.1	623.7	586.5
Steam Table Enthalpy (Btu/lb)[A]	762.3	-145.1	-3,528.3	449.5	406.4	181.7	13.9	27.0	45.8	158.1	18.5	46.5
AspenPlus Enthalpy (Btu/lb)[B]	-3,951.0	-5,874.3	-3,665.6	-3,906.5	-6,422.8	-6,602.7	-3,435.3	-6,838.0	-6,770.0	-6,706.0	-3,436.3	-1,406.0
Density (lb/ft^3)	1.496	95.673	111.841	1.447	52.194	58.453	2.236	62.391	61.858	60.312	2.125	0.502

[A]Steam table reference conditions are 32.02°F & 0.089 psia

[B]Aspen thermodynamic reference state is the component's constituent elements in an ideal gas state at 25°C and 1 atm

Exhibit 3-122. Case B5B-Q stream table, GEP quench-only IGCC with capture (continued)

	25	26	27	28	29	30	31	32	33	34	35	36
V-L Mole Fraction												
Ar	0.0001	0.0083	0.0000	0.0000	0.0008	0.0112	0.0112	0.0092	0.0088	0.0000	0.0090	0.0001
CH_4	0.0001	0.0000	0.0000	0.0000	0.0001	0.0014	0.0014	0.0000	0.0000	0.0000	0.0000	0.0002
CO	0.0008	0.0049	0.0000	0.0000	0.0090	0.0337	0.0337	0.0000	0.0000	0.0000	0.0000	0.0009
CO_2	0.5129	0.7967	0.0000	0.0000	0.5636	0.0305	0.0305	0.0003	0.0083	0.0000	0.0083	0.9853
COS	0.0006	0.0000	0.0000	0.0000	0.0000	0.0000	0.0000	0.0000	0.0000	0.0000	0.0000	0.0000
H_2	0.0117	0.1676	0.0000	0.0000	0.0650	0.9122	0.9122	0.0000	0.0000	0.0000	0.0000	0.0103
H_2O	0.0161	0.0020	0.0000	1.0000	0.2841	0.0001	0.0001	0.0099	0.1197	1.0000	0.1201	0.0031
HCl	0.0000	0.0000	0.0000	0.0000	0.0000	0.0000	0.0000	0.0000	0.0000	0.0000	0.0000	0.0000
H_2S	0.4571	0.0074	0.0000	0.0000	0.0231	0.0000	0.0000	0.0000	0.0000	0.0000	0.0000	0.0000
N_2	0.0000	0.0131	0.0000	0.0000	0.0005	0.0109	0.0109	0.7732	0.7554	0.0000	0.7556	0.0001
NH_3	0.0006	0.0000	0.0000	0.0000	0.0538	0.0000	0.0000	0.0000	0.0000	0.0000	0.0000	0.0000
O_2	0.0000	0.0000	0.0000	0.0000	0.0000	0.0000	0.0000	0.2074	0.1078	0.0000	0.1070	0.0000
SO_2	0.0000	0.0000	0.0000	0.0000	0.0000	0.0000	0.0000	0.0000	0.0000	0.0000	0.0000	0.0000
NaCl	0.0000	0.0000	0.0000	0.0000	0.0000	0.0000	0.0000	0.0000	0.0000	0.0000	0.0000	0.0000
NaOH	0.0000	0.0000	0.0000	0.0000	0.0000	0.0000	0.0000	0.0000	0.0000	0.0000	0.0000	0.0000
Total	1.0000	1.0000	0.0000	1.0000	1.0000	1.0000	1.0000	1.0000	1.0000	1.0000	1.0000	1.0000
V-L Flowrate (kg_{mol}/hr)	374	314	0	173	103	16,887	16,887	110,253	138,169	20,504	139,301	7,577
V-L Flowrate (kg/hr)	14,408	11,461	0	3,117	3,316	82,775	82,775	3,181,556	3,797,300	369,377	3,827,810	329,389
Solids Flowrate (kg/hr)	0	0	5,489	0	0	0	0	0	0	0	0	0
Temperature (°C)	27	38	183	50	108	241	217	15	566	535	129	-3
Pressure (MPa, abs)	0.18	4.30	0.12	0.11	0.45	3.88	3.17	0.10	0.10	12.51	0.10	0.55
Steam Table Enthalpy (kJ/kg)[A]	41.02	4.15	---	109.31	513.76	1,453.30	1,305.68	30.23	834.13	3,436.62	336.95	-5.69
AspenPlus Enthalpy (kJ/kg)[B]	-5,588.29	-8,638.11	146.72	-15,860.47	-9,097.64	-1,925.31	-2,072.93	-97.58	-561.13	-12,543.67	-1,062.90	-8,968.76
Density (kg/m^3)	2.9	70.6	5,268.5	964.1	4.6	4.4	3.8	1.2	0.4	36.6	0.8	11.1
V-L Molecular Weight	38.540	36.526	---	18.016	32.057	4.902	4.902	28.857	27.483	18.015	27.479	43.474
V-L Flowrate (lb_{mol}/hr)	824	692	0	381	228	37,230	37,230	243,065	304,611	45,203	307,106	16,704
V-L Flowrate (lb/hr)	31,763	25,266	0	6,873	7,310	182,487	182,487	7,014,130	8,371,613	814,337	8,438,876	726,177
Solids Flowrate (lb/hr)	0	0	12,102	0	0	0	0	0	0	0	0	0
Temperature (°F)	80	100	362	121	226	465	422	59	1,051	996	265	26
Pressure (psia)	26.7	623.7	17.1	16.2	65.0	563.3	460.0	14.7	15.1	1,814.7	14.8	80.0
Steam Table Enthalpy (Btu/lb)[A]	17.6	1.8	---	47.0	220.9	624.8	561.3	13.0	358.6	1,477.5	144.9	-2.4
AspenPlus Enthalpy (Btu/lb)[B]	-2,402.5	-3,713.7	63.1	-6,818.8	-3,911.3	-827.7	-891.2	-42.0	-241.2	-5,392.8	-457.0	-3,855.9
Density (lb/ft^3)	0.180	4.409	328.904	60.186	0.288	0.275	0.236	0.076	0.026	2.288	0.052	0.696

[A]Steam table reference conditions are 32.02°F & 0.089 psia

[B]Aspen thermodynamic reference state is the component's constituent elements in an ideal gas state at 25°C and 1 atm

Exhibit 3-122. Case B5B-Q stream table, GEP quench-only IGCC with capture (continued)

	37	38	39	40	41
V-L Mole Fraction					
Ar	0.0000	0.0000	0.0000	0.0000	0.0000
CH_4	0.0001	0.0002	0.0002	0.0000	0.0002
CO	0.0001	0.0007	0.0007	0.0000	0.0007
CO_2	0.9985	0.9889	0.9908	0.0500	0.9908
COS	0.0000	0.0000	0.0000	0.0000	0.0000
H_2	0.0008	0.0077	0.0077	0.0000	0.0077
H_2O	0.0005	0.0024	0.0005	0.9500	0.0005
HCl	0.0000	0.0000	0.0000	0.0000	0.0000
H_2S	0.0000	0.0000	0.0000	0.0000	0.0000
N_2	0.0000	0.0000	0.0000	0.0000	0.0000
NH_3	0.0000	0.0000	0.0000	0.0000	0.0000
O_2	0.0000	0.0000	0.0000	0.0000	0.0000
SO_2	0.0000	0.0000	0.0000	0.0000	0.0000
NaCl	0.0000	0.0000	0.0000	0.0000	0.0000
NaOH	0.0000	0.0000	0.0000	0.0000	0.0000
Total	1.0000	1.0000	1.0000	1.0000	1.0000
V-L Flowrate (kg_{mol}/hr)	2,815	10,392	10,371	21	10,371
V-L Flowrate (kg/hr)	123,765	453,154	452,749	405	452,749
Solids Flowrate (kg/hr)	0	0	0	0	0
Temperature (°C)	-11	29	29	29	30
Pressure (MPa, abs)	0.12	2.50	2.39	2.50	15.27
Steam Table Enthalpy (kJ/kg)[A]	-9.81	1.28	0.53	138.13	-226.97
AspenPlus Enthalpy (kJ/kg)[B]	-8,972.37	-8,961.74	-8,956.76	-15,225.03	-9,184.27
Density (kg/m³)	2.3	49.8	47.2	319.0	838.2
V-L Molecular Weight	43.960	43.606	43.655	19.315	43.655
V-L Flowrate (lb_{mol}/hr)	6,207	22,910	22,864	46	22,864
V-L Flowrate (lb/hr)	272,856	999,034	998,140	893	998,140
Solids Flowrate (lb/hr)	0	0	0	0	0
Temperature (°F)	12	85	85	85	86
Pressure (psia)	16.7	363.0	346.5	363.0	2,214.7
Steam Table Enthalpy (Btu/lb)[A]	-4.2	0.6	0.2	59.4	-97.6
AspenPlus Enthalpy (Btu/lb)[B]	-3,857.4	-3,852.9	-3,850.7	-6,545.6	-3,948.5
Density (lb/ft³)	0.146	3.109	2.948	19.917	52.328

[A]Steam table reference conditions are 32.02°F & 0.089 psia
[B]Aspen thermodynamic reference state is the component's constituent elements in an ideal gas state at 25°C and 1 atm

3.4.12.3 Syngas Scrubber

Due to the extremely high moisture content of the syngas entering the syngas scrubber (56 vol% versus 39 vol% in Case B5B), no additional process water or ZLD condensate is required beyond the scrubber effluent recycle. Rather, the scrubber effluent recycle rate is controlled to maintain the HCl removal rate at 96 percent. The resulting chloride concentration of the blowdown (stream 17) is 2,770 ppmw.

The recycled scrubber effluent is first cooled to 44°C (112°F) by preheating IP steam generator FW and syngas prior to the CT, before being further cooled to 21°C (70°F) by cooling water and injected into the scrubber.

All other aspects of the syngas scrubber are identical to those described for Case B5B.

3.4.12.4 Water Gas Shift

The WGS process was described in Section 3.1.3. Due to the extremely high moisture content of the syngas entering the WGS (48 vol% versus 34 vol% in Case B5B), no additional moisture is required and the steam to dry gas ratio goal of 0.25 is exceeded (actual ratio is 0.43).

As with Case B5B, two stages total are used to convert 93.0 percent of the CO in the syngas to CO_2. The heat generated from the first reactor is used to produce 113,615 kg/hr (250,477 lb/hr) IP steam at 5.4 MPa (788 psia), which is sent to the steam cycle for use while cooling the syngas to 253°C (487°F) prior to entering the second stage. Prior to the syngas being sent to the LTHR system (stream 16), the warm syngas from the second stage of WGS is cooled to 225°C (437°F) by preheating the FW to the IP steam generator.

The WGS catalyst also serves to hydrolyze COS thus eliminating the need for a separate COS hydrolysis reactor.

3.4.12.5 Low Temperature Heat Recovery

Case B5B-Q only differs from Case B5B in that the second stage of the LTHR system does not provide any heat to the WGS steam generator, as this case does not require any additional steam for WGS operation.

3.4.12.6 Ammonia Wash

No differences from Case B5B.

3.4.12.7 Process Water Treatment

No differences from Case B5B.

3.4.12.8 Mercury Removal and AGR

No differences from Case B5B.

3.4.12.9 Claus Unit

No differences from Case B5B.

3.4.12.10 Power Block

No differences from Case B5B.

3.4.12.11 Air Separation Unit

No differences from Case B5B.

3.4.13 Case B5B-Q – Performance Results

The plant produces a net output of 499 MW at a net plant efficiency of 30.2 percent (HHV basis). Overall performance for the entire plant is summarized in Exhibit 3-123 and Exhibit 3-124, which includes auxiliary power requirements. The ASU accounts for 62 percent of

the auxiliary load between the MAC, N_2 compressor, O_2 compressor, and ASU auxiliaries. The two-stage Selexol process and CO_2 compression account for an additional 23 percent of the auxiliary power load. The BFW pumps and cooling water system (circulating water pumps and cooling tower fan) compose about 6 percent of the load, with all other systems together constituting the remaining 9 percent of the auxiliary load.

Exhibit 3-123. Case B5B-Q plant performance summary

Performance Summary	
Combustion Turbine Power, MWe	464
Sweet Gas Expander Power, MWe	3
Steam Turbine Power, MWe	217
Total Gross Power, MWe	**685**
Air Separation Unit Main Air Compressor, kWe	71,370
Air Separation Unit Booster Compressor, kWe	5,610
N_2 Compressors, kWe	36,570
CO_2 Compression, kWe	31,690
Acid Gas Removal, kWe	11,550
Balance of Plant, kWe	28,790
Total Auxiliaries, MWe	**186**
Net Power, MWe	**499**
HHV Net Plant Efficiency, %	30.2%
HHV Net Plant Heat Rate, kJ/kWh (Btu/kWh)	11,909 (11,287)
HHV Cold Gas Efficiency, %	79.0%
HHV Combustion Turbine Efficiency, %	36.4%
LHV Net Plant Efficiency, %	31.3%
LHV Net Plant Heat Rate, kJ/kWh (Btu/kWh)	11,486 (10,887)
LHV Cold Gas Efficiency, %	75.6%
LHV Combustion Turbine Efficiency, %	42.8%
Steam Turbine Cycle Efficiency, %	38.5%
Steam Turbine Heat Rate, kJ/kWh (Btu/kWh)	9,343 (8,855)
Condenser Duty, GJ/hr (MMBtu/hr)	1,453 (1,377)
AGR Cooling Duty, GJ/hr (MMBtu/hr)	147 (140)
As-Received Coal Feed, kg/hr (lb/hr)	219,048 (482,918)
HHV Thermal Input, kWt	1,651,082
LHV Thermal Input, kWt	1,592,489
Raw Water Withdrawal, $(m^3/min)/MW_{net}$ (gpm/MW_{net})	0.048 (12.6)
Raw Water Consumption, $(m^3/min)/MW_{net}$ (gpm/MW_{net})	0.038 (10.2)
O_2:As-Received Coal	0.760

Exhibit 3-124. Case B5B-Q plant power summary

Power Summary	
Combustion Turbine Power, MWe	464
Sweet Gas Expander Power, MWe	3
Steam Turbine Power, MWe	217
Total Gross Power, MWe	**685**
Auxiliary Load Summary	
Acid Gas Removal, kWe	11,550
Air Separation Unit Auxiliaries, kWe	1,000
Air Separation Unit Main Air Compressor, kWe	71,370
Air Separation Unit Booster Compressor, kWe	5,610
Ammonia Wash Pumps, kWe	100
Circulating Water Pumps, kWe	5,260
Claus Plant TG Recycle Compressor, kWe	1,160
Claus Plant/TGTU Auxiliaries, kWe	250
CO_2 Compression, kWe	31,690
Coal Dryer Air Compressor, kWe	0
Coal Handling, kWe	470
Coal Milling, kWe	2,250
Combustion Turbine Auxiliaries, kWe	1,000
Condensate Pumps, kWe	220
Cooling Tower Fans, kWe	2,720
Feedwater Pumps, kWe	2,540
Gasifier Water Pump, kWe	0
Ground Water Pumps, kWe	570
Miscellaneous Balance of Plant[A], kWe	3,000
N_2 Compressors, kWe	36,570
N_2 Humidification Pump, kWe	0
O_2 Pump, kWe	480
Quench Water Pump, kWe	960
Shift Steam Pump, kWe	220
Slag Handling, kWe	1,150
Slag Reclaim Water Recycle Pump, kWe	0
Slurry Water Pump, kWe	190

Power Summary	
Auxiliary Load Summary	
Sour Gas Compressors, kWe	0
Sour Water Recycle Pumps, kWe	30
Steam Turbine Auxiliaries, kWe	200
Syngas Recycle Compressor, kWe	0
Syngas Scrubber Pumps, kWe	250
Process Water Treatment Auxiliaries, kWe	2,070
Transformer Losses, kWe	2,700
Total Auxiliaries, MWe	**186**
Net Power, MWe	**499**

[A]Includes plant control systems, lighting, HVAC, and miscellaneous low voltage loads

3.4.13.1 Environmental Performance

The environmental targets for emissions of Hg, HCl, NOx, SO_2, and PM were presented in Section 2.4. A summary of the plant air emissions for Case B5B-Q is presented in Exhibit 3-125.

Exhibit 3-125. Case B5B-Q air emissions

	kg/GJ (lb/MMBtu)	Tonne/year (ton/year)[A]	kg/MWh (lb/MWh)[B]
SO_2	0.000 (0.000)	0 (0)	0.000 (0.000)
NOx	0.021 (0.048)	858 (946)	0.179 (0.394)
Particulate	0.003 (0.007)	127 (140)	0.026 (0.058)
Hg	1.57E-7 (3.65E-7)	0.007 (0.007)	1.36E-6 (3.00E-6)
HCl	0.000 (0.000)	0.00 (0.00)	0.000 (0.000)
CO_2	9 (20)	355,497 (391,868)	74 (163)
CO_2[C]	-	-	102 (224)

[A]Calculations based on an 80 percent capacity factor
[B]Emissions based on gross power except where otherwise noted
[C]CO_2 emissions based on net power instead of gross power

The low level of SO_2 emissions is achieved by capturing the sulfur in the gas by the two-stage Selexol AGR process. As a result of achieving the 90 percent CO_2 removal target, the sulfur compounds are removed to an extent that exceeds the environmental target in Section 2.4. The clean syngas exiting the AGR process has a sulfur concentration of approximately 5 ppmv. This results in a concentration in the flue gas of less than less than 1 ppmv. The H_2S-rich regeneration gas from the AGR system is fed to a Claus plant, producing elemental sulfur. The Claus plant tail gas is hydrogenated to convert all sulfur species to H_2S and then recycled back to the Selexol process, thereby eliminating the need for a TGTU.

NOx emissions are limited by N_2 dilution to 15 ppmvd (as NO at 15 percent O_2). NH_3 in the syngas is removed with process condensate prior to the low-temperature AGR process. This helps lower NOx levels as well.

Particulate discharge to the atmosphere is limited to extremely low values by the use of the syngas quench in addition to the syngas scrubber and the gas washing effect of the AGR absorber. The particulate emissions represent filterable particulate only.

Approximately 97 percent of the mercury is captured from the syngas by dual activated carbon beds.

Ninety-two percent of the CO_2 from the syngas is captured in the AGR system and compressed for sequestration. Because not all CO is converted to CO_2 in the shift reactors, the overall carbon removal is 90 percent.

The carbon balance for the plant is shown in Exhibit 3-126. The carbon input to the plant consists of carbon in the air in addition to carbon in the coal. Carbon leaves the plant as unburned carbon in the slag and the captured CO_2 product, and as CO_2 in the stack gas (includes the ASU vent gas). The carbon capture efficiency is defined as one minus the amount of carbon in the stack gas relative to the total carbon in less carbon contained in the slag, represented by the following fraction:

$$\left(1-\left(\frac{Carbon\ in\ Stack}{(Total\ Carbon\ In)-(Carbon\ in\ Slag)}\right)\right)*100=\left(1-\left(\frac{30{,}521}{309{,}012-6{,}157}\right)*\right)100=90\%$$

Exhibit 3-126. Case B5B-Q carbon balance

Carbon In		Carbon Out	
	kg/hr (lb/hr)		kg/hr (lb/hr)
Coal	139,632 (307,835)	Stack Gas	13,844 (30,521)
Air (CO_2)	534 (1,177)	CO_2 Product	123,528 (272,334)
		Slag	2,793 (6,157)
Total	**140,165 (309,012)**	**Total**	**140,165 (309,012)**

Exhibit 3-127 shows the sulfur balance for the plant. Sulfur input comes solely from the sulfur in the coal. Sulfur output includes the sulfur recovered in the Claus plant and sulfur in the CO_2 product. Sulfur in the slag is considered to be negligible.

Exhibit 3-127. Case B5B-Q sulfur balance

Sulfur In		Sulfur Out	
	kg/hr (lb/hr)		kg/hr (lb/hr)
Coal	5,490 (12,104)	Stack Gas	–
		CO_2 Product	1 (2)
		Elemental Sulfur	5,489 (12,102)
Total	**5,490 (12,104)**	**Total**	**5,490 (12,104)**

Exhibit 3-128 shows the overall water balance for the plant. The exhibit is presented in an identical manner as for cases B1A through B5B.

Exhibit 3-128. Case B5B-Q water balance

Water Use	Water Demand	Internal Recycle	Raw Water Withdrawal	Process Water Discharge	Raw Water Consumption
	m^3/min (gpm)	m^3/min (gpm)	m^3/min (gpm)	m^3/min (gpm)	m^3/min (gpm)
Slag Handling	0.52 (138)	0.52 (138)	–	–	–
Slurry Water	1.50 (397)	1.50 (397)	–	–	–
Gasifier Water	–	–	–	–	–
Quench	6.75 (1,782)	4.50 (1,189)	2.25 (593)	–	2.25 (593)
HCl Scrubber	6.34 (1,674)	6.34 (1,674)	–	–	–
NH_3 Scrubber	1.08 (285)	0.00 (0)	1.08 (285)	–	1.08 (285)
Gasifier Steam	–	–	–	–	–
Condenser Makeup	**0.18 (47)**	**–**	**0.18 (47)**	**–**	**0.18 (47)**
BFW Makeup	0.18 (47)	–	0.18 (47)	–	0.18 (47)
Gasifier Steam	–	–	–	–	–
Shift Steam	–	–	–	–	–
N_2 Humidification	–	–	–	–	–
Cooling Tower	**20.49 (5,414)**	**0.20 (53)**	**20.29 (5,361)**	**4.61 (1,218)**	**15.68 (4,143)**
BFW Blowdown	–	0.18 (47)	-0.18 (-47)	–	-0.18 (-47)
ASU Knockout	–	0.02 (6)	-0.02 (-6)	–	-0.02 (-6)
Total	**36.85 (9,736)**	**13.06 (3,450)**	**23.79 (6,286)**	**4.61 (1,218)**	**19.19 (5,068)**

An overall plant energy balance is provided in tabular form in Exhibit 3-129. The power out is the combined CT, steam turbine, and sweet gas expander power prior to generator losses. The power at the generator terminals (shown in Exhibit 3-132) is calculated by multiplying the power out by a combined generator efficiency of 98.5 percent.

Exhibit 3-129. Case B5B-Q overall energy balance (0°C [32°F] reference)

	HHV	Sensible + Latent	Power	Total
Heat In, MMBtu/hr (GJ/hr)				
Coal	5,944 (5,634)	5.0 (4.7)	–	5,949 (5,638)
Air	–	118.6 (112.4)	–	118.6 (112.4)
Raw Water Makeup	–	89.5 (84.8)	–	89.5 (84.8)
Auxiliary Power	–	–	668.1 (633.2)	668.1 (633.2)
TOTAL	**5,944 (5,634)**	**213.1 (201.9)**	**668.1 (633.2)**	**6,825 (6,469)**
Heat Out, MMBtu/hr (GJ/hr)				
Misc. Process Steam	–	4.8 (4.6)	–	4.8 (4.6)
Slag	91.6 (86.8)	37.5 (35.6)	–	129.1 (122.3)
Stack Gas	–	1,290 (1,222)	–	1,290 (1,222)
Sulfur	50.9 (48.2)	0.6 (0.6)	–	51.5 (48.8)
Motor Losses and Design Allowances	–	–	55.1 (52.2)	55.1 (52.2)
Cooling Tower Load[A]	–	2,676 (2,536)	–	2,676 (2,536)
CO_2 Product Stream	–	-102.8 (-97.4)	–	-102.8 (-97.4)
Blowdown Streams	–	40.7 (38.5)	–	40.7 (38.5)
Ambient Losses[B]	–	143.9 (136.4)	–	143.9 (136.4)
Power	–	–	2,465 (2,336)	2,465 (2,336)
TOTAL	**142.4 (135.0)**	**4,090 (3,877)**	**2,520 (2,388)**	**6,753 (6,400)**
Unaccounted Energy[C]	–	72.3 (68.5)	–	72.3 (68.5)

[A]Includes condenser, AGR, and miscellaneous cooling loads
[B]Ambient losses include all losses to the environment through radiation, convection, etc. Sources of these losses include the combustor, reheater, superheater, and transformers
[C]By difference

3.4.13.2 Energy and Mass Balance Diagrams

Energy and mass balance diagrams are shown for the following subsystems in Exhibit 3-130 through Exhibit 3-132:

- Coal gasification and ASU
- Syngas cleanup, sulfur recovery, and tail gas recycle
- Combined cycle power generation, steam, and FW

This page intentionally left blank

Exhibit 3-130. Case B5B-Q coal gasification and ASU energy and mass balance

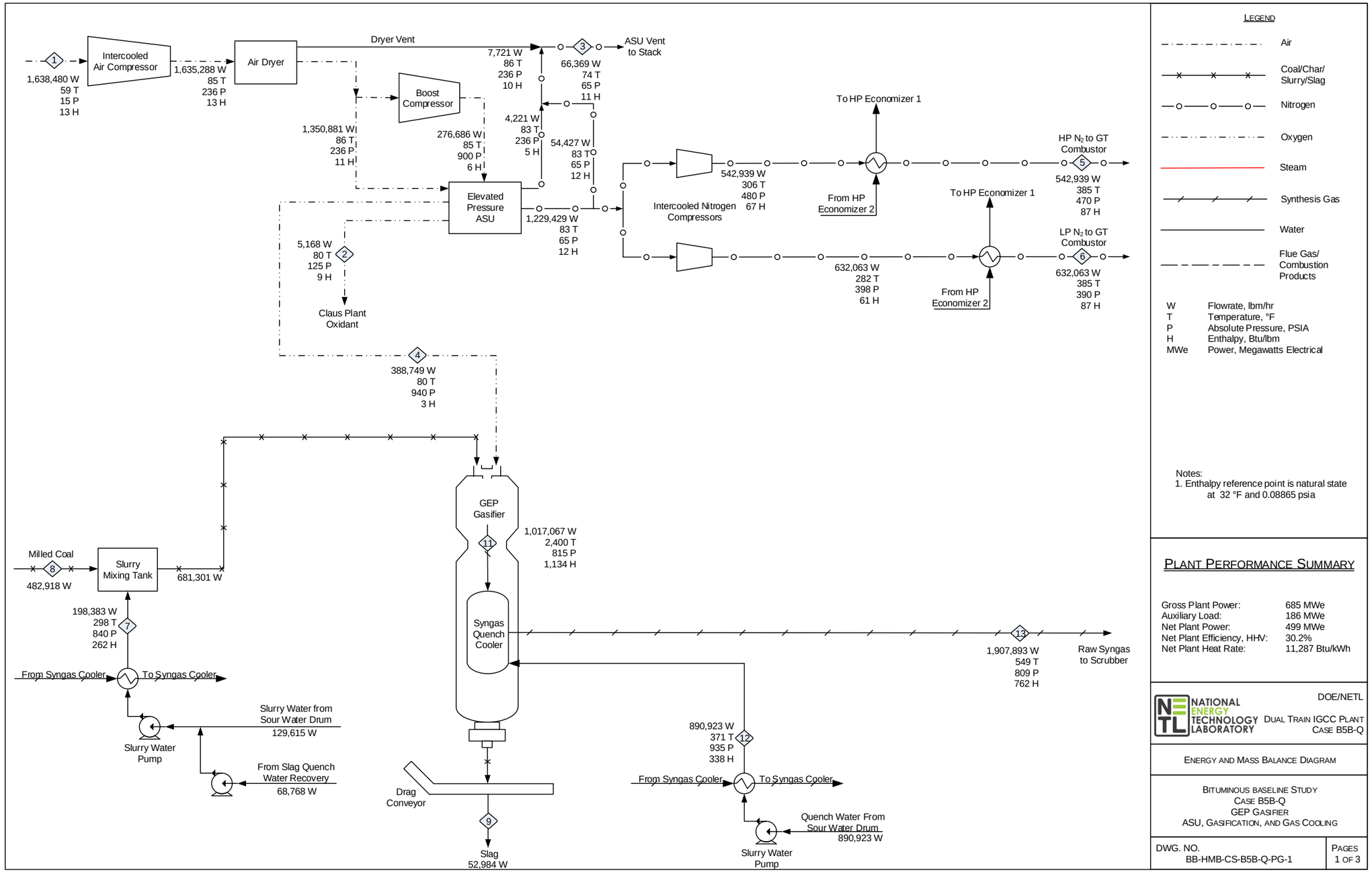

Exhibit 3-131. Case B5B-Q syngas cleanup energy and mass balance

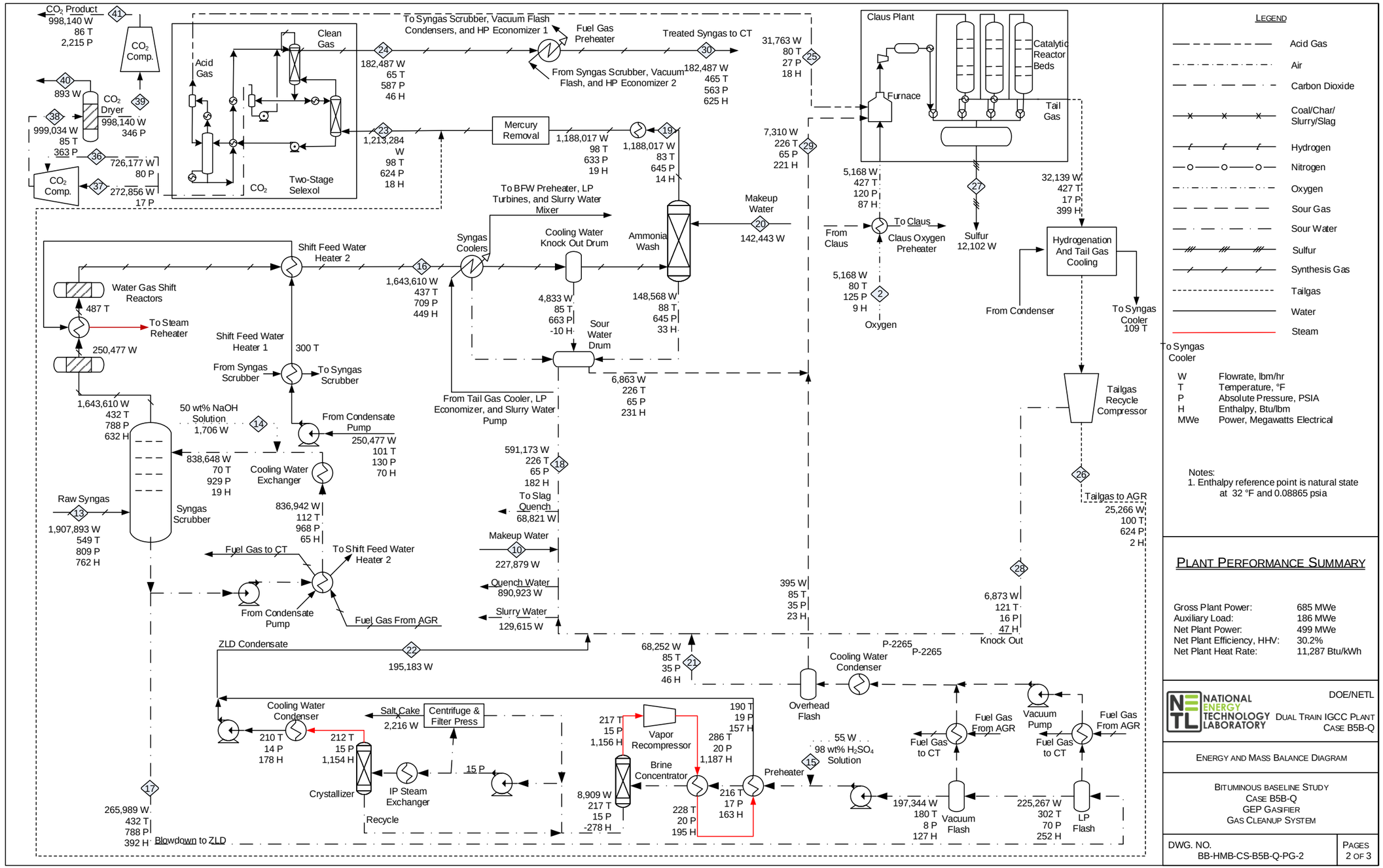

Exhibit 3-132. Case B5B-Q combined cycle power generation energy and mass balance

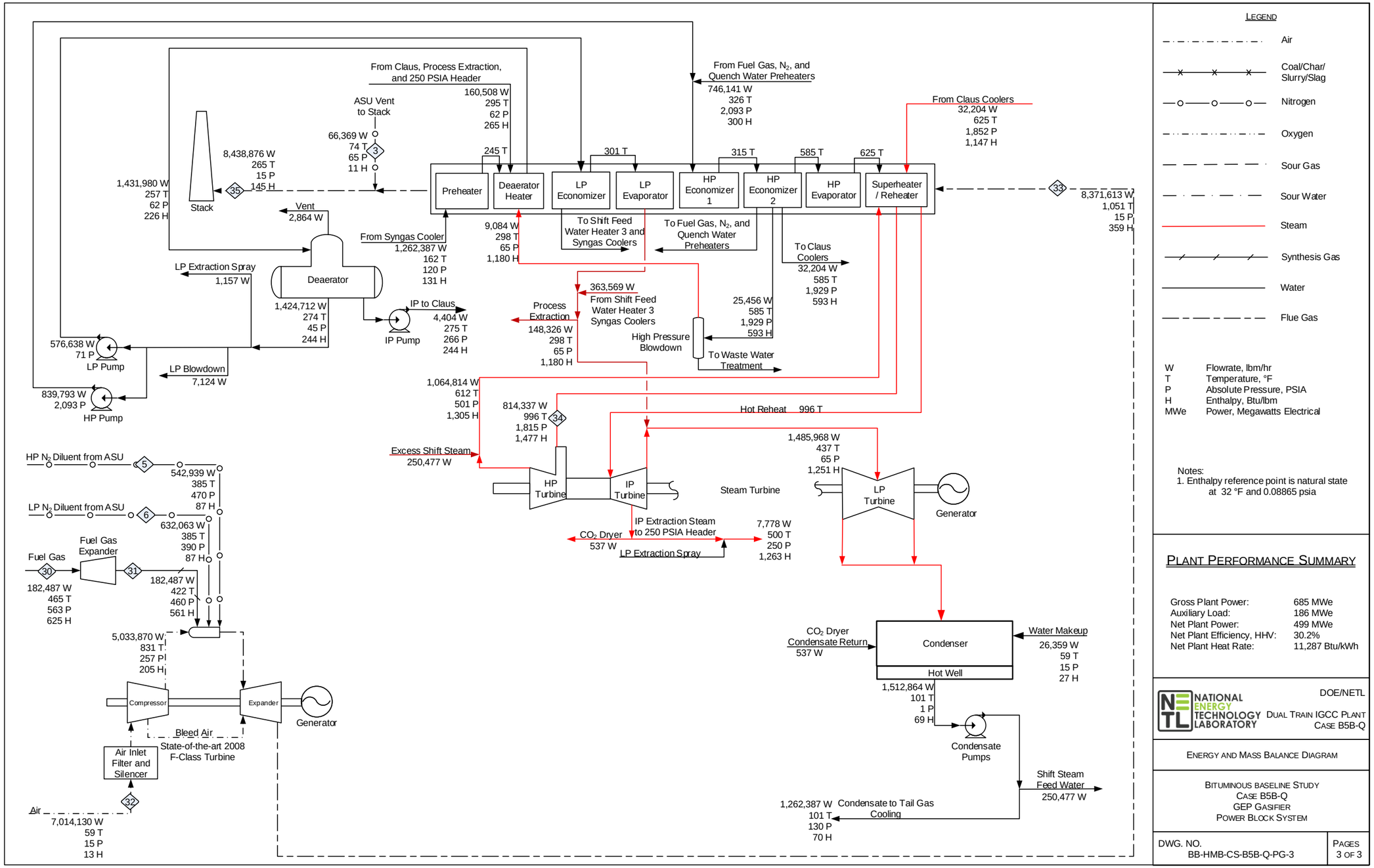

This page intentionally left blank

3.4.14 Case B5B-Q – Major Equipment List

Major equipment items for the GEP quench-only gasifier with CO_2 capture are shown in the following tables. In general, the design conditions include a 10 percent design allowance for flows and heat duties and a 21 percent design allowance for heads on pumps and fans.

Case B5B-Q – Account 1: Coal Handling

Equipment No.	Description	Type	Design Condition	Operating Qty.	Spares
1	Bottom Trestle Dumper and Receiving Hoppers	N/A	181 tonne (200 ton)	2	0
2	Feeder	Belt	570 tonne/hr (630 tph)	2	0
3	Conveyor No. 1	Belt	1,130 tonne/hr (1,250 tph)	1	0
4	Conveyor No. 2	Belt	1,130 tonne/hr (1,250 tph)	1	0
5	Stacker/Reclaimer	Traveling, linear	1,130 tonne/hr (1,250 tph)	1	0
6	Reclaim Hopper	N/A	50 tonne (50 ton)	2	1
7	Feeder	Vibratory	180 tonne/hr (200 tph)	2	1
8	Conveyor No. 3	Belt w/ tripper	360 tonne/hr (400 tph)	1	0
9	Coal Surge Bin w/ Vent Filter	Dual outlet	180 tonne (200 ton)	2	0
10	Crusher	Impactor reduction	8 cm x 0 - 3 cm x 0 (3" x 0 - 1-1/4" x 0)	2	0
11	Conveyor No. 4	Belt w/tripper	360 tonne/hr (400 tph)	1	0
12	Conveyor No. 5	Belt w/ tripper	360 tonne/hr (400 tph)	1	0
13	Coal Silo w/ Vent Filter and Slide Gates	Field erected	800 tonne (890 ton)	3	0

Case B5B-Q – Account 2: Coal Preparation and Feed

Equipment No.	Description	Type	Design Condition	Operating Qty.	Spares
1	Feeder	Vibratory	80 tonne/hr (90 tph)	3	0
2	Conveyor No. 6	Belt w/tripper	240 tonne/hr (270 tph)	1	0
3	Rod Mill Feed Hopper	Dual Outlet	480 tonne (530 ton)	1	0
4	Weigh Feeder	Belt	120 tonne/hr (130 tph)	2	0
5	Rod Mill	Rotary	120 tonne/hr (130 tph)	2	0
6	Slurry Water Storage Tank with Agitator	Field erected	297,380 liters (78,560 gal)	2	0
7	Slurry Water Pumps	Centrifugal	830 lpm (220 gpm)	2	1
8	Trommel Screen	Coarse	170 tonne/hr (190 tph)	2	0
9	Rod Mill Discharge Tank with Agitator	Field erected	389,020 liters (102,770 gal)	2	0
10	Rod Mill Product Pumps	Centrifugal	3,200 lpm (900 gpm)	2	2
11	Slurry Storage Tank with Agitator	Field erected	1,167,100 liters (308,300 gal)	2	0
12	Slurry Recycle Pumps	Centrifugal	6,500 lpm (1,700 gpm)	2	2
13	Slurry Product Pumps	Positive displacement	3,200 lpm (900 gpm)	2	2

Case B5B-Q – Account 3: Feedwater and Miscellaneous Balance of Plant Systems

Equipment No.	Description	Type	Design Condition	Operating Qty.	Spares
1	Demineralized Water Storage Tank	Vertical, cylindrical, outdoor	790,000 liters (209,000 gal)	2	0

Equipment No.	Description	Type	Design Condition	Operating Qty.	Spares
2	Condensate Pumps	Vertical canned	6,330 lpm @ 90 m H_2O (1,670 gpm @ 300 ft H_2O)	2	1
3	Deaerator (integral w/ HRSG)	Horizontal spray type	357,000 kg/hr (788,000 lb/hr)	2	0
4	Intermediate Pressure Feedwater Pump	Horizontal centrifugal, single stage	2,490 lpm @ 20 m H_2O (660 gpm @ 70 ft H_2O)	2	1
5	High Pressure Feedwater Pump No. 1	Barrel type, multi-stage, centrifugal	HP water: 3,630 lpm @ 1,700 m H_2O (960 gpm @ 5,700 ft H_2O)	2	1
6	High Pressure Feedwater Pump No. 2	Barrel type, multi-stage, centrifugal	IP water: 3,230 lpm @ 210 m H_2O (850 gpm @ 670 ft H_2O)	2	1
7	Auxiliary Boiler	Shop fabricated, water tube	18,000 kg/hr, 2.8 MPa, 343°C (40,000 lb/hr, 400 psig, 650°F)	1	0
8	Service Air Compressors	Flooded Screw	28 m^3/min @ 0.7 MPa (1,000 scfm @ 100 psig)	2	1
9	Instrument Air Dryers	Duplex, regenerative	28 m^3/min (1,000 scfm)	2	1
10	Closed Cycle Cooling Heat Exchangers	Plate and frame	592 GJ/hr (561 MMBtu/hr) each	2	0
11	Closed Cycle Cooling Water Pumps	Horizontal centrifugal	212,300 lpm @ 20 m H_2O (56,100 gpm @ 70 ft H_2O)	2	1
12	Engine-Driven Fire Pump	Vertical turbine, diesel engine	3,785 lpm @ 110 m H_2O (1,000 gpm @ 350 ft H_2O)	1	1
13	Fire Service Booster Pump	Two-stage horizontal centrifugal	2,650 lpm @ 80 m H_2O (700 gpm @ 250 ft H_2O)	1	1
14	Municipal Water Pumps	Stainless steel, single suction	2,890 lpm @ 20 m H_2O (760 gpm @ 60 ft H_2O)	2	1
15	Ground Water Pumps	Stainless steel, single suction	2,890 lpm @ 270 m H_2O (760 gpm @ 880 ft H_2O)	2	1
16	Filtered Water Pumps	Stainless steel, single suction	1,710 lpm @ 50 m H_2O (450 gpm @ 160 ft H_2O)	2	1
17	Filtered Water Tank	Vertical, cylindrical	819,000 liter (216,000 gal)	2	0
18	Makeup Water Demineralizer	Anion, cation, and mixed bed	170 lpm (40 gpm)	2	0
19	Liquid Waste Treatment System	N/A	10 years, 24-hour storm	1	0
20	Process Water Treatment	Vacuum flash, brine concentrator, and crystallizer	Vacuum Flash - Inlet: 66,000 kg/hr (146,000 lb/hr) Outlet: 3,634 ppmw Cl- Brine Concentrator Inlet - 49,000 kg/hr (109,000 lb/hr) Crystallizer Inlet - 2,000 kg/hr (5,000 lb/hr)	2	0

Case B5B-Q – Account 4: Gasifier, ASU, and Accessories

Equipment No.	Description	Type	Design Condition	Operating Qty.	Spares
1	Gasifier	Pressurized slurry-feed, entrained bed	2,900 tonne/day, 5.6 MPa (3,200 tpd, 815 psia)	2	0
2	Synthesis Gas Cooler	Vertical downflow radiant heat exchanger with outlet quench chamber	254,000 kg/hr (559,000 lb/hr)	2	0
3	Synthesis Gas Cyclone	High efficiency	N/A	2	0
4	HCl Scrubber	Ejector Venturi	476,000 kg/hr (1,049,000 lb/hr)	2	0
5	Ammonia Wash	Counter-flow spray tower	298,000 kg/hr (657,000 lb/hr) @ 4.6 MPa (663 psia)	2	0

Equipment No.	Description	Type	Design Condition	Operating Qty.	Spares
6	Primary Sour Water Stripper	Counter-flow with external reboiler	N/A	2	0
7	Secondary Sour Water Stripper	Counter-flow with external reboiler	N/A	2	0
8	Low Temperature Heat Recovery Coolers	Shell and tube with condensate drain	410,000 kg/hr (904,000 lb/hr)	6	0
9	Low Temperature Heat Recovery Knockout Drum	Vertical with mist eliminator	299,000 kg/hr, 59°C, 4.6 MPa (659,000 lb/hr, 138°F, 667 psia)	2	0
10	Saturation Water Economizers	Shell and tube	N/A	4	0
11	HP Nitrogen Gas Saturator	Direct Injection	135,000 kg/hr, 196°C, 3.2 MPa (299,000 lb/hr, 385°F, 470 psia)	2	0
12	LP Nitrogen Gas Saturator	Direct Injection	158,000 kg/hr, 196°C, 2.7 MPa (348,000 lb/hr, 385°F, 390 psia)	2	0
13	Saturator Water Pump	Centrifugal	N/A	2	2
14	Saturated Nitrogen Reheaters	Shell and tube	N/A	4	0
15	Synthesis Gas Reheaters	Shell and tube	Reheater 1: 46,000 kg/hr (100,000 lb/hr) Reheater 2: N/A Reheater 3: N/A Reheater 4: N/A Reheater 5: 46,000 kg/hr (100,000 lb/hr) Reheater 6: 46,000 kg/hr (100,000 lb/hr)	2	0
16	Flare Stack	Self-supporting, carbon steel, stainless steel top, pilot ignition	410,000 kg/hr (904,000 lb/hr) syngas	2	0
17	ASU Main Air Compressor	Centrifugal, multi-stage	6,000 m^3/min @ 1.6 MPa (198,000 scfm @ 236 psia)	2	0
18	Cold Box	Vendor design	2,400 tonne/day (2,600 tpd) of 95% purity O_2	2	0
19	Gasifier O_2 Pump	Centrifugal, multi-stage	1,000 m^3/min (42,000 scfm) Suction - 1.0 MPa (130 psia) Discharge - 6.5 MPa (940 psia)	2	0
20	AGR Nitrogen Boost Compressor	Centrifugal, multi-stage	N/A	2	0
21	High Pressure Nitrogen Diluent Compressor	Centrifugal, multi-stage	2,000 m^3/min (67,000 scfm) Suction - 0.4 MPa (70 psia) Discharge - 3.3 MPa (480 psia)	2	0
22	Low Pressure Nitrogen Diluent Compressor	Centrifugal, single-stage	2,220 m^3/min (78,000 scfm) Suction - 0.4 MPa (70 psia) Discharge - 2.7 MPa (400 psia)	2	0
23	Gasifier Nitrogen Boost Compressor	Centrifugal, single-stage	N/A	2	0

Case B5B-Q – Account 5: Syngas Cleanup

Equipment No.	Description	Type	Design Condition	Operating Qty.	Spares
1	Mercury Adsorber 1	Sulfated carbon bed	296,000 kg/hr (653,000 lb/hr) 28°C (83°F) 4.5 MPa (645 psia)	2	0
2	Mercury Adsorber 2	Sulfated carbon bed	296,000 kg/hr (653,000 lb/hr) 37°C (98°F) 4.3 MPa (628 psia)	2	0
3	Sulfur Plant	Claus type	145 tonne/day (160 tpd)	1	0
4	WGS Reactors	Fixed bed, catalytic	205,000 kg/hr (452,000 lb/hr) 227°C (440°F) 5.4 MPa (790 psia)	4	0
5	Shift Reactor Heat Recovery Exchangers	Shell and Tube	Exchanger 1: 125 GJ/hr (118 MMBtu/hr) Exchanger 2: 100 GJ/hr (95 MMBtu/hr) Exchanger 3: 41 GJ/hr (39 MMBtu/hr) Exchanger 4: 50 GJ/hr (48 MMBtu/hr)	8	0
6	Acid Gas Removal Plant	Two-stage Selexol	605,000 kg/hr (1,335,000 lb/hr) 37°C (98°F) 4.3 MPa (624 psia)	1	0
7	Hydrogenation Reactor	Fixed bed, catalytic	16,000 kg/hr (35,000 lb/hr) 219°C (427°F) 0.1 MPa (16.7743276 psia)	1	0
8	Tail Gas Recycle Compressor	Centrifugal	13,000 kg/hr (28,000 lb/hr) each	1	0
9	Candle Filter	Pressurized filter with pulse-jet cleaning	N/A	2	0
10	CO_2 Dryer	Triethylene glycol	Inlet: 152 m^3/min @ 2.5 MPa (5,355 acfm @ 363 psia) Outlet: 2.4 MPa (346 psia Water Recovered: 405 kg/hr (893 lb/hr)	1	0
11	CO_2 Compressor	Integrally geared, multi-stage centrifugal	10 m^3/min @ 15.3 MPa (350 acfm @ 2,217 psia)	1	0
12	CO_2 Aftercooler	Shell and tube heat exchanger	Outlet: 15.3 MPa, 30°C (2,215 psia, 86°F) Duty: 78 MMkJ/hr (74 MMBtu/hr)	1	0

Case B5B-Q – Account 6: Combustion Turbine and Accessories

Equipment No.	Description	Type	Design Condition	Operating Qty.	Spares
1	Combustion Turbine	State-of-the-art 2008 F-Class	232 MW	2	0
2	Combustion Turbine Generator	TEWAC	260 MVA @ 0.9 p.f., 24 kV, 60 Hz, 3-phase	2	0

Case B5B-Q – Account 7: HRSG, Ductwork, and Stack

Equipment No.	Description	Type	Design Condition	Operating Qty.	Spares
1	Stack	CS plate, type 409SS liner	76 m (250 ft) high x 8.5 m (28 ft) diameter	1	0
2	Heat Recovery Steam Generator	Drum, multi-pressure with economizer section and integral deaerator	Main steam - 203,158 kg/hr, 12.4 MPa/535°C (447,885 lb/hr, 1,800 psig/996°F) Reheat steam - 265,646 kg/hr, 3.3 MPa/535°C (585,648 lb/hr, 477 psig/996°F)	2	0

Case B5B-Q – Account 8: Steam Turbine and Accessories

Equipment No.	Description	Type	Design Condition	Operating Qty.	Spares
1	Steam Turbine	Commercially available advanced steam turbine	229 MW 12.4 MPa/535°C/535°C (1,800 psig/ 996°F/996°F)	1	0
2	Steam Turbine Generator	Hydrogen cooled, static excitation	250 MVA @ 0.9 p.f., 24 kV, 60 Hz, 3-phase	1	0
3	Surface Condenser	Single pass, divided waterbox including vacuum pumps	1,600GJ/hr (1,510 MMBtu/hr), Inlet water temperature 16°C (60°F), Water temperature rise 11°C (20°F)	1	0
4	Steam Bypass	One per HRSG	50% steam flow @ design steam conditions	2	0

Case B5B-Q – Account 9: Cooling Water System

Equipment No.	Description	Type	Design Condition	Operating Qty.	Spares
1	Circulating Water Pumps	Vertical, wet pit	528,000 lpm @ 30 m (140,000 gpm @ 100 ft)	2	1
2	Cooling Tower	Evaporative, mechanical draft, multi-cell	11°C (51.5°F) wet bulb/ 16°C (60°F) CWT/27°C (80°F) HWT/ 2,940 GJ/hr (2,790 MMBtu/hr) heat duty	1	0

Case B5B-Q – Account 10: Slag Recovery and Handling

Equipment No.	Description	Type	Design Condition	Operating Qty.	Spares
1	Slag Quench Tank	Water bath	252,000 liters (67,000 gal)	2	0
2	Slag Crusher	Roll	13 tonne/hr (15 tph)	2	0
3	Slag Depressurizer	Lock Hopper	13 tonne/hr (15 tph)	2	0
4	Slag Receiving Tank	Horizontal, weir	152,000 liters (40,000 gal)	2	0
5	Black Water Overflow Tank	Shop fabricated	68,000 liters (18,000 gal)	2	0
6	Slag Conveyor	Drag chain	13 tonne/hr (15 tph)	2	0
7	Slag Separation Screen	Vibrating	13 tonne/hr (15 tph)	2	0
8	Coarse Slag Conveyor	Belt/bucket	13 tonne/hr (15 tph)	2	0
9	Fine Ash Settling Tank	Vertical, gravity	216,000 liters (57,000 gal)	2	0
10	Fine Ash Recycle Pumps	Horizontal centrifugal	60 lpm @ 14 m H_2O (10 gpm @ 46 ft H_2O)	2	2
11	Grey Water Storage Tank	Field erected	69,000 liters (18,000 gal)	2	0
12	Grey Water Pumps	Centrifugal	240 lpm @ 560 m H_2O (60 gpm @ 1,850 ft H_2O)	2	2
13	Slag Storage Bin	Vertical, field erected	1,000 tonne (1,000 tons)	2	0
14	Unloading Equipment	Telescoping chute	110 tonne/hr (120 tph)	1	0

Case B5B-Q – Account 11: Accessory Electric Plant

Equipment No.	Description	Type	Design Condition	Operating Qty.	Spares
1	CTG Transformer	Oil-filled	24 kV/345 kV, 260 MVA, 3-ph, 60 Hz	2	0
2	STG Transformer	Oil-filled	24 kV/345 kV, 210 MVA, 3-ph, 60 Hz	1	0
3	High Voltage Auxiliary Transformer	Oil-filled	345 kV/13.8 kV, 81 MVA, 3-ph, 60 Hz	2	0
4	Medium Voltage Transformer	Oil-filled	24 kV/4.16 kV, 42 MVA, 3-ph, 60 Hz	1	1
5	Low Voltage Transformer	Dry ventilated	4.16 kV/480 V, 6 MVA, 3-ph, 60 Hz	1	1
6	CTG Isolated Phase Bus Duct and Tap Bus	Aluminum, self-cooled	24 kV, 3-ph, 60 Hz	2	0
7	STG Isolated Phase Bus Duct and Tap Bus	Aluminum, self-cooled	24 kV, 3-ph, 60 Hz	1	0
8	Medium Voltage Switchgear	Metal clad	4.16 kV, 3-ph, 60 Hz	1	1
9	Low Voltage Switchgear	Metal enclosed	480 V, 3-ph, 60 Hz	1	1
10	Emergency Diesel Generator	Sized for emergency shutdown	750 kW, 480 V, 3-ph, 60 Hz	1	0

Case B5B-Q – Account 12: Instrumentation and Control

Equipment No.	Description	Type	Design Condition	Operating Qty.	Spares
1	DCS - Main Control	Monitor/keyboard; Operator printer (laser color); Engineering printer (laser B&W)	Operator stations/printers and engineering stations/printers	1	0
2	DCS - Processor	Microprocessor with redundant input/output	N/A	1	0
3	DCS - Data Highway	Fiber optic	Fully redundant, 25% spare	1	0

3.4.15 Case B5B-Q – Cost Estimating

The cost estimating methodology was described previously in Section 2.7. Exhibit 3-133 shows a detailed breakdown of the capital costs; Exhibit 3-134 shows the owner's costs, TOC, and TASC; Exhibit 3-135 shows the initial and annual O&M costs; and Exhibit 3-136 shows the LCOE breakdown.

The estimated TPC of the GEP gasifier with CO_2 capture in quench-only configuration is $4,855/kW. Process contingency represents 4.6 percent of the TPC and project contingency represents 15.6 percent. The LCOE, including CO_2 T&S costs of $9.1/MWh, is $148.5/MWh. For comparison, the TPC and LCOE for Case B5B, GEP in radiant-only configuration with CO_2 capture, are $5,240/kW and $152.3/MWh.

Exhibit 3-133. Case B5B-Q total plant cost details

Case:	B5B-Q	– GEP Quench IGCC w/ CO_2					Estimate Type:			Conceptual	
Plant Size (MW, net):	499						Cost Base:			Dec 2018	
Item No.	Description	Equipment Cost	Material Cost	Labor		Bare Erected Cost	Eng'g CM H.O.& Fee	Contingencies		Total Plant Cost	
				Direct	Indirect			Process	Project	$/1,000	$/kW
1	Coal Handling										
1.1	Coal Receive & Unload	$991	$0	$477	$0	$1,468	$220	$0	$338	$2,026	$4
1.2	Coal Stackout & Reclaim	$3,238	$0	$774	$0	$4,012	$602	$0	$923	$5,537	$11
1.3	Coal Conveyors & Yard Crush	$30,893	$0	$7,863	$0	$38,756	$5,813	$0	$8,914	$53,483	$107
1.4	Other Coal Handling	$4,812	$0	$1,083	$0	$5,895	$884	$0	$1,356	$8,135	$16
1.9	Coal & Sorbent Handling Foundations	$0	$87	$227	$0	$313	$47	$0	$72	$432	$1
	Subtotal	**$39,933**	**$87**	**$10,424**	**$0**	**$50,444**	**$7,567**	**$0**	**$11,602**	**$69,612**	**$139**
2	Coal Preparation & Feed										
2.1	Coal Crushing & Drying	$2,401	$145	$345	$0	$2,891	$434	$0	$665	$3,989	$8
2.2	Prepared Coal Storage & Feed	$7,376	$1,772	$1,142	$0	$10,290	$1,543	$0	$2,367	$14,200	$28
2.3	Slurry Coal Injection System	$6,376	$0	$4,008	$0	$10,384	$1,558	$0	$2,388	$14,330	$29
2.4	Miscellaneous Coal Preparation & Feed	$728	$532	$1,568	$0	$2,828	$424	$0	$650	$3,902	$8
2.9	Coal & Sorbent Feed Foundation	$0	$1,772	$1,520	$0	$3,292	$494	$0	$757	$4,543	$9
	Subtotal	**$16,881**	**$4,221**	**$8,583**	**$0**	**$29,685**	**$4,453**	**$0**	**$6,827**	**$40,965**	**$82**
3	Feedwater & Miscellaneous BOP Systems										
3.1	Feedwater System	$1,402	$2,404	$1,202	$0	$5,009	$751	$0	$1,152	$6,912	$14
3.2	Water Makeup & Pretreating	$6,053	$605	$3,430	$0	$10,088	$1,513	$0	$3,480	$15,081	$30
3.3	Other Feedwater Subsystems	$725	$238	$226	$0	$1,188	$178	$0	$273	$1,640	$3
3.4	Service Water Systems	$1,809	$3,453	$11,181	$0	$16,443	$2,466	$0	$5,673	$24,582	$49
3.5	Other Boiler Plant Systems	$186	$68	$169	$0	$422	$63	$0	$97	$583	$1
3.6	Natural Gas Pipeline and Start-Up System	$7,254	$312	$234	$0	$7,800	$1,170	$0	$1,794	$10,764	$22
3.7	Waste Water Treatment Equipment	$8,013	$0	$4,911	$0	$12,924	$1,939	$0	$4,459	$19,322	$39
3.8	Vacuum Flash, Brine Concentrator, & Crystallizer	$42,058	$0	$26,042	$0	$68,100	$10,215	$0	$23,495	$101,810	$204
3.9	Miscellaneous Plant Equipment	$15,447	$2,026	$7,850	$0	$25,322	$3,798	$0	$8,736	$37,857	$76
	Subtotal	**$82,946**	**$9,105**	**$55,245**	**$0**	**$147,296**	**$22,094**	**$0**	**$49,159**	**$218,549**	**$438**
4	Gasifier, ASU, & Accessories										
4.1	Gasifier (Quench Only) & Auxiliaries (GEP)	$258,840	$0	$222,447	$0	$481,287	$72,193	$67,380	$93,129	$713,989	$1,430
4.2	Syngas Cooler	w/4.1	w/4.1	w/4.1	$0	$0	$0	$0	$0	$0	$0
4.3	Air Separation Unit/Oxidant Compression	$58,184	$0	$22,105	$0	$80,289	$12,043	$0	$18,467	$110,799	$222
4.5	Miscellaneous Gasification Equipment	$3,265	$0	$2,806	$0	$6,071	$911	$0	$1,396	$8,378	$17
4.6	Low Temperature Heat Recovery & Flue Gas Saturation	$45,026	$0	$17,106	$0	$62,132	$9,320	$0	$14,290	$85,742	$172

Case:		B5B-Q	– GEP Quench IGCC w/ CO_2					Estimate Type:		Conceptual	
Plant Size (MW, net):		499						Cost Base:		Dec 2018	
Item No.	Description	Equipment Cost	Material Cost	Labor		Bare Erected Cost	Eng'g CM H.O.& Fee	Contingencies		Total Plant Cost	
				Direct	Indirect			Process	Project	$/1,000	$/kW
4.7	Flare Stack System	$1,932	$0	$341	$0	$2,273	$341	$0	$392	$3,006	$6
4.8	Black Water & Sour Gas Section	w/4.1	w/4.1	w/4.1	$0	$0	$0	$0	$0	$0	$0
4.15	Major Component Rigging	$182	$0	$156	$0	$338	$51	$0	$58	$447	$1
4.16	Gasification Foundations	$0	$407	$356	$0	$763	$114	$0	$219	$1,097	$2
	Subtotal	**$367,428**	**$407**	**$265,318**	**$0**	**$633,153**	**$94,973**	**$67,380**	**$127,952**	**$923,458**	**$1,850**
5						Syngas Cleanup					
5.1	Double Stage Selexol	$124,947	$0	$51,035	$0	$175,982	$26,397	$35,196	$47,515	$285,091	$571
5.2	Sulfur Removal	w/5.1	w/5.1	w/5.1	$0	$0	$0	$0	$0	$0	$0
5.3	Elemental Sulfur Plant	$48,707	$9,494	$62,410	$0	$120,611	$18,092	$0	$27,740	$166,443	$333
5.4	Carbon Dioxide (CO_2) Compression & Drying	$32,267	$4,840	$13,977	$0	$51,084	$7,663	$0	$11,749	$70,495	$141
5.5	Carbon Dioxide (CO_2) Compressor Aftercooler	$481	$76	$206	$0	$764	$115	$0	$176	$1,054	$2
5.6	Mercury Removal (Carbon Bed)	$279	$0	$211	$0	$490	$73	$24	$118	$705	$1
5.7	Water Gas Shift (WGS) Reactors	$61,197	$0	$24,468	$0	$85,664	$12,850	$0	$19,703	$118,217	$237
5.10	Blowback Gas Systems	$761	$428	$239	$0	$1,428	$214	$0	$246	$1,888	$4
5.11	Fuel Gas Piping	$0	$960	$628	$0	$1,587	$238	$0	$365	$2,191	$4
5.12	Gas Cleanup Foundations	$0	$227	$153	$0	$381	$57	$0	$131	$569	$1
	Subtotal	**$268,639**	**$16,025**	**$153,326**	**$0**	**$437,991**	**$65,699**	**$35,221**	**$107,744**	**$646,654**	**$1,296**
6						Combustion Turbine & Accessories					
6.1	Combustion Turbine Generator	$76,557	$0	$5,425	$0	$81,983	$12,297	$8,198	$15,372	$117,850	$236
6.2	Syngas Expander	$2,133	$0	$293	$0	$2,426	$364	$0	$419	$3,209	$6
6.3	Combustion Turbine Accessories	$2,687	$0	$164	$0	$2,851	$428	$0	$492	$3,770	$8
6.4	Compressed Air Piping	$0	$509	$333	$0	$843	$126	$0	$194	$1,163	$2
6.5	Combustion Turbine Foundations	$0	$216	$250	$0	$467	$70	$0	$161	$697	$1
	Subtotal	**$81,378**	**$726**	**$6,465**	**$0**	**$88,569**	**$13,285**	**$8,198**	**$16,637**	**$126,690**	**$254**
7						HRSG, Ductwork, & Stack					
7.1	Heat Recovery Steam Generator	$33,944	$0	$6,573	$0	$40,517	$6,078	$0	$6,989	$53,584	$107
7.2	Heat Recovery Steam Generator Accessories	$12,120	$0	$2,347	$0	$14,467	$2,170	$0	$2,496	$19,133	$38
7.3	Ductwork	$0	$1,091	$765	$0	$1,856	$278	$0	$427	$2,562	$5
7.4	Stack	$9,282	$0	$3,463	$0	$12,745	$1,912	$0	$2,198	$16,855	$34
7.5	Heat Recovery Steam Generator, Ductwork & Stack Foundations	$0	$231	$232	$0	$463	$69	$0	$160	$692	$1
	Subtotal	**$55,346**	**$1,322**	**$13,380**	**$0**	**$70,048**	**$10,507**	**$0**	**$12,270**	**$92,825**	**$186**
8						Steam Turbine & Accessories					
8.1	Steam Turbine Generator & Accessories	$32,004	$0	$4,419	$0	$36,423	$5,463	$0	$6,283	$48,169	$97
8.2	Steam Turbine Plant Auxiliaries	$1,525	$0	$3,479	$0	$5,003	$751	$0	$863	$6,617	$13

Case:	B5B-Q	– GEP Quench IGCC w/ CO_2					Estimate Type:			Conceptual	
Plant Size (MW, net):	499						Cost Base:			Dec 2018	
Item No.	Description	Equipment Cost	Material Cost	Labor Direct	Labor Indirect	Bare Erected Cost	Eng'g CM H.O.& Fee	Contingencies Process	Contingencies Project	Total Plant Cost $/1,000	Total Plant Cost $/kW
8.3	Condenser & Auxiliaries	$6,875	$0	$3,893	$0	$10,767	$1,615	$0	$1,857	$14,240	$29
8.4	Steam Piping	$4,692	$0	$2,035	$0	$6,727	$1,009	$0	$1,934	$9,669	$19
8.5	Turbine Generator Foundations	$0	$238	$420	$0	$658	$99	$0	$227	$983	$2
	Subtotal	**$45,095**	**$238**	**$14,245**	**$0**	**$59,578**	**$8,937**	**$0**	**$11,164**	**$79,679**	**$160**
9						Cooling Water System					
9.1	Cooling Towers	$12,780	$0	$3,856	$0	$16,636	$2,495	$0	$2,870	$22,001	$44
9.2	Circulating Water Pumps	$1,659	$0	$126	$0	$1,785	$268	$0	$308	$2,361	$5
9.3	Circulating Water System Auxiliaries	$11,342	$0	$1,579	$0	$12,921	$1,938	$0	$2,229	$17,088	$34
9.4	Circulating Water Piping	$0	$6,344	$5,745	$0	$12,089	$1,813	$0	$2,780	$16,683	$33
9.5	Make-up Water System	$706	$0	$971	$0	$1,677	$252	$0	$386	$2,314	$5
9.6	Component Cooling Water System	$231	$276	$190	$0	$696	$104	$0	$160	$961	$2
9.7	Circulating Water System Foundations	$0	$523	$929	$0	$1,451	$218	$0	$501	$2,170	$4
	Subtotal	**$26,719**	**$7,143**	**$13,395**	**$0**	**$47,256**	**$7,088**	**$0**	**$9,234**	**$63,578**	**$127**
10						Slag Recovery & Handling					
10.1	Slag Dewatering & Cooling	$2,094	$0	$1,025	$0	$3,119	$468	$0	$538	$4,125	$8
10.2	Gasifier Ash Depressurization	$1,186	$0	$581	$0	$1,767	$265	$0	$305	$2,337	$5
10.3	Cleanup Ash Depressurization	$533	$0	$261	$0	$794	$119	$0	$137	$1,050	$2
10.6	Ash Storage Silos	$1,182	$0	$1,277	$0	$2,459	$369	$0	$424	$3,252	$7
10.7	Ash Transport & Feed Equipment	$455	$0	$106	$0	$562	$84	$0	$97	$743	$1
10.8	Miscellaneous Ash Handling Equipment	$65	$80	$24	$0	$169	$25	$0	$29	$223	$0
10.9	Ash/Spent Sorbent Foundation	$0	$467	$608	$0	$1,075	$161	$0	$371	$1,607	$3
	Subtotal	**$5,515**	**$547**	**$3,882**	**$0**	**$9,945**	**$1,492**	**$0**	**$1,901**	**$13,337**	**$27**
11						Accessory Electric Plant					
11.1	Generator Equipment	$2,384	$0	$1,798	$0	$4,182	$627	$0	$721	$5,531	$11
11.2	Station Service Equipment	$4,252	$0	$365	$0	$4,617	$693	$0	$796	$6,106	$12
11.3	Switchgear & Motor Control	$25,660	$0	$4,452	$0	$30,111	$4,517	$0	$5,194	$39,822	$80
11.4	Conduit & Cable Tray	$0	$114	$328	$0	$441	$66	$0	$127	$634	$1
11.5	Wire & Cable	$0	$1,557	$2,783	$0	$4,340	$651	$0	$1,248	$6,238	$12
11.6	Protective Equipment	$241	$0	$837	$0	$1,078	$162	$0	$186	$1,426	$3
11.7	Standby Equipment	$820	$0	$757	$0	$1,577	$236	$0	$272	$2,085	$4
11.8	Main Power Transformers	$6,071	$0	$124	$0	$6,195	$929	$0	$1,069	$8,192	$16
11.9	Electrical Foundations	$0	$70	$178	$0	$248	$37	$0	$86	$371	$1
	Subtotal	**$39,427**	**$1,741**	**$11,621**	**$0**	**$52,789**	**$7,918**	**$0**	**$9,699**	**$70,406**	**$141**
12						Instrumentation & Control					
12.1	Integrated Gasification and Combined Cycle Control Equipment	$535	$0	$460	$0	$995	$149	$0	$172	$1,316	$3
12.2	Combustion Turbine Control Equipment	$687	$0	$49	$0	$735	$110	$0	$127	$973	$2
12.3	Steam Turbine Control Equipment	$642	$0	$89	$0	$731	$110	$0	$126	$967	$2

Case:		B5B-Q	– GEP Quench IGCC w/ CO_2					Estimate Type:		Conceptual	
Plant Size (MW, net):		499						Cost Base:		Dec 2018	
Item No.	Description	Equipment Cost	Material Cost	Labor		Bare Erected Cost	Eng'g CM H.O.& Fee	Contingencies		Total Plant Cost	
				Direct	Indirect			Process	Project	$/1,000	$/kW
12.4	Other Major Component Control Equipment	$1,225	$0	$835	$0	$2,060	$309	$103	$371	$2,843	$6
12.5	Signal Processing Equipment	$951	$0	$31	$0	$982	$147	$0	$169	$1,299	$3
12.6	Control Boards, Panels & Racks	$275	$0	$180	$0	$455	$68	$23	$109	$656	$1
12.7	Distributed Control System Equipment	$9,980	$0	$327	$0	$10,306	$1,546	$515	$1,855	$14,223	$28
12.8	Instrument Wiring & Tubing	$497	$397	$1,589	$0	$2,483	$372	$124	$745	$3,724	$7
12.9	Other Instrumentation & Controls Equipment	$1,114	$0	$552	$0	$1,666	$250	$83	$300	$2,299	$5
	Subtotal	**$15,907**	**$397**	**$4,111**	**$0**	**$20,415**	**$3,062**	**$849**	**$3,974**	**$28,301**	**$57**
13						**Improvements to Site**					
13.1	Site Preparation	$0	$417	$9,486	$0	$9,903	$1,486	$0	$3,417	$14,806	$30
13.2	Site Improvements	$0	$1,885	$2,666	$0	$4,551	$683	$0	$1,570	$6,804	$14
13.3	Site Facilities	$2,943	$0	$3,304	$0	$6,248	$937	$0	$2,155	$9,340	$19
	Subtotal	**$2,943**	**$2,303**	**$15,456**	**$0**	**$20,702**	**$3,105**	**$0**	**$7,142**	**$30,950**	**$62**
14						**Buildings & Structures**					
14.1	Combustion Turbine Area	$0	$314	$177	$0	$491	$74	$0	$85	$649	$1
14.3	Steam Turbine Building	$0	$2,732	$3,890	$0	$6,622	$993	$0	$1,142	$8,758	$18
14.4	Administration Building	$0	$877	$636	$0	$1,513	$227	$0	$261	$2,001	$4
14.5	Circulation Water Pumphouse	$0	$153	$81	$0	$234	$35	$0	$40	$310	$1
14.6	Water Treatment Buildings	$0	$411	$401	$0	$812	$122	$0	$140	$1,074	$2
14.7	Machine Shop	$0	$485	$331	$0	$816	$122	$0	$141	$1,079	$2
14.8	Warehouse	$0	$378	$244	$0	$622	$93	$0	$107	$822	$2
14.9	Other Buildings & Structures	$0	$277	$216	$0	$492	$74	$0	$85	$651	$1
14.10	Waste Treating Building & Structures	$0	$775	$1,480	$0	$2,256	$338	$0	$389	$2,983	$6
	Subtotal	**$0**	**$6,402**	**$7,456**	**$0**	**$13,858**	**$2,079**	**$0**	**$2,391**	**$18,327**	**$37**
	Total	**$1,048,158**	**$50,664**	**$582,907**	**$0**	**$1,681,729**	**$252,259**	**$111,648**	**$377,695**	**$2,423,331**	**$4,855**

Exhibit 3-134. Case B5B-Q owner's costs

Description	$/1,000	$/kW
Pre-Production Costs		
6 Months All Labor	$20,562	$41
1 Month Maintenance Materials	$4,922	$10
1 Month Non-Fuel Consumables	$1,162	$2
1 Month Waste Disposal	$785	$2
25% of 1 Months Fuel Cost at 100% CF	$2,290	$5
2% of TPC	$48,467	$97
Total	**$78,187**	**$157**
Inventory Capital		
60-day supply of fuel and consumables at 100% CF	$20,117	$40
0.5% of TPC (spare parts)	$12,117	$24
Total	**$32,234**	**$65**
Other Costs		
Initial Cost for Catalyst and Chemicals	$26,621	$53
Land	$900	$2
Other Owner's Costs	$363,500	$728
Financing Costs	$65,430	$131
Total Overnight Costs (TOC)	**$2,990,203**	**$5,991**
TASC Multiplier (IOU, 35 year)	1.154	
Total As-Spent Cost (TASC)	**$3,451,926**	**$6,916**

Exhibit 3-135. Case B5B-Q initial and annual operating and maintenance costs

Case:	B5B-Q	– GEP Quench IGCC w/ CO_2			Cost Base:	Dec 2018
Plant Size (MW, net):	499	Heat Rate-net (Btu/kWh):		11,287	Capacity Factor (%):	80
Operating & Maintenance Labor						
Operating Labor				**Operating Labor Requirements per Shift**		
Operating Labor Rate (base):		38.50	**$/hour**	Skilled Operator:	2.0	
Operating Labor Burden:		30.00	**% of base**	Operator:	11.0	
Labor O-H Charge Rate:		25.00	**% of labor**	Foreman:	1.0	
				Lab Techs, etc.:	3.0	
				Total:	**17.0**	
Fixed Operating Costs						
					Annual Cost	
					($)	**($/kW-net)**
Annual Operating Labor:					$7,453,446	$14.933
Maintenance Labor:					$25,444,981	$50.980
Administrative & Support Labor:					$8,224,607	$16.478
Property Taxes and Insurance:					$48,466,630	$97.104
Total:					**$89,589,663**	**$179.495**
Variable Operating Costs						
					($)	**($/MWh-net)**
Maintenance Material:					$47,254,964	$13.50978
Consumables						
	Initial Fill	**Per Day**	**Per Unit**	**Initial Fill**		
Water (gal/1000):	0	4,526	$1.90	$0	$2,510,874	$0.71784
Makeup and Waste Water Treatment Chemicals (ton):	0	13.5	$550.00	$0	$2,165,130	$0.61899
Sulfur-Impregnated Activated Carbon (ton):	77.6	0.106	$12,000.00	$931,641	$372,656	$0.10654
Water Gas Shift (WGS) Catalyst (ft^3):	9,847	6.74	$480.00	$4,726,381	$945,276	$0.27025
Selexol Solution (gal):	551,651	54.7	$38.00	$20,962,748	$606,983	$0.17353
Sodium Hydroxide (50 wt%, ton):	0	20.5	$600.00	$0	$3,585,735	$1.02513
Sulfuric Acid (98 wt%, ton):	0	0.655	$210.00	$0	$40,154	$0.01148
Claus Catalyst (ft^3):	w/equip.	2.00	$48.00	$0	$28,071	$0.00803
Triethylene Glycol (gal):	w/equip.	453	$6.80	$0	$898,591	$0.25690
Subtotal:				**$26,620,770**	**$11,153,471**	**$3.18868**
Waste Disposal						
Sulfur-Impregnated Activated Carbon (ton):	0	0.106	$80.00	$0	$2,484	$0.00071
WGS Catalyst (ft^3):	0	6.74	$2.50	$0	$4,923	$0.00141
Selexol Solution (gal):	0	54.7	$0.35	$0	$5,591	$0.00160
Claus Catalyst (ft^3):	0	2.00	$2.50	$0	$1,462	$0.00042
Crystallizer Solids (ton):	0	38.2	$38.00	$0	$423,833	$0.12117
Slag (ton):	0	636	$38.00	$0	$7,054,976	$2.01696
Triethylene Glycol (gal):	0	453	$0.35	$0	$46,251	$0.01322
Subtotal:				**$0**	**$7,539,521**	**$2.15548**
By-Products						
Sulfur (tons):	0	145	$0.00	$0	$0	$0.00000
Subtotal:				**$0**	**$0**	**$0.00000**
Variable Operating Costs Total:				**$26,620,770**	**$65,947,956**	**$18.85395**
Fuel Cost						
Illinois Number 6 (ton):	0	5,795	$51.96	$0	$87,920,591	$25.13573
Total:				**$0**	**$87,920,591**	**$25.13573**

Exhibit 3-136. Case B5B-Q LCOE breakdown

Component	Value, $/MWh	Percentage
Capital	69.8	47%
Fixed	25.6	19%
Variable	18.9	14%
Fuel	25.1	19%
Total (Excluding T&S)	**139.4**	**N/A**
CO_2 T&S	9.1	7%
Total (Including T&S)	**148.5**	**N/A**

3.5 IGCC Case Summary

The performance and cost results of the seven IGCC plant configurations modeled in this report are summarized in Exhibit 3-137. A graph of the net plant efficiency (HHV basis) is provided in Exhibit 3-138.

Exhibit 3-137. Estimated performance results for all IGCC cases

	Integrated Gasification Combined Cycle						
	Shell		E-Gas™ FSQ		GEP R+Q		
Case Name	**B1A**	**B1B**	**B4A**	**B4B**	**B5A**	**B5B**	**B5B-Q**
PERFORMANCE							
Gross Power Output (MWe)	765	696	763	742	765	741	685
Auxiliary Power Requirement (MWe)	125	177	122	185	131	185	186
Net Power Output (MWe)	640	519	641	557	634	556	499
Coal Flow rate (lb/hr)	435,418	467,308	456,327	482,173	464,732	482,580	482,918
HHV Thermal Input (kW_t)	1,488,680	1,597,710	1,560,166	1,648,535	1,588,902	1,649,926	1,651,082
Net Plant HHV Efficiency (%)	43.0%	32.5%	41.1%	33.8%	39.9%	33.7%	30.2%
Net Plant HHV Heat Rate (Btu/kWh)	7,940	10,497	8,308	10,101	8,554	10,118	11,287
Raw Water Withdrawal, gpm	4,127	5,080	4,357	5,197	4,799	5,512	6,286
Process Water Discharge, gpm	922	1,075	944	1,103	1,033	1,123	1,218
Raw Water Consumption, gpm	3,206	4,005	3,413	4,093	3,766	4,389	5,068
CO_2 Capture Rate (%)	0	90	0	90	0	90	90
CO_2 Emissions (lb/MMBtu)	200	21	199	20	197	20	20
CO_2 Emissions (lb/MWh-gross)	1,328	161	1,391	153	1,396	151	163
CO_2 Emissions (lb/MWh-net)	1,588	215	1,657	204	1,685	201	224
SO_2 Emissions (lb/MMBtu)[A]	0.020	0.000	0.028	0.000	0.002	0.000	0.000
SO_2 Emissions (lb/MWh-gross)[A]	0.130	0.000	0.192	0.000	0.015	0.000	0.000
NOx Emissions (lb/MMBtu)	0.059	0.049	0.056	0.049	0.054	0.048	0.048
NOx Emissions (lb/MWh-gross)	0.390	0.382	0.393	0.371	0.379	0.364	0.394
PM Emissions (lb/MMBtu)	0.007	0.007	0.007	0.007	0.007	0.007	0.007
PM Emissions (lb/MWh-gross)	0.047	0.056	0.050	0.054	0.050	0.054	0.058
Hg Emissions (lb/TBtu)	0.452	0.383	0.430	0.396	0.423	0.395	0.365
Hg Emissions (lb/MWh-gross)[B]	3.00×10^{-6}	3.00×10^{-6}	3.00×10^{-6}	3.00×10^{-6}	3.00×10^{-6}	3.00×10^{-6}	3.00×10^{-6}

	Integrated Gasification Combined Cycle						
	Shell		E-Gas™ FSQ		GEP R+Q		
Case Name	B1A	B1B	B4A	B4B	B5A	B5B	B5B-Q
COST							
Total Plant Cost (2018$/kW)	3,824	6,209	3,395	5,177	3,822	5,240	4,855
Bare Erected Cost	2,674	4,279	2,386	3,588	2,679	3,631	3,369
Home Office Expenses	401	642	358	538	402	545	505
Project Contingency	554	923	499	786	557	783	757
Process Contingency	195	366	151	266	184	281	224
Total Overnight Cost (2018$/MM)	$2,991	$3,964	$2,664	$3,555	$2,972	$3,589	$2,990
Total Overnight Cost (2018$/kW)	4,675	7,632	4,157	6,384	4,690	6,450	5,991
Owner's Costs	851	1,423	763	1,207	868	1,210	1,136
Total As-Spent Cost (2018$/kW)	5,397	8,810	4,799	7,370	5,414	7,446	6,916
LCOE ($/MWh) (excluding T&S)	105.8	166.5	97.5	143.1	107.9	144.2	139.4
Capital Costs	54.5	88.9	48.4	74.4	54.7	75.2	69.8
Fixed Costs	20.0	31.9	18.0	26.9	20.0	27.2	25.6
Variable Costs	13.6	22.3	12.6	19.4	14.1	19.3	18.9
Fuel Costs	17.7	23.4	18.5	22.5	19.0	22.5	25.1
LCOE ($/MWh) (including T&S)	105.8	175.0	97.5	151.3	107.9	152.3	148.5
CO_2 T&S Costs	N/A	8.6	N/A	8.2	N/A	8.1	9.1

[A] Trace amounts of sulfur emissions may exist in the flue gas stream to the stack in capture cases
[B] As discussed in Section 2.4.3, the mercury capture units were designed to attain the emissions target of 3.00×10^{-6} lb/MWh-gross

The following observations can be made regarding plant performance:

- In the non-carbon capture cases, the dry fed Shell gasifier has the highest net plant efficiency (43.0 percent), followed by the two-stage E-Gas™ slurry fed gasifier (41.1 percent) and the single-stage slurry fed GEP gasifier (39.9 percent). The absolute values of the GEP and E-Gas™ gasifiers are close to the reported values per the vendors. [21], [103] The Shell efficiency is slightly lower than reported by the vendor in other presentations. [97]
- The energy penalty associated with adding CO_2 capture is due to steam extraction for use in the WGS reaction, the auxiliary load for the CO_2 separation and compression equipment, and a slight derate of the gas turbine inlet temperature due to the higher moisture content of the working fluid. The reduction in net plant efficiency ranges from 6 to 10 percentage points (16 to 24 percent relative to non-capture) with the variability being due to the different gasifier designs (e.g., slurry versus dry feed, syngas quench versus syngas heat recovery), which may vary between the capture and non-capture plant configurations.
- The lowest CO_2 capture energy penalty (6 percentage points) corresponds to the GEP Radiant gasifier cases primarily due to the non-capture plant design (slurry feed, water quench), which results in a high moisture content in the syngas and thus a low addition of shift steam for WGS for the capture plant design.

- The highest CO_2 capture energy penalty (10 percentage points) corresponds to the Shell gasifier cases. The design uses a dry feed system and, in the non-capture configuration, has relatively high heat recovery in the syngas cooler with no water quench, resulting in very low moisture content in the syngas. For the capture configuration, a water quench is added, which increases the moisture content of the syngas for the WGS reaction but decreases the heat recovery in the syngas cooler.
- CB&I E-Gas™ has the highest SO_2 emissions (0.192 lb/MWh-gross) of the seven cases because refrigerated MDEA has the lowest H_2S removal efficiency of the AGR technologies considered.
- Emissions of Hg, HCl, PM, NOx, and SO_2 are all below the regulatory limits currently in effect and applicable to IGCC technology.

Exhibit 3-138. Net plant efficiency (HHV basis) for all IGCC cases

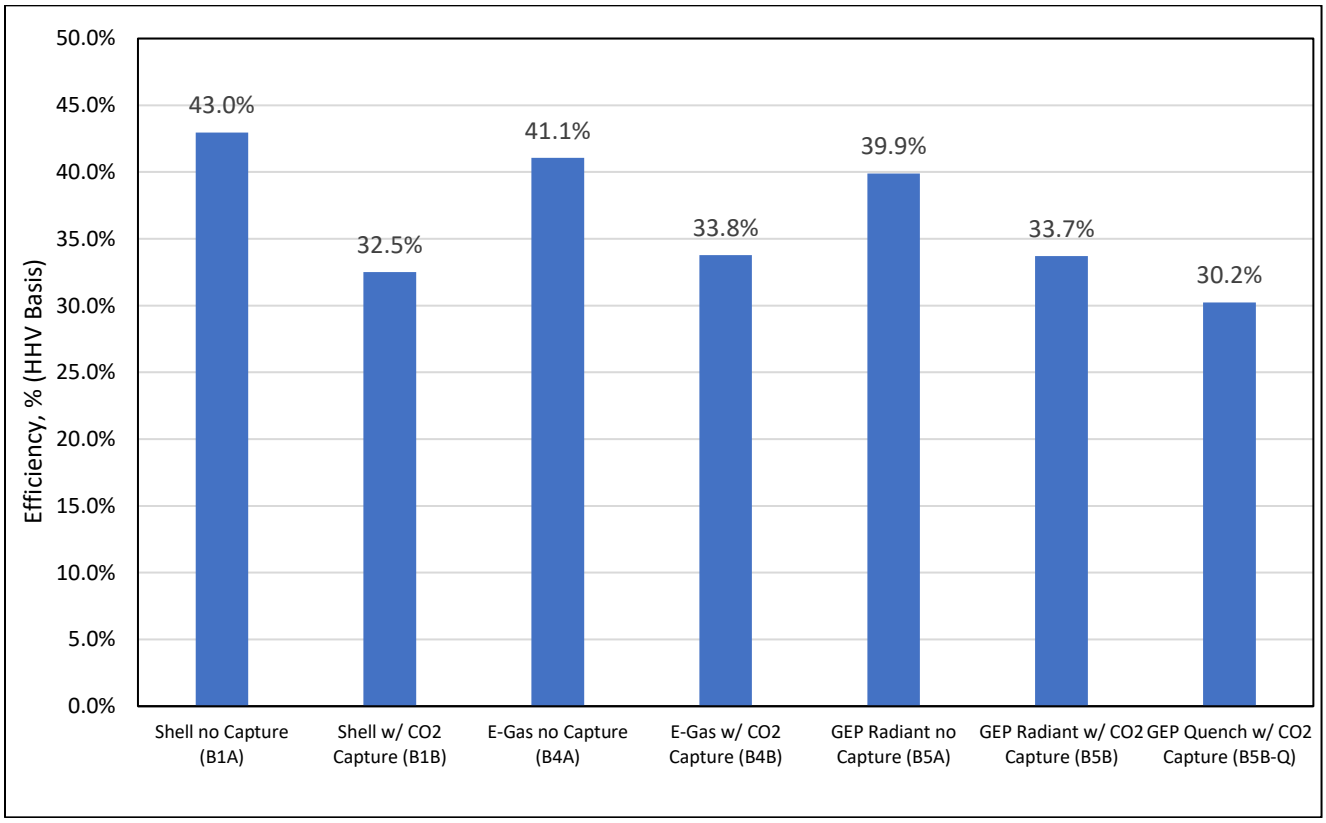

The components of TOC and the overall TASC of the seven cases are shown in Exhibit 3-139.

Exhibit 3-139. Plant capital cost for all IGCC cases

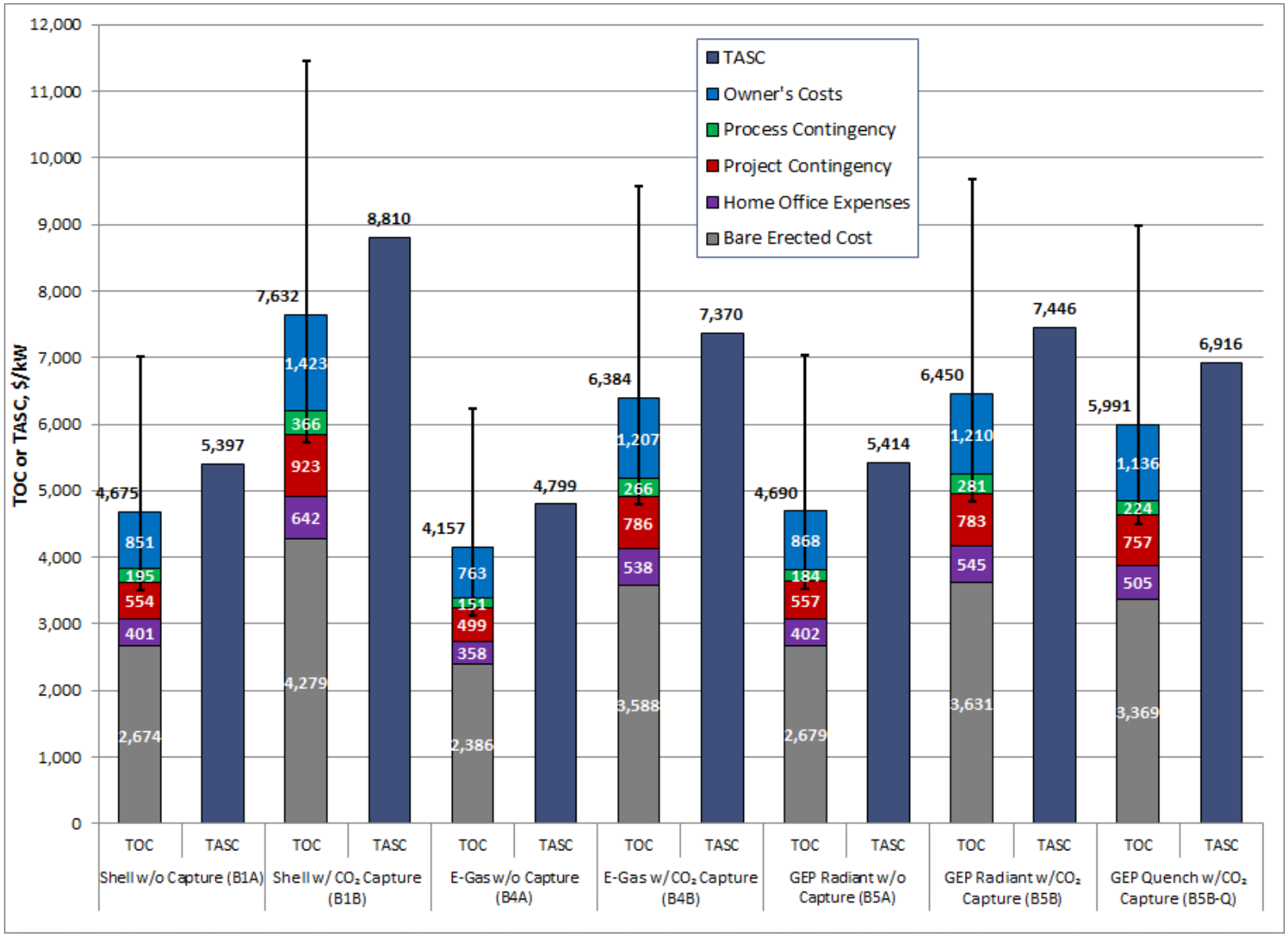

The IGCC capital cost estimate accuracy provides an AACE Class 5 range of -25 percent/+50 percent. The error bars included in Exhibit 3-139 represent the potential TOC range relative to the maximum and minimum of the capital cost uncertainty range.

The following TOC observations are made with the caveat that the differences between cases are less than the estimate accuracy. However, all cases are evaluated using a common set of technical and economic assumptions allowing meaningful comparison among the cases:

- E-Gas™ has the lowest TOC cost among the non-capture cases. The E-Gas™ technology has several features that lend it to being lower cost, such as:
    - The firetube syngas cooler is much smaller and less expensive than a radiant section. E-Gas™ can use a firetube boiler because the two-stage design reduces the gas temperature (slurry quench) into a range where a radiant cooler is not needed.
    - The firetube syngas cooler sits next to the gasifier instead of above or below it, which reduces the height of the main gasifier structure. The E-Gas™ proprietary slag removal system—used instead of lock hoppers below the gasifier—also contributes to the lower structure height.
- The normalized TOC of the GEP Radiant and Shell gasifier non-capture cases are approximately 12 percent greater than E-Gas™.
- The GEP Quench gasifier (GEP Radiant is 8 percent greater than GEP Quench) is the low-cost technology in the CO_2 capture cases, with E-Gas™ normalized TOC approximately 7 percent higher and Shell approximately 27 percent higher.
- The ASU cost represents 3–4 percent of the TOC. The ASU cost includes O_2 and N_2 compression. With N_2 dilution used to the maximum extent possible, N_2 compression costs are significant.
- The normalized TOC premium for adding CO_2 capture averages 46 percent, spanning a TOC increase range of $1,301/kW to $2,957/kW.

The LCOE is shown for all seven cases in Exhibit 3-140.

Exhibit 3-140. LCOE for all IGCC cases

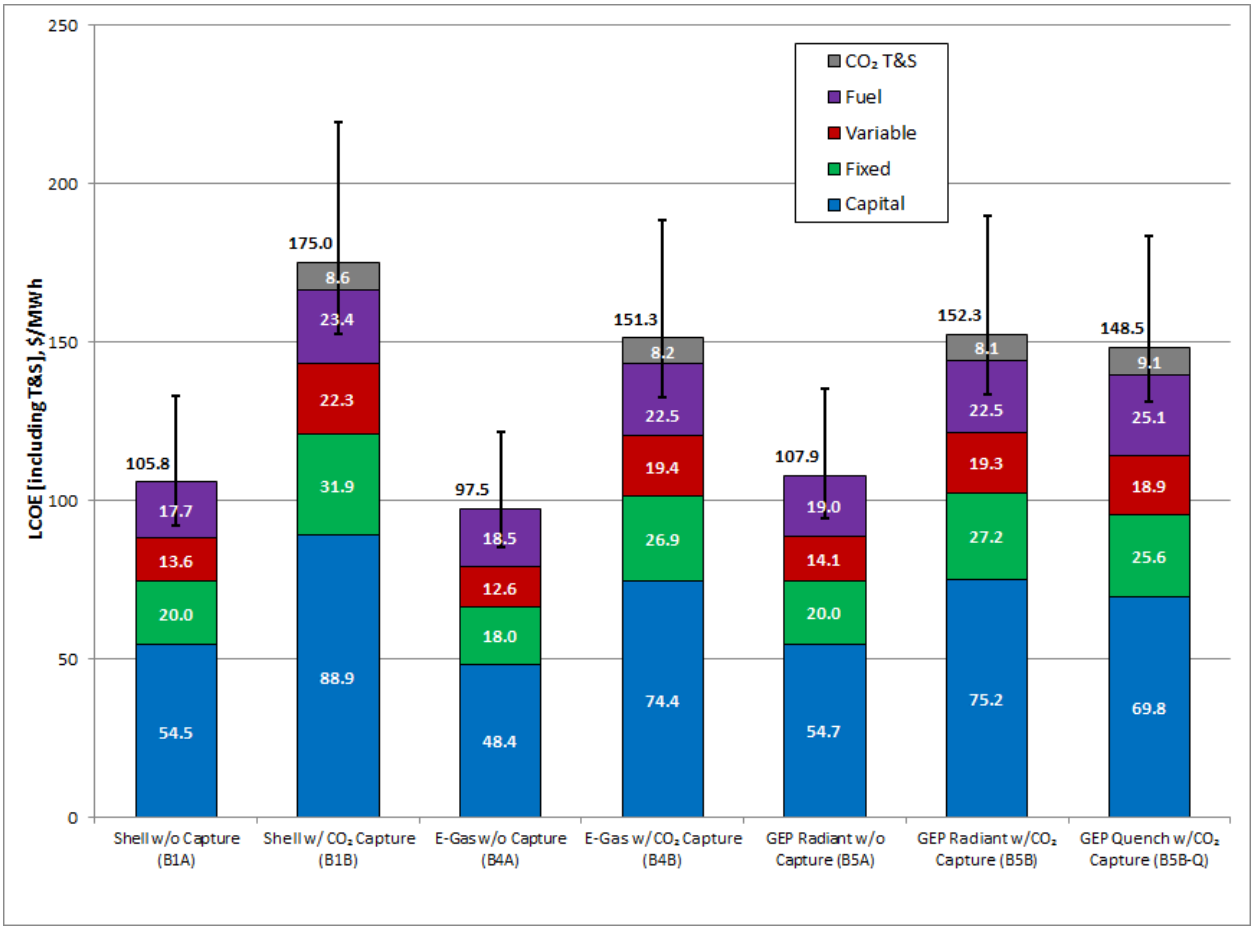

Similar to Exhibit 3-139, the error bars included in Exhibit 3-140 represent the potential LCOE range relative to the maximum and minimum capital cost uncertainty ranges. The LCOE ranges presented are not reflective of other changes, such as variation in fuel price, labor price, CF, or other factors. As an example, if Case B1B's capital cost were determined to be at the high end of the uncertainty range (+50 percent), then the LCOE result would be $219.5/MWh. Conversely, if at the low end of the uncertainty range (-25 percent), the LCOE result would be $152.8/MWh

The following observations can be made:

- The LCOE is dominated by capital costs and is at least 50 percent of the total (excluding T&S costs) in all cases.
- In the non-capture cases the E-Gas™ gasifier has the lowest LCOE, but the differential with Shell is reduced (relative to the normalized TOC comparison) primarily because of the higher efficiency of the Shell gasifier. The Shell LCOE is 8 percent higher than E-Gas™ (compared to 13 percent higher normalized TOC). The GEP gasifier LCOE is about 11 percent higher than E-Gas™.

- In the capture cases, the order of the GEP Radiant and Shell gasifiers is reversed, with GEP Quench being the lowest LCOE option. The range is from $139.4/MWh for GEP Quench to $166.5/MWh for Shell with E-Gas™ and GEP Radiant intermediate at $143.1/MWh and $144.2/MWh, respectively, excluding T&S. The LCOE CO_2 capture premium for the cases averages 50 percent (range of 38-65 percent).
- The CO_2 T&S LCOE component composes 5–6 percent of the total LCOE in all capture cases.

As presented in Section 2.7.4, the breakeven CO_2 sales price and emissions penalty were calculated, and the results for the CO_2 capture cases are shown in Exhibit 3-141. The breakeven CO_2 sales price represents the minimum CO_2 plant gate sales price that will incentivize carbon capture in lieu of a defined reference non-capture plant. The breakeven CO_2 emissions penalty represents the minimum CO_2 emissions price, when applied to both the capture and non-capture plant that will incentivize carbon capture in lieu of a defined reference non-capture plant. Both the breakeven CO_2 sales price and emissions penalty were calculated based on the non-capture SC PC case (Case B12A), presented in Section 4.3. Case B12A has a LCOE of $64.4/MWh, a CO_2 emission rate of 1,627 lb/MWh-gross, a gross plant output of 685 MW, and a net plant output of 650 MW.

Exhibit 3-141. Breakeven CO_2 sales price and emissions penalty for IGCC cases

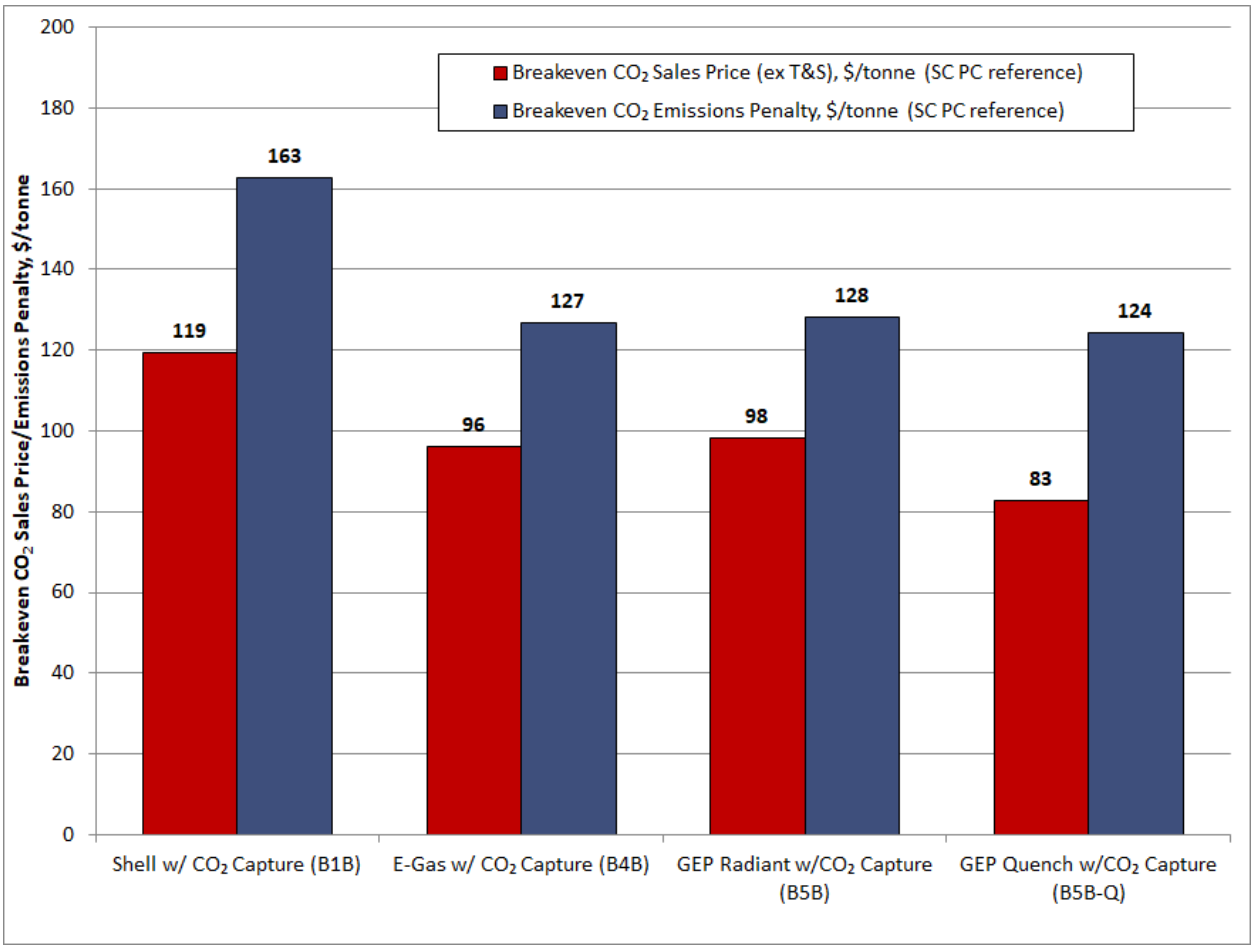

The breakeven CO_2 sales price using SC PC as the non-capture reference case averages $99/tonne ($90/ton) with a range of $82–119/tonne ($75–108/ton). The breakeven CO_2 emissions penalty averages $136/tonne ($123/ton) with a range of $124–163/tonne ($113–148/ton).

The normalized water withdrawal, process discharge, and water consumption are presented in Exhibit 3-142.

Exhibit 3-142. Raw water withdrawal and consumption in IGCC cases

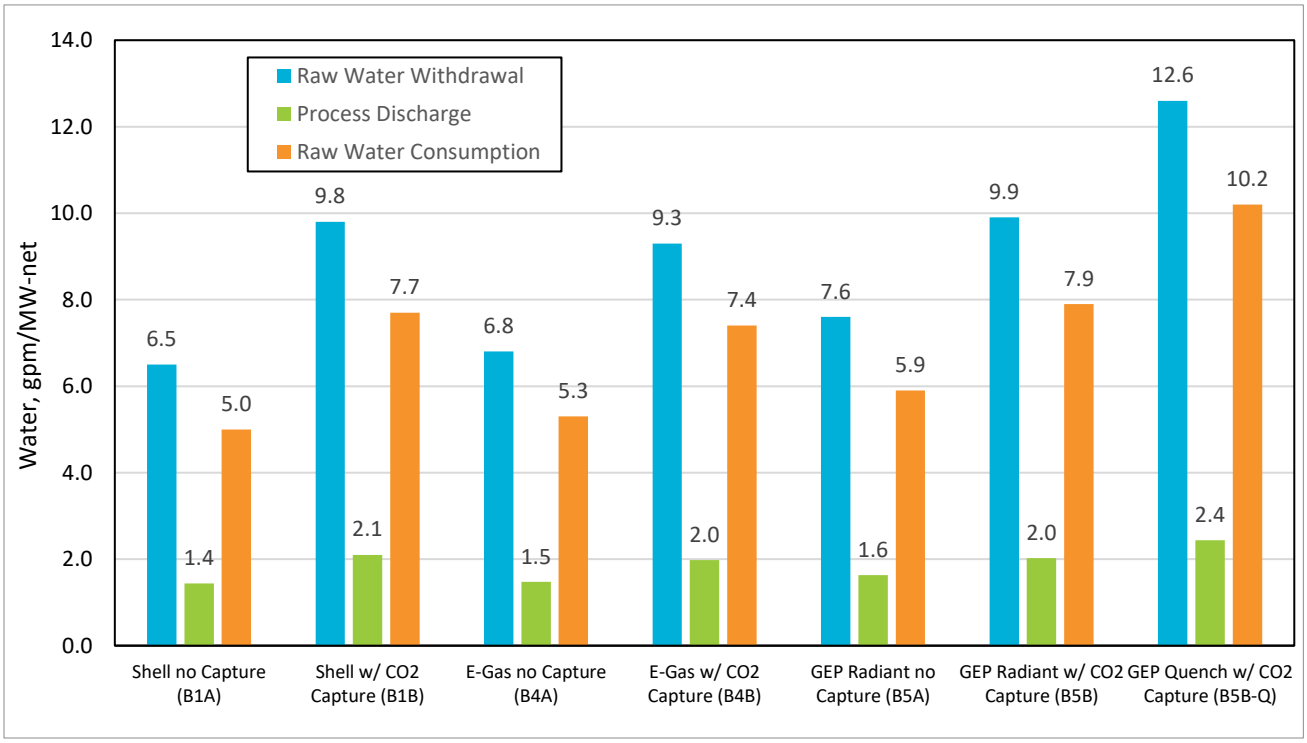

The following observations can be made:

- Normalized water consumption for the GEP non-capture case is 11 percent higher than the E-Gas™ non-capture case and 18 percent higher than the Shell non-capture case primarily because of the large quench water requirement.
- While both the normalized raw water consumption and withdrawal rates are 11 percent and 12 percent greater in the GEP Radiant non-capture case than in the E-Gas™ case, the normalized raw water withdrawal and consumption rates are 5 percent and 6 percent greater, respectively, in the E-Gas™ non-capture case than the Shell case. The discrepancy between withdrawal and consumption is because very little water is available to recover for internal recycle in the dry-fed Shell system.
- The normalized raw water consumption for the four CO_2 capture cases varies by 38 percent from the highest to the lowest. The difference in technologies is where and how the water is introduced. Much of the water is introduced in the quench sections of the GEP and Shell cases while steam is added in the E-Gas™ case.

- Raw water consumption for all cases is dominated by cooling tower makeup requirements, which account for 93–97 percent of raw water consumption in non-capture cases and 81–91 percent in CO_2 capture cases.

PULVERIZED COAL RANKINE CYCLE PLANTS

4 PULVERIZED COAL RANKINE CYCLE PLANTS

Four PC-fired Rankine cycle power plant configurations were evaluated and the results are presented in this section. Each design is based on a market-ready technology that is assumed to be commercially available at the time the project commences. All designs employ a one-on-one configuration comprising a state-of-the art PC steam generator firing Illinois No. 6 coal and a steam turbine.

The PC cases are evaluated with and without CO_2 capture on a common 650 MWe net basis. The designs that include CO_2 capture have a larger gross unit size to compensate for the higher auxiliary loads. The constant net output sizing basis is selected because it provides for a meaningful side-by-side comparison of the results. The boiler and steam turbine industry's ability to match unit size to a custom specification has been commercially demonstrated enabling common net output comparison of the PC cases in this report.

Steam conditions for the Rankine cycle cases were selected based on a survey of boiler and steam turbine original equipment manufacturers (OEM), who were asked for the most advanced steam conditions that they would guarantee for a commercial project in the United States with SubC and SC PC units at a nominal rating and firing Illinois No. 6 coal. [104] Based on the OEM responses, the following single-reheat steam conditions were selected for the study:

- For SubC cases (B11A and B11B) – 16.5 MPa/566°C/566°C (2,400 psig/1,050°F/1,050°F)
- For SC cases (B12A and B12B) – 24.1 MPa/593°C/593°C (3,500 psig/1,100°F/1,100°F)

Steam temperature selection for boilers depends upon fuel corrosiveness. Most of the contacted OEMs believed the steam conditions above this range would be limited to low sulfur coal applications (such as Powder River Basin [PRB] coal). Their primary concern is that elevated temperature operation while firing high sulfur coal (such as Illinois No. 6) would result in an exponential increase of the material wastage rates of the highest temperature portions of the superheater and RH due to coal ash corrosion, requiring pressure parts replacement outages approximately every 10 or 15 years. This cost would offset the value of fuel savings and emissions reduction due to the higher efficiency. In addition, three of the most recently built SC units in North America have steam cycles similar to this report's design basis, namely James E. Rogers Energy Complex in North Carolina, which started operations in 2012 (27.0 MPa/568°C/579°C [3,922 psia/1,055°F/1,075°F]) and Prairie State Energy Campus units 1 and 2, which also started operation in 2012 (26.2 MPa/568°C/568°C [3,800 psig/1,055°F/1,055°F]).

The evaluation basis details, including site ambient conditions, fuel composition and the emissions control basis, are provided in Section 2 of this report.

4.1 PC COMMON PROCESS AREAS

The PC cases have process areas that are common to each plant configuration, such as coal receiving and storage, emissions control technologies, power generation, etc. As detailed descriptions of these process areas in each case section would be burdensome and repetitious,

they are presented in this section for general background information. The performance features of these sections are then presented in the case-specific sections.

4.1.1 Coal, Activated Carbon, and Sorbent Receiving and Storage

The function of the Coal Receiving and Storage system is to unload, convey, prepare, and store the coal delivered to the plant. The scope of the system is from the trestle bottom dumper and coal receiving hoppers up to and including the slide gate valves at the outlet of the coal storage silos. The system is designed to support short-term operation at the 5 percent over pressure/ valves wide open (OP/VWO) condition (16 hours) and long-term operation of 90 days or more at the maximum continuous rating (MCR).

The scope of the sorbent receiving and storage system includes truck roadways, turnarounds, unloading hoppers, conveyors and day storage bins.

Operation Description – The coal is delivered to the site by 100-car unit trains comprising 91 tonne (100 ton) rail cars. The unloading is done by a trestle bottom dumper, which unloads the coal into two receiving hoppers. Coal from each hopper is fed directly into a vibratory feeder. The 8 cm x 0 (3" x 0) coal from the feeder is discharged onto a belt conveyor. Two conveyors with an intermediate transfer tower are assumed to convey the coal to the coal stacker, which transfer the coal to either the long-term storage pile or to the reclaim area. The conveyor passes under a magnetic plate separator to remove tramp iron and then to the reclaim pile.

Coal from the reclaim pile is fed by two vibratory feeders, located under the pile, onto a belt conveyor, which transfers the coal to the coal surge bin located in the crusher tower. The coal is reduced in size to 2.5 cm x 0 (1" x 0) by the coal crushers. The coal is then transferred by conveyor to the transfer tower. In the transfer tower the coal is routed to the tripper that loads the coal into one of the six boiler silos.

Limestone is delivered to the site using 23 tonne (25 ton) trucks. The trucks empty into a below grade hopper where a feeder transfers the limestone to a conveyor for delivery to the storage pile. Limestone from the storage pile is transferred to a reclaim hopper and conveyed to a day bin.

Brominated powdered activated carbon (PAC) is delivered to the site in 9 tonne (10 ton) batches by self-unloading pneumatic trucks. The carbon is unloaded from the truck via an on-board compressor into the dry, welded-steel storage silo where the displaced air is vented through a silo vent filter. The carbon level in the silo is measured by system instrumentation.[h]

Hydrated lime is delivered and distributed in a manner very similar to that of the PAC. The hydrated lime is delivered in 11 tonne (12.5 ton) batches.[h] More comprehensive descriptions of the hydrated lime and PAC systems are provided in sections 4.1.6.1 and 4.1.6.2, respectively.

[h] The description of PAC and hydrated lime unloading were source from a quote provided by United Conveyor Corporation (UCC) to NETL, unless otherwise noted. The information relates to a mercury control system designed by UCC.

4.1.2 Steam Generator and Ancillaries

The steam generator for the SubC PC plants is a drum-type, wall-fired, balanced draft, natural circulation, totally enclosed dry bottom furnace, with superheater, reheater, economizer and air preheater.

The steam generator for the SC plants is a once-through, spiral-wound, Benson-boiler, wall-fired, balanced draft type unit with a water-cooled dry bottom furnace. It includes a superheater, reheater, economizer, and air preheater.

The combustion systems for both SubC and SC steam conditions are equipped with LNBs and OFA. It is assumed for the purposes of this report that the power plant is designed for operation as a base-load unit but with some consideration for daily or weekly cycling.

4.1.2.1 Scope

The steam generator includes the following for both SubC and SC PCs, except where otherwise indicated:

- Drum-type evaporator (SubC only)
- Once-through type steam generator (SC only)
- Startup circuit, including integral separators (SC only)
- Water cooled furnace, dry bottom
- Two-stage superheater
- RH
- Economizer
- Spray type desuperheater
- Soot blower system
- Air preheaters (Ljungstrom type)
- Coal feeders and pulverizers
- Low NOx Coal burners and natural gas igniters/ warm-up system
- OFA system
- Forced draft (FD) fans
- Primary air (PA) fans
- Induced draft (ID) fans

The following subsections describe the operation of the steam generator.

4.1.2.2 Feedwater and Steam

For the SubC steam system, FW enters the economizer, recovers heat from the combustion gases exiting the steam generator, and then passes to the boiler drum, from where it is distributed to the water wall circuits enclosing the furnace. After passing through the lower and upper furnace circuits and steam drum in sequence, the steam passes through the convection enclosure circuits to the primary superheater and then to the secondary superheater.

The steam then exits the steam generator en route to the HP turbine. Steam from the HP turbine returns to the steam generator as cold reheat and returns to the IP turbine as hot reheat.

For the SC steam system, FW enters the bottom header of the economizer and passes upward through the economizer tube bank, through stringer tubes, which support the primary superheater, and discharges to the economizer outlet headers. From the outlet headers, water flows to the furnace hopper inlet headers via external downcomers. Water then flows upward through the furnace hopper and furnace wall tubes. From the furnace, water flows to the steam water separator. During low load operation (operation below the Benson point), the water from the separator is returned to the economizer inlet with the boiler recirculating pump. Operation at loads above the Benson point is once through.

Steam flows from the separator through the furnace roof to the convection pass enclosure walls, primary superheater, through the first stage of water attemperation, to the furnace platens. From the platens, the steam flows through the second stage of attemperation and then to the intermediate superheater. The steam then flows to the final superheater and on to the outlet pipe terminal. Two stages of spray attemperation are used to provide tight temperature control in all high temperature sections during rapid load changes.

Steam returning from the turbine passes through the primary reheater surface, then through crossover piping containing inter-stage attemperation. The crossover piping feeds the steam to the final reheater banks and then out to the turbine. Inter-stage attemperation is used to provide outlet temperature control during load changes.

4.1.2.3 Air and Combustion Products

Combustion air from the FD fans is heated in Ljungstrom type air preheaters, recovering heat energy from the exhaust gases exiting the boiler. This air is distributed to the burner windbox as secondary air. Air for conveying PC to the burners is supplied by the PA fans. This air is heated in the Ljungstrom type air preheaters to permit drying of the PC, and a portion of the air from the PA fans bypasses the air preheaters to be used for regulating the outlet coal/air temperature leaving the mills.

The PC and air mixture flows to the coal nozzles at various elevations of the furnace. The hot combustion products rise to the top of the boiler and pass through the superheater and reheater sections. The gases then pass through the economizer and air preheater. The gases exit the steam generator at this point and flow to the SCR reactor, DSI manifold, ACI manifold, fabric filter, ID fan, FGD system, and stack.

4.1.2.4 Fuel Feed

The crushed Illinois No. 6 bituminous coal is fed through feeders to each of the mills (pulverizers), where its size is reduced to approximately 72 percent passing 200 mesh and less than 0.5 percent remaining on 50 mesh. [105] The PC exits each mill via the coal piping and is distributed to the coal nozzles in the furnace walls using air supplied by the PA fans.

4.1.2.5 Ash Removal

The furnace bottom comprises several hoppers, with a clinker grinder under each hopper. Each hopper incorporates a dry seal trough and is of welded steel construction, lined with refractory and block insulation for personnel safety and heat retention. Each hopper is paired with a

pneumatic bottom ash transport line and is fully isolatable, with shutoffs downstream of the screw feeder and upstream of the clinker grinder, for ease of maintenance. The description of the balance of the bottom ash handling system is presented in Section 4.1.12. The steam generator incorporates fly ash hoppers under the economizer outlet and air preheater outlet.

4.1.2.6 Burners

A boiler of this capacity employs approximately 24 to 36 coal nozzles arranged at multiple elevations. Each burner is designed as a low-NOx configuration, with staging of the coal combustion to minimize NOx formation. In addition, OFA nozzles are provided to further stage combustion and thereby minimize NOx formation.

Natural gas-fired pilot torches are provided for each coal burner for ignition, warm-up and flame stabilization at startup and low loads.

4.1.2.7 Dry Sorbent Injection

The hydrated lime injection manifold is located directly before the air preheaters. This SO_3 control system is discussed in detail in Section 4.1.6.

4.1.2.8 Air Preheaters

Each steam generator is furnished with two vertical-shaft Ljungstrom regenerative type air preheaters. These units are driven by electric motors through gear reducers.

4.1.2.9 Soot Blowers

The soot-blowing system utilizes an array of 50 to 150 retractable nozzles and lances that clean the furnace walls and convection surfaces with jets of HP steam. The blowers are sequenced to provide an effective cleaning cycle depending on the coal quality and design of the furnace and convection surfaces. Electric motors drive the soot blowers through their cycles.

4.1.3 NOx Control System

The plants are designed to achieve the environmental target of 0.70 lb/MWh-gross. Two measures are taken to reduce the NOx. The first is a combination of LNBs and the introduction of staged OFA in the boiler. The LNBs and OFA reduce the boiler emissions to about 0.15 kg/GJ (0.35 lb/MMBtu). This boiler NOx production rate is equivalent to production rates of 2.8 – 3.3 lb/MWh-gross across the four PC cases considered.

The second measure taken to reduce the NOx emissions is the installation of an SCR system prior to the air heater. SCR uses NH_3 and a catalyst to reduce NOx to N_2 and H_2O. The SCR system consists of three subsystems: reactor vessel, NH_3 storage and injection, and gas flow control. The SCR system is designed for 75–79 percent reduction with 2 ppmv NH_3 slip at the end of the catalyst life.

The SCR capital costs are reported separately from the boiler costs; the cost for the initial load of catalyst is broken out separately in the O&M cost table.

Selective non-catalytic reduction (SNCR) was considered for this application. However, with the installation of the LNBs and OFA system, the boiler exhaust gas contains relatively small amounts of NOx, which makes removal of the quantity of NOx with SNCR to reach the emissions limit difficult. SNCR works better in applications that contain medium to high quantities of NOx and require removal efficiencies in the range of 40–60 percent. Because of the catalyst used, SCR can achieve higher efficiencies with lower concentrations of NOx.

4.1.3.1 SCR Operation Description

The reactor vessel is designed to allow proper retention time for the NH_3 to contact the NOx in the boiler exhaust gas. NH_3 is mixed with dilution air before injection, and the mixture is injected into the gas path immediately prior to entering the reactor vessel. The catalyst contained in the reactor vessel enhances the reaction between the NH_3 and the NOx in the gas. Catalysts consist of various active materials such as titanium dioxide, vanadium pentoxide, and tungsten trioxide. The operating range for vanadium/titanium-based catalysts is 260°C (500°F) to 455°C (850°F). The boiler is equipped with an economizer bypass to provide flue gas to the reactors at the desired temperature during periods of low flow rate, such as low load operation. Also included with the reactor vessel is soot-blowing equipment used for cleaning the catalyst.

The NH_3 storage and injection system consists of the unloading facilities, bulk storage tank, vaporizers, dilution air skid, and injection grid.

The flue gas flow control consists of ductwork, dampers, and flow straightening devices required to route the boiler exhaust to the SCR reactor and then to the air heater. The economizer bypass and associated dampers for low load temperature control are also included.

4.1.4 Activated Carbon Injection

The PAC injection manifold is located directly before the baghouse. [106] This system will be discussed in detail in Section 4.1.6.

4.1.5 Particulate Control

The fabric filter (or baghouse) consists of two separate single-stage, in-line, multi-compartment units. Each unit is of high (0.9–1.5 m/min [3–5 ft/min]) air-to-cloth ratio design with a pulse-jet on-line cleaning system. The ash is collected on the outside of the bags, which are supported by steel cages. The dust cake is removed by a pulse of compressed air. The bag material is polyphenylensulfide with intrinsic Teflon Polytetrafluoroethylene coating. [107] The bags are rated for a continuous temperature of 180°C (356°F) and a peak temperature of 210°C (410°F). Each compartment contains a number of gas passages with filter bags, and heated ash hoppers supported by a rigid steel casing. The fabric filter is provided with necessary control devices, inlet gas distribution devices, insulators, inlet and outlet nozzles, expansion joints, and other items as required.

The use of ACI and DSI increases the calcium content of the fly ash and adds an additional burden to the fabric filter. The addition of calcium is not expected to increase the leaching of

trace metals from the fly ash significantly. The ACI and DSI systems increase the total amount of PM by approximately 14 percent.

Fly ash from bituminous-fired plants (Class F fly ash) is sometimes sold for use as filler material in concrete mixtures. The use of Class F fly ash for concrete manufacture is not as common as the use of Class C fly ash (from high-calcium-containing coals); the latter is more valuable as a replacement for Portland cement in concrete mixtures. Class F fly ash must have a low unburned carbon content to be used in cement mixtures. The inclusion of activated carbon and hydrated lime (or, rather, the calcium sulfate [$CaSO_4$] reaction product) will render the fly ash unsuitable for use in concrete mixtures.

4.1.6 Mercury Removal[i]

Mercury removal is partially achieved through flue gas reactions between mercury and available halogens and carbon.

The fraction of chlorine, and other halogens in the coal, impacts the amount of mercury oxidized in the SCR and air preheater. As oxidized mercury is removed by the fabric filter and wet FGD, the chlorine content of the coal can have a significant impact on the mercury removal rate of the plant. Data presented by Reaction Engineering International suggest that as coal chlorine concentrations increase, up to 500 ppmwd, the fraction of oxidized mercury increases rapidly. However, the rate of mercury oxidation diminishes at chlorine concentrations above 500 ppmwd. [108]

The rate of mercury oxidation is also affected by the NH_3 concentration. Since the SCR is operated more aggressively for NOx control, the NH_3 levels increase and the fraction of oxidized mercury decreases. [109]

In this study, it is assumed that 0.6 percent of the coal carbon is unreacted in the PC boiler. [70] This unburned carbon both promotes mercury oxidation and adsorbs mercury on the surface of the fabric filter. The unburned carbon, combined with the HCl in the flue gas, is sufficient to promote high levels of oxidized mercury and overall Hg removal in the plant. [110]

Depending on the chemistry in the wet FGD, a portion of the oxidized mercury that is captured by the scrubber could be reduced to elemental mercury and re-emitted. By minimizing the amount of mercury entering the wet FGD, and through careful operation of the scrubber, the risk of periodic spikes in mercury re-emissions can be minimized.

Wet FGD parameters such as oxidation reduction potential of the scrubber slurry, halogen concentration in the scrubber slurry, the form of Hg in the slurry (i.e., liquid or solid), and the effect of sulfite concentration were examined by Babcock & Wilcox Enterprises Inc. for their impact on mercury re-emissions. It was concluded that sulfite concentration in the slurry was the most cost-effective parameter that can be controlled as a strategy to minimize mercury re-emission. [111]

[i]Much of the text, descriptions, and images within this section were sourced, with permission, from a quote provided by UCC to NETL, unless otherwise noted. The information relates to a mercury control system designed by UCC. The quote also provided all images credited to them.

Without mitigation, the concentration of SO_3 in the flue gas is estimated to be 59 ppmvd at the air preheater inlet. This elevated SO_3 concentration is the result of combusting a relatively high sulfur coal (2.82 wt%) and from oxidation of SO_2 across the SCR catalyst.

The presence of SO_3 significantly inhibits Hg adsorption, as SO_3 is preferentially adsorbed onto carbon. This effect was demonstrated in a testing program conducted at the Mercury Research Center using an electrostatic precipitator (ESP)-configured system with an ACI rate of 10 lb/MMacf upstream of the air preheater at 300°F, which showed that at SO_3 levels above 20 ppm, less than 50 percent mercury removal was achieved (at SO_3 levels above 10 and 3 ppm, less than 70 and 80 percent mercury removal was achieved, respectively). [112] Therefore, DSI is included in the PC plant designs to reduce the SO_3 levels to approximately 5 ppmvd at the air preheater inlet, as discussed in Section 4.1.6.1.

EPA used a statistical method to calculate the Hg co-benefit capture from units using a "best demonstrated technology" approach, which for bituminous coals was considered to be a combination of a fabric filter and an FGD system. The statistical analysis resulted in a co-benefit capture estimate of 86.7 percent with an efficiency range of 83.8 to 98.8 percent. [113] EPA's documentation for their Integrated Planning Model (IPM) provides mercury emission modification factors (EMF) based on 190 combinations of boiler types and control technologies. The EMF is simply one minus the removal efficiency.

For PC boilers (as opposed to cyclones, stokers, fluidized beds, and 'others') with a fabric filter, SCR and wet FGD, the EMF is 0.1, which corresponds to a removal efficiency of 90 percent; [114] the average reduction in total Hg emissions developed from EPA's Information Collection Request (ICR) data on U.S. coal-fired boilers using bituminous coal, fabric filters, and wet FGD is 98 percent. [115] The referenced sources bound the co-benefit Hg capture for bituminous coal units employing SCR, a fabric filter, and a wet FGD system between 83.8 and 98 percent. It was assumed that the co-benefit potential of the equipment utilized in the PC cases of this report is 90 percent, as it is near the mid-point of the previously mentioned range, and it also matches the value used by EPA in their IPM.

The Hg removal rate required to comply with the Hg emission limit (Section 2.4.3.2) is calculated to be approximately 96–97 percent. Therefore, the potential co-benefit Hg capture rate (90 percent) of the systems utilized in the PC cases is not sufficient to achieve compliance with applicable regulations. A cost and performance estimate was obtained from United Conveyor Corporation (UCC), which applies ACI and DSI to increase the overall Hg removal rate in the plant.

4.1.6.1 Dry Sorbent Injection

Exhibit 4-1 provides data from a full-scale DSI/ACI test conducted by UCC on a midwestern coal-fired unit, which demonstrates the impact of SO_3 concentration (at the PAC injection point) on the PAC injection rate required to achieve a given Hg removal rate. The exhibit and data contained were supplied by UCC in the quote provided to NETL.

Exhibit 4-1. Effect of SO_3 concentration on PAC injection rate

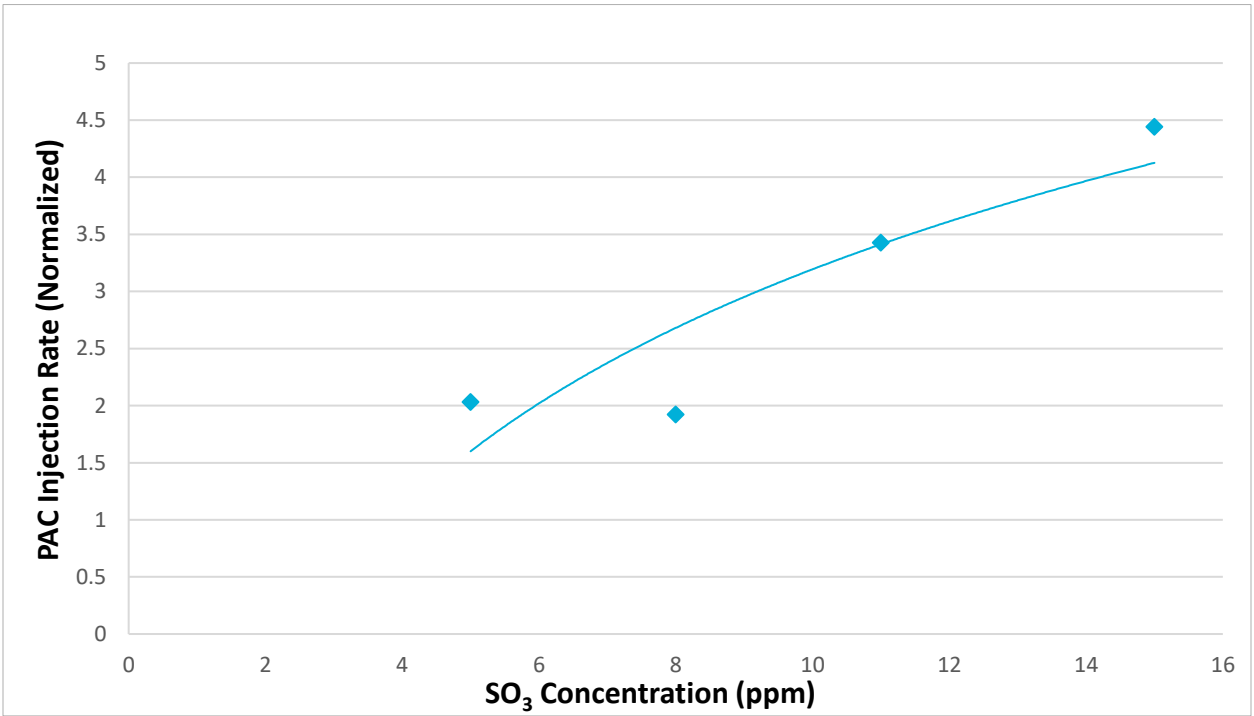

As shown in Exhibit 4-1, higher SO_3 concentrations in the flue gas require significantly greater injection rates of PAC. Therefore, the DSI system considered in this report, with enhanced hydrated lime as the sorbent, targets an SO_3 concentration of 5 ppmvd at the air preheater inlet, with an SO_3 concentration of 2 ppmvd at the outlet of the fabric filter.

As the flue gas temperature must be maintained above the acid dew point temperature in the air preheater, locating the DSI injection point upstream of the air preheater allows for a lower operating temperature (289°F air preheater temperature with DSI upstream versus 337°F air preheater temperature with no DSI/DSI downstream) and higher overall plant efficiency, compared to a plant with no DSI or DSI downstream of the air preheater. Additionally, the reduction in operating temperature increases the Hg removal efficiency of carbon.

Since standard hydrated lime sorbents generally cannot achieve SO_3 removal rates greater than approximately 90 percent, the high level of SO_3 reduction required necessitates the use of an enhanced hydrated lime product to achieve the necessary Hg removal rate.

While DSI is included specifically to remove SO_3 from the flue gas, the enhanced hydrated lime also removes SO_2 and HCl, as shown in Exhibit 4-2. The rates shown are the total removal at the fabric filter outlet/FGD inlet, not the air preheater inlet.

Exhibit 4-2. Pollutant removal efficiency versus hydrated lime injection rate

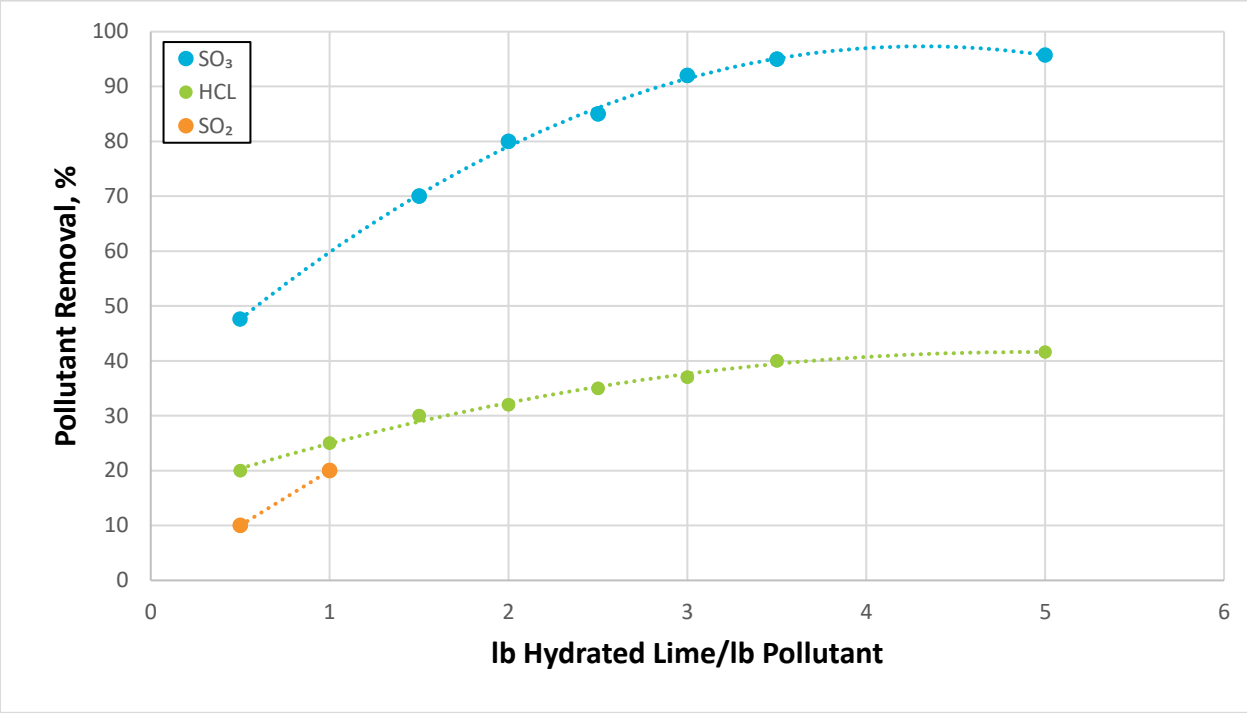

Exhibit 4-2 illustrates that approximately 3.5 lb of enhanced hydrated lime/lb of SO_3 is required to reduce the SO_3 concentration to 2 ppmvd at the outlet of the fabric filter (approximately 96.6 percent removal rate). At this injection rate, the enhanced hydrated lime is expected to also remove approximately 40 percent of HCl. The expected SO_2 reduction is very low, since SO_2 is a much weaker acid gas than SO_3 and HCl. In addition, the baseline SO_2 levels are far higher than either the SO_3 or HCl levels.

Operation Description – As shown in Exhibit 4-3, the DSI system is based on dilute-phase, pneumatic conveying of hydrated lime at a metered rate from a bulk storage silo to the flue gas ductwork where it mixes with the flue gas and reacts with the SO_3 to form $CaSO_4$, which is captured in the fabric filter.

The sorbent is typically delivered in 11,340-kg (25,000-lb) batches by self-unloading pneumatic trucks equipped with manually operated discharge valves. The sorbent is unloaded from the truck via an on-board compressor into the dry, welded-steel storage silo where the displaced air is vented through a silo vent filter. The sorbent level in the silo is measured by system instrumentation.

Silos are typically 14-ft diameter with skirt support, made of CS and are designed to be shipped in one piece. Storage silos are often aerated with dry air through a fluidizing system to ensure reliable feeding. Silos usually have two or more outlets and are equipped with weigh hoppers to provide loss-in-weight (LIW) monitoring and feed control.

The silo roof equipment includes a bin vent filter, relief valve, and level transmitters. The bin vent filter is enabled when the unloading system is started to filter this airflow and vent it to the atmosphere.

Compressed air is delivered to the fluidizing stones located in the chisel bottom of the silo. The fluidizing of the material in conjunction with the 60-degree silo cone promotes mass flow of the sorbent out of the silo.

The fluidized sorbent is then transferred from the silo by a rotary valve into the feeder hopper where it is temporarily stored until conveyed by the screw feeder into the intake tee. The speed of the screw feeder determines the feed rate into the intake tee. Sorbent is fed through the intake tee directly into the conveying air stream.

Exhibit 4-3. Typical DSI injection process flow diagram

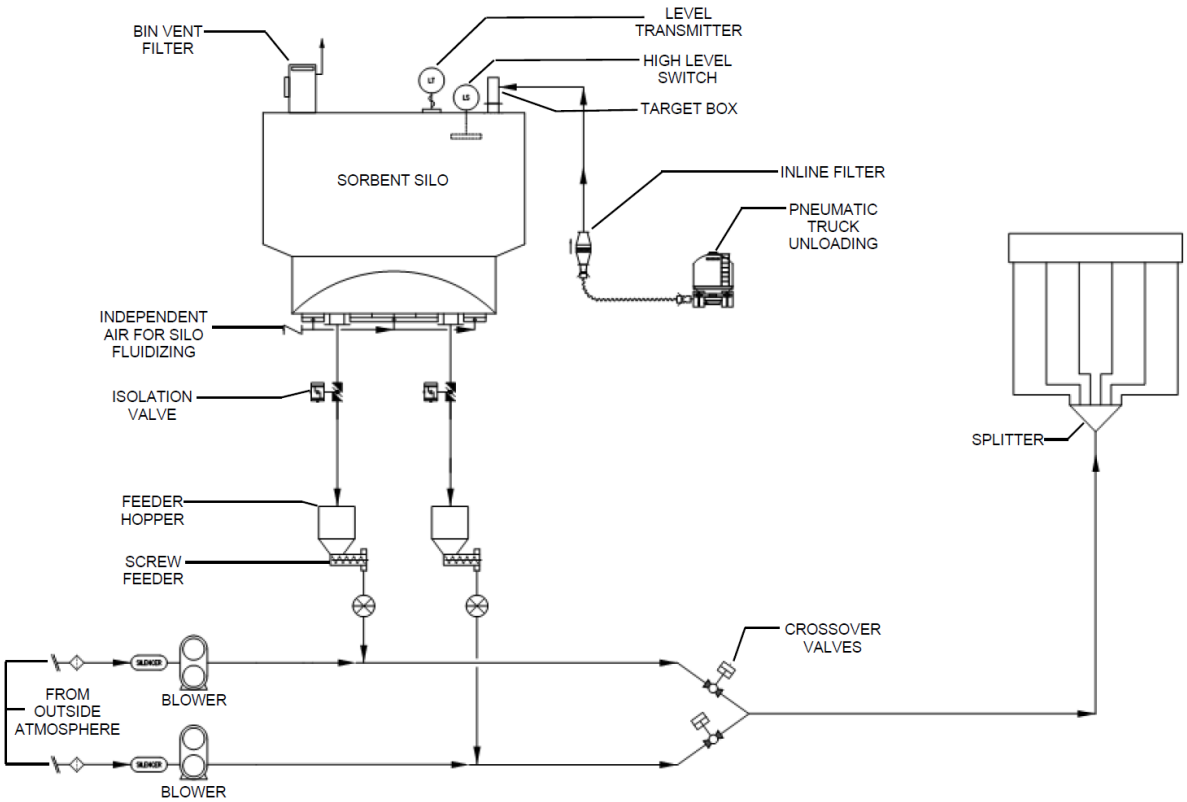

Used with permission from UCC

Material fed from the storage silo typically discharges into one conveying line. The discharge of material is aided by the silo fluidizing system. Each silo discharge line has a CS weigh hopper equipped with load cells. The weigh hopper is vented via a small bin vent filter located on the weigh hopper. The material is metered from the weigh hopper using a variable speed rotary vane feeder.

The silo fluidizing system promotes constant fluid flow to the silo outlet by introducing air through a porous media. Cloth media is in trays on the silo floor and around the outlets. The

pressure blower provides an air stream for conveying sorbent from the storage silo to a splitter and lances for duct injection. Two 100-percent blowers are provided in a typical system for redundancy. Pressure blowers are on non-elevated common bases, and come complete with a v-belt motor, inlet filter, inlet and discharge silencers, discharge check valve, discharge relief valve, discharge pressure gauge, and pressure transmitter.

The conveying lines are mild steel and are provided with a combination of flange and groove-less Victaulic couplings. The conveying line after the splitter is made of a gum rubber material handling hose designed for abrasion resistance.

The DSI system is typically monitored and controlled by the DCS. The feed rate of the system can be adjusted in the following ways:

- Flat Rate (one continuous rate)
- Boiler Load Following (varies feed rate proportional to boiler load)
- Flue Gas Following (varies feed rate proportional to flue gas flow)

4.1.6.2 Activated Carbon Injection

By reducing the SO_3 with DSI (Section 4.1.6.1), most of the Hg will be oxidized in the SCR and removed in the fabric filter and wet FGD. Therefore, only a minimal amount of brominated PAC is injected upstream of the fabric filter to ensure the desired Hg emission rate is achieved.

Exhibit 4-4, provided by UCC, presents a typical performance curve for plants utilizing an SCR and a fabric filter firing bituminous coal. The points highlighted represent 90, 95, and 97 percent Hg removal.

Exhibit 4-4. Mercury removal versus PAC injection rate for Case B12A

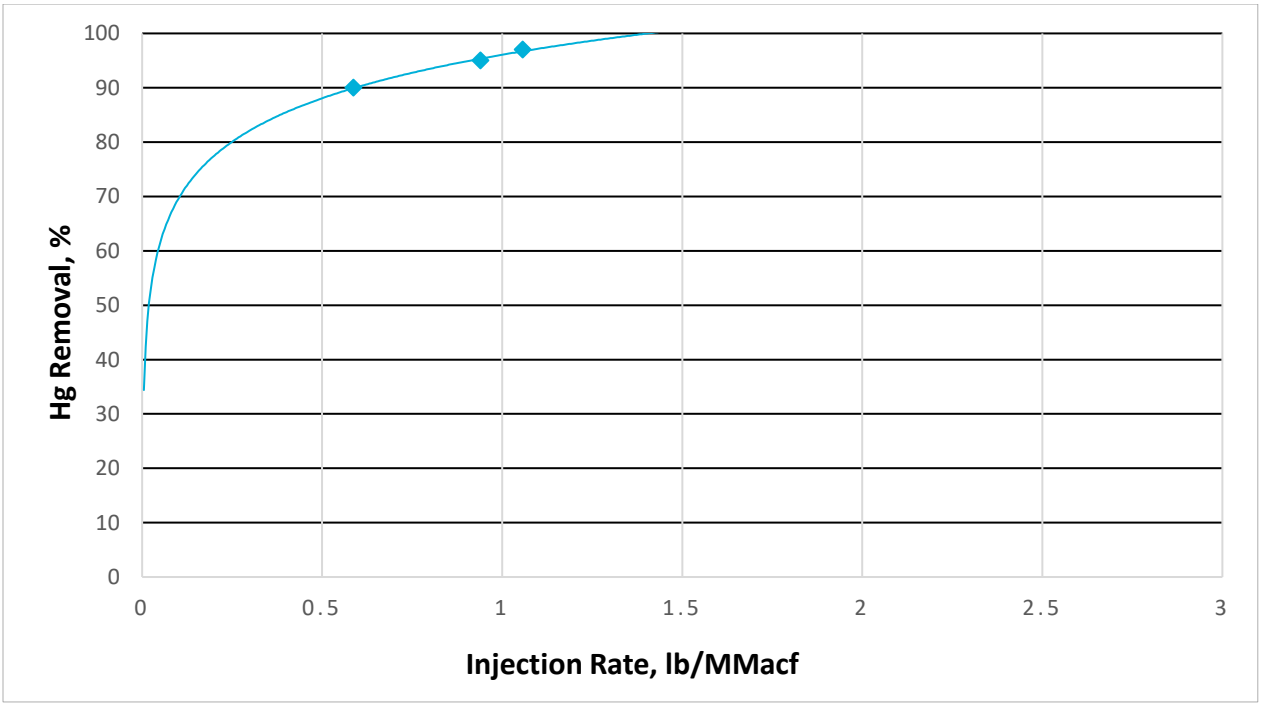

To meet the mercury emission limit, brominated PAC is injected at a rate of approximately 1.0 lb/MMacf in all PC cases.

Operation Description – As shown in Exhibit 4-5, the ACI system is based on dilute-phase, pneumatic conveying of activated carbon at a metered rate from a bulk storage silo to the flue gas ductwork where it mixes with the flue gas and absorbs Hg and SO_3, which is captured in the fabric filter.

The activated carbon is typically delivered in 9,070-kg (20,000-lb) batches by self-unloading pneumatic trucks equipped with manually operated discharge valves. The carbon is unloaded from the truck via an on-board compressor into the dry, welded-steel storage silo where the displaced air is vented through a silo vent filter. The carbon level in the silo is measured by system instrumentation.

Silos are typically 14-ft diameter with skirt support, made of CS and are designed to be shipped in one piece. Storage silos are often aerated with dry air through a fluidizing system to ensure reliable feeding. Silos usually have two or more outlets and are equipped with weigh hoppers to provide LIW monitoring and feed control.

The silo roof equipment includes a bin vent filter, relief valve, and level transmitters. The bin vent filter is enabled when the unloading system is started to filter this airflow and vent it to the atmosphere.

Compressed air is delivered to the fluidizing stones located in the chisel bottom of the silo. The fluidizing of the material in conjunction with the 60-degree silo cone promotes mass flow of the sorbent out of the silo.

The fluidized carbon is then transferred from the silo by a rotary valve into the feeder hopper where it is temporarily stored until conveyed by the screw feeder into the drop tube. The speed of the screw feeder determines the feed rate into the drop tube. Carbon is fed through the drop tube directly into the eductor suction port.

Motive air, provided by low-pressure blowers and fed into the eductors, produces a vacuum at the suction port. This helps draw the carbon and air into the mixing zone directly downstream of the eductor discharge. The carbon is transported through the piping system and is distributed to an array of injection lances specifically designed to disperse the carbon across the cross section of the flue gas ductwork.

Exhibit 4-5. Typical ACI injection process flow diagram

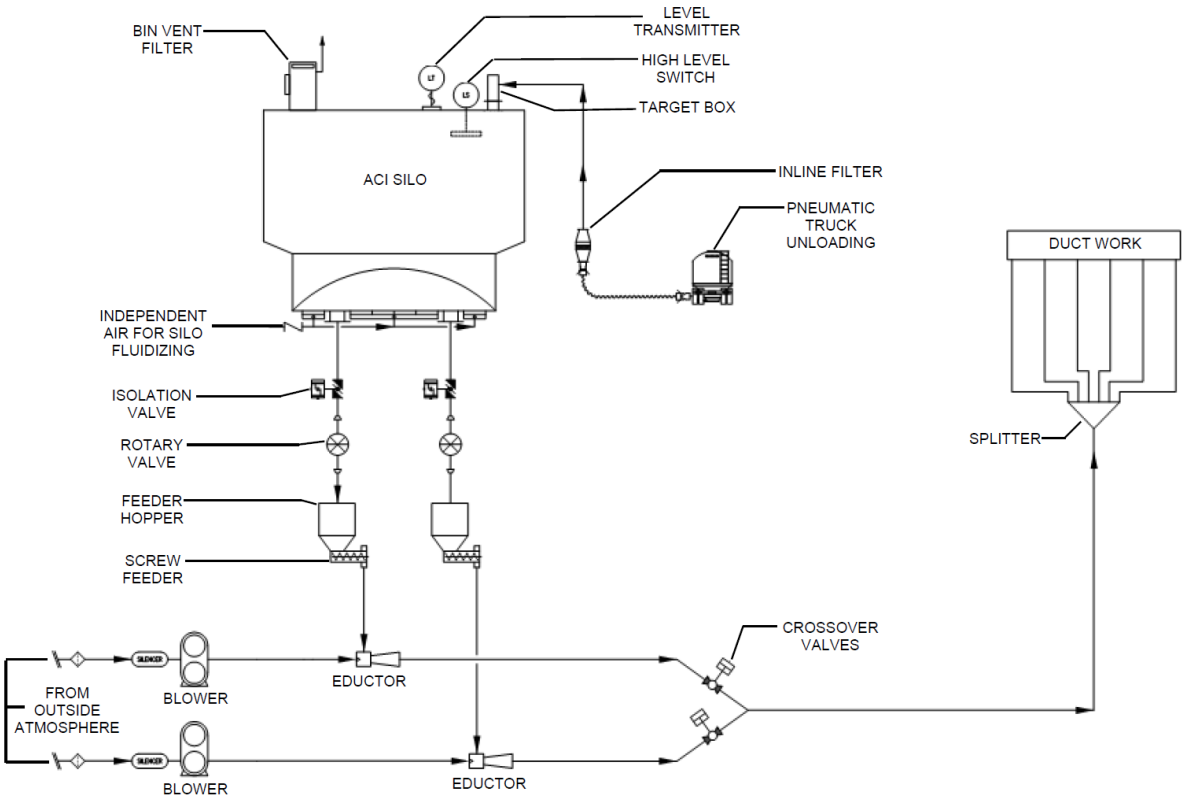

Used with permission from UCC

Material fed from the storage silo typically discharges into one conveying line. The discharge of material is aided by the silo fluidizing system. Each silo discharge line has a CS weigh hopper equipped with load cells. The weigh hopper is vented via a small bin vent filter located on the weigh hopper. The material is metered from the weigh hopper using a screw feeder.

The silo fluidizing systems promotes constant fluid flow to the silo outlet by introducing air through a porous media. Cloth media is in trays on the silo floor and around the outlets.

The pressure blower provides an air stream for conveying carbon from the storage silo to a splitter and lances for duct injection. Two 100 percent blowers are provided in a typical system for redundancy. Pressure blowers are on non-elevated common bases, and come complete with a v-belt motor, inlet filter, inlet and discharge silencers, discharge check valve, discharge relief valve, discharge pressure gauge, and pressure transmitter.

The conveying lines are mild steel and are provided with a combination of flange and groove-less Victaulic couplings. The conveying line after the splitter is made of a gum rubber material handling hose designed for abrasion resistance.

The ACI system is typically monitored and controlled by the DCS. The feed rate of the system can be adjusted in the following ways:

- Flat Rate (one continuous rate)

- Boiler Load Following (varies feed rate proportional to boiler load)
- Flue Gas Following (varies feed rate proportional to flue gas flow)
- Mercury Emission Following (varies feed rate to keep the Hg emission concentration below a given set point)

4.1.7 Flue Gas Desulfurization

The FGD system is a wet limestone forced oxidation positive pressure absorber non-reheat unit, with wet-stack, and gypsum production. The function of the FGD system is to scrub the boiler exhaust gases to remove the SO_2 prior to release to the environment or entering the Carbon Dioxide Recovery (CDR) facility. Sulfur removal efficiency is 98 percent in the FGD unit for all cases. The CDR unit includes a polishing scrubber designed to reduce the flue gas SO_2 concentration from about 37 ppmv at the FGD exit to approximately 2 ppmv prior to the CDR absorber to minimize formation of amine HSS during the CO_2 absorption process. The FGD removal efficiency of HCl is 99 percent for all cases. To minimize the required capacity and cost of specialized FGD wastewater treatment equipment, the FGD system is designed with materials capable of handling up to 20,000 ppm of chlorides.

While the PC cases of this study produce gypsum suitable for wallboard production, changes in coal or limestone characteristics or modifications to the wet FGD or dewatering system could impact the gypsum composition. Exhibit 4-6 provides the specification limits for gypsum used in wallboard and cement production, as well as typical characteristics of landfilled gypsum. The cases in this study do not consider a sale credit or a waste disposal cost for gypsum.

Exhibit 4-6. Typical disposal- and commercial-grade gypsum characteristics and limits

End Use	Disposal*	Wallboard	Cement
Moisture, % max	<20	<10	<14
$CaSO_4 \bullet 2H_2O$, % min	80–95+	>95	85–88
$CaSO_3 \bullet ½H_2O$, % max	<1–2+	0.5–1.0	
SiO_2, % max	<1–3+	1.0	2.0
Fe_2O_3, % max		1.5	1.0
Al_2O_3, % max			1.0
Fly ash, % max	<1–3+	1.0	
Total insolubles, % max	<5–20+	3.5	<15
Water soluble Cl^-, ppm max	2,000–50,000	100–120	50,000
Total dissolved solids, ppm max	5,000–150,000	600	
Mean particle size, µm	<20–90+	20–75	

* Disposal gypsum characteristics are based on a range of potential limestone supplies

The scope of the FGD system is from the outlet of the ID fans to the stack inlet (Cases B11A and B12A) or to the CDR process inlet (Cases B11B and B12B). Exhibit 4-7 provides a process flow

diagram of a typical wet limestone forced oxidation positive pressure absorber non-reheat FGD system. [70] The descriptions in Section 4.1.7.1 through Section 4.1.7.5 align with this diagram.

Exhibit 4-7. Wet flue gas desulfurization process flow diagram

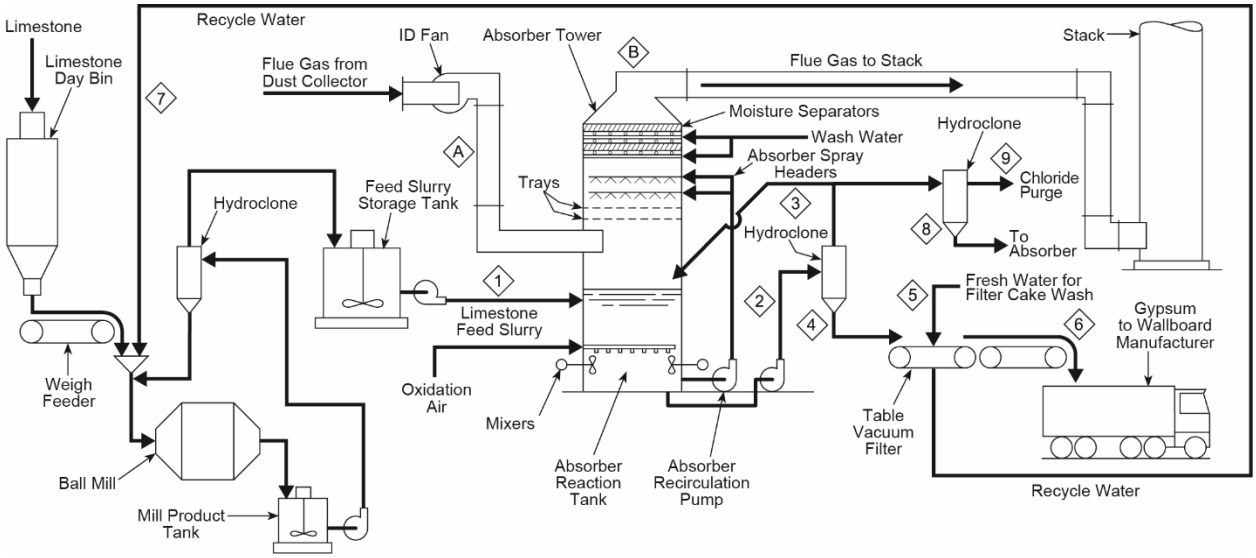

Used with permission from Babcock & Wilcox

4.1.7.1 Limestone Handling and Reagent Preparation System

The function of the limestone reagent preparation system is to grind and slurry the limestone delivered to the plant. The scope of the system is from the day bin up to the limestone feed system. The system is designed to support continuous base load operation.

Operation Description – Each day bin supplies a 100 percent capacity ball mill via a weigh feeder. The wet ball mill accepts the limestone and grinds the limestone to 90 to 95 percent passing 325 mesh (44 microns). Water is added at the inlet to the ball mill to create limestone slurry. The reduced limestone slurry is then discharged into a mill product tank. Mill recycle pumps, two per tank, pump the limestone water slurry to an assembly of hydrocyclones and distribution boxes. The slurry is classified into several streams, based on suspended solids content and size distribution.

The hydrocyclone underflow with oversized limestone is directed back to the mill for further grinding. The hydrocyclone overflow with correctly-sized limestone is routed to a feed slurry storage tank. Reagent distribution pumps direct slurry from the tank to the absorber module.

4.1.7.2 FGD Absorber Tower

The description of the FGD absorber tower follows Exhibit 4-7. Additional detail for the absorber tower cross section is presented in Exhibit 4-8 for reference. [70]

Exhibit 4-8. Cross section of the wet FGD absorber tower

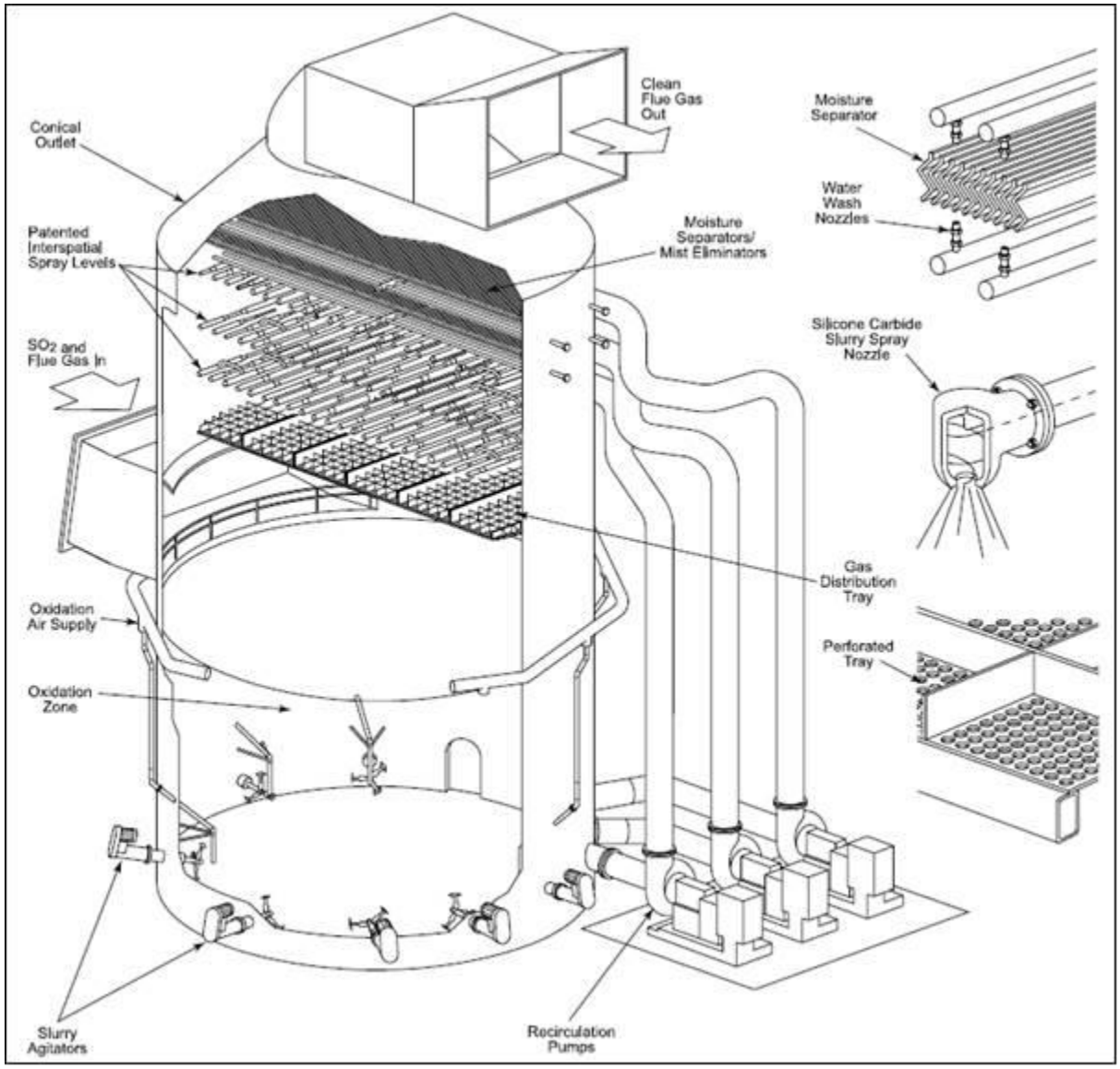

Used with permission from Babcock & Wilcox

Upon entering the bottom of the absorber tower, the gas stream is subjected to an initial quenching spray of reagent. The gas flows upward through the spray zone, which provides enhanced contact between gas and reagent. Multiple spray elevations with header piping and nozzles maintain a consistent reagent concentration in the spray zone. Continuing upward, the reagent-laden gas passes through several levels of moisture separators. These consist of chevron-shaped vanes that direct the gas flow through several abrupt changes in direction, separating the entrained droplets of liquid by inertial effects. The scrubbed flue gas exits at the top of the absorber tower and is routed to the plant stack or CDR process.

The scrubbing slurry falls to the lower portion of the absorber tower, which contains a large inventory of liquid. Oxidation air is added to promote the oxidation of calcium sulfite contained in the slurry to calcium sulfate (gypsum). Multiple agitators (mixers) operate continuously to

prevent settling of solids and enhance mixture of the oxidation air and the slurry. Recirculation pumps recirculate the slurry from the lower portion of the absorber tower to the spray level. Spare recirculation pumps are provided to ensure availability of the absorber.

The absorber chemical equilibrium is maintained by continuous makeup of fresh reagent, and blowdown of byproduct solids via the bleed pumps (not labeled in Exhibit 4-7). A spare bleed pump is provided to ensure availability of the absorber. The byproduct solids are routed to the byproduct dewatering system. The circulating slurry is monitored for pH and density.

Scrubber bypass or reheat, which may be utilized at some older facilities to ensure the exhaust gas temperature is above the saturation temperature, is not employed in this reference plant design because new scrubbers have improved mist eliminator efficiency, and detailed flow modeling of the flue gas through the absorber enables the placement of gutters and drains to intercept moisture that may be present and convey it to a drain. Consequently, raising the exhaust gas temperature above the FGD discharge temperature of 56°C (133°F) is not necessary.

4.1.7.3 Byproduct Dewatering

The function of the byproduct dewatering system is to dewater the bleed slurry from the FGD absorber tower modules. The dewatering process selected for this plant is gypsum dewatering producing wallboard grade gypsum. The scope of the system is from the bleed pump discharge connections to the gypsum storage pile.

Operation Description – The recirculating reagent in the FGD absorber tower accumulates dissolved and suspended solids on a continuous basis as byproducts from the SO_2 absorption process. Maintenance of the quality of the recirculating slurry requires that a portion be withdrawn and replaced by fresh reagent. This is accomplished on a continuous basis by the bleed pumps pulling off byproduct solids and the reagent distribution pumps supplying fresh reagent to the absorber.

Gypsum (calcium sulfate) is produced by the injection of O_2 into the calcium sulfite produced in the absorber tower sump. The bleed from the absorber contains approximately 20 wt% gypsum. The absorber slurry is pumped by an absorber bleed pump to a primary dewatering hydrocyclone cluster. The primary hydrocyclone performs two process functions. The first function is to dewater the slurry from 20 wt% to 50 wt% solids. The second function of the primary hydrocyclone is to perform a $CaCO_3$ and $CaSO_4 \bullet 2H_2O$ separation. This process ensures an overall limestone stoichiometry of 1.03. This system reduces the overall operating cost of the FGD process. The underflow from the hydrocyclone flows into the filter feed tank (not shown in Exhibit 4-7), from which it is pumped to a horizontal belt vacuum filter (represented as a table vacuum filter in Exhibit 4-7). Two 100 percent filter systems are provided for redundant capacity.

4.1.7.4 Hydrocyclones

The hydrocyclone is a simple and reliable device (no moving parts) designed to increase the slurry concentration in one step to approximately 50 wt%. This high slurry concentration is necessary to optimize operation of the vacuum belt filter.

The hydrocyclone feed enters tangentially and experiences centrifugal motion so that the heavy particles move toward the wall and flow out the bottom. Some of the lighter particles collect at the center of the cyclone and flow out the top. The underflow is thus concentrated from 20 wt% at the feed to 50 wt%.

Multiple hydrocyclones are used to process the bleed stream from the absorber. The hydrocyclones are configured in a cluster with a common feed header. The system has two hydrocyclone clusters, each with five 15 cm (6 in.) diameter units. Four cyclones are used to continuously process the bleed stream at design conditions, and one cyclone is spare.

Cyclone overflow and underflow are collected in separate launders. The overflow from the hydrocyclones contains about 5 wt% solids, consisting of gypsum, fly ash, and limestone residues and is sent back to the absorber.

The remainder of the overflow is fed to a secondary hydrocyclone, where the resulting underflow is returned to the absorber and the overflow is blown down to the process water treatment system, for chloride control (represented as chloride purge in Exhibit 4-7). The flow to the secondary hydrocyclones is controlled to maintain a chloride concentration of 20,000 ppmw in the blowdown.

The underflow of the primary hydrocyclones flows into the filter feed tank from where it is pumped to the horizontal belt vacuum filters.

4.1.7.5 Horizontal Vacuum Belt Filters

The secondary dewatering system consists of horizontal vacuum belt filters. The pre-concentrated gypsum slurry (50 wt%) is pumped to an overflow pan through which the slurry flows onto the vacuum belt. As the vacuum is pulled, a layer of cake is formed. The cake is dewatered to approximately 90 wt% solids as the belt travels to the discharge. At the discharge end of the filter, the filter cloth is turned over a roller where the solids are dislodged from the filter cloth. This cake falls through a chute onto the pile prior to the final byproduct uses. The required vacuum is provided by a vacuum pump. The filtrate is collected in a filtrate tank that provides surge volume for use of the filtrate in grinding the limestone. Filtrate that is not used for limestone slurry preparation is returned to the absorber.

4.1.7.6 FGD Wastewater Quality

The blowdown stream from the FGD process must be treated under the ELG rule, as stated in Section 2.4.2. The design wastewater composition for the FGD process blowdown considered is provided in Exhibit 4-9. The design water quality is based on a survey of plants burning bituminous, high sulfur coal [116] [117] and on internal information from Black & Veatch projects. Exhibit 4-9 includes a range of values, an average, and the final selected composition.

Exhibit 4-9. FGD process wastewater quality

Parameter	FGD Wastewater (Range)	FGD Wastewater (Average)	FGD Wastewater (Final)
pH	5.5–7.4	6.6	7.2
Chemical O_2 demand, ppm	304–1,060	682	350
Biological O_2 demand, ppm	21–1,370	422	500
Specific Conductance, µS/cm	5,990–32,000	9,595	32,000
Ammonia as N, ppm	1.5–31.5	8.4	10
Suspended Solids, ppm	4,970–25,300	13,888	15,000
Total Dissolved Solids, ppm	4,740–44,600	21,310	43,494
Chloride as Cl, ppm	832–28,800	9,966	20,000
Sulfate as SO_4, ppm	1,290–11,900	4,212	7,600
Calcium as Ca, ppm	751–5,370	2,791	5,370
Magnesium as Mg, ppm	176–7,000	2,728	6,000
Sodium as Na, ppm	59–5,340	998	2900
Boron (total), ppm	3.0–626	220	430
Potassium as K, ppm	35–684	226	250
M-Alkalinity as $CaCO_3$, ppm[1]	131–625	275	200
Iron (total), ppm	3.4–824	200	290
Aluminum (total), ppm	1.0–289	93	150
Silica as SiO_2, ppm	1–91	33	100
Manganese (total), ppm	1.58–225	32.1	60
Nitrate/Nitrite as N, ppm	1.0–54.5	20.5	30
Total Kjeldahl N_2, ppm	6.2–51.6	19.2	20
Carbon, ppm			8
Phosphorus, ppm	0.05–10.5	4.61	7
Nickel (total), ppm	0.447–6.0	2.05	5
Selenium (total), ppm	0.651–8.66	2.75	5
Zinc (total), ppm	0.31–9.04	3.23	6
Barium (total), ppm	0.588–11.900	3.330	5
Titanium (total), ppm	0.377–8.18	2.57	4
Vanadium (total), ppm	0.078–1.58	0.67	1.3
Fluorine, ppm			1
Arsenic (total), ppm	0.0599–3.000	0.799	1.4

Parameter	FGD Wastewater (Range)	FGD Wastewater (Average)	FGD Wastewater (Final)
Copper (total), ppm	0.0376–2.130	0.788	1.4
Lead (total), ppm	0.0312–4.000	0.896	1.3
Molybdenum (total), ppm	0.065–1.340	0.59	0.9
Mercury (total), ppm	0.0164–1.070	0.255	0.7
Chromium, ppm	0.176–1.380	0.777	1
Cobalt, ppm			0.1
Lithium, ppm			0.1
Beryllium (total), ppm	0.0036–3.000	0.438	0.140
Cadmium (total), ppm	0.00484–0.238	0.0728	0.140
Thallium (total), ppm	0.00633–0.300	0.0864	0.140
Antimony (total), ppm	0.00923–0.0518	0.0269	0.040
Uranium, ppm			0.03
Thorium, ppm			0.02
Tin, ppm			0.01

[1]Alkalinity is reported as $CaCO_3$ equivalent, rather than the concentration of HCO_3. The concentration of HCO_3 can be obtained by dividing the alkalinity by 0.82.

The wastewater composition reported in Exhibit 4-9 is based on water qualities from actual operations and adjusted to account for chloride. The design concentration of each constituent is individually representative of a plant configuration comparable to those in this study. However, due to the interaction and interdependencies of each constituent and the multitude of potential species, the wastewater quality cannot be considered representative as a whole. The wastewater quality is intended to inform users of the contaminants likely present, and at what concentrations they may be expected, to facilitate appropriate equipment selection and design.

The FGD process blowdown wastewater composition will be dependent on several factors, including composition of the coal, makeup water quality, flue gas treatment systems upstream of the FGD process, and other factors. The wastewater quality defined above will form the basis for discussion of the Spray Dryer Evaporator system, discussed in Section 4.1.10.

4.1.8 Carbon Dioxide Recovery Facility[j]

A CDR facility is used, along with compressors and a dryer, in cases B11B and B12B to remove 90 percent of the CO_2 in the flue gas exiting the FGD unit. The facility then purifies it and compresses it to a SC condition. The flue gas exiting the FGD unit contains about 1 percent more CO_2 than the raw flue gas because of the CO_2 liberated from the limestone in the FGD

[j] Much of the text and descriptions within this section were sourced, with permission, from data provided by Shell Cansolv to NETL, unless otherwise noted. The information relates to a CO_2 removal system designed by Shell Cansolv.

absorber tower. The CDR comprises the pre-scrubber, CO_2 absorber, CO_2 stripper, and solvent reclaiming unit.

The CO_2 recovery process for cases B11B and B12B is based on data provided by Shell Cansolv in 2016. A typical flowsheet is shown in Exhibit 4-10. This process is designed to recover high-purity CO_2 from LP streams that contain O_2, such as flue gas from coal-fired power plants, CT exhaust gas, and other waste gases.

Exhibit 4-10. Cansolv CO_2 capture process typical flow diagram for PC

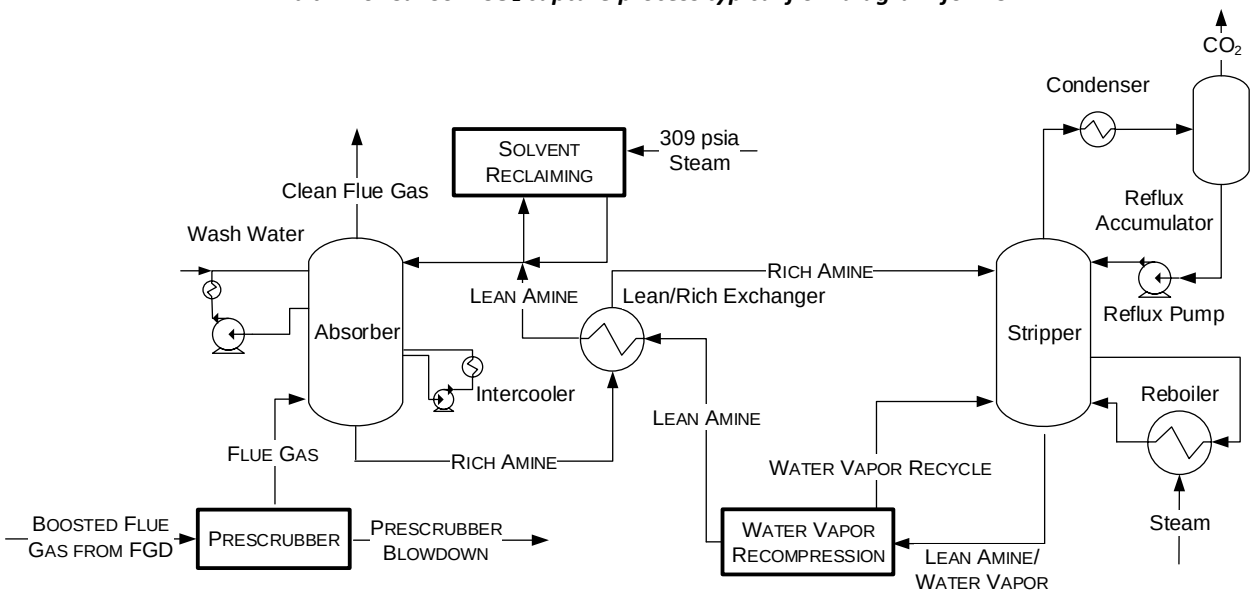

4.1.8.1 Pre-scrubber Section

The flue gas from the FGD section is sent through a booster fan to drive the gas through downstream equipment starting with the pre-scrubber inlet cooling section. The cooler is operated as a direct contact cooler that saturates and sub-cools the flue gas. Saturation and sub-cooling are beneficial to the system as they improve the amine absorption capacity, thus reducing amine circulation rate. After the cooling section, the flue gas is scrubbed with caustic in the pre-scrubber sulfur polishing section. This step reduces the SO_2 concentration entering the CO_2 absorber column to 2 ppmv.

4.1.8.2 CO_2 Absorber Section

The Cansolv absorber is a single, rectangular, acid resistant, lined concrete structure containing stainless-steel packing.

There are four packed sections in the Cansolv absorber. The first three are used for CO_2 absorption, and the final section is a water-wash section. This specific absorber geometry and design provides several cost advantages over more traditional column configurations while maintaining equivalent or elevated performance. The flue gas enters the absorber and flows counter-current to the Cansolv solvent. Approximately 90 percent of the inlet CO_2 is absorbed into the lean solvent, and the remaining CO_2 exits the main absorber section and enters the water-wash section of the absorber. Prior to entering the bottom packing section, hot amine is

collected, removed, and pumped through a HX to provide intercooling and limit water losses. The cooled amine is then sent back to the absorber just above the final packed section.

The water-wash section at the top of the absorber is used to remove volatiles or entrained amine from the flue gas, as well as to condense and retain water in the system. The wash water is removed from the bottom of the wash section, pumped through a HX, and is then re-introduced at the top of the wash section. This wash water is made up of recirculated wash water as well as water condensed from the flue gas. The flue gas treated in the water-wash section is then released to atmosphere.

4.1.8.3 Amine Regeneration Section

The rich amine is collected at the bottom of the absorber and pumped through multiple parallel rich/lean HXs where heat from the lean amine is exchanged with the rich amine. The Cansolv rich/lean solvent HXs are a stainless-steel plate and frame type with a 5°C (9°F) approach temperature. Additional options for heat integration in the Cansolv system include a second HX after the rich/lean solvent HX where LP steam condensate from the regenerator reboiler or intermediate-pressure (IP) steam condensate from the amine purification section may be used to further pre-heat the rich solvent. The rich amine continues and enters the stripper near the top of the column. The stripper is a stainless-steel vessel using structured stainless-steel packing. The regenerator reboiler indirectly uses LP steam to produce water vapor that flows upwards, counter-current to the rich amine flowing downwards, and removes CO_2 from the amine. The Cansolv regenerator reboiler is a stainless-steel plate and frame type with a 3°C (5°F) approach temperature. Lean amine is collected in the stripper bottoms and flows to a flash vessel where water vapor is released. Simultaneously, the condensate leaving the reboiler flows to a separate flash vessel, and water vapor is released. The water vapor recovered from both flash vessels is combined, and then recompressed and injected into the bottom of the stripper to enhance stripping of CO_2 within the column, thus reducing the amount of reboiler steam otherwise required. The lean amine is then pumped through the same rich/lean HX to exchange heat from the lean amine to the rich amine and continues to the lean amine tank.

The water vapor and stripped CO_2 flow up the stripper where they are contacted with recycled reflux to condense a portion of the vapor. The remaining gas continues to the condenser where it is partially condensed. The two-phase mixture then flows to a reflux accumulator where the CO_2 product gas is separated and sent to the CO_2 compressor at approximately 0.2 MPa (29 psia), and the remaining water is collected and returned to the stripper as reflux.

The flow of steam to the regenerator reboiler is proportional to the rich amine flow to the stripper; however, the flow of low-pressure steam is also dependent on the stripper top temperature. For the steady-state case described here, the low-pressure steam requirement for the reboiler only is calculated as approximately 2.4 MJ/kg (1,050 Btu/lb) CO_2 for the Cansolv process, which is satisfied by extracting steam from the crossover pipe between the IP and LP sections of the steam turbine.

4.1.8.4 Amine Purification Section

The purpose of the amine purification section is to remove a portion of the HSS as well as ionic and non-ionic amine degradation products. The Cansolv amine purification process is performed in batch.

4.1.8.4.1 Thermal Reclaimer

The ionic and non-ionic amine degradation products are removed in the thermal reclaimer by distilling a slipstream—taken from the lean amine exiting the lean amine flash vessel, and prior to the lean solvent pump—under vacuum conditions to separate the water and amine. This process leaves the non-ionic degradation products in the bottom, which are pumped to a storage tank, diluted and cooled with process water, and then disposed. The condensed amine and water are returned to the lean amine tank.

4.1.9 Gas Compression and Drying System

The compression system was modeled based on vendor supplied data, similar in design to that presented in the Carbon Capture Simulation Initiative's paper "Centrifugal Compressor Simulation User Manual." [58] The design is assumed to be an eight-stage front-loaded centrifugal compressor with stage discharge pressures presented in Exhibit 4-11.

Exhibit 4-11. CO_2 compressor interstage pressures

Stage	Outlet Pressure, MPa (psia)	Stage Pressure Ratio
1	0.44 (64)	2.22
2	0.92 (134)	2.14
3	1.73 (251)	1.90
4	3.05 (443)	1.78
5	4.59 (667)	1.58
6	6.99 (1,014)	1.53
7	10.38 (1,505)	1.49
8	15.29 (2,217)	1.47

Intercooling is included for each stage with the first three stages including water knockout. A CO_2 product aftercooler is also included to cool the CO_2 to 30°C (86°F). CO_2 transportation and storage costs assume that the CO_2 enters the transport pipeline as a dense phase liquid; thus, a pipeline inlet temperature of 30°C (86°F) is considered. Since both PC cases with CO_2 capture utilize the Cansolv system, the compressor CO_2 suction pressure is identical, and the enthalpy versus pressure operating profile shown in Exhibit 4-12 is representative of both cases. Data points representing compression stage discharge pressures are labeled with the compression stage number (e.g., C1). Intercooling temperatures for the final two intercooling stages (after compression stages six and seven) were selected to provide a suitable buffer between the compressor operating profile and SC CO_2 dome. The base assumption that cooling water is

available at a temperature of 60°F from the cooling tower is not a limiting factor in selection of these two stages' intercooling temperatures. Enthalpy reference conditions are 0.01°C and 0.0006 MPa (32.02°F and 0.089 psia), the same as those used for stream table results. The CO_2 aftercooler is not represented in the compressor operating profile plot.

Exhibit 4-12. PC CO_2 compressor enthalpy versus pressure operating profile

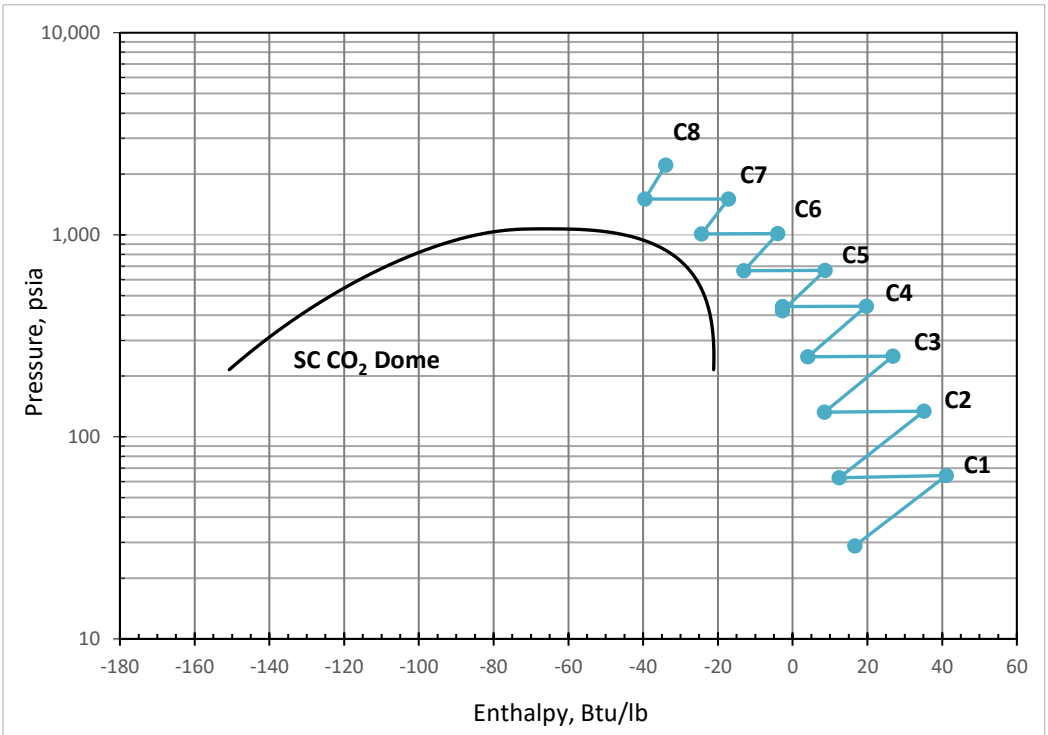

A TEG dehydration unit is included between stages 4 and 5, operating at 3.04 MPa (441 psia), to reduce the moisture concentration of the CO_2 stream to 500 ppmv. The dryer is designed based on a paper published by the Norwegian University of Science and Technology. [59]

In an absorption process, such as in a TEG dehydration unit, the gas containing water flows up through a column while the TEG flows downward. The solvent binds the water by physical absorption; water is more soluble in the solvent than in other components of the gas mixture. The dried gas exits at the top of the column while the solvent, rich in water, exits at the bottom. After depressurization to around atmospheric pressure, the solvent is regenerated by heating it and passing it through a regeneration column where the water is boiled off. A TEG unit is capable of reducing water concentrations to meet the QGESS design point of 500 ppmv. [60]

Several alternatives to rejecting the heat of CO_2 compression to cooling water were investigated in a separate study. [118] The first alternative consisted of using a portion of the heat to pre-heat BFW while the remaining heat was still rejected to cooling water. This configuration resulted in an increase in net plant efficiency of 0.3 percentage points (absolute). The second alternative modified the CO_2 compression intercooling configuration to enable integration into a LiBr-H_2O absorption refrigeration system, where water is the refrigerant. This configuration

resulted in a net plant efficiency increase of 0.1 percentage points (absolute) and reduced the number of CO_2 compression stages necessary from eight to five.

It was concluded that the small increase in efficiency did not justify the added cost and operational complexity of the two configurations considered; hence, they were not incorporated into the base design.

4.1.10 Process Water Systems

4.1.10.1 Process Water Sources

As discussed in Section 2.4.2, the only system in the PC cases producing a wastewater stream that must be treated for compliance with the ELG rule is the wet FGD. A detailed process description of the wet FGD is provided in Section 4.1.7.

4.1.10.2 Process Water Treatment

The updated ELG rule established FGD wastewater as a new category, with discharge limits that must be met. The FGD wastewater is sourced from the overflow of the secondary hydrocyclone, as described in Section 4.1.7.3, with a composition described in Section 4.1.7.6.

Unlike in IGCC cases, the water recovered from the flue gas in PC cases with CO_2 capture is partially discharged from the plant. While the ELG rule does not regulate this water and therefore it does not need to be treated, the discharge of this water removes PC cases with CO_2 capture from qualifying for the ZLD designation.

A variety of technologies are currently installed at PC plants to treat FGD wastewater, including surface impoundments, chemical precipitation, biological treatment, ZLD operating practices, evaporation ponds, and constructed wetlands. Approximately 37 percent of PC plants currently utilize ZLD operating practices. [119] [116]

While multiple process configurations were assessed for feasibility of complying with the ELG, given this study's intention of maintaining general applicability of the cases presented, and the prevalence of utilizing ZLD operating practices in existing PC plants, systems that would enable ZLD were selected in all cases, specifically a spray dryer evaporator (SDE).

4.1.10.2.1 Spray Dryer Evaporator

A spray dryer is a technology commonly used in the power industry for FGD, which can also be applied as a thermal evaporation process to treat wastewater. An SDE has been constructed and is currently operating at Kansas City Power & Light's Iatan Plant Unit 2. Operation of the SDE has been described as straightforward, with periodic maintenance performed. [120] The feasibility of using an SDE as the sole treatment system in PC cases is limited by the flow rate of wastewater, as the cost and performance impact of the spray dryer increases with increasing wastewater flow rate. Typically, a spray dryer for FGD wastewater is limited to approximately 150–200 gpm, depending on the flue gas conditions. As the system is designed based on flow rate, the solids concentration of the FGD wastewater does not impact the sizing of the system.

Spray dryers typically require a flue gas temperature above 316°C (600°F). A slipstream of flue gas is taken upstream of the air preheater for use as the heat source to evaporate the wastewater, which is sprayed into a tall cylindrical vessel using rotary atomizers. The heat from the slipstream is used to evaporate the wastewater, which contains dissolved and suspended solids, to produce a humidified gas stream containing additional suspended particulates. All the suspended particulates are assumed to exit the spray dryer vessel. The humidified gas stream is returned downstream of the air preheater and the combined flue gas passes through a baghouse, which removes most of the suspended solids.

Exhibit 4-13 provides a simplified BFD of the spray dryer evaporation process.

Exhibit 4-13. Spray dryer block flow diagram

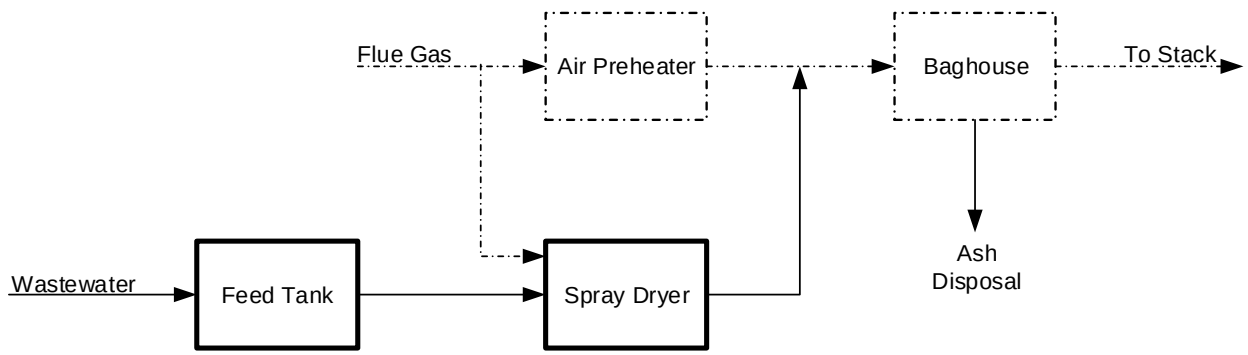

The atomizers and the spray dryer vessel are designed so that the wastewater mist droplets are evaporated before reaching the vessel wall. Therefore, the vessel is constructed of CS without concerns for corrosion. However, the wall metal temperature must be monitored to ensure there is no temperature drop, which is an indication that moisture is reaching the wall and can cause corrosion issues.

4.1.10.2.2 Alternative Treatment Methods

There are several alternative treatment options for compliance with the ELG rule, spanning a range of technology maturation on a technology readiness scale. Of the more mature routes, deep-well injection and evaporation ponds were also considered. Summary descriptions of these treatment options are provided in Section 3.1.12.2.4.

4.1.11 Power Generation

The steam turbine is designed for long-term operation (90 days or more) at MCR with throttle control valves 95 percent open. It is also capable of a short-term 5 percent OP/VWO condition (16 hours).

For the SubC cases, the steam turbine is a tandem compound type, consisting of HP-IP-two LP (double flow) sections enclosed in three casings, designed for condensing single reheat operation, and equipped with non-automatic extractions and four-flow exhaust. The turbine drives a H_2-cooled generator. The turbine has DC motor-operated lube oil pumps, and main lube oil pumps, which are driven off the turbine shaft. [121] The exhaust pressure is 50.8 cm

(2 in.) Hg in the single pressure condenser. There are seven extraction points. The condenser is two-shell, transverse, single pressure with divided waterbox for each shell.

The steam-turbine generator systems for the SC plants are similar in design to the SubC systems. The differences include steam cycle conditions and steam extractions points. The SubC design has seven steam extraction points for both capture and non-capture cases, whereas the capture SC plant has only seven extraction points and the non-capture SC plant has eight extraction points. The reason for the difference between the two SC plants (B12A and B12B) is discussed in Section 4.1.12.

Turbine bearings are lubricated by a CL, water-cooled pressurized oil system. Turbine shafts are sealed against air in-leakage or steam blowout using a labyrinth gland arrangement connected to a LP steam seal system. The generator stator is cooled with a CL water system consisting of circulating pumps, shell and tube or plate and frame type HXs, filters, and deionizers, all skid-mounted. The generator rotor is cooled with a H_2 gas recirculation system using fans mounted on the generator rotor shaft.

Operation Description – The turbine stop valves, control valves, reheat stop valves, and intercept valves are controlled by an electro-hydraulic control system. Main steam from the boiler passes through the stop valves and control valves and enters the turbine at the conditions provided in Exhibit 4-14.

Exhibit 4-14. PC steam conditions

Steam Conditions		
Steam Parameter	**SubC**	**SC**
Main Pressure, MPa (psig)	16.5 (2,400)	24.1 (3,500)
Main Temperature, °C (°F)	566 (1,050)	593 (1,100)
Reheat Temperature, °C (°F)	566 (1,050)	593 (1,100)

The steam initially enters the turbine near the middle of the HP span, flows through the turbine, and returns to the boiler for reheating. The reheat steam flows through the reheat stop valves and intercept valves and enters the IP section at the conditions provided in Exhibit 4-14. After passing through the IP section, the steam enters a crossover pipe, which transports the steam to the two LP sections. The steam divides into four paths and flows through the LP sections exhausting downward into the condenser. The last stages of the LP sections operate as condensing turbines with an exhaust moisture content ranging from 9.2 percent to 9.5 percent.

The turbine is designed to operate at constant inlet steam pressure over the entire load range.

4.1.12 Balance of Plant

The balance of plant components consist of the condensate, FW, main and reheat steam, extraction steam, ash handling, ducting and stack, waste treatment and miscellaneous systems as described below.

4.1.12.1 Condensate

The function of the condensate system is to pump condensate from the condenser hotwell to the deaerator and through the LP FW heaters. Each system consists of one main condenser; two variable speed electric motor-driven vertical condensate pumps each sized for 50 percent capacity; four LP heaters (three in Case B12B); and one deaerator with storage tank.

Condensate is delivered to a common discharge header through two separate pump discharge lines, each with a check valve and a gate valve. A common minimum flow recirculation line discharging to the condenser is provided downstream of the gland steam condenser to maintain minimum flow requirements for the gland steam condenser and the condensate pumps.

LP FW heaters 1 through 4 are 50 percent capacity, parallel flow, and are in the condenser neck. All remaining FW heaters are 100 percent capacity, shell and U-tube HXs. Each LP FW heater is provided with inlet/outlet isolation valves and a full capacity bypass. LP FW heater drains cascade down to the next lowest extraction pressure heater and finally discharge into the condenser. Pneumatic level control valves control normal drain levels in the heaters. High heater level dump lines discharging to the condenser are provided for each heater for turbine water induction protection. Pneumatic level control valves control dump line flow.

While Case B11B returns all process extraction steam (CO_2 capture and drying requirements) condensate to the deaerator, the SC Case B12B requires this condensate to be returned after the condenser upstream of the condensate polisher. This is required because the SC cases do not have a blowdown stream. If the condensate was returned to the deaerator, there would be a buildup of contaminants. An impact of this design is that the SC capture case (B12B) requires only three LP FW heaters rather than four, as the condensate return increases the FW temperature above that which would be exiting the first LP FW heater.

4.1.12.2 Feedwater

The function of the FW system is to pump the FW from the deaerator storage tank through the HP FW heaters to the economizer. One turbine-driven BFW pump sized at 100 percent capacity is provided to pump FW through the HP FW heaters. One 25 percent motor-driven BFW pump is provided for startup. The pumps are provided with inlet and outlet isolation valves, and individual minimum flow recirculation lines discharging back to the deaerator storage tank. The recirculation flow is controlled by automatic recirculation valves, which are a combination check valve in the main line and in the bypass, bypass control valve, and flow sensing element. The suction of the boiler feed pump is equipped with startup strainers, which are utilized during initial startup and following major outages or system maintenance.

Each HP FW heater is provided with inlet/outlet isolation valves and a full capacity bypass. FW heater drains cascade down to the next lowest extraction pressure heater and finally discharge into the deaerator. Pneumatic level control valves control normal drain level in the heaters. High heater level dump lines discharging to the condenser are provided for each heater for turbine water induction protection. Dump line flow is controlled by pneumatic level control valves.

The deaerator is a horizontal, spray tray type with internal direct contact stainless steel (SS) vent condenser and storage tank.

The boiler feed pump turbine is driven by main steam up to 60 percent plant load. Above 60 percent load, extraction from the IP turbine exhaust provides steam to the boiler feed pump steam turbine.

4.1.12.3 Main and Reheat Steam

The function of the main steam system is to convey main steam from the boiler superheater outlet to the HP turbine stop valves. The function of the reheat system is to convey steam from the HP turbine exhaust to the boiler reheater and from the boiler reheater outlet to the IP turbine stop valves.

Main steam exits the boiler superheater through a motor-operated stop/check valve and a motor-operated gate valve and is routed in a single line feeding the HP turbine.

Cold reheat steam exits the HP turbine, flows through a motor-operated isolation gate valve and a flow control valve, and enters the boiler reheater. Hot reheat steam exits the boiler reheater through a motor-operated gate valve and is routed to the IP turbine.

4.1.12.4 Extraction Steam

The function of the extraction steam system is to convey steam from turbine extraction points through the following routes:

- From HP turbine extraction to heater 7 (and 8 in SC cases)
- From IP turbine extraction to heater 6 and the deaerator (heater 5)
- From LP turbine extraction to heaters 1, 2, 3, and 4

The turbine is protected from overspeed on turbine trip, from flash steam reverse flow from the heaters through the extraction piping to the turbine. This protection is provided by positive closing, balanced disc, non-return valves located in all extraction lines except the lines to the LP FW heaters in the condenser neck. The extraction non-return valves are located only in horizontal runs of piping and as close to the turbine as possible.

The turbine trip signal automatically trips the non-return valves through relay dumps. The remote manual control for each heater level control system is used to release the non-return valves to normal check valve service when required to restart the system.

4.1.12.5 Circulating Water System

It is assumed that the plant is serviced by a public water facility and has access to groundwater for use as makeup cooling water with minimal pretreatment. All filtration and treatment of the circulating water are conducted on site. A mechanical draft, wood frame, counter-flow cooling tower is provided for the circulating water heat sink. Two 50 percent CWPs are provided. The CWS provides cooling water to the condenser, the auxiliary cooling water system, and the CDR facility and CO_2 compressors in capture cases.

The auxiliary cooling water system is a CL system. Plate and frame HXs with circulating water as the cooling medium are provided. This system provides cooling water to the lube oil coolers, turbine generator, boiler feed pumps, etc. All pumps, vacuum breakers, air release valves, instruments, controls, etc., are included for a complete operable system.

The CDR and CO_2 compression systems in cases B11B and B12B require a substantial amount of cooling water that is provided by the PC plant CWS. The additional cooling loads imposed by the CDR and CO_2 compressors are reflected in the significantly larger CWPs and cooling tower in those cases.

4.1.12.6 Ash Handling System

The function of the ash handling system is to provide the equipment required for conveying, preparing, storing, and disposing of the fly ash and bottom ash produced on a daily basis by the boiler, along with the hydrated lime and activated carbon injected for mercury control (discussed in Section 4.1.6), and dissolved solids from the SDE that are disposed of with the fly ash (discussed in Section 4.1.10.2.1). The scope of the system is from the baghouse hoppers, air heater and economizer hopper collectors, and bottom ash hoppers to the separate bottom ash/fly ash storage silos and truck filling stations. The system is designed to support short-term operation at the 5 percent OP/VWO condition (16 hours) and long-term operation at the 100 percent guarantee point (90 days or more).

The fly ash collected in the baghouse and the air heaters is conveyed to the fly ash storage silo. A pneumatic transport system using LP air from a blower provides the transport mechanism for the fly ash. Fly ash is discharged through a wet unloader, which conditions the fly ash and conveys it through a telescopic unloading chute into a truck for disposal.

As mentioned in Section 4.1.5, the use of ACI and DSI increases the calcium content of the fly ash and adds an additional burden to the fabric filter. The addition of calcium is not expected to increase the leaching of trace metals from the fly ash significantly. The ACI and DSI systems increase the total amount of PM by approximately 26 percent.

The bottom ash from the boiler is fed into a series of dry storage hoppers, each equipped with a clinker grinder. The clinker grinder is provided to break up any clinkers that may form. Accumulated bottom ash discharged from the hoppers passes through the clinker grinder, then to a screw feeder and finally to a pneumatic ash conveying system for transport to the bottom ash silos, before being transferred to trucks for offsite disposal.

Ash from the economizer hoppers is pneumatically conveyed to the fly ash storage silos(s) and pyrites (rejected from the coal pulverizers) are conveyed using water on a periodic basis to the dewatering system (i.e., dewatering bins) for offsite removal by truck.

The wet sluicing for the pyrite system is not an explicit requirement of the National Fire Protection Association (NFPA), but it is viewed as a risk mitigation measure to avoid accidental ignition of combustible materials clinging to the mill rejects. This can also come into effect when a mill trips and the contained solids need to be safely removed from the mills. Wet sluicing of the mill rejects further reduces potential ignition of this coal that is being swept from the mills. The water used for wet sluicing is regarded as low volume wastewater, which is not specifically

regulated under the ELG rule, and is assumed to be treated for the pyrites within the plant's standard low volume wastewater treatment facility described in Section 4.1.12.8.

4.1.12.7 Ducting and Stack

One stack is provided with a single fiberglass-reinforced plastic (FRP) liner. The stack is constructed of reinforced concrete and is 152 m (500 ft) high for adequate particulate dispersion.

4.1.12.8 Waste Treatment/Miscellaneous Systems

An onsite water treatment facility treats all runoff, cleaning wastes, blowdown, and backwash. It is anticipated that the treated water will be suitable for discharge into existing systems and be within EPA standards for suspended solids, oil and grease, pH, and miscellaneous metals.

The waste treatment system is minimal and consists, primarily, of neutralization and oil/water separators (along with the associated pumps, piping, etc.).

Miscellaneous systems consisting of fuel oil, service air, instrument air, and service water are provided. A storage tank provides a supply of No. 2 fuel oil used for a small auxiliary boiler; start-up fuel is assumed to be natural gas. Fuel oil is delivered by truck. All truck roadways and unloading stations inside the fence area are provided.

4.1.12.9 Buildings and Structures

Foundations are provided for the support structures, pumps, tanks, and other plant components. The following buildings are included in the design basis:

- Steam turbine building
- Boiler building
- Administration and service building
- Makeup water and pretreatment building
- Fuel oil pump house
- Coal crusher building
- Continuous emissions monitoring building
- Pump house and electrical equipment building
- Guard house
- Runoff water pump house
- Industrial waste treatment building
- FGD system building

4.1.13 Accessory Electric Plant

The accessory electric plant consists of switchgear and control equipment, generator equipment, station service equipment, conduit and cable trays, and wire and cable. It also includes the main power transformer, required foundations, and standby equipment.

4.1.14 Instrumentation and Control

An integrated plant-wide control and monitoring DCS is provided. The DCS is a redundant microprocessor-based, functionally distributed system. The control room houses an array of multiple video monitor and keyboard units. The monitor/keyboard units are the primary interface between the generating process and operations personnel. The DCS incorporates plant monitoring and control functions for all the major plant equipment. The DCS is designed to provide 99.5 percent availability. The plant equipment and the DCS are designed for automatic response to load changes from minimum load to 100 percent. Startup and shutdown routines are implemented as supervised manual procedures, with operator selection of modular automation routines available.

4.1.15 Performance Summary Metrics

This section details the methodologies of several metrics reported in the performance summaries of the PC cases.

Steam Generator Efficiency

The steam generator efficiency is equal to the amount of heat transferred in the boiler divided by the thermal input provided by the coal. This calculation is represented by the equation:

$$SGE = \frac{BH}{CH}$$

Where:

SGE – steam generator efficiency

BH – boiler thermal output

CH – coal thermal input

The heat transferred in the boiler is calculated in the Aspen models, and the thermal input of the coal is the product of the coal feed rate and the heating value of the coal.

4.1.15.1 Steam Turbine Efficiency

The steam turbine efficiency is calculated by taking the steam turbine power produced and dividing it by the difference between the thermal input and thermal consumption. This calculation is represented by the equation:

$$STE = \frac{STP}{(TI - TC)}$$

Where:

STE – steam turbine efficiency

STP – steam turbine power

TI – thermal input

TC – thermal consumption

The thermal input is considered to be the main steam.

The thermal consumption is only present in the capture cases. It is the enthalpy difference between the streams extracted for the capture and CO_2 dryer systems and the condensate returned to the condenser (steam extraction – condensate return).

4.1.15.2 Steam Turbine Heat Rate

The steam turbine heat rate is calculated by taking the inverse of the steam turbine efficiency. This calculation is represented by the equation:

$$STHR = \frac{1}{STE} * 3{,}412$$

Where:

STHR – steam turbine heat rate, Btu/kWh

STE – steam turbine efficiency, fraction

4.2 SUBCRITICAL PC CASES

This section contains an evaluation of plant designs for cases B11A and B11B, which are based on a SubC PC plant with a nominal net output of 650 MWe. Both plants use a single reheat 16.5 MPa/566°C/566°C (2,400 psig/1,050°F/1,050°F) cycle. The main difference between the two configurations is that Case B11B includes CO_2 capture while Case B11A does not.

The balance of this section is organized as follows:

- Key Assumptions is a summary of study and modeling assumptions relevant to cases B11A and B11B.
- Sparing Philosophy is provided for both cases B11A and B11B.
- Process and System Description provides an overview of the technology operation as applied to Case B11A. The systems that are common to all PC cases were covered in Section 4.1 and only features that are unique to Case B11A are discussed further in this section.
- Performance Results provides the main modeling results from Case B11A, including the performance summary, environmental performance, carbon/sulfur balances, water balance, mass and energy balance diagrams and energy balance table.
- Equipment List provides an itemized list of major equipment for Case B11A with account codes that correspond to the cost accounts in the Cost Estimates section.
- Cost Estimates provides a summary of capital and operating costs for Case B11A.
- Process and System Description, Performance Results, Equipment List and Cost Estimates are discussed for Case B11B.

4.2.1 Key System Assumptions

System assumptions for cases B11A and B11B, SubC PC with and without CO_2 capture, are compiled in Exhibit 4-15.

Exhibit 4-15. SubC PC plant study configuration matrix

	Case B11A w/o CO_2 Capture	Case B11B w/CO_2 Capture
Steam Cycle, MPa/°C/°C (psig/°F/°F)	16.5/566/566 (2,400/1,050/1,050)	
Coal	Illinois No. 6	
Condenser pressure, mm Hg (in. Hg)	50.8 (2)	
Boiler Efficiency, HHV %	88	
Carbon Conversion, %	99.4	
Cooling water to condenser, °C (°F)	16 (60)	
Cooling water from condenser, °C (°F)	27 (80)	
Stack temperature, °C (°F)	57 (134)	30 (87)
SO_2 Control	Wet Limestone Forced Oxidation	
FGD Efficiency, %[A]	98	98[B, C]
FGD Blowdown Treatment (Effluent Limitation Guidelines)	Spray dryer evaporator	
NOx Control	LNB w/OFA, SCR	
SCR Efficiency, %[A]	76.1	79.0
Ammonia Slip (end of catalyst life), ppmv	2	
Particulate Control	Fabric Filter	
Fabric Filter efficiency, %[A]	99.9	
Ash Distribution, Fly/Bottom	80%/20%	
SO_3 Control	DSI	
Mercury Control	Co-benefit Capture and ACI	
CO_2 Control	N/A	Cansolv
Overall Carbon Capture[A]	N/A	90%
CO_2 Sequestration	N/A	Off-site Saline Formation

[A]Removal efficiencies are based on the flue gas content.
[B]A SO_2 polishing step is included to meet more stringent SOx limits in the flue gas (~2 ppmv) to reduce formation of amine HSS during the CO_2 absorption process.
[C]SO_2 exiting the post-FGD polishing step is absorbed in the CO_2 capture process making stack emissions negligible.

4.2.1.1 Balance of Plant – Case B11A and Case B11B

The balance of plant assumptions are common to both cases and are presented in Exhibit 4-16.

Exhibit 4-16. Balance of plant assumptions

Parameter	Value
Cooling System	Recirculating Wet Cooling Tower
Fuel and Other Storage	
Coal	30 days
Ash	30 days
Gypsum	30 days
Limestone	30 days
Hydrated lime	7 days
Activated carbon	7 days
Plant Distribution Voltage	
Motors below 1 hp	110/220 V
Motors between 1 hp and 250 hp	480 V
Motors between 250 hp and 5,000 hp	4,160 V
Motors above 5,000 hp	13,800 V
Steam and CT generators	24,000 V
Grid Interconnection voltage	345 kV
Water and Wastewater	
Makeup Water	The water supply is 50 percent from a local POTW and 50 percent from groundwater and is assumed to be in sufficient quantities to meet plant makeup requirements Makeup for potable, process, and DI water is drawn from municipal sources
Process Wastewater	Storm water that contacts equipment surfaces is collected and treated for discharge through a permitted discharge
Sanitary Waste Disposal	Design includes a packaged domestic sewage treatment plant with effluent discharged to the industrial wastewater treatment system. Sludge is hauled off site. Packaged plant is sized for 5.68 cubic meters per day (1,500 gallons per day)
Water Discharge	Blowdown will be treated for chloride and metals and discharged

4.2.2 Sparing Philosophy

Single trains are used throughout the design with exceptions where equipment capacity requires an additional train. There is no redundancy other than normal sparing of rotating equipment. The plant design consists of the following major subsystems:

- One dry-bottom, wall-fired SubC PC boiler (1 x 100 percent)
- Two SCR reactors (2 x 50 percent)

- One DSI system (1 x 100 percent)
- One ACI system (1 x 100 percent)
- Two single-stage, in-line, multi-compartment fabric filters (2 x 50 percent)
- One wet limestone forced oxidation positive pressure absorber (1 x 100 percent)
- One steam turbine (1 x 100 percent)
- For Case B11B only, one CO_2 absorption system, consisting of an absorber, stripper, and ancillary equipment (1 x 100 percent) and two CO_2 compression systems (2 x 50 percent)

4.2.3 Process Description

In this section the SubC PC process without CO_2 capture is described. The system description follows the BFD in Exhibit 4-17 and stream numbers reference the same exhibit. Exhibit 4-18 provides process data for the numbered streams in the BFD.

Coal (stream 8) and PA (stream 4) are introduced into the boiler through the wall-fired burners. Additional combustion air, including the OFA, is provided by the FD fans (stream 1). The boiler operates at a slight negative pressure so air leakage is into the boiler, and the infiltration air is accounted for in stream 7. Streams 3 and 6 show Ljungstrom air preheater leakages from the FD and PA fan outlet streams to the boiler exhaust.

Flue gas exits the boiler through the SCR reactor where NH_3 is injected to reduce NOx compounds, followed by hydrated lime injection (stream 10) for the reduction of SO_3. A small flue gas stream is extracted for use in the spray dryer evaporator (stream 11). The flue gas then passes through the combustion air preheater (where the air preheater leakages are introduced) and is cooled to 143°C (289°F) (stream 12) before PAC is injected (stream 13) for mercury reduction. The flue gas then passes through a fabric filter for particulate removal (stream 16). An ID fan increases the flue gas temperature to 153°C (309°F) and provides the motive force for the flue gas (stream 17) to pass through the FGD unit. FGD inputs and outputs include makeup water (stream 18), oxidation air (stream 19), limestone slurry (stream 23) and product gypsum (stream 21). The clean, saturated flue gas exiting the FGD unit (stream 20) passes to the plant stack and is discharged to the atmosphere. The FGD blowdown (stream 22) is sent to the SDE where extracted flue gas (stream 11) is used to evaporate the FGD blowdown stream. The SDE outlet gas stream is recombined into the flue gas path after the air preheater, and before PAC injection.

Exhibit 4-17. Case B11A block flow diagram, SubC unit without CO_2 capture

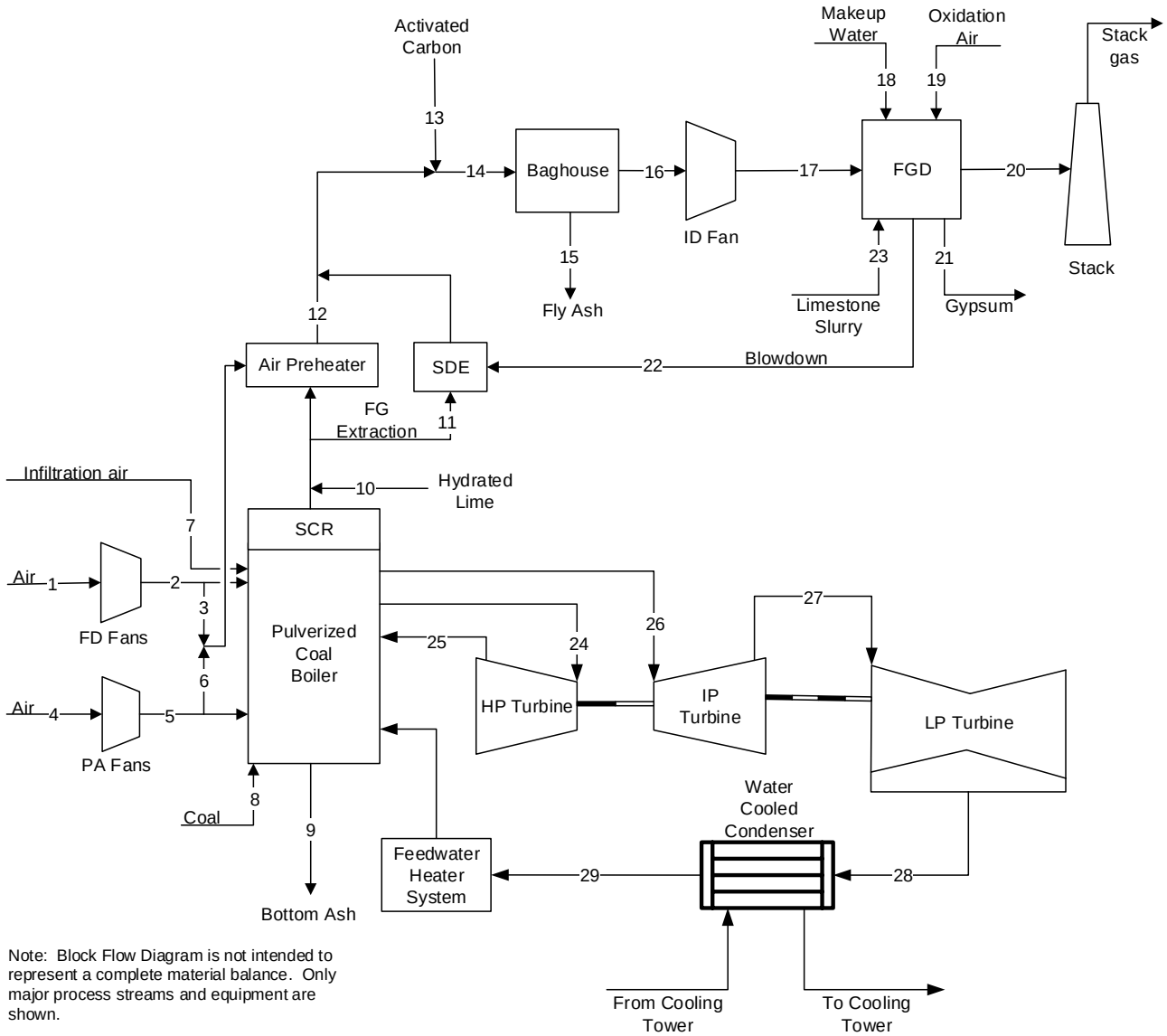

Note: Block Flow Diagram is not intended to represent a complete material balance. Only major process streams and equipment are shown.

Exhibit 4-18. Case B11A stream table, SubC unit without capture

	1	2	3	4	5	6	7	8	9	10	11	12	13	14	15
V-L Mole Fraction															
Ar	0.0092	0.0092	0.0092	0.0092	0.0092	0.0092	0.0092	0.0000	0.0000	0.0000	0.0087	0.0088	0.0000	0.0087	0.0000
CO_2	0.0003	0.0003	0.0003	0.0003	0.0003	0.0003	0.0003	0.0000	0.0000	0.0000	0.1457	0.1379	0.0000	0.1372	0.0000
H_2	0.0000	0.0000	0.0000	0.0000	0.0000	0.0000	0.0000	0.0000	0.0000	0.0000	0.0000	0.0000	0.0000	0.0000	0.0000
H_2O	0.0099	0.0099	0.0099	0.0099	0.0099	0.0099	0.0099	0.0000	0.0000	1.0000	0.0879	0.0837	0.0000	0.0911	0.0000
HCl	0.0000	0.0000	0.0000	0.0000	0.0000	0.0000	0.0000	0.0000	0.0000	0.0000	0.0001	0.0001	0.0000	0.0001	0.0000
N_2	0.7732	0.7732	0.7732	0.7732	0.7732	0.7732	0.7732	0.0000	0.0000	0.0000	0.7318	0.7340	0.0000	0.7281	0.0000
O_2	0.2074	0.2074	0.2074	0.2074	0.2074	0.2074	0.2074	0.0000	0.0000	0.0000	0.0237	0.0336	0.0000	0.0329	0.0000
SO_2	0.0000	0.0000	0.0000	0.0000	0.0000	0.0000	0.0000	0.0000	0.0000	0.0000	0.0021	0.0020	0.0000	0.0020	0.0000
SO_3	0.0000	0.0000	0.0000	0.0000	0.0000	0.0000	0.0000	0.0000	0.0000	0.0000	0.0000	0.0000	0.0000	0.0000	0.0000
NaCl	0.0000	0.0000	0.0000	0.0000	0.0000	0.0000	0.0000	0.0000	0.0000	0.0000	0.0000	0.0000	0.0000	0.0000	0.1142
$CaCl_2$	0.0000	0.0000	0.0000	0.0000	0.0000	0.0000	0.0000	0.0000	0.0000	0.0000	0.0000	0.0000	0.0000	0.0001	0.8858
Total	1.0000	1.0000	1.0000	1.0000	1.0000	1.0000	1.0000	0.0000	0.0000	1.0000	1.0000	1.0000	0.0000	1.0000	1.0000
V-L Flowrate (kg_{mol}/hr)	60,848	60,848	1,802	18,692	18,692	2,572	1,345	0	0	1	4,008	81,341	0	86,027	5
V-L Flowrate (kg/hr)	1,755,885	1,755,885	52,007	539,389	539,389	74,234	38,811	0	0	12	119,192	2,415,360	0	2,547,098	551
Solids Flowrate (kg/hr)	0	0	0	0	0	0	0	223,189	4,499	1,216	963	18,489	48	19,690	19,703
Temperature (°C)	15	19	19	15	25	25	15	15	1,316	15	385	143	15	143	143
Pressure (MPa, abs)	0.10	0.11	0.11	0.10	0.11	0.11	0.10	0.10	0.10	0.10	0.10	0.10	0.10	0.10	0.10
Steam Table Enthalpy (kJ/kg)[A]	30.23	34.36	34.36	30.23	40.78	40.78	30.23	---	---	---	---	---	---	---	---
AspenPlus Enthalpy (kJ/kg)[B]	-97.58	-93.45	-93.45	-97.58	-87.03	-87.03	-97.58	-2,119.02	1,267.06	-13,402.95	-2,261.17	-2,394.16	-6.79	-2,452.91	-1,065.84
Density (kg/m^3)	1.2	1.2	1.2	1.2	1.3	1.3	1.2	---	---	1,003.6	0.5	0.9	---	0.9	2,150.2
V-L Molecular Weight	28.857	28.857	28.857	28.857	28.857	28.857	28.857	---	---	18.015	29.742	29.694	---	29.608	104.985
V-L Flowrate (lb_{mol}/hr)	134,147	134,147	3,973	41,208	41,208	5,671	2,965	0	0	2	8,835	179,326	0	189,656	12
V-L Flowrate (lb/hr)	3,871,063	3,871,063	114,655	1,189,150	1,189,150	163,657	85,564	0	0	27	262,774	5,324,957	0	5,615,390	1,214
Solids Flowrate (lb/hr)	0	0	0	0	0	0	0	492,047	9,919	2,682	2,122	40,760	106	43,410	43,439
Temperature (°F)	59	66	66	59	78	78	59	59	2,400	59	726	289	59	289	289
Pressure (psia)	14.7	15.3	15.3	14.7	16.1	16.1	14.7	14.7	14.6	14.7	14.6	14.4	14.7	14.4	14.4
Steam Table Enthalpy (Btu/lb)[A]	13.0	14.8	14.8	13.0	17.5	17.5	13.0	---	---	---	---	---	---	---	---
AspenPlus Enthalpy (Btu/lb)[B]	-42.0	-40.2	-40.2	-42.0	-37.4	-37.4	-42.0	-911.0	544.7	-5,762.2	-972.1	-1,029.3	-2.9	-1,054.6	-458.2
Density (lb/ft^3)	0.076	0.078	0.078	0.076	0.081	0.081	0.076	---	---	62.650	0.034	0.053	---	0.053	134.233

[A]Steam table reference conditions are 32.02°F & 0.089 psia

[B]Aspen thermodynamic reference state is the component's constituent elements in an ideal gas state at 25°C and 1 atm

Exhibit 4-18. Case B11A stream table, SubC unit without capture (continued)

	16	17	18	19	20	21	22	23	24	25	26	27	28	29
V-L Mole Fraction														
Ar	0.0087	0.0087	0.0000	0.0092	0.0081	0.0000	0.0000	0.0000	0.0000	0.0000	0.0000	0.0000	0.0000	0.0000
CO_2	0.1372	0.1372	0.0000	0.0003	0.1246	0.0001	0.0000	0.0000	0.0000	0.0000	0.0000	0.0000	0.0000	0.0000
H_2	0.0000	0.0000	0.0000	0.0000	0.0000	0.0000	0.0000	0.0000	0.0000	0.0000	0.0000	0.0000	0.0000	0.0000
H_2O	0.0911	0.0911	0.9967	0.0099	0.1497	0.9998	0.9943	0.9999	1.0000	1.0000	1.0000	1.0000	1.0000	1.0000
HCl	0.0001	0.0001	0.0000	0.0000	0.0000	0.0000	0.0000	0.0000	0.0000	0.0000	0.0000	0.0000	0.0000	0.0000
N_2	0.7281	0.7281	0.0000	0.7732	0.6812	0.0000	0.0000	0.0000	0.0000	0.0000	0.0000	0.0000	0.0000	0.0000
O_2	0.0329	0.0329	0.0000	0.2074	0.0364	0.0000	0.0000	0.0000	0.0000	0.0000	0.0000	0.0000	0.0000	0.0000
SO_2	0.0020	0.0020	0.0000	0.0000	0.0000	0.0000	0.0000	0.0000	0.0000	0.0000	0.0000	0.0000	0.0000	0.0000
SO_3	0.0000	0.0000	0.0000	0.0000	0.0000	0.0000	0.0000	0.0000	0.0000	0.0000	0.0000	0.0000	0.0000	0.0000
NaCl	0.0000	0.0000	0.0005	0.0000	0.0000	0.0001	0.0009	0.0001	0.0000	0.0000	0.0000	0.0000	0.0000	0.0000
$CaCl_2$	0.0000	0.0000	0.0028	0.0000	0.0000	0.0000	0.0048	0.0000	0.0000	0.0000	0.0000	0.0000	0.0000	0.0000
Total	1.0000	1.0000	1.0000	1.0000	1.0000	1.0000	1.0000	1.0000	1.0000	1.0000	1.0000	1.0000	1.0000	1.0000
V-L Flowrate (kg_{mol}/hr)	86,021	86,021	11,824	3,601	96,040	202	678	2,799	103,745	96,833	96,833	81,933	65,427	83,193
V-L Flowrate (kg/hr)	2,546,535	2,546,535	216,354	103,913	2,761,567	3,648	12,546	50,434	1,868,994	1,744,473	1,744,473	1,476,042	1,178,685	1,498,750
Solids Flowrate (kg/hr)	0	0	1,950	0	0	32,816	191	21,590	0	0	0	0	0	0
Temperature (°C)	143	154	27	15	57	15	57	15	566	355	566	267	38	39
Pressure (MPa, abs)	0.10	0.11	0.10	0.10	0.10	0.10	0.10	0.10	16.65	4.28	4.19	0.52	0.01	1.32
Steam Table Enthalpy (kJ/kg)[A]	287.72	299.40	---	30.23	294.95	---	---	---	3,473.89	3,098.44	3,593.58	2,994.07	2,340.01	162.43
AspenPlus Enthalpy (kJ/kg)[B]	-2,463.93	-2,452.26	-15,763.31	-97.58	-2,930.88	-12,513.34	-15,496.40	-14,994.25	-12,506.41	-12,881.86	-12,386.71	-12,986.23	-13,640.29	-15,817.87
Density (kg/m^3)	0.8	0.9	1,002.5	1.2	1.1	881.2	979.6	1,003.7	47.7	16.0	11.1	2.1	0.1	993.3
V-L Molecular Weight	29.603	29.603	18.298	28.857	28.754	18.021	18.495	18.019	18.015	18.015	18.015	18.015	18.015	18.015
V-L Flowrate (lb_{mol}/hr)	189,645	189,645	26,068	7,939	211,733	446	1,495	6,171	228,718	213,480	213,480	180,631	144,242	183,410
V-L Flowrate (lb/hr)	5,614,148	5,614,148	476,980	229,089	6,088,214	8,043	27,659	111,188	4,120,426	3,845,905	3,845,905	3,254,116	2,598,555	3,304,179
Solids Flowrate (lb/hr)	0	0	4,300	0	0	72,348	421	47,598	0	0	0	0	0	0
Temperature (°F)	289	309	80	59	134	59	134	59	1,050	671	1,050	512	101	101
Pressure (psia)	14.2	15.3	14.7	14.7	14.8	14.7	14.7	14.7	2,414.7	620.5	608.1	75.0	1.0	190.7
Steam Table Enthalpy (Btu/lb)[A]	123.7	128.7	---	13.0	126.8	---	---	---	1,493.5	1,332.1	1,545.0	1,287.2	1,006.0	69.8
AspenPlus Enthalpy (Btu/lb)[B]	-1,059.3	-1,054.3	-6,777.0	-42.0	-1,260.1	-5,379.8	-6,662.3	-6,446.4	-5,376.8	-5,538.2	-5,325.3	-5,583.1	-5,864.3	-6,800.5
Density (lb/ft^3)	0.052	0.055	62.582	0.076	0.067	55.009	61.156	62.658	2.975	1.000	0.692	0.132	0.003	62.010

[A]Steam table reference conditions are 32.02°F & 0.089 psia

[B]Aspen thermodynamic reference state is the component's constituent elements in an ideal gas state at 25°C and 1 atm

4.2.4 Case B11A – Performance Results

The plant produces a net output of 650 MWe at a net plant efficiency of 38.6 percent (HHV basis). Overall performance for the plant is summarized in Exhibit 4-19. Exhibit 4-20 provides a detailed breakdown of the auxiliary power requirements.

Exhibit 4-19. Case B11A plant performance summary

Performance Summary	
Total Gross Power, MWe	**687**
CO_2 Capture/Removal Auxiliaries, kWe	0
CO_2 Compression, kWe	0
Balance of Plant, kWe	36,640
Total Auxiliaries, MWe	**37**
Net Power, MWe	**650**
HHV Net Plant Efficiency, %	38.6%
HHV Net Plant Heat Rate, kJ/kWh (Btu/kWh)	9,318 (8,832)
LHV Net Plant Efficiency, %	40.1%
LHV Net Plant Heat Rate, kJ/kWh (Btu/kWh)	8,987 (8,518)
HHV Boiler Efficiency, %	88.1%
LHV Boiler Efficiency, %	91.3%
Steam Turbine Cycle Efficiency, %	46.3%
Steam Turbine Heat Rate, kJ/kWh (Btu/kWh)	7,770 (7,365)
Condenser Duty, GJ/hr (MMBtu/hr)	2,789 (2,644)
AGR Cooling Duty, GJ/hr (MMBtu/hr)	– (–)
As-Received Coal Feed, kg/hr (lb/hr)	223,189 (492,047)
Limestone Sorbent Feed, kg/hr (lb/hr)	21,590 (47,598)
HHV Thermal Input, kWt	1,682,291
LHV Thermal Input, kWt	1,622,591
Raw Water Withdrawal, $(m^3/min)/MW_{net}$ (gpm/MW_{net})	0.038 (10.0)
Raw Water Consumption, $(m^3/min)/MW_{net}$ (gpm/MW_{net})	0.030 (7.9)
Excess Air, %	20.3%

Exhibit 4-20. Case B11A plant power summary

Power Summary	
Steam Turbine Power, MWe	687
Total Gross Power, MWe	**687**
Auxiliary Load Summary	
Activated Carbon Injection, kWe	30
Ash Handling, kWe	710
Baghouse, kWe	100
Circulating Water Pumps, kWe	5,690
CO_2 Capture/Removal Auxiliaries, kWe	0
CO_2 Compression, kWe	0
Coal Handling and Conveying, kWe	480
Condensate Pumps, kWe	720
Cooling Tower Fans, kWe	2,940
Dry Sorbent Injection, kWe	60
Flue Gas Desulfurizer, kWe	3,450
Forced Draft Fans, kWe	2,090
Ground Water Pumps, kWe	590
Induced Draft Fans, kWe	8,560
Miscellaneous Balance of Plant[A,B], kWe	2,250
Primary Air Fans, kWe	1,640
Pulverizers, kWe	3,350
SCR, kWe	40
Sorbent Handling & Reagent Preparation, kWe	1,040
Spray Dryer Evaporator, kWe	250
Steam Turbine Auxiliaries, kWe	500
Transformer Losses, kWe	2,150
Total Auxiliaries, MWe	**37**
Net Power, MWe	**650**

[A]Boiler feed pumps are turbine driven
[B]Includes plant control systems, lighting, HVAC, and miscellaneous low voltage loads

4.2.4.1 Environmental Performance

The environmental targets for emissions of Hg, NOx, SO_2, and PM were presented in Section 2.4. A summary of the plant air emissions for Case B11A is presented in Exhibit 4-21. SO_2 emissions are utilized as a surrogate for HCl emissions; therefore, HCl is not reported.

Exhibit 4-21. Case B11A air emissions

	kg/GJ (lb/MMBtu)	Tonne/year (ton/year)[A]	kg/MWh (lb/MWh)[B]
SO_2	0.035 (0.081)	1,564 (1,723)	0.306 (0.674)
NOx	0.036 (0.084)	1,623 (1,789)	0.318 (0.700)
Particulate	0.005 (0.011)	209 (230)	0.041 (0.090)
Hg	1.54E-7 (3.59E-7)	0.007 (0.008)	1.36E-6 (3.00E-6)
CO_2	87 (202)	3,922,513 (4,323,831)	767 (1,691)
CO_2[C]	-	-	811 (1,787)
	mg/Nm^3		
Particulate Concentration[D,E]	14.5		

[A]Calculations based on an 85 percent capacity factor
[B]Emissions based on gross power except where otherwise noted
[C]CO_2 emissions based on net power instead of gross power
[D]Concentration of particles in the flue gas after the baghouse
[E]Normal conditions given at 32°F and 14.696 psia

SO_2 emissions are controlled using a wet limestone forced oxidation scrubber that achieves a removal efficiency of 98 percent. The byproduct calcium sulfate is dewatered and stored on site. The wallboard grade material can potentially be marketed and sold, but since it is highly dependent on local market conditions, no byproduct credit was taken. The saturated flue gas exiting the scrubber is vented through the plant stack.

NOx boiler emissions are controlled to about 0.15 kg/GJ (0.35 lb/MMBtu) using LNBs and OFA. An SCR unit then further reduces the NOx concentration by 76.1 percent to 0.03 kg/GJ (0.08 lb/MMBtu).

Particulate emissions are controlled using a pulse jet fabric filter, which operates at an efficiency of 99.9 percent.

The total reduction in mercury emission via the combined control equipment (SCR, ACI, fabric filter, DSI, and wet FGD) is 96.9 percent.

CO_2 emissions represent the uncontrolled discharge from the process.

The carbon balance for the plant is shown in Exhibit 4-22. The carbon input to the plant consists of carbon in the coal, carbon in the air, PAC, and carbon in the limestone reagent used in the FGD absorber. Carbon in the air is not neglected here since the Aspen model accounts for air components throughout. Carbon leaves the plant mostly as CO_2 through the stack; however, the PAC is captured in the fabric filter, unburned carbon remains in the bottom ash, and some leaves as gypsum.

Exhibit 4-22. Case B11A carbon balance

Carbon In		Carbon Out	
	kg/hr (lb/hr)		kg/hr (lb/hr)
Coal	142,271 (313,654)	Stack Gas	143,771 (316,961)
Air (CO_2)	332 (731)	FGD Product	169 (372)
PAC	48 (106)	Baghouse	731 (1,611)
FGD Reagent	2,191 (4,830)	Bottom Ash	171 (376)
		CO_2 Product	0.0 (0.0)
		CO_2 Dryer Vent	0.0 (0.0)
		CO_2 Knockout	0.0 (0.0)
Total	**144,841 (319,320)**	**Total**	**144,841 (319,320)**

Exhibit 4-23 shows the sulfur balance for the plant. Sulfur input comes solely from the sulfur in the coal. Sulfur output includes the sulfur recovered from the FGD as gypsum, sulfur captured in the fabric filter via hydrated lime, and sulfur emitted in the stack gas.

Exhibit 4-23. Case B11A sulfur balance

Sulfur In		Sulfur Out	
	kg/hr (lb/hr)		kg/hr (lb/hr)
Coal	5,594 (12,333)	FGD Product	5,259 (11,595)
		Stack Gas	109 (241)
		Polishing Scrubber and Solvent Reclaiming	0.0 (0.0)
		Baghouse	225 (497)
Total	**5,594 (12,333)**	**Total**	**5,594 (12,333)**

Exhibit 4-24 shows the water balance for Case B11A.

Water demand represents the total amount of water required for a particular process. Some water is recovered within the process and is re-used as internal recycle. The difference between demand and recycle is raw water withdrawal. Raw water withdrawal is defined as the water removed from the ground or diverted from a POTW for use in the plant and was assumed to be provided 50 percent by a POTW and 50 percent from groundwater. Raw water withdrawal can be represented by the water metered from a raw water source and used in the plant processes for all purposes, such as FGD makeup, BFW makeup, and cooling tower makeup. The difference between water withdrawal and process water discharge is defined as water consumption and can be represented by the portion of the raw water withdrawn that is evaporated, transpired, incorporated into products or otherwise not returned to the water source from which it was withdrawn. Water consumption represents the net impact of the plant process on the water source balance.

Exhibit 4-24. Case B11A water balance

Water Use	Water Demand	Internal Recycle	Raw Water Withdrawal	Process Water Discharge	Raw Water Consumption
	m^3/min (gpm)	m^3/min (gpm)	m^3/min (gpm)	m^3/min (gpm)	m^3/min (gpm)
FGD Process Makeup	2.3 (612)	–	2.3 (612)	–	2.3 (612)
CO_2 Drying	–	–	–	–	–
CO_2 Capture Recovery	–	–	–	–	–
CO_2 Compression KO	–	–	–	–	–
Deaerator Vent	–	–	–	0.1 (17)	-0.1 (-17)
Condenser Makeup	**0.4 (100)**	**–**	**0.4 (100)**	**–**	**0.4 (100)**
BFW Makeup	0.4 (100)	–	0.4 (100)	–	0.4 (100)
Cooling Tower	**22 (5,856)**	**0.3 (83)**	**22 (5,773)**	**5.0 (1,317)**	**17 (4,456)**
BFW Blowdown	–	0.3 (83)	-0.3 (-83)	–	-0.3 (-83)
Total	**25 (6,568)**	**0.3 (83)**	**25 (6,485)**	**5.0 (1,334)**	**19 (5,151)**

4.2.4.2 Energy and Mass Balance Diagrams

An energy and mass balance diagram is shown for the Case B11A PC boiler, the FGD unit, and steam cycle in Exhibit 4-25 and Exhibit 4-26.

An overall plant energy balance is provided in tabular form in Exhibit 4-27. The power out is the steam turbine power prior to generator losses. The power at the generator terminals (shown in Exhibit 4-19) is calculated by multiplying the power out by a generator efficiency of 98.5 percent.

Exhibit 4-25. Case B11A energy and mass balance, SubC PC boiler without CO_2 capture

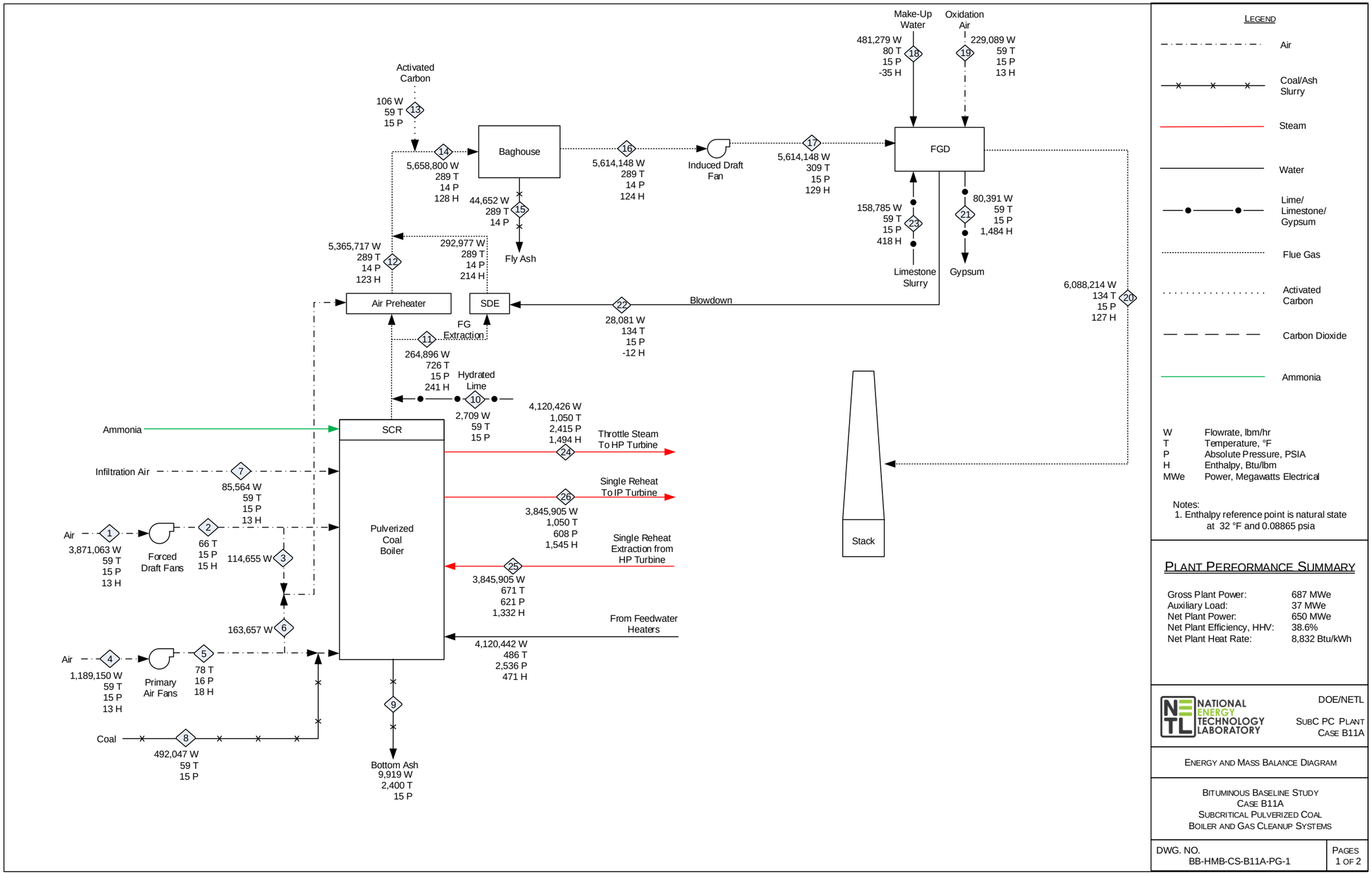

Exhibit 4-26. Case B11A energy and mass balance, SubC steam cycle

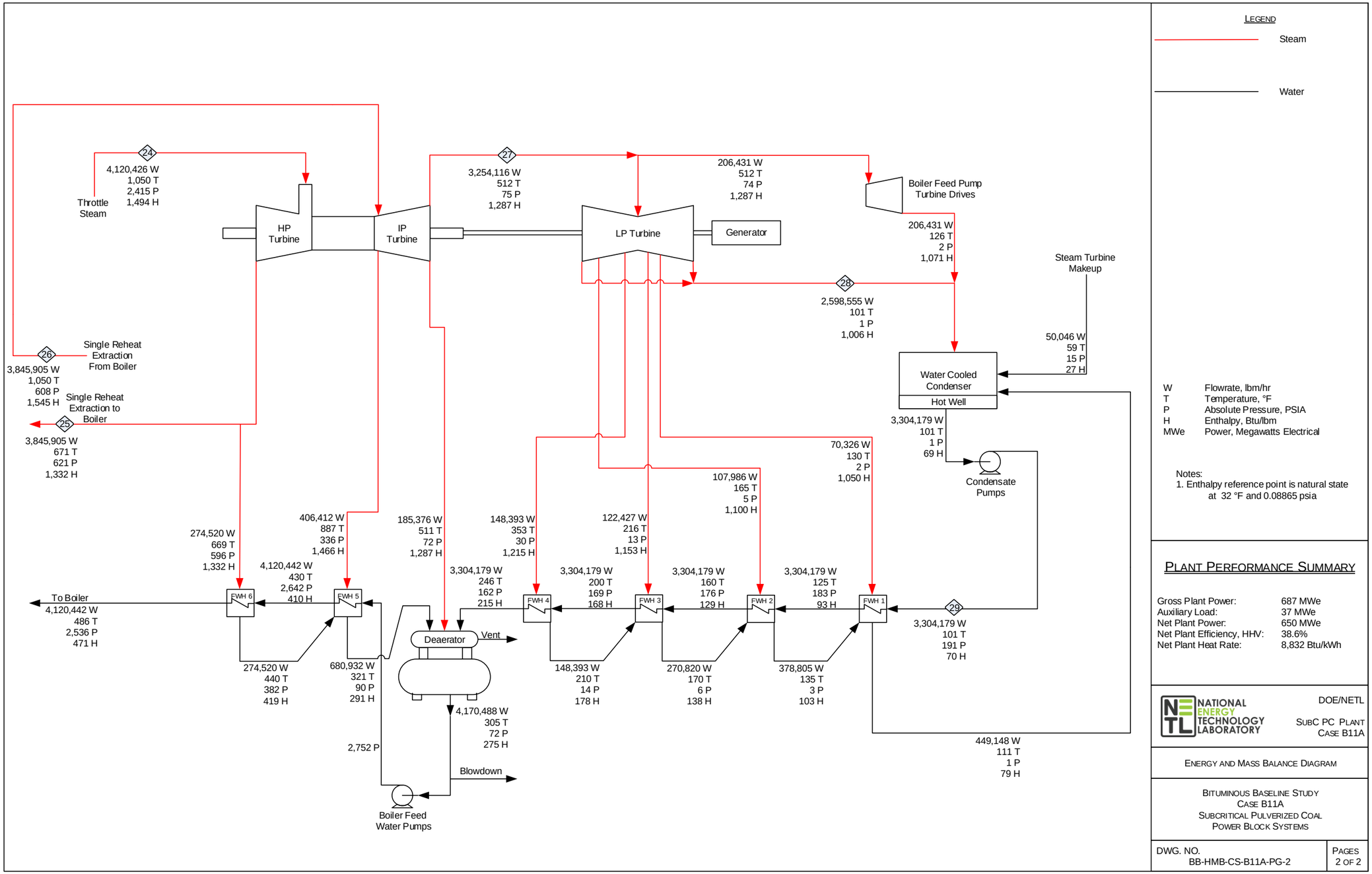

Exhibit 4-27. Case B11A overall energy balance (0°C [32°F] reference)

	HHV	Sensible + Latent	Power	Total
Heat In GJ/hr (MMBtu/hr)				
Coal	6,056 (5,740)	5.1 (4.8)	–	6,061 (5,745)
Air	–	71 (67)	–	71 (67)
Raw Water Makeup	–	92 (87)	–	92 (87)
Limestone	–	0.5 (0.4)	–	0.5 (0.4)
Auxiliary Power	–	–	132 (125)	132 (125)
TOTAL	**6,056 (5,740)**	**168 (160)**	**132 (125)**	**6,357 (6,025)**
Heat Out GJ/hr (MMBtu/hr)				
Bottom Ash	–	5.7 (5.4)	–	5.7 (5.4)
Fly Ash	–	2.1 (2.0)	–	2.1 (2.0)
Stack Gas	–	815 (772)	–	815 (772)
Sulfur	–	–	–	–
Gypsum	–	2.1 (2.0)	–	2.1 (2.0)
Motor Losses and Design Allowances	–	–	40 (38)	40 (38)
Cooling Tower Load[A]	–	2,895 (2,744)	–	2,895 (2,744)
CO_2 Product Stream	–	–	–	–
Blowdown Streams and Deaerator Vent	–	14 (14)	–	14 (14)
Ambient Losses[B]	–	140 (133)	–	140 (133)
Power	–	–	2,472 (2,343)	2,472 (2,343)
TOTAL	**0.0 (0.0)**	**3,874 (3,672)**	**2,512 (2,381)**	**6,386 (6,053)**
Unaccounted Energy[C]	–	–	–	*-30 (-28)*

[A]Includes condenser and miscellaneous cooling loads
[B]Ambient losses include all losses to the environment through radiation, convection, etc. Sources of these losses include the boiler, reheater, superheater, and transformers
[C]By difference

4.2.5 Case B11A – Major Equipment List

Major equipment items for the SubC PC plant with no CO_2 capture are shown in the following tables. The accounts used in the equipment list correspond to the account numbers used in the cost estimates in Section 4.2.6. In general, the design conditions include a 10 percent contingency for flows and heat duties and a 21 percent contingency for heads on pumps and fans.

Case B11A – Account 1: Coal and Sorbent Handling

Equipment No.	Description	Type	Design Condition	Operating Qty.	Spares
1	Bottom Trestle Dumper and Receiving Hoppers	N/A	180 tonne (200 ton)	2	0
2	Feeder	Belt	570 tonne/hr (630 tph)	2	0
3	Conveyor No. 1	Belt	1,130 tonne/hr (1,250 tph)	1	0
4	Transfer Tower No. 1	Enclosed	N/A	1	0
5	Conveyor No. 2	Belt	1,130 tonne/hr (1,250 tph)	1	0
6	As-Received Coal Sampling System	Two-stage	N/A	1	0
7	Stacker/Reclaimer	Traveling, linear	1,130 tonne/hr (1,250 tph)	1	0
8	Reclaim Hopper	N/A	50 tonne (50 ton)	2	1
9	Feeder	Vibratory	180 tonne/hr (200 tph)	2	1
10	Conveyor No. 3	Belt w/ tripper	370 tonne/hr (410 tph)	1	0
11	Crusher Tower	N/A	N/A	1	0
12	Coal Surge Bin w/ Vent Filter	Dual outlet	180 tonne (200 ton)	2	0
13	Crusher	Impactor reduction	8 cm x 0 - 3 cm x 0 (3 in x 0 - 1-1/4 in x 0)	2	0
14	As-Fired Coal Sampling System	Swing hammer	N/A	1	1
15	Conveyor No. 4	Belt w/tripper	370 tonne/hr (410 tph)	1	0
16	Transfer Tower No. 2	Enclosed	N/A	1	0
17	Conveyor No. 5	Belt w/ tripper	370 tonne/hr (410 tph)	1	0
18	Coal Silo w/ Vent Filter and Slide Gates	Field erected	820 tonne (900 ton)	3	0
19	Activated Carbon Storage Silo and Feeder System	Shop assembled	Silo - 9 tonne (10 ton) Feeder - 50 kg/hr (120 lb/hr)	1	0
20	Hydrated Lime Storage Silo and Feeder System	Shop assembled	Silo - 230 tonne (250 ton) Feeder - 1,350 kg/hr (2,980 lb/hr)	1	0
21	Limestone Truck Unloading Hopper	N/A	30 tonne (40 ton)	1	0
22	Limestone Feeder	Belt	91 tonne/hr (100 tph)	1	0
23	Limestone Conveyor No. 1	Belt	91 tonne/hr (100 tph)	1	0
24	Limestone Reclaim Hopper	N/A	18 tonne (20 ton)	1	0
25	Limestone Reclaim Feeder	Belt	72 tonne/hr (79 tph)	1	0
26	Limestone Conveyor No. 2	Belt	72 tonne/hr (79 tph)	1	0
27	Limestone Day Bin	w/ actuator	285 tonne (314 ton)	2	0

Case B11A – Account 2: Coal and Sorbent Preparation and Feed

Equipment No.	Description	Type	Design Condition	Operating Qty.	Spares
1	Coal Feeder	Gravimetric	41 tonne/hr (45 tph)	6	0
2	Coal Pulverizer	Ball type or equivalent	41 tonne/hr (45 tph)	6	0
3	Limestone Weigh Feeder	Gravimetric	24 tonne/hr (26 tph)	1	1
4	Limestone Ball Mill	Rotary	24 tonne/hr (26 tph)	1	1
5	Limestone Mill Slurry Tank with Agitator	N/A	90,800 liters (24,000 gal)	1	1
6	Limestone Mill Recycle Pumps	Horizontal centrifugal	1,510 lpm @ 10m H_2O (400 gpm @ 40 ft H_2O)	1	1
7	Hydroclone Classifier	4 active cyclones in a 5-cyclone bank	380 lpm (100 gpm) per cyclone	1	1
8	Distribution Box	2-way	N/A	1	1
9	Limestone Slurry Storage Tank with Agitator	Field erected	513,000 liters (136,000 gal)	1	1
10	Limestone Slurry Feed Pumps	Horizontal centrifugal	1,070 lpm @ 9m H_2O (280 gpm @ 30 ft H_2O)	1	1

Case B11A – Account 3: Feedwater and Miscellaneous Balance of Plant Systems

Equipment No.	Description	Type	Design Condition	Operating Qty.	Spares
1	Demineralized Water Storage Tank	Vertical, cylindrical, outdoor	1,500,000 liters (396,000 gal)	2	0
2	Condensate Pumps	Vertical canned	27,700 lpm @ 200 m H_2O (7,300 gpm @ 500 ft H_2O)	1	1
3	Deaerator and Storage Tank	Horizontal spray type	2,081,000 kg/hr (4,588,000 lb/hr), 5 min. tank	1	0
4	Boiler Feed Pump/Turbine	Barrel type, multi-stage, centrifugal	34,500 lpm @ 2,300 m H_2O (9,100 gpm @ 7,500 ft H_2O)	1	1
5	Startup Boiler Feed Pump, Electric Motor Driven	Barrel type, multi-stage, centrifugal	10,300 lpm @ 2,300 m H_2O (2,700 gpm @ 7,500 ft H_2O)	1	0
6	LP Feedwater Heater 1A/1B	Horizontal U-tube	820,000 kg/hr (1,820,000 lb/hr)	2	0
7	LP Feedwater Heater 2A/2B	Horizontal U-tube	820,000 kg/hr (1,820,000 lb/hr)	2	0
8	LP Feedwater Heater 3A/3B	Horizontal U-tube	820,000 kg/hr (1,820,000 lb/hr)	2	0
9	LP Feedwater Heater 4A/4B	Horizontal U-tube	820,000 kg/hr (1,820,000 lb/hr)	2	0
10	HP Feedwater Heater 6	Horizontal U-tube	2,060,000 kg/hr (4,530,000 lb/hr)	1	0
11	HP Feedwater Heater 7	Horizontal U-tube	2,060,000 kg/hr (4,530,000 lb/hr)	1	0
12	Auxiliary Boiler	Shop fabricated, water tube	20,000 kg/hr, 2.8 MPa, 343°C (40,000 lb/hr, 400 psig, 650°F)	1	0
13	Gas Pipeline	Underground, coated carbon steel, wrapped cathodic protection	N/A - For Start-up Only	1	0
14	Service Air Compressors	Flooded Screw	28 m3/min @ 0.7 MPa (1,000 scfm @ 100 psig)	2	1
15	Instrument Air Dryers	Duplex, regenerative	28 m3/min (1,000 scfm)	2	1
16	Closed Cycle Cooling Heat Exchangers	Shell and tube	53 GJ/hr (50 MMBtu/hr) each	2	0
17	Closed Cycle Cooling Water Pumps	Horizontal centrifugal	20,800 lpm @ 30 m H_2O (5,500 gpm @ 100 ft H_2O)	2	1
18	Engine-Driven Fire Pump	Vertical turbine, diesel engine	3,785 lpm @ 88 m H_2O (1,000 gpm @ 290 ft H_2O)	1	1
19	Fire Service Booster Pump	Two-stage horizontal centrifugal	2,650 lpm @ 64 m H_2O (700 gpm @ 210 ft H_2O)	1	1
20	Raw Water Pumps	Stainless steel, single suction	6,590 lpm @ 20 m H_2O (1,740 gpm @ 60 ft H_2O)	2	1
21	Ground Water Pumps	Stainless steel, single suction	2,630 lpm @ 270 m H_2O (700 gpm @ 880 ft H_2O)	5	1
22	Filtered Water Pumps	Stainless steel, single suction	1,190 lpm @ 50 m H_2O (310 gpm @ 160 ft H_2O)	2	1
23	Filtered Water Tank	Vertical, cylindrical	1,139,000 liter (301,000 gal)	1	0
24	Makeup Water Demineralizer	Multi-media filter, cartridge filter, RO membrane assembly, electrodeionization unit	760 lpm (200 gpm)	1	1

Equipment No.	Description	Type	Design Condition	Operating Qty.	Spares
25	Liquid Waste Treatment System	–	10 years, 24-hour storm	1	0
26	Process Water Treatment	Spray dryer evaporator	Flue Gas - 2,020 m^3/min (71,260 acfm) @ 385°C (726°F) & 0.1 MPa (15 psia) Blowdown - 120 lpm (30 gpm) @ 20,018 ppmw Cl^-	2	1

Case B11A – Account 4: Pulverized Coal Boiler and Accessories

Equipment No.	Description	Type	Design Condition	Operating Qty.	Spares
1	Boiler	SubC, drum wall-fired, low NOx burners, overfire air	2,060,000 kg/hr steam @ 16.5 MPa/566°C/566°C (4,530,000 lb/hr steam @ 2,400 psig/1,050°F/1,050°F)	1	0
2	Primary Air Fan	Centrifugal	297,000 kg/hr, 4,000 m^3/min @ 123 cm WG (654,000 lb/hr, 143,000 acfm @ 48 in. WG)	2	0
3	Forced Draft Fan	Centrifugal	966,000 kg/hr, 13,200 m^3/min @ 47 cm WG (2,129,000 lb/hr, 465,400 acfm @ 19 in. WG)	2	0
4	Induced Draft Fan	Centrifugal	1,401,000 kg/hr, 27,900 m^3/min @ 93 cm WG (3,088,000 lb/hr, 984,700 acfm @ 36 in. WG)	2	0
5	SCR Reactor Vessel	Space for spare layer	2,650,000 kg/hr (5,840,000 lb/hr)	2	0
6	SCR Catalyst	–	–	3	0
7	Dilution Air Blower	Centrifugal	100 m^3/min @ 108 cm WG (3,500 acfm @ 42 in. WG)	2	1
8	Ammonia Storage	Horizontal tank	109,000 liter (29,000 gal)	5	0
9	Ammonia Feed Pump	Centrifugal	21 lpm @ 90 m H_2O (5 gpm @ 300 ft H_2O)	2	1

Case B11A – Account 5: Flue Gas Cleanup

Equipment No.	Description	Type	Design Condition	Operating Qty.	Spares
1	Fabric Filter	Single stage, high-ratio with pulse-jet online cleaning system	1,401,000 kg/hr (3,088,000 lb/hr) 99.9% efficiency	2	0
2	Absorber Module	Counter-current open spray	47,000 m^3/min (1,673,000 acfm)	1	0
3	Recirculation Pumps	Horizontal centrifugal	165,000 lpm @ 65 m H_2O (44,000 gpm @ 210 ft H_2O)	5	1
4	Bleed Pumps	Horizontal centrifugal	4,560 lpm (1,200 gpm) at 20 wt% solids	2	1
5	Oxidation Air Blowers	Centrifugal	780 m^3/min @ 0.3 MPa (27,540 acfm @ 37 psia)	2	1
6	Agitators	Side entering	50 hp	5	1
7	Dewatering Cyclones	Radial assembly, 5 units each	1,140 lpm (300 gpm) per cyclone	2	0
8	Vacuum Filter Belt	Horizontal belt	36 tonne/hr (40 tph) of 50 wt% slurry	2	1

Equipment No.	Description	Type	Design Condition	Operating Qty.	Spares
9	Filtrate Water Return Pumps	Horizontal centrifugal	690 lpm @ 13 m H_2O (180 gpm @ 40 ft H_2O)	1	1
10	Filtrate Water Return Storage Tank	Vertical, lined	450,000 lpm (120,000 gal)	1	0
11	Process Makeup Water Pumps	Horizontal centrifugal	1,620 lpm @ 21 m H_2O (430 gpm @ 70 ft H_2O)	1	1
12	Activated Carbon Injectors	---	50 kg/hr (120 lb/hr)	1	0
13	Hydrated Lime Injectors	---	1,350 kg/hr (2,980 lb/hr)	1	0

Case B11A – Account 7: Ductwork and Stack

Equipment No.	Description	Type	Design Condition	Operating Qty.	Spares
1	Stack	Reinforced concrete with FRP liner	152 m (500 ft) high x 6.4 m (21 ft) diameter	1	0

Case B11A – Account 8: Steam Turbine and Accessories

Equipment No.	Description	Type	Design Condition	Operating Qty.	Spares
1	Steam Turbine	Commercially available advanced steam turbine	712 MW 16.5 MPa/566°C/566°C (2400 psig/ 1050°F/1050°F)	1	0
2	Steam Turbine Generator	Hydrogen cooled, static excitation	790 MVA @ 0.9 p.f., 24 kV, 60 Hz, 3-phase	1	0
3	Surface Condenser	Single pass, divided waterbox including vacuum pumps	1,530 GJ/hr (2,910 MMBtu/hr), Inlet water temperature 16°C (60°F), Water temperature rise 11°C (20°F)	1	0

Case B11A – Account 9: Cooling Water System

Equipment No.	Description	Type	Design Condition	Operating Qty.	Spares
1	Circulating Water Pumps	Vertical, wet pit	571,000 lpm @ 30 m (151,000 gpm @ 100 ft)	2	1
2	Cooling Tower	Evaporative, mechanical draft, multi-cell	11°C (51.5°F) wet bulb/ 16°C (60°F) CWT/ 27°C (80°F) HWT/ 3180 GJ/hr (3020 MMBtu/hr) heat duty	1	0

Case B11A – Account 10: Ash and Spent Sorbent Handling System

Equipment No.	Description	Type	Design Condition	Operating Qty.	Spares
1	Economizer Hopper (part of boiler scope of supply)	–	–	4	0
2	Bottom Ash Hopper (part of boiler scope of supply)	–	–	2	0
3	Clinker Grinder	–	4.9 tonne/hr (5.5 tph)	1	1
4	Pyrites Hopper (part of pulverizer scope of supply included with boiler)	–	–	6	0
5	Pyrites Transfer Tank	–	–	1	0
6	Pyrite Reject Water Pump	–	–	1	0
7	Pneumatic Transport Line	Fully-dry, isolatable	–	4	0
8	Bottom Ash Storage Silo	–	–	1	1

Equipment No.	Description	Type	Design Condition	Operating Qty.	Spares
9	Baghouse Hopper (part of baghouse scope of supply)	–	–	24	0
10	Air Heater Hopper (part of boiler scope of supply)	–	–	10	0
11	Air Blower	–	20 m^3/min @ 0.2 MPa (706 scfm @ 24 psi)	1	1
12	Fly Ash Silo	Reinforced concrete	1,310 tonne (1,450 ton)	2	0
13	Slide Gate Valves	–	–	2	0
14	Unloader	–	–	1	0
15	Telescoping Unloading Chute	–	120 tonne/hr (140 tph)	1	0

Case B11A – Account 11: Accessory Electric Plant

Equipment No.	Description	Type	Design Condition	Operating Qty.	Spares
1	STG Transformer	Oil-filled	24 kV/345 kV, 750 MVA, 3-ph, 60 Hz	1	0
2	High Voltage Transformer	Oil-filled	345 kV/13.8 kV, 0 MVA, 3-ph, 60 Hz	2	0
3	Medium Voltage Transformer	Oil-filled	24 kV/4.16 kV, 33 MVA, 3-ph, 60 Hz	1	1
4	Low Voltage Transformer	Dry ventilated	4.16 kV/480 V, 6 MVA, 3-ph, 60 Hz	1	1
5	STG Isolated Phase Bus Duct and Tap Bus	Aluminum, self-cooled	24 kV, 3-ph, 60 Hz	1	0
6	Medium Voltage Switchgear	Metal clad	4.16 kV, 3-ph, 60 Hz	1	1
7	Low Voltage Switchgear	Metal enclosed	480 V, 3-ph, 60 Hz	1	1
8	Emergency Diesel Generator	Sized for emergency shutdown	750 kW, 480 V, 3-ph, 60 Hz	1	0

Case B11A – Account 12: Instrumentation and Control

Equipment No.	Description	Type	Design Condition	Operating Qty.	Spares
1	DCS - Main Control	Monitor/keyboard; Operator printer (laser color); Engineering printer (laser B&W)	Operator stations/printers and engineering stations/printers	1	0
2	DCS - Processor	Microprocessor with redundant input/output	N/A	1	0
3	DCS - Data Highway	Fiber optic	Fully redundant, 25% spare	1	0

4.2.6 Case B11A – Cost Estimating

The cost estimating methodology was described previously in Section 2.7. Exhibit 4-28 shows a detailed breakdown of the capital costs; Exhibit 4-29 shows the owner's costs, along with the TOC, and TASC; Exhibit 4-30 shows the initial and annual O&M costs; and Exhibit 4-31 shows the LCOE breakdown.

The estimated TPC of the SubC PC boiler with no CO_2 capture is $2,011/kW. No process contingency is included in this case because all elements of the technology are commercially proven. The project contingency is 13.4 percent of the TPC. The LCOE is $63.9/MWh.

Exhibit 4-28. Case B11A total plant cost details

	Case:	B11A	– SubC PC w/o CO_2					Estimate Type:		Conceptual	
	Plant Size (MW, net):	650						Cost Base:		Dec 2018	
Item No.	Description	Equipment Cost	Material Cost	Labor		Bare Erected Cost	Eng'g CM H.O.& Fee	Contingencies		Total Plant Cost	
				Direct	Indirect			Process	Project	$/1,000	$/kW
1						Coal & Sorbent Handling					
1.1	Coal Receive & Unload	$1,037	$0	$467	$0	$1,504	$263	$0	$265	$2,032	$3
1.2	Coal Stackout & Reclaim	$3,404	$0	$761	$0	$4,165	$729	$0	$734	$5,628	$9
1.3	Coal Conveyors	$31,359	$0	$7,461	$0	$38,820	$6,793	$0	$6,842	$52,455	$81
1.4	Other Coal Handling	$4,361	$0	$916	$0	$5,277	$923	$0	$930	$7,130	$11
1.5	Sorbent Receive & Unload	$199	$0	$60	$0	$259	$45	$0	$46	$350	$1
1.6	Sorbent Stackout & Reclaim	$1,452	$0	$262	$0	$1,714	$300	$0	$302	$2,317	$4
1.7	Sorbent Conveyors	$2,200	$478	$532	$0	$3,210	$562	$0	$566	$4,337	$7
1.8	Other Sorbent Handling	$106	$25	$55	$0	$185	$32	$0	$33	$251	$0
1.9	Coal & Sorbent Handling Foundations	$0	$1,360	$1,793	$0	$3,152	$552	$0	$556	$4,260	$7
	Subtotal	**$44,117**	**$1,863**	**$12,306**	**$0**	**$58,286**	**$10,200**	**$0**	**$10,273**	**$78,759**	**$121**
2						Coal & Sorbent Preparation & Feed					
2.1	Coal Crushing & Drying	$2,210	$0	$425	$0	$2,635	$461	$0	$464	$3,560	$5
2.2	Prepared Coal Storage & Feed	$7,440	$0	$1,602	$0	$9,041	$1,582	$0	$1,594	$12,217	$19
2.5	Sorbent Preparation Equipment	$975	$42	$200	$0	$1,217	$213	$0	$215	$1,645	$3
2.6	Sorbent Storage & Feed	$1,635	$0	$616	$0	$2,251	$394	$0	$397	$3,042	$5
2.9	Coal & Sorbent Feed Foundation	$0	$648	$569	$0	$1,217	$213	$0	$215	$1,645	$3
	Subtotal	**$12,260**	**$690**	**$3,412**	**$0**	**$16,362**	**$2,863**	**$0**	**$2,884**	**$22,109**	**$34**
3						Feedwater & Miscellaneous BOP Systems					
3.1	Feedwater System	$3,335	$5,716	$2,858	$0	$11,909	$2,084	$0	$2,099	$16,092	$25
3.2	Water Makeup & Pretreating	$6,006	$601	$3,403	$0	$10,010	$1,752	$0	$2,352	$14,114	$22
3.3	Other Feedwater Subsystems	$2,455	$805	$765	$0	$4,025	$704	$0	$709	$5,439	$8
3.4	Service Water Systems	$1,871	$3,571	$11,563	$0	$17,005	$2,976	$0	$3,996	$23,977	$37
3.5	Other Boiler Plant Systems	$604	$220	$549	$0	$1,374	$240	$0	$242	$1,856	$3
3.6	Natural Gas Pipeline and Start-Up System	$3,117	$134	$101	$0	$3,351	$586	$0	$591	$4,529	$7
3.7	Waste Water Treatment Equipment	$8,532	$0	$5,229	$0	$13,761	$2,408	$0	$3,234	$19,403	$30
3.8	Spray Dryer Evaporator	$14,238	$0	$8,244	$0	$22,481	$3,934	$0	$5,283	$31,699	$49
3.9	Miscellaneous Plant Equipment	$190	$25	$97	$0	$312	$55	$0	$73	$440	$1
	Subtotal	**$40,347**	**$11,072**	**$32,809**	**$0**	**$84,228**	**$14,740**	**$0**	**$18,580**	**$117,548**	**$181**
4						Pulverized Coal Boiler & Accessories					
4.9	Pulverized Coal Boiler & Accessories	$187,262	$0	$122,292	$0	$309,554	$54,172	$0	$54,559	$418,285	$644
4.10	Selective Catalytic Reduction System	$24,213	$0	$15,813	$0	$40,026	$7,005	$0	$7,055	$54,085	$83
4.11	Boiler Balance of Plant	$1,343	$0	$877	$0	$2,220	$389	$0	$391	$3,000	$5
4.12	Primary Air System	$1,400	$0	$914	$0	$2,315	$405	$0	$408	$3,128	$5
4.13	Secondary Air System	$2,121	$0	$1,385	$0	$3,506	$614	$0	$618	$4,738	$7
4.14	Induced Draft Fans	$4,521	$0	$2,952	$0	$7,473	$1,308	$0	$1,317	$10,098	$16

Case:	B11A	– SubC PC w/o CO_2					Estimate Type:			Conceptual	
Plant Size (MW, net):	650						Cost Base:			Dec 2018	
Item No.	Description	Equipment Cost	Material Cost	Labor Direct	Labor Indirect	Bare Erected Cost	Eng'g CM H.O.& Fee	Contingencies Process	Contingencies Project	Total Plant Cost $/1,000	Total Plant Cost $/kW
4.15	Major Component Rigging	$77	$0	$50	$0	$127	$22	$0	$22	$171	$0
4.16	Boiler Foundations	$0	$347	$305	$0	$652	$114	$0	$115	$881	$1
	Subtotal	**$220,937**	**$347**	**$144,589**	**$0**	**$365,873**	**$64,028**	**$0**	**$64,485**	**$494,386**	**$761**
5						Flue Gas Cleanup					
5.2	WFGD Absorber Vessels & Accessories	$68,425	$0	$14,630	$0	$83,055	$14,535	$0	$14,638	$112,227	$173
5.3	Other FGD	$307	$0	$346	$0	$653	$114	$0	$115	$882	$1
5.6	Mercury Removal (Dry Sorbent Injection/Activated Carbon Injection)	$2,225	$489	$2,188	$0	$4,902	$858	$0	$864	$6,624	$10
5.9	Particulate Removal (Bag House & Accessories)	$1,296	$0	$817	$0	$2,112	$370	$0	$372	$2,854	$4
5.12	Gas Cleanup Foundations	$0	$168	$148	$0	$316	$55	$0	$56	$427	$1
5.13	Gypsum Dewatering System	$676	$0	$114	$0	$790	$138	$0	$139	$1,067	$2
	Subtotal	**$72,928**	**$658**	**$18,242**	**$0**	**$91,827**	**$16,070**	**$0**	**$16,185**	**$124,082**	**$191**
7						Ductwork & Stack					
7.3	Ductwork	$0	$704	$489	$0	$1,193	$209	$0	$210	$1,612	$2
7.4	Stack	$8,843	$0	$5,139	$0	$13,982	$2,447	$0	$2,464	$18,893	$29
7.5	Duct & Stack Foundations	$0	$207	$246	$0	$453	$79	$0	$107	$639	$1
	Subtotal	**$8,843**	**$911**	**$5,874**	**$0**	**$15,629**	**$2,735**	**$0**	**$2,781**	**$21,145**	**$33**
8						Steam Turbine & Accessories					
8.1	Steam Turbine Generator & Accessories	$59,973	$0	$6,742	$0	$66,716	$11,675	$0	$11,759	$90,150	$139
8.2	Steam Turbine Plant Auxiliaries	$1,363	$0	$2,899	$0	$4,262	$746	$0	$751	$5,759	$9
8.3	Condenser & Auxiliaries	$14,960	$0	$5,076	$0	$20,035	$3,506	$0	$3,531	$27,073	$42
8.4	Steam Piping	$31,991	$0	$12,965	$0	$44,956	$7,867	$0	$7,923	$60,746	$93
8.5	Turbine Generator Foundations	$0	$213	$351	$0	$564	$99	$0	$132	$795	$1
	Subtotal	**$108,287**	**$213**	**$28,033**	**$0**	**$136,532**	**$23,893**	**$0**	**$24,097**	**$184,522**	**$284**
9						Cooling Water System					
9.1	Cooling Towers	$13,639	$0	$4,218	$0	$17,856	$3,125	$0	$3,147	$24,128	$37
9.2	Circulating Water Pumps	$1,833	$0	$117	$0	$1,951	$341	$0	$344	$2,636	$4
9.3	Circulating Water System Auxiliaries	$11,992	$0	$1,587	$0	$13,579	$2,376	$0	$2,393	$18,349	$28
9.4	Circulating Water Piping	$0	$5,545	$5,022	$0	$10,567	$1,849	$0	$1,862	$14,279	$22
9.5	Make-up Water System	$1,050	$0	$1,350	$0	$2,400	$420	$0	$423	$3,243	$5
9.6	Component Cooling Water System	$864	$0	$663	$0	$1,527	$267	$0	$269	$2,064	$3
9.7	Circulating Water System Foundations	$0	$529	$879	$0	$1,408	$246	$0	$331	$1,986	$3
	Subtotal	**$29,378**	**$6,075**	**$13,836**	**$0**	**$49,289**	**$8,626**	**$0**	**$8,770**	**$66,684**	**$103**
10						Ash & Spent Sorbent Handling Systems					
10.6	Ash Storage Silos	$1,045	$0	$3,198	$0	$4,244	$743	$0	$748	$5,734	$9
10.7	Ash Transport & Feed Equipment	$3,556	$0	$3,525	$0	$7,082	$1,239	$0	$1,248	$9,569	$15
10.9	Ash/Spent Sorbent Foundation	$0	$728	$894	$0	$1,622	$284	$0	$381	$2,287	$4
	Subtotal	**$4,602**	**$728**	**$7,617**	**$0**	**$12,947**	**$2,266**	**$0**	**$2,377**	**$17,590**	**$27**

Case:	B11A	– SubC PC w/o CO_2					Estimate Type:			Conceptual	
Plant Size (MW, net):	650						Cost Base:			Dec 2018	
Item No.	Description	Equipment Cost	Material Cost	Labor Direct	Labor Indirect	Bare Erected Cost	Eng'g CM H.O.& Fee	Contingencies Process	Contingencies Project	Total Plant Cost $/1,000	Total Plant Cost $/kW
11						Accessory Electric Plant					
11.1	Generator Equipment	$2,503	$0	$1,888	$0	$4,391	$768	$0	$774	$5,934	$9
11.2	Station Service Equipment	$4,633	$0	$397	$0	$5,030	$880	$0	$887	$6,797	$10
11.3	Switchgear & Motor Control	$7,192	$0	$1,248	$0	$8,440	$1,477	$0	$1,488	$11,404	$18
11.4	Conduit & Cable Tray	$0	$935	$2,694	$0	$3,629	$635	$0	$640	$4,904	$8
11.5	Wire & Cable	$0	$2,476	$4,426	$0	$6,902	$1,208	$0	$1,216	$9,326	$14
11.6	Protective Equipment	$55	$0	$191	$0	$246	$43	$0	$43	$332	$1
11.7	Standby Equipment	$784	$0	$724	$0	$1,508	$264	$0	$266	$2,038	$3
11.8	Main Power Transformers	$6,471	$0	$132	$0	$6,604	$1,156	$0	$1,164	$8,923	$14
11.9	Electrical Foundations	$0	$206	$523	$0	$729	$128	$0	$171	$1,028	$2
	Subtotal	**$21,638**	**$3,617**	**$12,224**	**$0**	**$37,479**	**$6,559**	**$0**	**$6,648**	**$50,686**	**$78**
12						Instrumentation & Control					
12.1	Pulverized Coal Boiler Control Equipment	$694	$0	$124	$0	$817	$143	$0	$144	$1,105	$2
12.3	Steam Turbine Control Equipment	$621	$0	$70	$0	$691	$121	$0	$122	$933	$1
12.5	Signal Processing Equipment	$788	$0	$140	$0	$928	$162	$0	$164	$1,254	$2
12.6	Control Boards, Panels & Racks	$241	$0	$147	$0	$388	$68	$0	$68	$525	$1
12.7	Distributed Control System Equipment	$6,797	$0	$1,212	$0	$8,009	$1,402	$0	$1,412	$10,822	$17
12.8	Instrument Wiring & Tubing	$476	$381	$1,523	$0	$2,380	$416	$0	$419	$3,216	$5
12.9	Other Instrumentation & Controls Equipment	$585	$0	$1,355	$0	$1,940	$340	$0	$342	$2,621	$4
	Subtotal	**$10,201**	**$381**	**$4,571**	**$0**	**$15,153**	**$2,652**	**$0**	**$2,671**	**$20,475**	**$32**
13						Improvements to Site					
13.1	Site Preparation	$0	$414	$8,844	$0	$9,258	$1,620	$0	$2,176	$13,053	$20
13.2	Site Improvements	$0	$2,059	$2,720	$0	$4,780	$836	$0	$1,123	$6,740	$10
13.3	Site Facilities	$2,353	$0	$2,468	$0	$4,821	$844	$0	$1,133	$6,798	$10
	Subtotal	**$2,353**	**$2,473**	**$14,032**	**$0**	**$18,859**	**$3,300**	**$0**	**$4,432**	**$26,591**	**$41**
14						Buildings & Structures					
14.2	Boiler Building	$0	$11,587	$10,183	$0	$21,771	$3,810	$0	$3,837	$29,418	$45
14.3	Steam Turbine Building	$0	$16,106	$15,001	$0	$31,107	$5,444	$0	$5,483	$42,033	$65
14.4	Administration Building	$0	$1,046	$1,106	$0	$2,152	$377	$0	$379	$2,909	$4
14.5	Circulation Water Pumphouse	$0	$140	$111	$0	$251	$44	$0	$44	$339	$1
14.6	Water Treatment Buildings	$0	$389	$354	$0	$744	$130	$0	$131	$1,005	$2
14.7	Machine Shop	$0	$552	$371	$0	$922	$161	$0	$163	$1,246	$2
14.8	Warehouse	$0	$415	$415	$0	$831	$145	$0	$146	$1,123	$2
14.9	Other Buildings & Structures	$0	$290	$247	$0	$537	$94	$0	$95	$725	$1
14.10	Waste Treating Building & Structures	$0	$629	$1,909	$0	$2,539	$444	$0	$447	$3,430	$5
	Subtotal	**$0**	**$31,155**	**$29,698**	**$0**	**$60,853**	**$10,649**	**$0**	**$10,725**	**$82,228**	**$127**
	Total	**$575,891**	**$60,183**	**$327,243**	**$0**	**$963,317**	**$168,581**	**$0**	**$174,908**	**$1,306,806**	**$2,011**

Exhibit 4-29. Case B11A owner's costs

Description	$/1,000	$/kW
Pre-Production Costs		
6 Months All Labor	$9,064	$14
1 Month Maintenance Materials	$1,230	$2
1 Month Non-Fuel Consumables	$1,743	$3
1 Month Waste Disposal	$758	$1
25% of 1 Months Fuel Cost at 100% CF	$2,333	$4
2% of TPC	$26,136	$40
Total	**$41,263**	**$63**
Inventory Capital		
60-day supply of fuel and consumables at 100% CF	$21,609	$33
0.5% of TPC (spare parts)	$6,534	$10
Total	**$28,143**	**$43**
Other Costs		
Initial Cost for Catalyst and Chemicals	$2,131	$3
Land	$900	$1
Other Owner's Costs	$196,021	$302
Financing Costs	$35,284	$54
Total Overnight Costs (TOC)	**$1,610,548**	**$2,478**
TASC Multiplier (IOU, 35 year)	1.154	
Total As-Spent Cost (TASC)	**$1,859,235**	**$2,861**

Exhibit 4-30. Case B11A initial and annual operating and maintenance costs

Case:	B11A	– SubC PC w/o CO_2			Cost Base:	Dec 2018
Plant Size (MW, net):	650	Heat Rate-net (Btu/kWh):		8,832	Capacity Factor (%):	85
Operating & Maintenance Labor						
Operating Labor				**Operating Labor Requirements per Shift**		
Operating Labor Rate (base):		38.50	**$/hour**	Skilled Operator:		2.0
Operating Labor Burden:		30.00	**% of base**	Operator:		9.0
Labor O-H Charge Rate:		25.00	**% of labor**	Foreman:		1.0
				Lab Techs, etc.:		2.0
				Total:		**14.0**
Fixed Operating Costs						
					Annual Cost	
					($)	**($/kW-net)**
Annual Operating Labor:					$6,138,132	$9.444
Maintenance Labor:					$8,363,558	$12.868
Administrative & Support Labor:					$3,625,423	$5.578
Property Taxes and Insurance:					$26,136,119	$40.212
Total:					**$44,263,231**	**$68.101**
Variable Operating Costs						
					($)	**($/MWh-net)**
Maintenance Material:					$12,545,337	$2.59222
Consumables						
	Initial Fill	**Per Day**	**Per Unit**	**Initial Fill**		
Water (gal/1000):	0	4,669	$1.90	$0	$2,752,213	$0.56869
Makeup and Waste Water Treatment Chemicals (ton):	0	13.9	$550.00	$0	$2,373,237	$0.49038
Brominated Activated Carbon (ton):	0	1.27	$1,600.00	$0	$630,253	$0.13023
Enhanced Hydrated Lime (ton):	0	32.5	$240.00	$0	$2,420,414	$0.50013
Limestone (ton):	0	571	$22.00	$0	$3,898,528	$0.80555
Ammonia (19 wt%, ton):	0	54.8	$300.00	$0	$5,099,562	$1.05372
SCR Catalyst (ft^3):	14,204	13.0	$150.00	$2,130,615	$603,674	$0.12474
Subtotal:				**$2,130,615**	**$17,777,881**	**$3.67342**
Waste Disposal						
Fly Ash (ton)	0	536	$38.00	$0	$6,317,154	$1.30530
Bottom Ash (ton)	0	119	$38.00	$0	$1,403,273	$0.28996
SCR Catalyst (ft^3):	0	13.0	$2.50	$0	$10,061	$0.00208
Subtotal:				**$0**	**$7,730,488**	**$1.59734**
By-Products						
Gypsum (ton)	0	868	$0.00	$0	$0	$0.00000
Subtotal:				**$0**	**$0**	**$0.00000**
Variable Operating Costs Total:				**$2,130,615**	**$38,053,706**	**$7.86298**
Fuel Cost						
Illinois Number 6 (ton):	0	5,905	$51.96	$0	$95,181,380	$19.66719
Total:				**$0**	**$95,181,380**	**$19.66719**

Exhibit 4-31. Case B11A LCOE breakdown

Component	Value, $/MWh	Percentage
Capital	27.2	43%
Fixed	9.1	14%
Variable	7.9	12%
Fuel	19.7	31%
Total (Excluding T&S)	**63.9**	**N/A**
CO_2 T&S	0.0	0%
Total (Including T&S)	**63.9**	**N/A**

4.2.7 Case B11B –SubC PC Unit with CO_2 Capture

The plant configuration for Case B11B, SubC PC, is the same as Case B11A with the exception that the Cansolv system was used for the CDR facility. The nominal net output was maintained at 650 MW by increasing the boiler size and turbine/generator size to account for the greater auxiliary load imposed by the CDR facility and CO_2 compressors. Unlike the NGCC cases where gross output was fixed by the available size of the CTs, the PC cases utilize boilers and steam turbines that can be procured at nearly any desired output making it possible to maintain a constant net output.

The process description for Case B11B is essentially the same as Case B11A with one notable exception, the addition of CO_2 capture and compression. A BFD and stream tables for Case B11B are shown in Exhibit 4-32 and Exhibit 4-33, respectively. Since the CDR facility process description was provided in Section 4.1.8, it is not repeated here.

4.2.8 Case B11B – Performance Results

The Case B11B modeling assumptions were presented previously in Section 4.2.1.

The plant produces a net output of 650 MW at a net plant efficiency of 30.0 percent (HHV basis). Overall plant performance is summarized in Exhibit 4-34; Exhibit 4-35 provides a detailed breakdown of the auxiliary power requirements. The CDR facility, including CO_2 compression, accounts for over half of the auxiliary plant load. The CWS (CWPs and cooling tower fan) accounts for over 12 percent of the auxiliary load, largely due to the high cooling water demand of the CDR facility and CO_2 compressors.

Exhibit 4-32. Case B11B block flow diagram, SubC unit with CO_2 capture

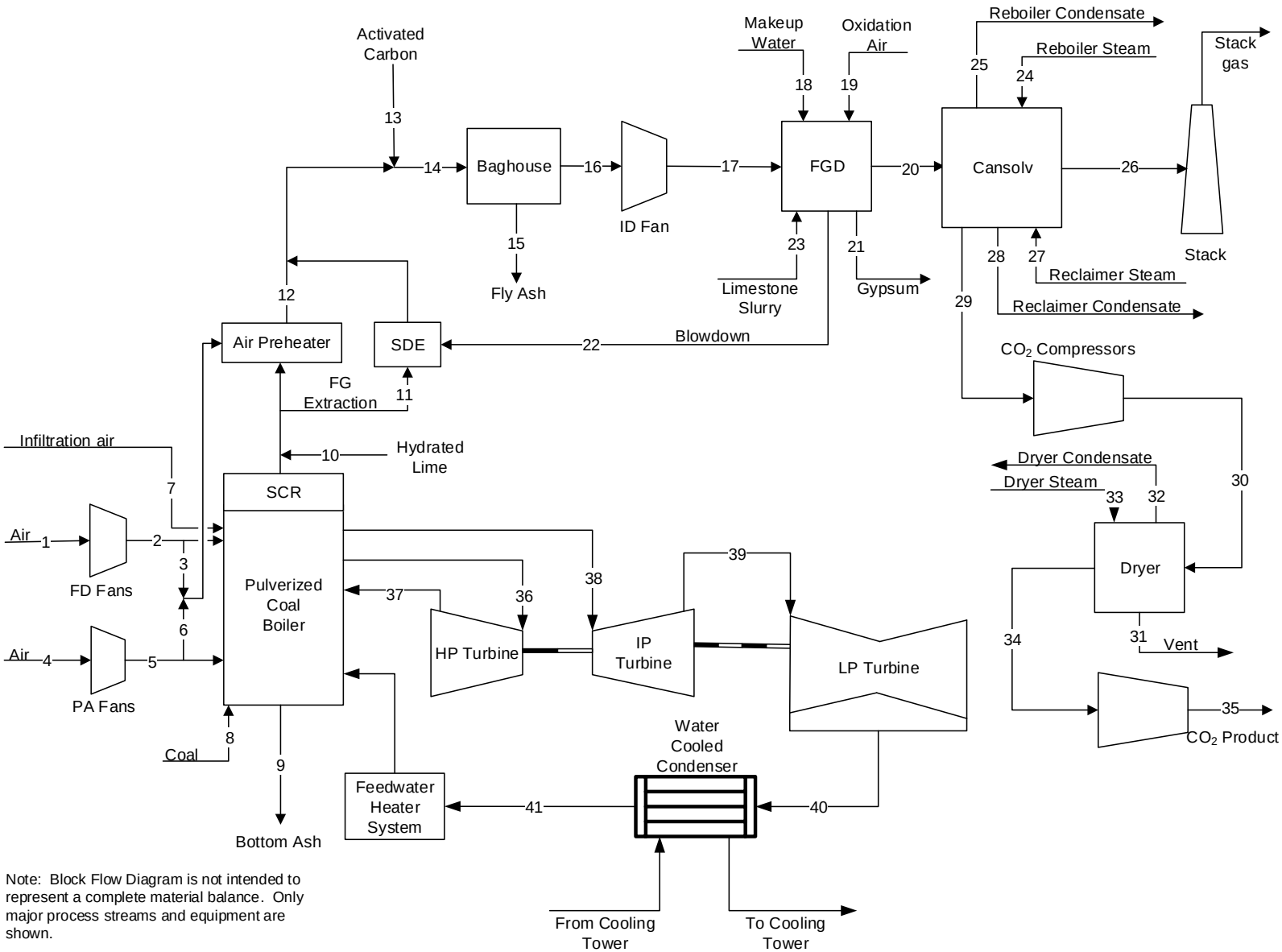

Note: Block Flow Diagram is not intended to represent a complete material balance. Only major process streams and equipment are shown.

Exhibit 4-33. Case B11B stream table, SubC unit with capture

	1	2	3	4	5	6	7	8	9	10	11	12	13	14	15
V-L Mole Fraction															
Ar	0.0092	0.0092	0.0092	0.0092	0.0092	0.0092	0.0092	0.0000	0.0000	0.0000	0.0087	0.0088	0.0000	0.0087	0.0000
CO_2	0.0003	0.0003	0.0003	0.0003	0.0003	0.0003	0.0003	0.0000	0.0000	0.0000	0.1457	0.1379	0.0000	0.1372	0.0000
H_2	0.0000	0.0000	0.0000	0.0000	0.0000	0.0000	0.0000	0.0000	0.0000	0.0000	0.0000	0.0000	0.0000	0.0000	0.0000
H_2O	0.0099	0.0099	0.0099	0.0099	0.0099	0.0099	0.0099	0.0000	0.0000	1.0000	0.0879	0.0837	0.0000	0.0911	0.0000
HCl	0.0000	0.0000	0.0000	0.0000	0.0000	0.0000	0.0000	0.0000	0.0000	0.0000	0.0001	0.0001	0.0000	0.0001	0.0000
N_2	0.7732	0.7732	0.7732	0.7732	0.7732	0.7732	0.7732	0.0000	0.0000	0.0000	0.7318	0.7340	0.0000	0.7281	0.0000
O_2	0.2074	0.2074	0.2074	0.2074	0.2074	0.2074	0.2074	0.0000	0.0000	0.0000	0.0237	0.0336	0.0000	0.0329	0.0000
SO_2	0.0000	0.0000	0.0000	0.0000	0.0000	0.0000	0.0000	0.0000	0.0000	0.0000	0.0021	0.0020	0.0000	0.0020	0.0000
SO_3	0.0000	0.0000	0.0000	0.0000	0.0000	0.0000	0.0000	0.0000	0.0000	0.0000	0.0000	0.0000	0.0000	0.0000	0.0000
NaCl	0.0000	0.0000	0.0000	0.0000	0.0000	0.0000	0.0000	0.0000	0.0000	0.0000	0.0000	0.0000	0.0000	0.0000	0.1142
$CaCl_2$	0.0000	0.0000	0.0000	0.0000	0.0000	0.0000	0.0000	0.0000	0.0000	0.0000	0.0000	0.0000	0.0000	0.0001	0.8858
Total	1.0000	1.0000	1.0000	1.0000	1.0000	1.0000	1.0000	0.0000	0.0000	1.0000	1.0000	1.0000	0.0000	1.0000	1.0000
V-L Flowrate (kg_{mol}/hr)	78,458	78,458	2,324	24,101	24,101	3,317	1,734	0	0	1	5,168	104,881	0	110,923	7
V-L Flowrate (kg/hr)	2,264,048	2,264,048	67,058	695,492	695,492	95,717	50,043	0	0	16	153,696	3,114,370	0	3,284,244	709
Solids Flowrate (kg/hr)	0	0	0	0	0	0	0	287,781	5,801	1,568	1,241	23,839	62	25,389	25,406
Temperature (°C)	15	19	19	15	25	25	15	15	1,316	15	385	143	15	143	143
Pressure (MPa, abs)	0.10	0.11	0.11	0.10	0.11	0.11	0.10	0.10	0.10	0.10	0.10	0.10	0.10	0.10	0.10
Steam Table Enthalpy (kJ/kg)[A]	30.23	34.36	34.36	30.23	40.78	40.78	30.23	---	---	---	---	---	---	---	---
AspenPlus Enthalpy (kJ/kg)[B]	-97.58	-93.45	-93.45	-97.58	-87.03	-87.03	-97.58	-2,119.02	-1,267.06	-13,402.95	-2,261.17	-2,394.16	-6.79	-2,452.91	-1,065.67
Density (kg/m³)	1.2	1.2	1.2	1.2	1.3	1.3	1.2	---	---	1,003.6	0.5	0.9	---	0.9	2,150.2
V-L Molecular Weight	28.857	28.857	28.857	28.857	28.857	28.857	28.857	---	---	18.015	29.742	29.694	---	29.608	104.986
V-L Flowrate (lb_{mol}/hr)	172,969	172,969	5,123	53,134	53,134	7,313	3,823	0	0	2	11,393	231,223	0	244,544	15
V-L Flowrate (lb/hr)	4,991,371	4,991,371	147,837	1,533,297	1,533,297	211,020	110,327	0	0	35	338,843	6,866,010	0	7,240,518	1,564
Solids Flowrate (lb/hr)	0	0	0	0	0	0	0	634,448	12,790	3,458	2,737	52,556	136	55,972	56,010
Temperature (°F)	59	66	66	59	78	78	59	59	2,400	59	726	289	59	289	289
Pressure (psia)	14.7	15.3	15.3	14.7	16.1	16.1	14.7	14.7	14.6	14.7	14.6	14.4	14.7	14.4	14.4
Steam Table Enthalpy (Btu/lb)[A]	13.0	14.8	14.8	13.0	17.5	17.5	13.0	---	---	---	---	---	---	---	---
AspenPlus Enthalpy (Btu/lb)[B]	-42.0	-40.2	-40.2	-42.0	-37.4	-37.4	-42.0	-911.0	544.7	-5,762.2	-972.1	-1,029.3	-2.9	-1,054.6	-458.2
Density (lb/ft³)	0.076	0.078	0.078	0.076	0.081	0.081	0.076	---	---	62.650	0.034	0.053	---	0.053	134.233

[A]Steam table reference conditions are 32.02°F & 0.089 psia

[B]Aspen thermodynamic reference state is the component's constituent elements in an ideal gas state at 25°C and 1 atm

Exhibit 4-33. Case B11B stream table, SubC unit with capture (continued)

	16	17	18	19	20	21	22	23	24	25	26	27	28	29	30
V-L Mole Fraction															
Ar	0.0087	0.0087	0.0000	0.0092	0.0081	0.0000	0.0000	0.0000	0.0000	0.0000	0.0106	0.0000	0.0000	0.0000	0.0000
CO_2	0.1372	0.1372	0.0000	0.0003	0.1246	0.0001	0.0000	0.0000	0.0000	0.0000	0.0163	0.0000	0.0000	0.9861	0.9977
H_2	0.0000	0.0000	0.0000	0.0000	0.0000	0.0000	0.0000	0.0000	0.0000	0.0000	0.0000	0.0000	0.0000	0.0000	0.0000
H_2O	0.0911	0.0911	0.9967	0.0099	0.1497	0.9998	0.9943	0.9999	1.0000	1.0000	0.0358	1.0000	1.0000	0.0139	0.0023
HCl	0.0001	0.0001	0.0000	0.0000	0.0000	0.0000	0.0000	0.0000	0.0000	0.0000	0.0000	0.0000	0.0000	0.0000	0.0000
N_2	0.7281	0.7281	0.0000	0.7732	0.6812	0.0000	0.0000	0.0000	0.0000	0.0000	0.8898	0.0000	0.0000	0.0000	0.0000
O_2	0.0329	0.0329	0.0000	0.2074	0.0364	0.0000	0.0000	0.0000	0.0000	0.0000	0.0475	0.0000	0.0000	0.0000	0.0000
SO_2	0.0020	0.0020	0.0000	0.0000	0.0000	0.0000	0.0000	0.0000	0.0000	0.0000	0.0000	0.0000	0.0000	0.0000	0.0000
SO_3	0.0000	0.0000	0.0000	0.0000	0.0000	0.0000	0.0000	0.0000	0.0000	0.0000	0.0000	0.0000	0.0000	0.0000	0.0000
NaCl	0.0000	0.0000	0.0005	0.0000	0.0000	0.0001	0.0009	0.0001	0.0000	0.0000	0.0000	0.0000	0.0000	0.0000	0.0000
$CaCl_2$	0.0000	0.0000	0.0028	0.0000	0.0000	0.0000	0.0048	0.0000	0.0000	0.0000	0.0000	0.0000	0.0000	0.0000	0.0000
Total	1.0000	1.0000	1.0000	1.0000	1.0000	1.0000	1.0000	1.0000	1.0000	1.0000	1.0000	1.0000	1.0000	1.0000	1.0000
V-L Flowrate (kg_{mol}/hr)	110,917	110,917	15,246	4,643	123,835	261	875	3,609	34,920	31,541	94,799	150	150	14,087	13,923
V-L Flowrate (kg/hr)	3,283,517	3,283,517	278,965	133,986	3,560,782	4,704	16,178	65,030	629,086	568,223	2,676,396	2,709	2,709	614,860	611,905
Solids Flowrate (kg/hr)	0	0	2,513	0	0	42,314	246	27,838	0	0	0	0	0	0	0
Temperature (°C)	143	154	27	15	57	15	57	15	266	100	30	355	214	30	29
Pressure (MPa, abs)	0.10	0.11	0.10	0.10	0.10	0.10	0.10	0.10	0.51	0.10	0.10	4.28	2.04	0.20	3.04
Steam Table Enthalpy (kJ/kg)[A]	287.72	299.40	---	30.23	294.95	---	---	---	2,994.07	417.50	88.41	3,098.44	913.81	37.71	-6.17
AspenPlus Enthalpy (kJ/kg)[B]	-2,463.94	-2,452.26	-15,763.50	-97.58	-2,930.88	-12,513.34	-15,496.70	-14,994.25	-12,986.23	-15,562.79	-528.00	-12,881.86	-15,066.49	-8,964.75	-8,975.08
Density (kg/m³)	0.8	0.9	1,002.5	1.2	1.1	881.2	979.6	1,003.7	2.1	958.7	1.1	16.0	848.5	3.5	63.6
V-L Molecular Weight	29.603	29.603	18.297	28.857	28.754	18.021	18.495	18.019	18.015	18.015	28.232	18.015	18.015	43.648	43.950
V-L Flowrate (lb_{mol}/hr)	244,529	244,529	33,612	10,236	273,010	575	1,928	7,957	76,985	69,536	208,995	331	331	31,056	30,695
V-L Flowrate (lb/hr)	7,238,916	7,238,916	615,012	295,388	7,850,180	10,371	35,665	143,366	1,386,898	1,252,718	5,900,443	5,971	5,971	1,355,533	1,349,019
Solids Flowrate (lb/hr)	0	0	5,540	0	0	93,286	543	61,373	0	0	0	0	0	0	0
Temperature (°F)	289	309	80	59	134	59	134	59	512	211	87	671	416	86	85
Pressure (psia)	14.2	15.3	14.7	14.7	14.8	14.7	14.7	14.7	73.5	14.5	14.8	620.5	296.6	28.9	441.1
Steam Table Enthalpy (Btu/lb)[A]	123.7	128.7	---	13.0	126.8	---	---	---	1,287.2	179.5	38.0	1,332.1	392.9	16.2	-2.7
AspenPlus Enthalpy (Btu/lb)[B]	-1,059.3	-1,054.3	-6,777.1	-42.0	-1,260.1	-5,379.8	-6,662.4	-6,446.4	-5,583.1	-6,690.8	-227.0	-5,538.2	-6,477.4	-3,854.2	-3,858.6
Density (lb/ft³)	0.052	0.055	62.582	0.076	0.067	55.008	61.155	62.658	0.129	59.847	0.071	1.000	52.968	0.218	3.973

[A]Steam table reference conditions are 32.02°F & 0.089 psia

[B]Aspen thermodynamic reference state is the component's constituent elements in an ideal gas state at 25°C and 1 atm

Exhibit 4-33. Case B11B stream table, SubC unit with capture (continued)

	31	32	33	34	35	36	37	38	39	40	41
V-L Mole Fraction											
Ar	0.0000	0.0000	0.0000	0.0000	0.0000	0.0000	0.0000	0.0000	0.0000	0.0000	0.0000
CO_2	0.0500	0.0000	0.0000	0.9995	0.9995	0.0000	0.0000	0.0000	0.0000	0.0000	0.0000
H_2	0.0000	0.0000	0.0000	0.0000	0.0000	0.0000	0.0000	0.0000	0.0000	0.0000	0.0000
H_2O	0.9500	1.0000	1.0000	0.0005	0.0005	1.0000	1.0000	1.0000	1.0000	1.0000	1.0000
HCl	0.0000	0.0000	0.0000	0.0000	0.0000	0.0000	0.0000	0.0000	0.0000	0.0000	0.0000
N_2	0.0000	0.0000	0.0000	0.0000	0.0000	0.0000	0.0000	0.0000	0.0000	0.0000	0.0000
O_2	0.0000	0.0000	0.0000	0.0000	0.0000	0.0000	0.0000	0.0000	0.0000	0.0000	0.0000
SO_2	0.0000	0.0000	0.0000	0.0000	0.0000	0.0000	0.0000	0.0000	0.0000	0.0000	0.0000
SO_3	0.0000	0.0000	0.0000	0.0000	0.0000	0.0000	0.0000	0.0000	0.0000	0.0000	0.0000
NaCl	0.0000	0.0000	0.0000	0.0000	0.0000	0.0000	0.0000	0.0000	0.0000	0.0000	0.0000
$CaCl_2$	0.0000	0.0000	0.0000	0.0000	0.0000	0.0000	0.0000	0.0000	0.0000	0.0000	0.0000
Total	1.0000	1.0000	1.0000	1.0000	1.0000	1.0000	1.0000	1.0000	1.0000	1.0000	1.0000
V-L Flowrate (kg_{mol}/hr)	27	18	18	13,896	13,896	133,796	124,731	124,731	104,498	52,759	74,582
V-L Flowrate (kg/hr)	512	322	322	611,392	611,392	2,410,368	2,247,071	2,247,071	1,882,561	950,465	1,343,621
Solids Flowrate (kg/hr)	0	0	0	0	0	0	0	0	0	0	0
Temperature (°C)	29	203	476	29	30	566	355	566	267	38	39
Pressure (MPa, abs)	3.04	1.64	2.42	2.90	15.27	16.65	4.28	4.19	0.52	0.01	1.32
Steam Table Enthalpy (kJ/kg)[A]	137.79	863.65	3,408.95	-6.32	-231.09	3,473.89	3,098.44	3,593.58	2,994.07	2,340.01	162.43
AspenPlus Enthalpy (kJ/kg)[B]	-15,225.37	-15,116.65	-12,571.34	-8,969.87	-9,194.65	-12,506.41	-12,881.86	-12,386.71	-12,986.23	-13,640.29	-15,817.87
Density (kg/m^3)	375.2	861.8	7.1	60.1	630.1	47.7	16.0	11.1	2.1	0.1	993.3
V-L Molecular Weight	19.315	18.015	18.015	43.997	43.997	18.015	18.015	18.015	18.015	18.015	18.015
V-L Flowrate (lb_{mol}/hr)	58	39	39	30,636	30,636	294,969	274,986	274,986	230,379	116,313	164,426
V-L Flowrate (lb/hr)	1,129	709	709	1,347,889	1,347,889	5,313,951	4,953,943	4,953,943	4,150,336	2,095,417	2,962,178
Solids Flowrate (lb/hr)	0	0	0	0	0	0	0	0	0	0	0
Temperature (°F)	85	397	888	85	86	1,050	671	1,050	512	101	101
Pressure (psia)	441.1	237.4	350.5	421.1	2,214.7	2,414.7	620.5	608.1	75.0	1.0	190.7
Steam Table Enthalpy (Btu/lb)[A]	59.2	371.3	1,465.6	-2.7	-99.4	1,493.5	1,332.1	1,545.0	1,287.2	1,006.0	69.8
AspenPlus Enthalpy (Btu/lb)[B]	-6,545.7	-6,499.0	-5,404.7	-3,856.4	-3,953.0	-5,376.8	-5,538.2	-5,325.3	-5,583.1	-5,864.3	-6,800.5
Density (lb/ft^3)	23.421	53.801	0.446	3.755	39.338	2.975	1.000	0.692	0.132	0.003	62.010

[A]Steam table reference conditions are 32.02°F & 0.089 psia

[B]Aspen thermodynamic reference state is the component's constituent elements in an ideal gas state at 25°C and 1 atm

Exhibit 4-34. Case B11B plant performance summary

Performance Summary	
Total Gross Power, MWe	**776**
CO_2 Capture/Removal Auxiliaries, kWe	28,700
CO_2 Compression, kWe	46,670
Balance of Plant, kWe	50,760
Total Auxiliaries, MWe	**126**
Net Power, MWe	**650**
HHV Net Plant Efficiency, %	30.0%
HHV Net Plant Heat Rate, kJ/kWh (Btu/kWh)	12,020 (11,393)
LHV Net Plant Efficiency, %	31.1%
LHV Net Plant Heat Rate, kJ/kWh (Btu/kWh)	11,593 (10,988)
HHV Boiler Efficiency, %	88.1%
LHV Boiler Efficiency, %	91.3%
Steam Turbine Cycle Efficiency, %	55.2%
Steam Turbine Heat Rate, kJ/kWh (Btu/kWh)	6,526 (6,186)
Condenser Duty, GJ/hr (MMBtu/hr)	2,347 (2,225)
AGR Cooling Duty, GJ/hr (MMBtu/hr)	2,465 (2,337)
As-Received Coal Feed, kg/hr (lb/hr)	287,781 (634,448)
Limestone Sorbent Feed, kg/hr (lb/hr)	27,838 (61,373)
HHV Thermal Input, kWt	2,169,156
LHV Thermal Input, kWt	2,092,178
Raw Water Withdrawal, $(m^3/min)/MW_{net}$ (gpm/MW_{net})	0.062 (16.4)
Raw Water Consumption, $(m^3/min)/MW_{net}$ (gpm/MW_{net})	0.044 (11.6)
Excess Air, %	20.3%

Exhibit 4-35. Case B11B plant power summary

Power Summary	
Steam Turbine Power, MWe	776
Total Gross Power, MWe	**776**
Auxiliary Load Summary	
Activated Carbon Injection, kWe	40
Ash Handling, kWe	920
Baghouse, kWe	120
Circulating Water Pumps, kWe	10,310
CO_2 Capture/Removal Auxiliaries, kWe	28,700
CO_2 Compression, kWe	46,670
Coal Handling and Conveying, kWe	540
Condensate Pumps, kWe	730
Cooling Tower Fans, kWe	5,340
Dry Sorbent Injection, kWe	80
Flue Gas Desulfurizer, kWe	4,450
Forced Draft Fans, kWe	2,700
Ground Water Pumps, kWe	960
Induced Draft Fans, kWe	10,980
Miscellaneous Balance of Plant[A,B], kWe	2,250
Primary Air Fans, kWe	2,110
Pulverizers, kWe	4,310
SCR, kWe	50
Sorbent Handling & Reagent Preparation, kWe	1,340
Spray Dryer Evaporator, kWe	320
Steam Turbine Auxiliaries, kWe	500
Transformer Losses, kWe	2,710
Total Auxiliaries, MWe	**126**
Net Power, MWe	**650**

[A]Boiler feed pumps are turbine driven
[B]Includes plant control systems, lighting, HVAC, and miscellaneous low voltage loads

4.2.8.1 Environmental Performance

The environmental targets for emissions of Hg, NOx, SO_2, and PM were presented in Section 2.4. A summary of the plant air emissions for Case B11B is presented in Exhibit 4-36. SO_2 emissions are utilized as a surrogate for HCl emissions; therefore, HCl is not reported.

Exhibit 4-36. Case B11B air emissions

	kg/GJ (lb/MMBtu)	Tonne/year (ton/year)[A]	kg/MWh (lb/MWh)[B]
SO_2	0.000 (0.000)	0 (0)	0.000 (0.000)
NOx	0.032 (0.073)	1,834 (2,022)	0.318 (0.700)
Particulate	0.004 (0.009)	236 (260)	0.041 (0.090)
Hg	1.35E-7 (3.14E-7)	0.008 (0.009)	1.36E-6 (3.00E-6)
CO_2	9 (20)	505,771 (557,517)	88 (193)
CO_2[C]	-	-	105 (231)
	mg/Nm^3		
Particulate Concentration[D,E]	12.7		

[A]Calculations based on an 85 percent capacity factor
[B]Emissions based on gross power except where otherwise noted
[C]CO_2 emissions based on net power instead of gross power
[D]Concentration of particles in the flue gas after the baghouse
[E]Normal conditions given at 32°F and 14.696 psia

SO_2 emissions are controlled using a wet limestone forced oxidation scrubber that achieves a removal efficiency of 98 percent. The byproduct calcium sulfate is dewatered and stored on site. The wallboard grade material can potentially be marketed and sold, but since it is highly dependent on local market conditions, no byproduct credit was taken. The SO_2 emissions are further reduced to 2 ppmv using a NaOH based polishing scrubber in the CDR facility. The remaining low concentration of SO_2 is essentially completely removed in the CDR absorber vessel resulting in very low SO_2 emissions (reported as zero here).

NOx boiler emissions are controlled to about 0.15 kg/GJ (0.35 lb/MMBtu) using LNBs and OFA. An SCR unit then further reduces the NOx concentration by 79.0 percent to 0.03 kg/GJ (0.07 lb/MMBtu).

Particulate emissions are controlled using a pulse jet fabric filter, which operates at an efficiency of 99.9 percent.

The total reduction in mercury emission via the combined control equipment (SCR, ACI, fabric filter, DSI, and wet FGD) is 97.2 percent.

Ninety percent of the CO_2 in the flue gas is removed in CDR facility.

The carbon balance for the plant is shown in Exhibit 4-37. The carbon input to the plant consists of carbon in the coal, carbon in the air, PAC, and carbon in the limestone reagent used in the FGD absorber. Carbon leaves the plant mostly as CO_2 product from the CO_2 compression train; however, some CO_2 exits through the stack, the PAC is captured in the fabric filter, unburned carbon remains in the bottom ash, and some leaves as gypsum. The carbon capture efficiency is defined as one minus the amount of carbon in the stack gas relative to the total carbon in, represented by the following fraction:

$$\frac{Carbon\ in\ Stack}{(Total\ Carbon\ In)} = \left(1 - \left(\frac{40{,}869}{411{,}733}\right) *\right) 100 = 90.0\%$$

Exhibit 4-37. Case B11B carbon balance

Carbon In		Carbon Out	
	kg/hr (lb/hr)		kg/hr (lb/hr)
Coal	183,445 (404,427)	Stack Gas	18,538 (40,869)
Air (CO_2)	428 (942)	FGD Product	218 (480)
PAC	62 (136)	Baghouse	942 (2,078)
FGD Reagent	2,825 (6,227)	Bottom Ash	220 (485)
		CO_2 Product	166,825 (367,786)
		CO_2 Dryer Vent	16 (35)
		CO_2 Knockout	0.4 (0.8)
Total	**186,759 (411,733)**	**Total**	**186,759 (411,733)**

Exhibit 4-38 shows the sulfur balance for the plant. Sulfur input comes solely from the sulfur in the coal. Sulfur output includes the sulfur recovered from the FGD as gypsum, sulfur removed in the polishing scrubber, and sulfur removed in the baghouse.

Exhibit 4-38. Case B11B sulfur balance

Sulfur In		Sulfur Out	
	kg/hr (lb/hr)		kg/hr (lb/hr)
Coal	7,213 (15,902)	FGD Product	6,782 (14,951)
		Stack Gas	0.0 (0.0)
		Polishing Scrubber and Solvent Reclaiming	141 (311)
		Baghouse	291 (640)
Total	**7,213 (15,902)**	**Total**	**7,213 (15,902)**

Exhibit 4-39 shows the overall water balance for the plant. The exhibit is presented in an identical manner as was for Case B11A. The only notable difference is the FGD makeup water source. In CO_2 capture cases, a significant amount of water is recovered from the initial CDR facility cooling step. This water would otherwise be discharged; however, it is suitable to be used as FGD makeup. The balance of the water from the CDR facility is sent to discharge.

Exhibit 4-39. Case B11B water balance

Water Use	Water Demand	Internal Recycle	Raw Water Withdrawal	Process Water Discharge	Raw Water Consumption
	m^3/min (gpm)	m^3/min (gpm)	m^3/min (gpm)	m^3/min (gpm)	m^3/min (gpm)
FGD Process Makeup	3.0 (789)	3.0 (789)	–	–	–
CO_2 Drying	–	–	–	0.0 (2.3)	0.0 (-2.3)
CO_2 Capture Recovery	–	–	–	2.5 (667)	-2.5 (-667)
CO_2 Compression KO	–	–	–	0.0 (13)	0.0 (-13)
Deaerator Vent	–	–	–	0.1 (22)	-0.1 (-22)
Condenser Makeup	**0.5 (129)**	**–**	**0.5 (129)**	**–**	**0.5 (129)**
BFW Makeup	0.5 (129)	–	0.5 (129)	–	0.5 (129)
Cooling Tower	**40 (10,613)**	**0.4 (108)**	**40 (10,505)**	**9.0 (2,387)**	**31 (8,118)**
BFW Blowdown	–	0.4 (108)	-0.4 (-108)	–	-0.4 (-108)
Total	**44 (11,530)**	**3.4 (896)**	**40 (10,634)**	**12 (3,090)**	**29 (7,544)**

4.2.8.2 Energy and Mass Balance Diagrams

An energy and mass balance diagram is shown for the Case B11B PC boiler, the FGD unit, CDR system and steam cycle in Exhibit 4-40 and Exhibit 4-41. An overall plant energy balance is provided in tabular form in Exhibit 4-42.

The power out is the steam turbine power prior to generator losses. The power at the generator terminals (shown in Exhibit 4-34) is calculated by multiplying the power out by a generator efficiency of 98.5 percent. The cooling tower load includes the condenser, capture process heat rejected to cooling water, the CO_2 compressor intercooler load, and other miscellaneous cooling loads.

Exhibit 4-40. Case B11B energy and mass balance, SubC PC boiler with CO_2 capture

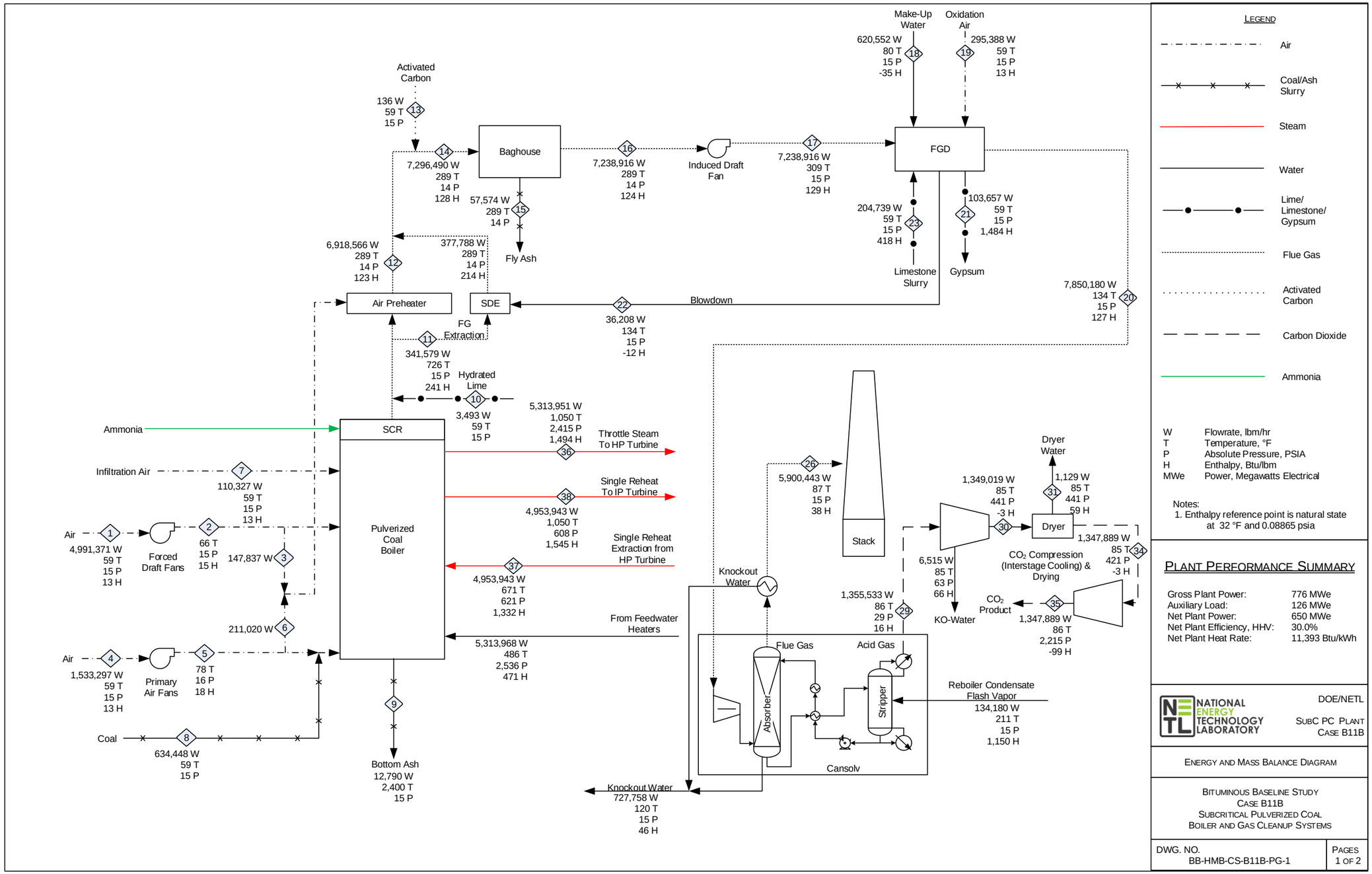

Exhibit 4-41. Case B11B energy and mass balance, SubC steam cycle

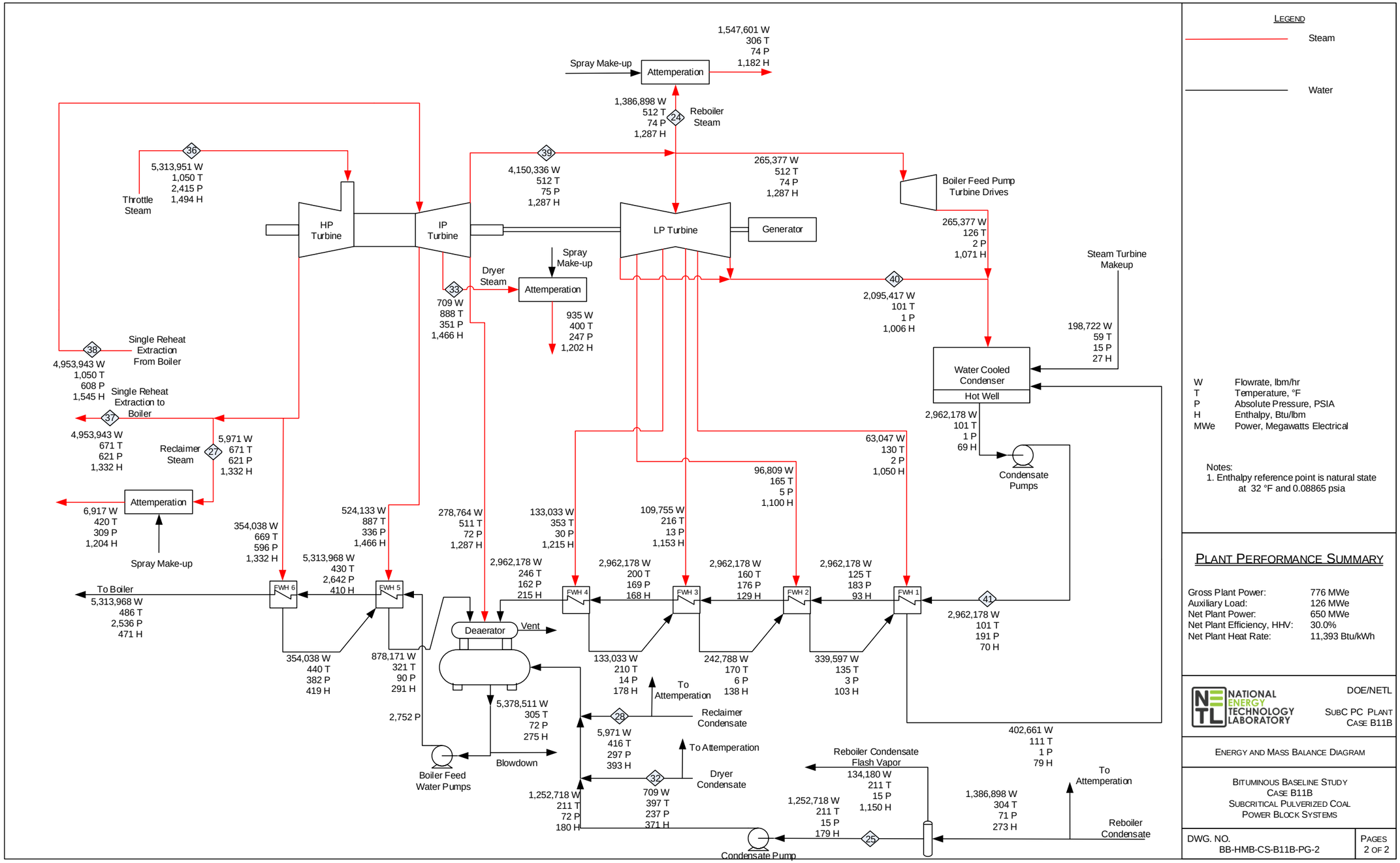

Exhibit 4-42. Case B11B overall energy balance (0°C [32°F] reference)

	HHV	Sensible + Latent	Power	Total
Heat In GJ/hr (MMBtu/hr)				
Coal	7,809 (7,401)	6.5 (6.2)	–	7,815 (7,408)
Air	–	91 (86)	–	91 (86)
Raw Water Makeup	–	151 (143)	–	151 (143)
Limestone	–	0.6 (0.6)	–	0.6 (0.6)
Auxiliary Power	–	–	454 (430)	454 (430)
TOTAL	**7,809 (7,401)**	**249 (236)**	**454 (430)**	**8,512 (8,068)**
Heat Out GJ/hr (MMBtu/hr)				
Bottom Ash	–	7.4 (7.0)	–	7.4 (7.0)
Fly Ash	–	2.7 (2.5)	–	2.7 (2.5)
Stack Gas	–	237 (224)	–	237 (224)
Sulfur	2.6 (2.5)	0.0 (0.0)	–	2.6 (2.5)
Gypsum	–	2.7 (2.6)	–	2.7 (2.6)
Motor Losses and Design Allowances	–	–	51 (48)	51 (48)
Cooling Tower Load[A]	–	5,246 (4,972)	–	5,246 (4,972)
CO_2 Product Stream	–	-141 (-134)	–	-141 (-134)
Blowdown Streams and Deaerator Vent	–	19 (18)	–	19 (18)
Ambient Losses[B]	–	183 (174)	–	183 (174)
Power	–	–	2,793 (2,647)	2,793 (2,647)
TOTAL	**2.6 (2.5)**	**5,556 (5,266)**	**2,844 (2,695)**	**8,402 (7,964)**
Unaccounted Energy[C]	–	–	–	*110 (104)*

[A]Includes condenser, AGR, and miscellaneous cooling loads
[B]Ambient losses include all losses to the environment through radiation, convection, etc. Sources of these losses include the boiler, reheater, superheater, and transformers
[C]By difference

4.2.9 Case B11B – Major Equipment List

Major equipment items for the SubC PC plant with CO_2 capture are shown in the following tables. The accounts used in the equipment list correspond to the account numbers used in the cost estimates in Section 4.2.10. In general, the design conditions include a 10 percent contingency for flows and heat duties and a 21 percent contingency for heads on pumps and fans.

Case B11B – Account 1: Coal and Sorbent Handling

Equipment No.	Description	Type	Design Condition	Operating Qty.	Spares
1	Bottom Trestle Dumper and Receiving Hoppers	N/A	180 tonne (200 ton)	2	0
2	Feeder	Belt	570 tonne/hr (630 tph)	2	0
3	Conveyor No. 1	Belt	1,130 tonne/hr (1,250 tph)	1	0
4	Transfer Tower No. 1	Enclosed	N/A	1	0
5	Conveyor No. 2	Belt	1,130 tonne/hr (1,250 tph)	1	0
6	As-Received Coal Sampling System	Two-stage	N/A	1	0
7	Stacker/Reclaimer	Traveling, linear	1,130 tonne/hr (1,250 tph)	1	0
8	Reclaim Hopper	N/A	60 tonne (70 ton)	2	1
9	Feeder	Vibratory	240 tonne/hr (260 tph)	2	1
10	Conveyor No. 3	Belt w/ tripper	470 tonne/hr (520 tph)	1	0
11	Crusher Tower	N/A	N/A	1	0
12	Coal Surge Bin w/ Vent Filter	Dual outlet	240 tonne (260 ton)	2	0
13	Crusher	Impactor reduction	8 cm x 0 - 3 cm x 0 (3 in x 0 - 1-1/4 in x 0)	2	0
14	As-Fired Coal Sampling System	Swing hammer	N/A	1	1
15	Conveyor No. 4	Belt w/tripper	470 tonne/hr (520 tph)	1	0
16	Transfer Tower No. 2	Enclosed	N/A	1	0
17	Conveyor No. 5	Belt w/ tripper	470 tonne/hr (520 tph)	1	0
18	Coal Silo w/ Vent Filter and Slide Gates	Field erected	1,060 tonne (1,200 ton)	3	0
19	Activated Carbon Storage Silo and Feeder System	Shop assembled	Silo - 11 tonne (13 ton) Feeder - 70 kg/hr (150 lb/hr)	1	0
20	Hydrated Lime Storage Silo and Feeder System	Shop assembled	Silo - 290 tonne (320 ton) Feeder - 1,740 kg/hr (3,840 lb/hr)	1	0
21	Limestone Truck Unloading Hopper	N/A	30 tonne (40 ton)	1	0
22	Limestone Feeder	Belt	117 tonne/hr (129 tph)	1	0
23	Limestone Conveyor No. 1	Belt	117 tonne/hr (129 tph)	1	0
24	Limestone Reclaim Hopper	N/A	23 tonne (25 ton)	1	0
25	Limestone Reclaim Feeder	Belt	92 tonne/hr (101 tph)	1	0
26	Limestone Conveyor No. 2	Belt	92 tonne/hr (101 tph)	1	0
27	Limestone Day Bin	w/ actuator	367 tonne (405 ton)	2	0

Case B11B – Account 2: Coal and Sorbent Preparation and Feed

Equipment No.	Description	Type	Design Condition	Operating Qty.	Spares
1	Coal Feeder	Gravimetric	53 tonne/hr (58 tph)	6	0
2	Coal Pulverizer	Ball type or equivalent	53 tonne/hr (58 tph)	6	0
3	Limestone Weigh Feeder	Gravimetric	31 tonne/hr (34 tph)	1	1
4	Limestone Ball Mill	Rotary	31 tonne/hr (34 tph)	1	1
5	Limestone Mill Slurry Tank with Agitator	N/A	115,800 liters (31,000 gal)	1	1
6	Limestone Mill Recycle Pumps	Horizontal centrifugal	1,950 lpm @ 10m H_2O (510 gpm @ 40 ft H_2O)	1	1
7	Hydroclone Classifier	4 active cyclones in a 5-cyclone bank	490 lpm (130 gpm) per cyclone	1	1
8	Distribution Box	2-way	N/A	1	1
9	Limestone Slurry Storage Tank with Agitator	Field erected	662,000 liters (175,000 gal)	1	1
10	Limestone Slurry Feed Pumps	Horizontal centrifugal	1,380 lpm @ 9m H_2O (360 gpm @ 30 ft H_2O)	1	1

Case B11B – Account 3: Feedwater and Miscellaneous Balance of Plant Systems

Equipment No.	Description	Type	Design Condition	Operating Qty.	Spares
1	Demineralized Water Storage Tank	Vertical, cylindrical, outdoor	1,935,000 liters (511,000 gal)	2	0
2	Condensate Pumps	Vertical canned	24,800 lpm @ 200 m H_2O (6,600 gpm @ 500 ft H_2O)	1	1
3	Deaerator and Storage Tank	Horizontal spray type	2,684,000 kg/hr (5,916,000 lb/hr), 5 min. tank	1	0
4	Boiler Feed Pump/Turbine	Barrel type, multi-stage, centrifugal	44,500 lpm @ 2,300 m H_2O (11,800 gpm @ 7,500 ft H_2O)	1	1
5	Startup Boiler Feed Pump, Electric Motor Driven	Barrel type, multi-stage, centrifugal	13,300 lpm @ 2,300 m H_2O (3,500 gpm @ 7,500 ft H_2O)	1	0
6	LP Feedwater Heater 1A/1B	Horizontal U-tube	740,000 kg/hr (1,630,000 lb/hr)	2	0
7	LP Feedwater Heater 2A/2B	Horizontal U-tube	740,000 kg/hr (1,630,000 lb/hr)	2	0
8	LP Feedwater Heater 3A/3B	Horizontal U-tube	740,000 kg/hr (1,630,000 lb/hr)	2	0
9	LP Feedwater Heater 4A/4B	Horizontal U-tube	740,000 kg/hr (1,630,000 lb/hr)	2	0
10	HP Feedwater Heater 6	Horizontal U-tube	2,650,000 kg/hr (5,850,000 lb/hr)	1	0
11	HP Feedwater Heater 7	Horizontal U-tube	2,650,000 kg/hr (5,850,000 lb/hr)	1	0
12	Auxiliary Boiler	Shop fabricated, water tube	20,000 kg/hr, 2.8 MPa, 343°C (40,000 lb/hr, 400 psig, 650°F)	1	0
13	Gas Pipeline	Underground, coated carbon steel, wrapped cathodic protection	N/A - For Start-up Only	1	0
14	Service Air Compressors	Flooded Screw	28 m3/min @ 0.7 MPa (1,000 scfm @ 100 psig)	2	1
15	Instrument Air Dryers	Duplex, regenerative	28 m3/min (1,000 scfm)	2	1
16	Closed Cycle Cooling Heat Exchangers	Shell and tube	53 GJ/hr (50 MMBtu/hr) each	2	0
17	Closed Cycle Cooling Water Pumps	Horizontal centrifugal	20,800 lpm @ 30 m H_2O (5,500 gpm @ 100 ft H_2O)	2	1
18	Engine-Driven Fire Pump	Vertical turbine, diesel engine	3,785 lpm @ 88 m H_2O (1,000 gpm @ 290 ft H_2O)	1	1
19	Fire Service Booster Pump	Two-stage horizontal centrifugal	2,650 lpm @ 64 m H_2O (700 gpm @ 210 ft H_2O)	1	1
20	Raw Water Pumps	Stainless steel, single suction	10,450 lpm @ 20 m H_2O (2,760 gpm @ 60 ft H_2O)	2	1
21	Ground Water Pumps	Stainless steel, single suction	4,180 lpm @ 270 m H_2O (1,100 gpm @ 880 ft H_2O)	5	1
22	Filtered Water Pumps	Stainless steel, single suction	1,540 lpm @ 50 m H_2O (410 gpm @ 160 ft H_2O)	2	1
23	Filtered Water Tank	Vertical, cylindrical	1,479,000 liter (391,000 gal)	1	0
24	Makeup Water Demineralizer	Multi-media filter, cartridge filter, RO membrane assembly, electrodeionization unit	990 lpm (260 gpm)	1	1

Equipment No.	Description	Type	Design Condition	Operating Qty.	Spares
25	Liquid Waste Treatment System	–	10 years, 24-hour storm	1	0
26	Process Water Treatment	Spray dryer evaporator	Flue Gas - 2,600 m3/min (91,890 acfm) @ 385°C (726°F) & 0.1 MPa (15 psia) Blowdown - 150 lpm (40 gpm) @ 19,999 ppmw Cl^-	2	1

Case B11B – Account 4: Pulverized Coal Boiler and Accessories

Equipment No.	Description	Type	Design Condition	Operating Qty.	Spares
1	Boiler	SubC, drum wall-fired, low NOx burners, overfire air	2,650,000 kg/hr steam @ 16.5 MPa/566°C/566°C (5,850,000 lb/hr steam @ 2,400 psig/1,050°F/1,050°F)	1	0
2	Primary Air Fan	Centrifugal	383,000 kg/hr, 5,200 m^3/min @ 123 cm WG (843,000 lb/hr, 184,300 acfm @ 48 in. WG)	2	0
3	Forced Draft Fan	Centrifugal	1,245,000 kg/hr, 17,000 m^3/min @ 47 cm WG (2,745,000 lb/hr, 600,100 acfm @ 19 in. WG)	2	0
4	Induced Draft Fan	Centrifugal	1,806,000 kg/hr, 36,000 m^3/min @ 93 cm WG (3,981,000 lb/hr, 1,269,700 acfm @ 36 in. WG)	2	0
5	SCR Reactor Vessel	Space for spare layer	3,420,000 kg/hr (7,530,000 lb/hr)	2	0
6	SCR Catalyst	–	–	3	0
7	Dilution Air Blower	Centrifugal	130 m^3/min @ 108 cm WG (4,700 acfm @ 42 in. WG)	2	1
8	Ammonia Storage	Horizontal tank	146,000 liter (39,000 gal)	5	0
9	Ammonia Feed Pump	Centrifugal	28 lpm @ 90 m H_2O (7 gpm @ 300 ft H_2O)	2	1

Case B11B – Account 5: Flue Gas Cleanup

Equipment No.	Description	Type	Design Condition	Operating Qty.	Spares
1	Fabric Filter	Single stage, high-ratio with pulse-jet online cleaning system	1,806,000 kg/hr (3,982,000 lb/hr) 99.9% efficiency	2	0
2	Absorber Module	Counter-current open spray	61,000 m^3/min (2,158,000 acfm)	1	0
3	Recirculation Pumps	Horizontal centrifugal	212,000 lpm @ 65 m H_2O (56,000 gpm @ 210 ft H_2O)	5	1
4	Bleed Pumps	Horizontal centrifugal	5,880 lpm (1,550 gpm) at 20 wt% solids	2	1
5	Oxidation Air Blowers	Centrifugal	1,010 m^3/min @ 0.3 MPa (35,510 acfm @ 37 psia)	2	1
6	Agitators	Side entering	50 hp	5	1
7	Dewatering Cyclones	Radial assembly, 5 units each	1,470 lpm (390 gpm) per cyclone	2	0
8	Vacuum Filter Belt	Horizontal belt	47 tonne/hr (51 tph) of 50 wt% slurry	2	1

Equipment No.	Description	Type	Design Condition	Operating Qty.	Spares
9	Filtrate Water Return Pumps	Horizontal centrifugal	900 lpm @ 13 m H_2O (240 gpm @ 40 ft H_2O)	1	1
10	Filtrate Water Return Storage Tank	Vertical, lined	590,000 lpm (150,000 gal)	1	0
11	Process Makeup Water Pumps	Horizontal centrifugal	2,090 lpm @ 21 m H_2O (550 gpm @ 70 ft H_2O)	1	1
12	Activated Carbon Injectors	---	70 kg/hr (150 lb/hr)	1	0
13	Hydrated Lime Injectors	---	1,740 kg/hr (3,840 lb/hr)	1	0
14	Cansolv	Amine-based CO_2 capture technology	3,917,000 kg/hr (8,635,000 lb/hr) 19.1 wt% CO_2 concentration	1	0
15	Cansolv LP Condensate Pump	Centrifugal	1,325 lpm @ 1 m H_2O (350 gpm @ 4 ft H_2O)	1	1
16	Cansolv IP Condensate Pump	Centrifugal	8 lpm @ 4.6 m H_2O (2 gpm @ 15 ft H_2O)	1	1
17	CO_2 Dryer	Triethylene glycol	Inlet: 160 m^3/min @ 3.0 MPa (5,660 acfm @ 441 psia) Outlet: 2.9 MPa (421 psia) Water Recovered: 512 kg/hr (1,129 lb/hr)	1	0
18	CO_2 Compressor	Integrally geared, multi-stage centrifugal	9.0 m^3/min @ 15.3 MPa, 80°C (314 acfm @ 2,217 psia, 176°F)	2	0
19	CO_2 Aftercooler	Shell and tube heat exchanger	Outlet: 15.3 MPa, 30°C (2,215psia, 86°F) Duty: 93 MMkJ/hr (88 MMBtu/hr)	1	0

Case B11B – Account 7: Ductwork and Stack

Equipment No.	Description	Type	Design Condition	Operating Qty.	Spares
1	Stack	Reinforced concrete with FRP liner	152 m (500 ft) high x 6.1 m (20 ft) diameter	1	0

Case B11B – Account 8: Steam Turbine and Accessories

Equipment No.	Description	Type	Design Condition	Operating Qty.	Spares
1	Steam Turbine	Commercially available advanced steam turbine	804 MW 16.5 MPa/566°C/566°C (2400 psig/ 1050°F/1050°F)	1	0
2	Steam Turbine Generator	Hydrogen cooled, static excitation	890 MVA @ 0.9 p.f., 24 kV, 60 Hz, 3-phase	1	0
3	Surface Condenser	Single pass, divided waterbox including vacuum pumps	1,290 GJ/hr (2,450 MMBtu/hr), Inlet water temperature 16°C (60°F), Water temperature rise 11°C (20°F)	1	0

Case B11B – Account 9: Cooling Water System

Equipment No.	Description	Type	Design Condition	Operating Qty.	Spares
1	Circulating Water Pumps	Vertical, wet pit	1,035,000 lpm @ 30 m (273,000 gpm @ 100 ft)	2	1
2	Cooling Tower	Evaporative, mechanical draft, multi-cell	11°C (51.5°F) wet bulb/ 16°C (60°F) CWT/ 27°C (80°F) HWT/ 5770 GJ/hr (5470 MMBtu/hr) heat duty	1	0

Case B11B – Account 10: Ash and Spent Sorbent Handling System

Equipment No.	Description	Type	Design Condition	Operating Qty.	Spares
1	Economizer Hopper (part of boiler scope of supply)	–	–	4	0
2	Bottom Ash Hopper (part of boiler scope of supply)	–	–	2	0
3	Clinker Grinder	–	6.4 tonne/hr (7 tph)	1	1
4	Pyrites Hopper (part of pulverizer scope of supply included with boiler)	–	–	6	0
5	Pyrites Transfer Tank	–	–	1	0
6	Pyrite Reject Water Pump	–	–	1	0
7	Pneumatic Transport Line	Fully-dry, isolatable	–	4	0
8	Bottom Ash Storage Silo	–	–	1	1
9	Baghouse Hopper (part of baghouse scope of supply)	–	–	24	0
10	Air Heater Hopper (part of boiler scope of supply)	–	–	10	0
11	Air Blower	–	26 m^3/min @ 0.2 MPa (911 scfm @ 24 psi)	1	1
12	Fly Ash Silo	Reinforced concrete	1,690 tonne (1,870 ton)	2	0
13	Slide Gate Valves	–	–	2	0
14	Unloader	–	–	1	0
15	Telescoping Unloading Chute	–	160 tonne/hr (170 tph)	1	0

Case B11B – Account 11: Accessory Electric Plant

Equipment No.	Description	Type	Design Condition	Operating Qty.	Spares
1	STG Transformer	Oil-filled	24 kV/345 kV, 750 MVA, 3-ph, 60 Hz	1	0
2	High Voltage Transformer	Oil-filled	345 kV/13.8 kV, 26 MVA, 3-ph, 60 Hz	2	0
3	Medium Voltage Transformer	Oil-filled	24 kV/4.16 kV, 65 MVA, 3-ph, 60 Hz	1	1
4	Low Voltage Transformer	Dry ventilated	4.16 kV/480 V, 21 MVA, 3-ph, 60 Hz	1	1
5	STG Isolated Phase Bus Duct and Tap Bus	Aluminum, self-cooled	24 kV, 3-ph, 60 Hz	1	0
6	Medium Voltage Switchgear	Metal clad	4.16 kV, 3-ph, 60 Hz	1	1
7	Low Voltage Switchgear	Metal enclosed	480 V, 3-ph, 60 Hz	1	1
8	Emergency Diesel Generator	Sized for emergency shutdown	750 kW, 480 V, 3-ph, 60 Hz	1	0

Case B11B – Account 12: Instrumentation and Control

Equipment No.	Description	Type	Design Condition	Operating Qty.	Spares
1	DCS - Main Control	Monitor/keyboard; Operator printer (laser color); Engineering printer (laser B&W)	Operator stations/printers and engineering stations/printers	1	0
2	DCS - Processor	Microprocessor with redundant input/output	N/A	1	0
3	DCS - Data Highway	Fiber optic	Fully redundant, 25% spare	1	0

4.2.10 Case B11B – Cost Estimating

The cost estimating methodology was described previously in Section 2.7. Exhibit 4-43 shows a detailed breakdown of the capital costs; Exhibit 4-44 shows the owner's costs, TOC, and TASC; Exhibit 4-45 shows the initial and annual O&M costs; and Exhibit 4-46 shows the LCOE breakdown.

The estimated TPC of the SubC PC boiler with CO_2 capture is $3,756/kW. Process contingency represents 3.4 percent of the TPC and project contingency represents 14.0 percent. The LCOE, including CO_2 T&S costs of $9.4/MWh, is $115.7/MWh.

Exhibit 4-43. Case B11B total plant cost details

Case:		B11B	– SubC PC w/ CO_2				Estimate Type:			Conceptual	
Plant Size (MW, net):		650					Cost Base:			Dec 2018	
Item No.	Description	Equipment Cost	Material Cost	Labor		Bare Erected Cost	Eng'g CM H.O.& Fee	Contingencies		Total Plant Cost	
				Direct	Indirect			Process	Project	$/1,000	$/kW
1	Coal & Sorbent Handling										
1.1	Coal Receive & Unload	$1,214	$0	$547	$0	$1,761	$308	$0	$310	$2,379	$4
1.2	Coal Stackout & Reclaim	$3,985	$0	$891	$0	$4,876	$853	$0	$859	$6,588	$10
1.3	Coal Conveyors	$36,717	$0	$8,729	$0	$45,446	$7,953	$0	$8,010	$61,409	$95
1.4	Other Coal Handling	$5,104	$0	$1,074	$0	$6,178	$1,081	$0	$1,089	$8,348	$13
1.5	Sorbent Receive & Unload	$234	$0	$69	$0	$303	$53	$0	$53	$410	$1
1.6	Sorbent Stackout & Reclaim	$1,709	$0	$309	$0	$2,017	$353	$0	$356	$2,726	$4
1.7	Sorbent Conveyors	$2,589	$563	$627	$0	$3,779	$661	$0	$666	$5,106	$8
1.8	Other Sorbent Handling	$124	$29	$64	$0	$218	$38	$0	$38	$295	$0
1.9	Coal & Sorbent Handling Foundations	$0	$1,592	$2,099	$0	$3,690	$646	$0	$650	$4,987	$8
	Subtotal	**$51,675**	**$2,184**	**$14,409**	**$0**	**$68,268**	**$11,947**	**$0**	**$12,032**	**$92,247**	**$142**
2	Coal & Sorbent Preparation & Feed										
2.1	Coal Crushing & Drying	$2,614	$0	$502	$0	$3,116	$545	$0	$549	$4,211	$6
2.2	Prepared Coal Storage & Feed	$8,798	$0	$1,895	$0	$10,693	$1,871	$0	$1,885	$14,449	$22
2.5	Sorbent Preparation Equipment	$1,150	$50	$236	$0	$1,436	$251	$0	$253	$1,940	$3
2.6	Sorbent Storage & Feed	$1,926	$0	$729	$0	$2,656	$465	$0	$468	$3,588	$6
2.9	Coal & Sorbent Feed Foundation	$0	$764	$670	$0	$1,433	$251	$0	$253	$1,937	$3
	Subtotal	**$14,489**	**$813**	**$4,032**	**$0**	**$19,334**	**$3,383**	**$0**	**$3,408**	**$26,125**	**$40**
3	Feedwater & Miscellaneous BOP Systems										
3.1	Feedwater System	$3,964	$6,796	$3,398	$0	$14,158	$2,478	$0	$2,495	$19,131	$29
3.2	Water Makeup & Pretreating	$8,702	$870	$4,931	$0	$14,503	$2,538	$0	$3,408	$20,449	$31
3.3	Other Feedwater Subsystems	$3,080	$1,010	$959	$0	$5,050	$884	$0	$890	$6,824	$11
3.4	Service Water Systems	$2,778	$5,303	$17,170	$0	$25,250	$4,419	$0	$5,934	$35,603	$55
3.5	Other Boiler Plant Systems	$759	$276	$690	$0	$1,725	$302	$0	$304	$2,331	$4
3.6	Natural Gas Pipeline and Start-Up System	$3,547	$153	$114	$0	$3,814	$667	$0	$672	$5,153	$8
3.7	Waste Water Treatment Equipment	$15,810	$0	$9,690	$0	$25,500	$4,462	$0	$5,992	$35,955	$55
3.8	Spray Dryer Evaporator	$17,238	$0	$9,979	$0	$27,217	$4,763	$0	$6,396	$38,376	$59
3.9	Miscellaneous Plant Equipment	$203	$27	$103	$0	$332	$58	$0	$78	$468	$1
	Subtotal	**$56,080**	**$14,434**	**$47,035**	**$0**	**$117,549**	**$20,571**	**$0**	**$26,170**	**$164,290**	**$253**
4	Pulverized Coal Boiler & Accessories										
4.9	Pulverized Coal Boiler & Accessories	$228,456	$0	$149,195	$0	$377,651	$66,089	$0	$66,561	$510,301	$785

Case:		B11B	– SubC PC w/ CO_2				Estimate Type:			Conceptual	
Plant Size (MW, net):		650					Cost Base:			Dec 2018	
Item No.	Description	Equipment Cost	Material Cost	Labor		Bare Erected Cost	Eng'g CM H.O.& Fee	Contingencies		Total Plant Cost	
				Direct	Indirect			Process	Project	$/1,000	$/kW
4.10	Selective Catalytic Reduction System	$28,855	$0	$18,844	$0	$47,699	$8,347	$0	$8,407	$64,453	$99
4.11	Boiler Balance of Plant	$1,601	$0	$1,045	$0	$2,646	$463	$0	$466	$3,575	$6
4.12	Primary Air System	$1,669	$0	$1,090	$0	$2,758	$483	$0	$486	$3,727	$6
4.13	Secondary Air System	$2,528	$0	$1,651	$0	$4,178	$731	$0	$736	$5,646	$9
4.14	Induced Draft Fans	$5,387	$0	$3,518	$0	$8,906	$1,558	$0	$1,570	$12,034	$19
4.15	Major Component Rigging	$91	$0	$60	$0	$151	$26	$0	$27	$204	$0
4.16	Boiler Foundations	$0	$414	$363	$0	$777	$136	$0	$137	$1,050	$2
	Subtotal	**$268,587**	**$414**	**$175,766**	**$0**	**$444,766**	**$77,834**	**$0**	**$78,390**	**$600,990**	**$925**
5						Flue Gas Cleanup					
5.1	Cansolv Carbon Dioxide (CO_2) Removal System	$206,534	$89,010	$186,922	$0	$482,466	$84,431	$82,019	$113,560	$762,477	$1,174
5.2	WFGD Absorber Vessels & Accessories	$82,375	$0	$17,613	$0	$99,988	$17,498	$0	$17,623	$135,109	$208
5.3	Other FGD	$370	$0	$416	$0	$786	$137	$0	$138	$1,062	$2
5.4	Carbon Dioxide (CO_2) Compression & Drying	$42,846	$6,427	$14,107	$0	$63,381	$11,092	$0	$14,895	$89,367	$138
5.5	Carbon Dioxide (CO_2) Compressor Aftercooler	$473	$75	$203	$0	$750	$131	$0	$176	$1,058	$2
5.6	Mercury Removal (Dry Sorbent Injection/Activated Carbon Injection)	$2,729	$601	$2,684	$0	$6,014	$1,052	$0	$1,060	$8,126	$13
5.9	Particulate Removal (Bag House & Accessories)	$1,584	$0	$998	$0	$2,582	$452	$0	$455	$3,489	$5
5.12	Gas Cleanup Foundations	$0	$206	$180	$0	$386	$68	$0	$68	$522	$1
5.13	Gypsum Dewatering System	$787	$0	$133	$0	$920	$161	$0	$162	$1,243	$2
	Subtotal	**$337,698**	**$96,319**	**$223,256**	**$0**	**$657,272**	**$115,023**	**$82,019**	**$148,138**	**$1,002,452**	**$1,543**
7						Ductwork & Stack					
7.3	Ductwork	$0	$758	$527	$0	$1,284	$225	$0	$226	$1,735	$3
7.4	Stack	$8,793	$0	$5,110	$0	$13,903	$2,433	$0	$2,450	$18,786	$29
7.5	Duct & Stack Foundations	$0	$211	$250	$0	$461	$81	$0	$108	$649	$1
	Subtotal	**$8,793**	**$968**	**$5,887**	**$0**	**$15,648**	**$2,738**	**$0**	**$2,785**	**$21,171**	**$33**
8						Steam Turbine & Accessories					
8.1	Steam Turbine Generator & Accessories	$65,201	$0	$7,470	$0	$72,671	$12,717	$0	$12,808	$98,196	$151
8.2	Steam Turbine Plant Auxiliaries	$1,486	$0	$3,160	$0	$4,646	$813	$0	$819	$6,278	$10
8.3	Condenser & Auxiliaries	$12,858	$0	$4,363	$0	$17,221	$3,014	$0	$3,035	$23,269	$36
8.4	Steam Piping	$38,225	$0	$15,493	$0	$53,718	$9,401	$0	$9,468	$72,586	$112
8.5	Turbine Generator Foundations	$0	$232	$383	$0	$615	$108	$0	$144	$867	$1

Case:	B11B	– SubC PC w/ CO_2					Estimate Type:			Conceptual	
Plant Size (MW, net):	650						Cost Base:			Dec 2018	
Item No.	Description	Equipment Cost	Material Cost	Labor		Bare Erected Cost	Eng'g CM H.O.& Fee	Contingencies		Total Plant Cost	
				Direct	Indirect			Process	Project	$/1,000	$/kW
	Subtotal	**$117,770**	**$232**	**$30,868**	**$0**	**$148,869**	**$26,052**	**$0**	**$26,274**	**$201,196**	**$310**
9						Cooling Water System					
9.1	Cooling Towers	$21,160	$0	$6,544	$0	$27,704	$4,848	$0	$4,883	$37,436	$58
9.2	Circulating Water Pumps	$3,034	$0	$214	$0	$3,248	$568	$0	$573	$4,389	$7
9.3	Circulating Water System Auxiliaries	$17,431	$0	$2,306	$0	$19,737	$3,454	$0	$3,479	$26,669	$41
9.4	Circulating Water Piping	$0	$8,060	$7,300	$0	$15,360	$2,688	$0	$2,707	$20,755	$32
9.5	Make-up Water System	$1,340	$0	$1,721	$0	$3,061	$536	$0	$540	$4,136	$6
9.6	Component Cooling Water System	$1,256	$0	$964	$0	$2,220	$388	$0	$391	$2,999	$5
9.7	Circulating Water System Foundations	$0	$747	$1,240	$0	$1,987	$348	$0	$467	$2,802	$4
	Subtotal	**$44,221**	**$8,807**	**$20,289**	**$0**	**$73,318**	**$12,831**	**$0**	**$13,039**	**$99,187**	**$153**
10						Ash & Spent Sorbent Handling Systems					
10.6	Ash Storage Silos	$1,205	$0	$3,687	$0	$4,893	$856	$0	$862	$6,611	$10
10.7	Ash Transport & Feed Equipment	$4,100	$0	$4,065	$0	$8,165	$1,429	$0	$1,439	$11,033	$17
10.9	Ash/Spent Sorbent Foundation	$0	$840	$1,034	$0	$1,874	$328	$0	$440	$2,643	$4
	Subtotal	**$5,306**	**$840**	**$8,786**	**$0**	**$14,932**	**$2,613**	**$0**	**$2,742**	**$20,287**	**$31**
11						Accessory Electric Plant					
11.1	Generator Equipment	$2,683	$0	$2,024	$0	$4,708	$824	$0	$830	$6,361	$10
11.2	Station Service Equipment	$7,882	$0	$676	$0	$8,558	$1,498	$0	$1,508	$11,565	$18
11.3	Switchgear & Motor Control	$12,236	$0	$2,123	$0	$14,359	$2,513	$0	$2,531	$19,403	$30
11.4	Conduit & Cable Tray	$0	$1,591	$4,584	$0	$6,175	$1,081	$0	$1,088	$8,344	$13
11.5	Wire & Cable	$0	$4,213	$7,530	$0	$11,742	$2,055	$0	$2,070	$15,867	$24
11.6	Protective Equipment	$55	$0	$191	$0	$246	$43	$0	$43	$332	$1
11.7	Standby Equipment	$829	$0	$766	$0	$1,595	$279	$0	$281	$2,155	$3
11.8	Main Power Transformers	$7,049	$0	$144	$0	$7,193	$1,259	$0	$1,268	$9,719	$15
11.9	Electrical Foundations	$0	$224	$569	$0	$793	$139	$0	$186	$1,119	$2
	Subtotal	**$30,736**	**$6,027**	**$18,607**	**$0**	**$55,370**	**$9,690**	**$0**	**$9,806**	**$74,866**	**$115**
12						Instrumentation & Control					
12.1	Pulverized Coal Boiler Control Equipment	$815	$0	$145	$0	$960	$168	$0	$169	$1,297	$2
12.3	Steam Turbine Control Equipment	$728	$0	$83	$0	$811	$142	$0	$143	$1,096	$2
12.5	Signal Processing Equipment	$925	$0	$165	$0	$1,090	$191	$0	$192	$1,472	$2
12.6	Control Boards, Panels & Racks	$283	$0	$173	$0	$456	$80	$23	$84	$642	$1
12.7	Distributed Control System Equipment	$7,981	$0	$1,423	$0	$9,405	$1,646	$470	$1,728	$13,249	$20
12.8	Instrument Wiring & Tubing	$559	$447	$1,788	$0	$2,794	$489	$140	$513	$3,937	$6

Case:	B11B	– SubC PC w/ CO_2					Estimate Type:			Conceptual	
Plant Size (MW, net):	650						Cost Base:			Dec 2018	
Item No.	Description	Equipment Cost	Material Cost	Labor		Bare Erected Cost	Eng'g CM H.O.& Fee	Contingencies		Total Plant Cost	
				Direct	Indirect			Process	Project	$/1,000	$/kW
12.9	Other Instrumentation & Controls Equipment	$687	$0	$1,591	$0	$2,278	$399	$114	$419	$3,209	$5
	Subtotal	**$11,977**	**$447**	**$5,369**	**$0**	**$17,793**	**$3,114**	**$747**	**$3,248**	**$24,902**	**$38**
13	Improvements to Site										
13.1	Site Preparation	$0	$468	$9,951	$0	$10,419	$1,823	$0	$2,449	$14,691	$23
13.2	Site Improvements	$0	$2,317	$3,062	$0	$5,380	$941	$0	$1,264	$7,585	$12
13.3	Site Facilities	$2,648	$0	$2,778	$0	$5,426	$950	$0	$1,275	$7,651	$12
	Subtotal	**$2,648**	**$2,786**	**$15,792**	**$0**	**$21,225**	**$3,714**	**$0**	**$4,988**	**$29,928**	**$46**
14	Buildings & Structures										
14.2	Boiler Building	$0	$11,588	$10,183	$0	$21,771	$3,810	$0	$3,837	$29,418	$45
14.3	Steam Turbine Building	$0	$16,106	$15,001	$0	$31,107	$5,444	$0	$5,483	$42,033	$65
14.4	Administration Building	$0	$1,046	$1,106	$0	$2,152	$377	$0	$379	$2,909	$4
14.5	Circulation Water Pumphouse	$0	$199	$158	$0	$357	$62	$0	$63	$482	$1
14.6	Water Treatment Buildings	$0	$498	$454	$0	$952	$167	$0	$168	$1,286	$2
14.7	Machine Shop	$0	$553	$371	$0	$923	$162	$0	$163	$1,248	$2
14.8	Warehouse	$0	$415	$416	$0	$831	$145	$0	$146	$1,123	$2
14.9	Other Buildings & Structures	$0	$291	$248	$0	$539	$94	$0	$95	$728	$1
14.10	Waste Treating Building & Structures	$0	$646	$1,962	$0	$2,608	$456	$0	$460	$3,525	$5
	Subtotal	**$0**	**$31,342**	**$29,899**	**$0**	**$61,241**	**$10,717**	**$0**	**$10,794**	**$82,752**	**$127**
	Total	**$949,980**	**$165,613**	**$599,993**	**$0**	**$1,715,585**	**$300,227**	**$82,766**	**$341,813**	**$2,440,392**	**$3,756**

Exhibit 4-44. Case B11B owner's costs

Description	$/1,000	$/kW
Pre-Production Costs		
6 Months All Labor	$14,237	$22
1 Month Maintenance Materials	$2,297	$4
1 Month Non-Fuel Consumables	$3,518	$5
1 Month Waste Disposal	$1,051	$2
25% of 1 Months Fuel Cost at 100% CF	$3,008	$5
2% of TPC	$48,808	$75
Total	**$72,919**	**$112**
Inventory Capital		
60-day supply of fuel and consumables at 100% CF	$30,215	$47
0.5% of TPC (spare parts)	$12,202	$19
Total	**$42,417**	**$65**
Other Costs		
Initial Cost for Catalyst and Chemicals	$2,747	$4
Land	$900	$1
Other Owner's Costs	$366,059	$563
Financing Costs	$65,891	$101
Total Overnight Costs (TOC)	**$2,991,325**	**$4,604**
TASC Multiplier (IOU, 35 year)	1.154	
Total As-Spent Cost (TASC)	**$3,453,220**	**$5,315**

Exhibit 4-45. Case B11B initial and annual operating and maintenance costs

Case:	B11B	– SubC PC w/ CO_2			Cost Base:	Dec 2018
Plant Size (MW, net):	650	Heat Rate-net (Btu/kWh):		11,393	Capacity Factor (%):	85
Operating & Maintenance Labor						
Operating Labor				**Operating Labor Requirements per Shift**		
Operating Labor Rate (base):		38.50	**$/hour**	Skilled Operator:	2.0	
Operating Labor Burden:		30.00	**% of base**	Operator:	11.3	
Labor O-H Charge Rate:		25.00	**% of labor**	Foreman:	1.0	
				Lab Techs, etc.:	2.0	
				Total:	**16.3**	
Fixed Operating Costs						
					Annual Cost	
					($)	**($/kW-net)**
Annual Operating Labor:					$7,161,008	$11.023
Maintenance Labor:					$15,618,508	$24.041
Administrative & Support Labor:					$5,694,879	$8.766
Property Taxes and Insurance:					$48,807,838	$75.127
Total:					**$77,282,233**	**$118.956**
Variable Operating Costs						
					($)	**($/MWh-net)**
Maintenance Material:					$23,427,762	$4.84301
Consumables						
	Initial Fill	**Per Day**	**Per Unit**	**Initial Fill**		
Water (/1000 gallons):	0	7,657	$1.90	$0	$4,513,327	$0.93300
Makeup and Waste Water Treatment Chemicals (ton):	0	22.8	$550.00	$0	$3,891,848	$0.80453
Brominated Activated Carbon (ton):	0	1.64	$1,600.00	$0	$812,652	$0.16799
Enhanced Hydrated Lime (ton):	0	41.9	$240.00	$0	$3,120,896	$0.64515
Limestone (ton):	0	736	$22.00	$0	$5,026,784	$1.03914
Ammonia (19 wt%, ton):	0	73.4	$300.00	$0	$6,831,155	$1.41214
SCR Catalyst (ft^3):	18,315	16.7	$150.00	$2,747,227	$778,381	$0.16091
CO_2 Capture System Chemicals[A]	Proprietary				$9,702,623	$2.00573
Triethylene Glycol (gal):	w/equip.	572	$6.80	$0	$1,206,658	$0.24944
Subtotal:				**$2,747,227**	**$35,884,324**	**$7.41804**
Waste Disposal						
Fly Ash (ton)	0	691	$38.00	$0	$8,145,181	$1.68378
Bottom Ash (ton)	0	153	$38.00	$0	$1,809,389	$0.37404
SCR Catalyst (ft^3):	0	16.7	$2.50	$0	$12,973	$0.00268
Triethylene Glycol (gal):	0	572	$0.35	$0	$62,107	$0.01284
Thermal Reclaimer Unit Waste (ton)	0	3.69	$38.00	$0	$43,536	$0.00900
Prescrubber Blowdown Waste (ton)	0	54.8	$38.00	$0	$646,250	$0.13359
Subtotal:				**$0**	**$10,719,435**	**$2.21593**
By-Products						
Gypsum (ton)	0	1119	$0.00	$0	$0	$0.00000
Subtotal:				**$0**	**$0**	**$0.00000**
Variable Operating Costs Total:				**$2,747,227**	**$70,031,521**	**$14.47697**
Fuel Cost						
Illinois Number 6 (ton):	0	7,613	$51.96	$0	$122,727,420	$25.37031
Total:				**$0**	**$122,727,420**	**$25.37031**

[A]CO_2 Capture System Chemicals includes NaOH and Cansolv Solvent

Exhibit 4-46. Case B11B LCOE breakdown

Component	Value, $/MWh	Percentage
Capital	50.5	44%
Fixed	16.0	14%
Variable	14.5	13%
Fuel	25.4	22%
Total (Excluding T&S)	**106.3**	**N/A**
CO_2 T&S	9.4	8%
Total (Including T&S)	**115.7**	**N/A**

4.3 SUPERCRITICAL PC CASES

This section contains an evaluation of plant designs for cases B12A and B12B, which are based on a SC PC plant with a nominal net output of 650 MWe. Both plants use a single reheat 24.1 MPa/593°C/593°C (3,500 psig/1,100°F/1,100°F) cycle. The only difference between the two plants is that Case B12B includes CO_2 capture while Case B12A does not.

The balance of this section is organized in an analogous manner to the SubC PC section:

- Key Assumptions for cases B12A and B12B
- Sparing Philosophy for cases B12A and B12B
- Process and System Description for Case B12A
- Performance Results for Case B12A
- Equipment List for Case B12A
- Cost Estimates for Case B12A
- Process and System Description, Performance Results, Equipment List and Cost Estimates for Case B12B

4.3.1 Key System Assumptions

System assumptions for cases B12A and B12B, SC PC with and without CO_2 capture, are compiled in Exhibit 4-47.

Exhibit 4-47. SC PC plant study configuration matrix

	Case B12A w/o CO_2 Capture	Case B12B w/CO_2 Capture
Steam Cycle, MPa/°C/°C (psig/°F/°F)	24.1/593/593 (3,500/1,100/1,100)	
Coal	Illinois No. 6	
Condenser pressure, mm Hg (in. Hg)	50.8 (2)	
Boiler Efficiency, HHV %	88.1	
Carbon Conversion, %	99.4	
Cooling water to condenser, °C (°F)	16 (60)	
Cooling water from condenser, °C (°F)	27 (80)	
Stack temperature, °C (°F)	57 (134)	30 (87)
SO_2 Control	Wet Limestone Forced Oxidation	
FGD Efficiency, %[A]	98	98[B, C]
FGD Blowdown Treatment (Effluent Limitation Guidelines)	Spray dryer evaporator	
NOx Control	LNB w/OFA, SCR	
SCR Efficiency, %[A]	75.1	78.1
Ammonia Slip (end of catalyst life), ppmv	2	
Particulate Control	Fabric Filter	
Fabric Filter efficiency, %[A]	99.9	
Ash Distribution, Fly/Bottom	80%/20%	
SO_3 Control	DSI	
Mercury Control	Co-benefit Capture and ACI	
CO_2 Control	N/A	Cansolv
Overall Carbon Capture[A]	N/A	90%
CO_2 Sequestration	N/A	Off-site Saline Formation

[A]Removal efficiencies are based on the flue gas content
[B]An SO_2 polishing step is included to meet more stringent SOx content limits in the flue gas (~2 ppmv) to reduce formation of amine HSS during the CO_2 absorption process
[C]SO_2 exiting the post-FGD polishing step is absorbed in the CO_2 capture process making stack emissions negligible

4.3.1.1 Balance of Plant – Case B12A and Case B12B

The balance of plant assumptions are common to both cases and were presented previously in Exhibit 4-16.

4.3.2 Sparing Philosophy

Single trains are used throughout the design with exceptions where equipment capacity requires an additional train. There is no redundancy other than normal sparing of rotating equipment. The plant design consists of the following major subsystems:

- One dry-bottom, wall-fired SC PC boiler (1 x 100 percent)
- Two SCR reactors (2 x 50 percent)
- One DSI system (1 x 100 percent)
- One ACI system (1 x 100 percent)
- Two single-stage, in-line, multi-compartment fabric filters (2 x 50 percent)
- One wet limestone forced oxidation positive pressure absorber (1 x 100 percent)
- One steam turbine (1 x 100 percent)
- For Case B12B only, one CO_2 absorption system, consisting of an absorber, stripper, and ancillary equipment (1 x 100 percent) and two CO_2 compression systems (2 x 50 percent)

4.3.3 Process Description

In this section, the SC PC process without CO_2 capture is described. The system description is nearly identical to the SubC PC case without CO_2 capture but is repeated here for completeness. The description follows the BFD in Exhibit 4-48 and stream numbers reference the same exhibit. Exhibit 4-49 provides process data for the numbered streams in the BFD.

Coal (stream 8) and PA (stream 4) are introduced into the boiler through the wall-fired burners. Additional combustion air, including the OFA, is provided by the FD fans (stream 1). The boiler operates at a slight negative pressure, so air leakage is into the boiler, and the infiltration air is accounted for in stream 7. Streams 3 and 6 show Ljungstrom air preheater leakages from the FD and PA fan outlet streams to the boiler exhaust.

Flue gas exits the boiler through the SCR reactor where hydrated lime is injected (stream 10) for the reduction of SO_3. A small flue gas stream is extracted for use in the SDE (stream 11). The flue gas then passes through the combustion air preheater (where the air preheater leakages are introduced) and is cooled to 143°C (289°F) (stream 12) before PAC is injected (stream 13) for mercury reduction. The flue gas then passes through a fabric filter for particulate removal (stream 16). An ID fan increases the flue gas temperature to 154°C (309°F) and provides the motive force for the flue gas (stream 17) to pass through the FGD unit. FGD inputs and outputs include makeup water (stream 18), oxidation air (stream 19), limestone slurry (stream 23), and product gypsum (stream 21). The clean, saturated flue gas exiting the FGD unit (stream 20) passes to the plant stack and is discharged to the atmosphere. The FGD blowdown (stream 22) is sent to the SDE where extracted flue gas (stream 11) is used to evaporate the FGD blowdown stream. The SDE outlet gas stream is recombined into the flue gas path after the air preheater, and before PAC injection.

Exhibit 4-48. Case B12A block flow diagram, SC unit without CO_2 capture

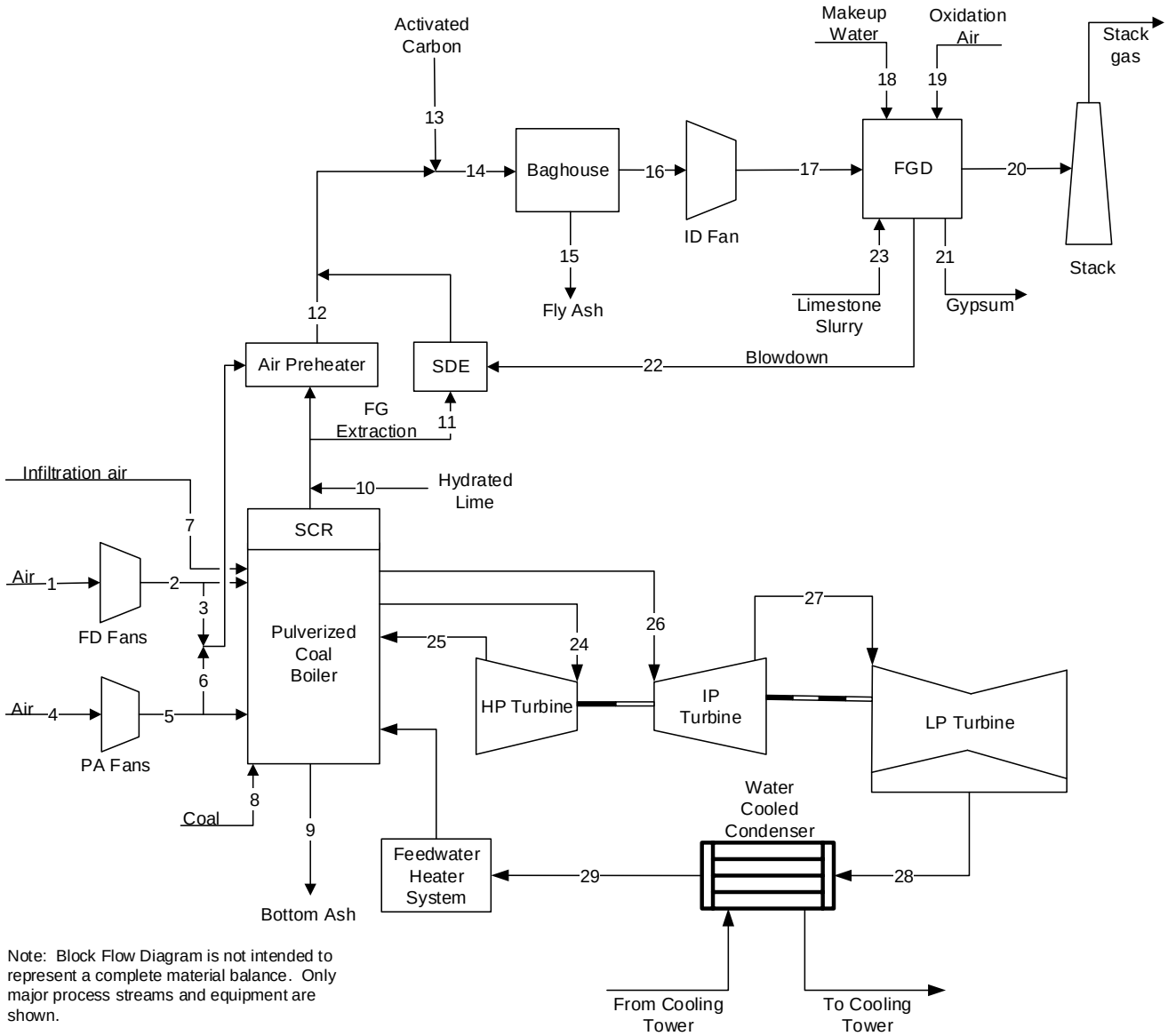

Note: Block Flow Diagram is not intended to represent a complete material balance. Only major process streams and equipment are shown.

Exhibit 4-49. Case B12A stream table, SC unit without capture

	1	2	3	4	5	6	7	8	9	10	11	12	13	14	15
V-L Mole Fraction															
Ar	0.0092	0.0092	0.0092	0.0092	0.0092	0.0092	0.0092	0.0000	0.0000	0.0000	0.0087	0.0088	0.0000	0.0087	0.0000
CO_2	0.0003	0.0003	0.0003	0.0003	0.0003	0.0003	0.0003	0.0000	0.0000	0.0000	0.1457	0.1379	0.0000	0.1372	0.0000
H_2	0.0000	0.0000	0.0000	0.0000	0.0000	0.0000	0.0000	0.0000	0.0000	0.0000	0.0000	0.0000	0.0000	0.0000	0.0000
H_2O	0.0099	0.0099	0.0099	0.0099	0.0099	0.0099	0.0099	0.0000	0.0000	1.0000	0.0879	0.0837	0.0000	0.0911	0.0000
HCl	0.0000	0.0000	0.0000	0.0000	0.0000	0.0000	0.0000	0.0000	0.0000	0.0000	0.0001	0.0001	0.0000	0.0001	0.0000
N_2	0.7732	0.7732	0.7732	0.7732	0.7732	0.7732	0.7732	0.0000	0.0000	0.0000	0.7318	0.7340	0.0000	0.7281	0.0000
O_2	0.2074	0.2074	0.2074	0.2074	0.2074	0.2074	0.2074	0.0000	0.0000	0.0000	0.0237	0.0336	0.0000	0.0329	0.0000
SO_2	0.0000	0.0000	0.0000	0.0000	0.0000	0.0000	0.0000	0.0000	0.0000	0.0000	0.0021	0.0020	0.0000	0.0020	0.0000
SO_3	0.0000	0.0000	0.0000	0.0000	0.0000	0.0000	0.0000	0.0000	0.0000	0.0000	0.0000	0.0000	0.0000	0.0000	0.0000
NaCl	0.0000	0.0000	0.0000	0.0000	0.0000	0.0000	0.0000	0.0000	0.0000	0.0000	0.0000	0.0000	0.0000	0.0000	0.1142
$CaCl_2$	0.0000	0.0000	0.0000	0.0000	0.0000	0.0000	0.0000	0.0000	0.0000	0.0000	0.0000	0.0000	0.0000	0.0001	0.8858
Total	1.0000	1.0000	1.0000	1.0000	1.0000	1.0000	1.0000	0.0000	0.0000	1.0000	1.0000	1.0000	0.0000	1.0000	1.0000
V-L Flowrate (kg_{mol}/hr)	58,373	58,373	1,729	17,932	17,932	2,468	1,290	0	0	1	3,845	78,033	0	82,528	5
V-L Flowrate (kg/hr)	1,684,480	1,684,480	49,892	517,455	517,455	71,215	37,233	0	0	12	114,345	2,317,137	0	2,443,518	528
Solids Flowrate (kg/hr)	0	0	0	0	0	0	0	214,112	4,316	1,167	924	17,737	46	18,890	18,902
Temperature (°C)	15	19	19	15	25	25	15	15	1,316	15	385	143	15	143	143
Pressure (MPa, abs)	0.10	0.11	0.11	0.10	0.11	0.11	0.10	0.10	0.10	0.10	0.10	0.10	0.10	0.10	0.10
Steam Table Enthalpy (kJ/kg)[A]	30.23	34.36	34.36	30.23	40.78	40.78	30.23	---	---	---	---	---	---	---	---
AspenPlus Enthalpy (kJ/kg)[B]	-97.58	-93.45	-93.45	-97.58	-87.03	-87.03	-97.58	-2,119.02	-1,267.06	-13,402.95	-2,261.17	-2,394.16	-6.79	-2,452.91	-1,065.86
Density (kg/m³)	1.2	1.2	1.2	1.2	1.3	1.3	1.2	---	---	1,003.6	0.5	0.9	---	0.9	2,150.2
V-L Molecular Weight	28.857	28.857	28.857	28.857	28.857	28.857	28.857	---	---	18.015	29.742	29.694	---	29.608	104.985
V-L Flowrate (lb_{mol}/hr)	128,691	128,691	3,812	39,533	39,533	5,441	2,845	0	0	1	8,476	172,033	0	181,944	11
V-L Flowrate (lb/hr)	3,713,642	3,713,642	109,992	1,140,792	1,140,792	157,002	82,085	0	0	26	252,087	5,108,413	0	5,387,034	1,164
Solids Flowrate (lb/hr)	0	0	0	0	0	0	0	472,037	9,516	2,573	2,036	39,103	102	41,644	41,672
Temperature (°F)	59	66	66	59	78	78	59	59	2,400	59	726	289	59	289	289
Pressure (psia)	14.7	15.3	15.3	14.7	16.1	16.1	14.7	14.7	14.6	14.7	14.6	14.4	14.7	14.4	14.4
Steam Table Enthalpy (Btu/lb)[A]	13.0	14.8	14.8	13.0	17.5	17.5	13.0	---	---	---	---	---	---	---	---
AspenPlus Enthalpy (Btu/lb)[B]	-42.0	-40.2	-40.2	-42.0	-37.4	-37.4	-42.0	-911.0	544.7	-5,762.2	-972.1	-1,029.3	-2.9	-1,054.6	-458.2
Density (lb/ft³)	0.076	0.078	0.078	0.076	0.081	0.081	0.076	---	---	62.650	0.034	0.053	---	0.053	134.233

[A]Steam table reference conditions are 32.02°F & 0.089 psia

[B]Aspen thermodynamic reference state is the component's constituent elements in an ideal gas state at 25°C and 1 atm

Exhibit 4-49. Case B12A stream table, SC unit without capture (continued)

	16	17	18	19	20	21	22	23	24	25	26	27	28	29
V-L Mole Fraction														
Ar	0.0087	0.0087	0.0000	0.0092	0.0081	0.0000	0.0000	0.0000	0.0000	0.0000	0.0000	0.0000	0.0000	0.0000
CO_2	0.1372	0.1372	0.0000	0.0003	0.1246	0.0001	0.0000	0.0000	0.0000	0.0000	0.0000	0.0000	0.0000	0.0000
H_2	0.0000	0.0000	0.0000	0.0000	0.0000	0.0000	0.0000	0.0000	0.0000	0.0000	0.0000	0.0000	0.0000	0.0000
H_2O	0.0911	0.0911	0.9967	0.0099	0.1497	0.9998	0.9943	0.9999	1.0000	1.0000	1.0000	1.0000	1.0000	1.0000
HCl	0.0001	0.0001	0.0000	0.0000	0.0000	0.0000	0.0000	0.0000	0.0000	0.0000	0.0000	0.0000	0.0000	0.0000
N_2	0.7281	0.7281	0.0000	0.7732	0.6812	0.0000	0.0000	0.0000	0.0000	0.0000	0.0000	0.0000	0.0000	0.0000
O_2	0.0329	0.0329	0.0000	0.2074	0.0364	0.0000	0.0000	0.0000	0.0000	0.0000	0.0000	0.0000	0.0000	0.0000
SO_2	0.0020	0.0020	0.0000	0.0000	0.0000	0.0000	0.0000	0.0000	0.0000	0.0000	0.0000	0.0000	0.0000	0.0000
SO_3	0.0000	0.0000	0.0000	0.0000	0.0000	0.0000	0.0000	0.0000	0.0000	0.0000	0.0000	0.0000	0.0000	0.0000
NaCl	0.0000	0.0000	0.0005	0.0000	0.0000	0.0001	0.0009	0.0001	0.0000	0.0000	0.0000	0.0000	0.0000	0.0000
$CaCl_2$	0.0000	0.0000	0.0028	0.0000	0.0000	0.0000	0.0048	0.0000	0.0000	0.0000	0.0000	0.0000	0.0000	0.0000
Total	1.0000	1.0000	1.0000	1.0000	1.0000	1.0000	1.0000	1.0000	1.0000	1.0000	1.0000	1.0000	1.0000	1.0000
V-L Flowrate (kg_{mol}/hr)	82,523	82,523	11,343	3,455	92,135	194	651	2,685	104,712	87,540	87,540	75,438	57,177	75,649
V-L Flowrate (kg/hr)	2,442,977	2,442,977	207,556	99,687	2,649,265	3,500	12,036	48,383	1,886,415	1,577,053	1,577,053	1,359,039	1,030,068	1,362,835
Solids Flowrate (kg/hr)	0	0	1,871	0	0	31,482	183	20,712	0	0	0	0	0	0
Temperature (°C)	143	154	27	15	57	15	57	15	593	342	593	270	38	39
Pressure (MPa, abs)	0.10	0.11	0.10	0.10	0.10	0.10	0.10	0.10	24.23	4.90	4.80	0.52	0.01	1.32
Steam Table Enthalpy (kJ/kg)[A]	287.72	299.40	---	30.23	294.95	---	---	---	3,477.96	3,049.81	3,652.36	3,000.14	2,343.61	162.43
AspenPlus Enthalpy (kJ/kg)[B]	-2,463.93	-2,452.26	-15,763.29	-97.58	-2,930.88	-12,513.34	-15,496.37	-14,994.25	-12,502.33	-12,930.48	-12,327.93	-12,980.15	-13,636.69	-15,817.87
Density (kg/m³)	0.8	0.9	1,002.5	1.2	1.1	881.2	979.6	1,003.7	69.2	19.2	12.3	2.1	0.1	993.3
V-L Molecular Weight	29.603	29.603	18.298	28.857	28.754	18.021	18.495	18.019	18.015	18.015	18.015	18.015	18.015	18.015
V-L Flowrate (lb_{mol}/hr)	181,933	181,933	25,007	7,616	203,123	428	1,435	5,920	230,850	192,992	192,992	166,313	126,055	166,777
V-L Flowrate (lb/hr)	5,385,842	5,385,842	457,582	219,773	5,840,630	7,716	26,535	106,666	4,158,834	3,476,806	3,476,806	2,996,169	2,270,910	3,004,537
Solids Flowrate (lb/hr)	0	0	4,125	0	0	69,406	404	45,662	0	0	0	0	0	0
Temperature (°F)	289	309	80	59	134	59	134	59	1,100	648	1,100	517	101	101
Pressure (psia)	14.2	15.3	14.7	14.7	14.8	14.7	14.7	14.7	3,514.7	710.8	696.6	75.0	1.0	190.7
Steam Table Enthalpy (Btu/lb)[A]	123.7	128.7	---	13.0	126.8	---	---	---	1,495.3	1,311.2	1,570.2	1,289.8	1,007.6	69.8
AspenPlus Enthalpy (Btu/lb)[B]	-1,059.3	-1,054.3	-6,777.0	-42.0	-1,260.1	-5,379.8	-6,662.2	-6,446.4	-5,375.0	-5,559.1	-5,300.1	-5,580.5	-5,862.7	-6,800.5
Density (lb/ft³)	0.052	0.055	62.582	0.076	0.067	55.009	61.156	62.658	4.319	1.197	0.768	0.131	0.003	62.010

[A]Steam table reference conditions are 32.02°F & 0.089 psia

[B]Aspen thermodynamic reference state is the component's constituent elements in an ideal gas state at 25°C and 1 atm

4.3.4 Case B12A – Performance Results

The plant produces a net output of 650 MWe at a net plant efficiency of 40.3 percent (HHV basis). Overall performance for the plant is summarized in Exhibit 4-50; Exhibit 4-51 provides a detailed breakdown of the auxiliary power requirements.

Exhibit 4-50. Case B12A plant performance summary

Performance Summary	
Total Gross Power, MWe	**685**
CO_2 Capture/Removal Auxiliaries, kWe	0
CO_2 Compression, kWe	0
Balance of Plant, kWe	35,070
Total Auxiliaries, MWe	**35**
Net Power, MWe	**650**
HHV Net Plant Efficiency, %	40.3%
HHV Net Plant Heat Rate, kJ/kWh (Btu/kWh)	8,939 (8,473)
LHV Net Plant Efficiency, %	41.8%
LHV Net Plant Heat Rate, kJ/kWh (Btu/kWh)	8,622 (8,172)
HHV Boiler Efficiency, %	88.1%
LHV Boiler Efficiency, %	91.3%
Steam Turbine Cycle Efficiency, %	48.2%
Steam Turbine Heat Rate, kJ/kWh (Btu/kWh)	7,471 (7,082)
Condenser Duty, GJ/hr (MMBtu/hr)	2,589 (2,454)
AGR Cooling Duty, GJ/hr (MMBtu/hr)	– (–)
As-Received Coal Feed, kg/hr (lb/hr)	214,112 (472,037)
Limestone Sorbent Feed, kg/hr (lb/hr)	20,712 (45,662)
HHV Thermal Input, kWt	1,613,879
LHV Thermal Input, kWt	1,556,606
Raw Water Withdrawal, $(m^3/min)/MW_{net}$ (gpm/MW_{net})	0.035 (9.3)
Raw Water Consumption, $(m^3/min)/MW_{net}$ (gpm/MW_{net})	0.028 (7.4)
Excess Air, %	20.3%

Exhibit 4-51. Case B12A plant power summary

Power Summary	
Steam Turbine Power, MWe	685
Total Gross Power, MWe	**685**
Auxiliary Load Summary	
Activated Carbon Injection, kWe	30
Ash Handling, kWe	690
Baghouse, kWe	90
Circulating Water Pumps, kWe	5,300
CO_2 Capture/Removal Auxiliaries, kWe	0
CO_2 Compression, kWe	0
Coal Handling and Conveying, kWe	470
Condensate Pumps, kWe	660
Cooling Tower Fans, kWe	2,740
Dry Sorbent Injection, kWe	60
Flue Gas Desulfurizer, kWe	3,310
Forced Draft Fans, kWe	2,010
Ground Water Pumps, kWe	550
Induced Draft Fans, kWe	8,210
Miscellaneous Balance of Plant[A,B], kWe	2,250
Primary Air Fans, kWe	1,570
Pulverizers, kWe	3,210
SCR, kWe	30
Sorbent Handling & Reagent Preparation, kWe	1,000
Spray Dryer Evaporator, kWe	240
Steam Turbine Auxiliaries, kWe	500
Transformer Losses, kWe	2,150
Total Auxiliaries, MWe	**35**
Net Power, MWe	**650**

[A]Boiler feed pumps are turbine driven
[B]Includes plant control systems, lighting, HVAC, and miscellaneous low voltage loads

4.3.4.1 Environmental Performance

The environmental targets for emissions of Hg, NOx, SO_2, and PM were presented in Section 2.4. A summary of the plant air emissions for Case B12A is presented in Exhibit 4-52.

Exhibit 4-52. Case B12A air emissions

	kg/GJ (lb/MMBtu)	Tonne/year (ton/year)[A]	kg/MWh (lb/MWh)[B]
SO_2	0.035 (0.081)	1,500 (1,653)	0.294 (0.648)
NOx	0.037 (0.087)	1,619 (1,785)	0.318 (0.700)
Particulate	0.005 (0.011)	208 (230)	0.041 (0.090)
Hg	1.60E-7 (3.73E-7)	0.007 (0.008)	1.36E-6 (3.00E-6)
CO_2	87 (202)	3,763,000 (4,147,997)	738 (1,627)
CO_2[C]	-	-	778 (1,714)
	mg/Nm^3		
Particulate Concentration[D,E]	15.1		

[A]Calculations based on an 85 percent capacity factor
[B]Emissions based on gross power except where otherwise noted
[C]CO_2 emissions based on net power instead of gross power
[D]Concentration of particles in the flue gas after the baghouse
[E]Normal conditions given at 32°F and 14.696 psia

SO_2 emissions are controlled using a wet limestone forced oxidation scrubber that achieves a removal efficiency of 98 percent. The byproduct calcium sulfate is dewatered and stored on site. The wallboard grade material can potentially be marketed and sold, but since it is highly dependent on local market conditions, no byproduct credit was taken. The saturated flue gas exiting the scrubber is vented through the plant stack.

NOx boiler emissions are controlled to about 0.15 kg/GJ (0.35 lb/MMBtu) using LNBs and OFA. An SCR unit then further reduces the NOx concentration by 75.1 percent to 0.04 kg/GJ (0.09 lb/MMBtu).

Particulate emissions are controlled using a pulse jet fabric filter, which operates at an efficiency of 99.9 percent.

The total reduction in mercury emission via the combined control equipment (SCR, ACI, fabric filter, DSI, and wet FGD) is 96.7 percent.

CO_2 emissions represent the uncontrolled discharge from the process.

The carbon balance for the plant is shown in Exhibit 4-53. The carbon input to the plant consists of carbon in the coal, carbon in the air, PAC, and carbon in the limestone reagent used in the FGD. Carbon in the air is not neglected here since the Aspen model accounts for air components throughout. Carbon leaves the plant mostly as CO_2 through the stack; however, the PAC is captured in the fabric filter, unburned carbon remains in the bottom ash, and some leaves as gypsum.

Exhibit 4-53. Case B12A carbon balance

Carbon In		Carbon Out	
	kg/hr (lb/hr)		kg/hr (lb/hr)
Coal	136,485 (300,899)	Stack Gas	137,924 (304,071)
Air (CO_2)	318 (701)	FGD Product	162 (357)
PAC	46 (102)	Baghouse	701 (1,546)
FGD Reagent	2,102 (4,633)	Bottom Ash	164 (361)
		CO_2 Product	0.0 (0.0)
		CO_2 Dryer Vent	0.0 (0.0)
		CO_2 Knockout	0.0 (0.0)
Total	**138,951 (306,335)**	**Total**	**138,951 (306,335)**

Exhibit 4-54 shows the sulfur balance for the plant. Sulfur input comes solely from the sulfur in the coal. Sulfur output includes the sulfur recovered from the FGD as gypsum, sulfur captured in the fabric filter via hydrated lime, and sulfur emitted in the stack gas.

Exhibit 4-54. Case B12A sulfur balance

Sulfur In		Sulfur Out	
	kg/hr (lb/hr)		kg/hr (lb/hr)
Coal	5,367 (11,831)	FGD Product	5,046 (11,124)
		Stack Gas	105 (231)
		Polishing Scrubber and Solvent Reclaiming	0.0 (0.0)
		Baghouse	216 (477)
Total	**5,367 (11,831)**	**Total**	**5,367 (11,831)**

Exhibit 4-55 shows the overall water balance for the plant.

Water demand represents the total amount of water required for a particular process. Some water is recovered within the process and is re-used as internal recycle. The difference between demand and recycle is raw water withdrawal. Raw water withdrawal is defined as the water removed from the ground or diverted from a POTW for use in the plant and was assumed to be provided 50 percent by a POTW and 50 percent from groundwater. Raw water withdrawal can be represented by the water metered from a raw water source and used in the plant processes for all purposes, such as FGD makeup, BFW makeup, and cooling tower makeup. The difference between water withdrawal and process water discharge is defined as water consumption and can be represented by the portion of the raw water withdrawn that is evaporated, transpired, incorporated into products or otherwise not returned to the water source from which it was withdrawn. Water consumption represents the net impact of the plant process on the water source balance.

Exhibit 4-55. Case B12A water balance

Water Use	Water Demand	Internal Recycle	Raw Water Withdrawal	Process Water Discharge	Raw Water Consumption
	m^3/min (gpm)	m^3/min (gpm)	m^3/min (gpm)	m^3/min (gpm)	m^3/min (gpm)
FGD Process Makeup	2.2 (587)	–	2.2 (587)	–	2.2 (587)
CO_2 Drying	–	–	–	–	–
CO_2 Capture Recovery	–	–	–	–	–
CO_2 Compression KO	–	–	–	–	–
Deaerator Vent	–	–	–	0.1 (17)	-0.1 (-17)
Condenser Makeup	**0.1 (17)**	**–**	**0.1 (17)**	**–**	**0.1 (17)**
BFW Makeup	0.1 (17)	–	0.1 (17)	–	0.1 (17)
Cooling Tower	**21 (5,450)**	**–**	**21 (5,450)**	**4.6 (1,226)**	**16 (4,225)**
BFW Blowdown	–	–	–	–	–
Total	**23 (6,054)**	**–**	**23 (6,054)**	**4.7 (1,242)**	**18 (4,811)**

4.3.4.2 Energy and Mass Balance Diagrams

An energy and mass balance diagram is shown for the Case B12A PC boiler, the FGD unit and steam cycle in Exhibit 4-56 and Exhibit 4-57.

An overall plant energy balance is provided in tabular form in Exhibit 4-58. The power out is the steam turbine power prior to generator losses. The power at the generator terminals (shown in Exhibit 4-50) is calculated by multiplying the power out by a generator efficiency of 98.5 percent.

Exhibit 4-56. Case B12A energy and mass balance, SC PC boiler without CO_2 capture

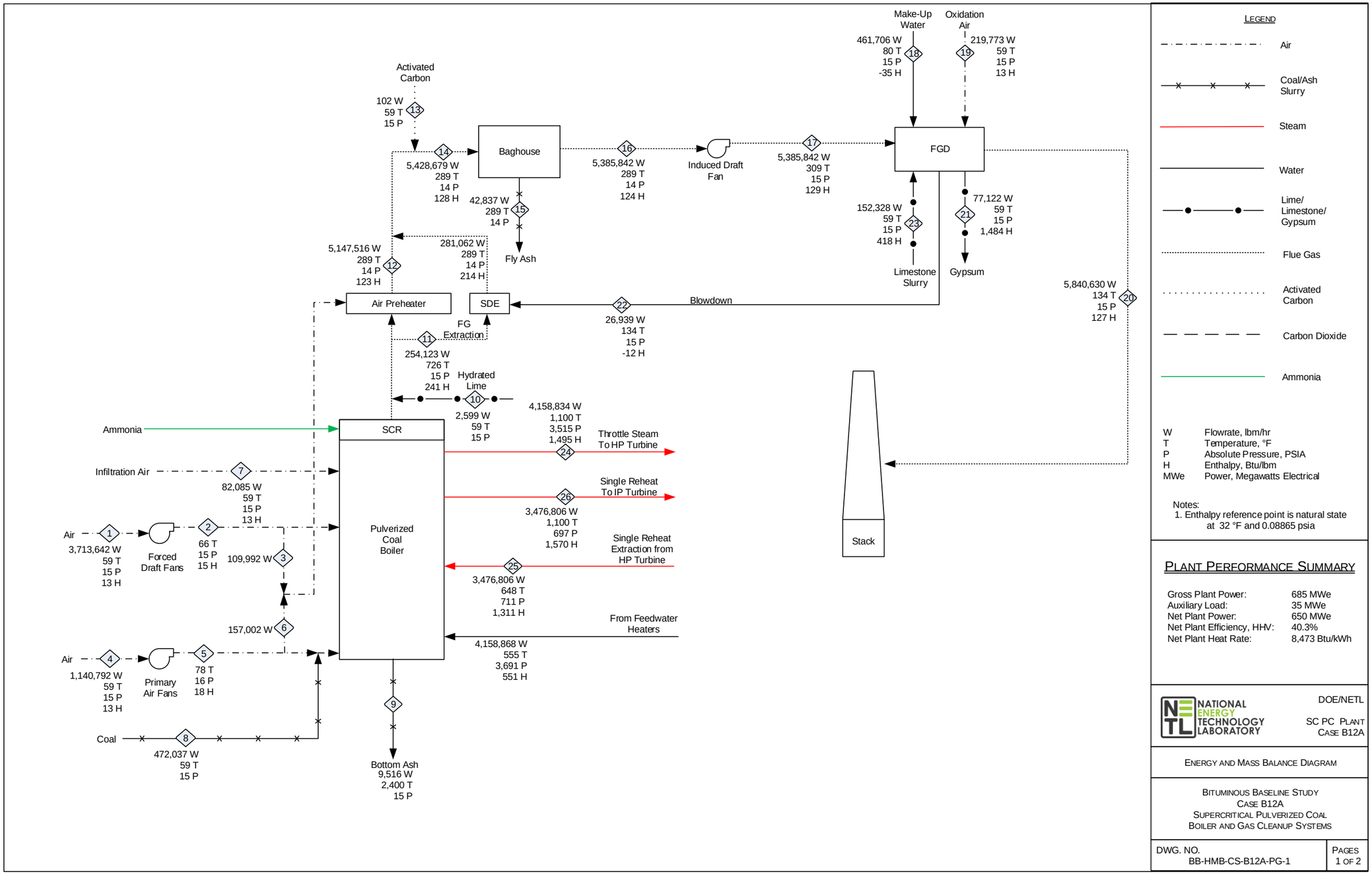

Exhibit 4-57. Case B12A energy and mass balance, SC steam cycle

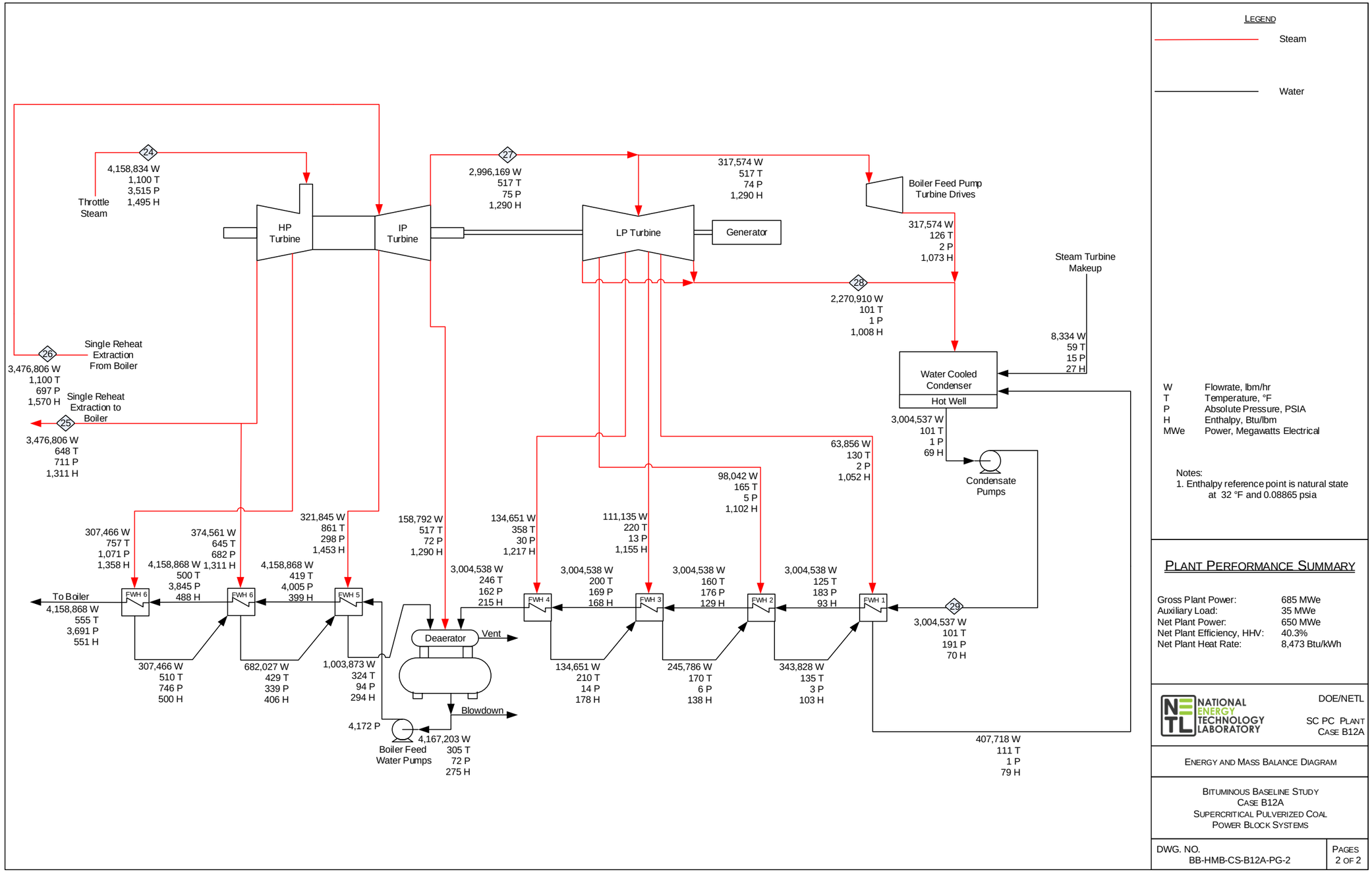

Exhibit 4-58. Case B12A overall energy balance (0°C [32°F] reference)

	HHV	Sensible + Latent	Power	Total
Heat In GJ/hr (MMBtu/hr)				
Coal	5,810 (5,507)	4.9 (4.6)	–	5,815 (5,511)
Air	–	68 (64)	–	68 (64)
Raw Water Makeup	–	86 (82)	–	86 (82)
Limestone	–	0.4 (0.4)	–	0.4 (0.4)
Auxiliary Power	–	–	126 (120)	126 (120)
TOTAL	**5,810 (5,507)**	**159 (151)**	**126 (120)**	**6,095 (5,777)**
Heat Out GJ/hr (MMBtu/hr)				
Bottom Ash	–	5.5 (5.2)	–	5.5 (5.2)
Fly Ash	–	2.0 (1.9)	–	2.0 (1.9)
Stack Gas	–	781 (741)	–	781 (741)
Sulfur	–	–	–	–
Gypsum	–	2.0 (1.9)	–	2.0 (1.9)
Motor Losses and Design Allowances	–	–	40 (38)	40 (38)
Cooling Tower Load[A]	–	2,694 (2,554)	–	2,694 (2,554)
CO_2 Product Stream	–	–	–	–
Blowdown Streams and Deaerator Vent	–	2.4 (2.3)	–	2.4 (2.3)
Ambient Losses[B]	–	137 (129)	–	137 (129)
Power	–	–	2,466 (2,337)	2,466 (2,337)
TOTAL	**0.0 (0.0)**	**3,624 (3,435)**	**2,506 (2,375)**	**6,130 (5,810)**
Unaccounted Energy[C]	–	–	–	*-35 (-33)*

[A]Includes condenser and miscellaneous cooling loads
[B]Ambient losses include all losses to the environment through radiation, convection, etc. Sources of these losses include the boiler, reheater, superheater, and transformers
[C]By difference

4.3.5 Case B12A – Major Equipment List

Major equipment items for the SC PC plant with no CO_2 capture are shown in the following tables. The accounts used in the equipment list correspond to the account numbers used in the cost estimates in Section 4.3.6. In general, the design conditions include a 10 percent contingency for flows and heat duties and a 21 percent contingency for heads on pumps and fans.

Case B12A – Account 1: Coal and Sorbent Handling

Equipment No.	Description	Type	Design Condition	Operating Qty.	Spares
1	Bottom Trestle Dumper and Receiving Hoppers	N/A	180 tonne (200 ton)	2	0
2	Feeder	Belt	570 tonne/hr (630 tph)	2	0
3	Conveyor No. 1	Belt	1,130 tonne/hr (1,250 tph)	1	0
4	Transfer Tower No. 1	Enclosed	N/A	1	0
5	Conveyor No. 2	Belt	1,130 tonne/hr (1,250 tph)	1	0
6	As-Received Coal Sampling System	Two-stage	N/A	1	0
7	Stacker/Reclaimer	Traveling, linear	1,130 tonne/hr (1,250 tph)	1	0
8	Reclaim Hopper	N/A	40 tonne (50 ton)	2	1
9	Feeder	Vibratory	180 tonne/hr (190 tph)	2	1
10	Conveyor No. 3	Belt w/ tripper	350 tonne/hr (390 tph)	1	0
11	Crusher Tower	N/A	N/A	1	0
12	Coal Surge Bin w/ Vent Filter	Dual outlet	180 tonne (190 ton)	2	0
13	Crusher	Impactor reduction	8 cm x 0 - 3 cm x 0 (3 in x 0 - 1-1/4 in x 0)	2	0
14	As-Fired Coal Sampling System	Swing hammer	N/A	1	1
15	Conveyor No. 4	Belt w/tripper	350 tonne/hr (390 tph)	1	0
16	Transfer Tower No. 2	Enclosed	N/A	1	0
17	Conveyor No. 5	Belt w/ tripper	350 tonne/hr (390 tph)	1	0
18	Coal Silo w/ Vent Filter and Slide Gates	Field erected	790 tonne (900 ton)	3	0
19	Activated Carbon Storage Silo and Feeder System	Shop assembled	Silo - 9 tonne (9 ton) Feeder - 50 kg/hr (110 lb/hr)	1	0
20	Hydrated Lime Storage Silo and Feeder System	Shop assembled	Silo - 220 tonne (240 ton) Feeder - 1,300 kg/hr (2,860 lb/hr)	1	0
21	Limestone Truck Unloading Hopper	N/A	30 tonne (40 ton)	1	0
22	Limestone Feeder	Belt	87 tonne/hr (96 tph)	1	0
23	Limestone Conveyor No. 1	Belt	87 tonne/hr (96 tph)	1	0
24	Limestone Reclaim Hopper	N/A	17 tonne (19 ton)	1	0
25	Limestone Reclaim Feeder	Belt	68 tonne/hr (75 tph)	1	0
26	Limestone Conveyor No. 2	Belt	68 tonne/hr (75 tph)	1	0
27	Limestone Day Bin	w/ actuator	273 tonne (301 ton)	2	0

Case B12A – Account 2: Coal and Sorbent Preparation and Feed

Equipment No.	Description	Type	Design Condition	Operating Qty.	Spares
1	Coal Feeder	Gravimetric	39 tonne/hr (43 tph)	6	0
2	Coal Pulverizer	Ball type or equivalent	39 tonne/hr (43 tph)	6	0
3	Limestone Weigh Feeder	Gravimetric	23 tonne/hr (25 tph)	1	1
4	Limestone Ball Mill	Rotary	23 tonne/hr (25 tph)	1	1
5	Limestone Mill Slurry Tank with Agitator	N/A	88,600 liters (23,000 gal)	1	1
6	Limestone Mill Recycle Pumps	Horizontal centrifugal	1,460 lpm @ 10m H_2O (390 gpm @ 40 ft H_2O)	1	1
7	Hydroclone Classifier	4 active cyclones in a 5-cyclone bank	370 lpm (100 gpm) per cyclone	1	1
8	Distribution Box	2-way	N/A	1	1
9	Limestone Slurry Storage Tank with Agitator	Field erected	493,000 liters (130,000 gal)	1	1
10	Limestone Slurry Feed Pumps	Horizontal centrifugal	1,030 lpm @ 9m H_2O (270 gpm @ 30 ft H_2O)	1	1

Case B12A – Account 3: Feedwater and Miscellaneous Balance of Plant Systems

Equipment No.	Description	Type	Design Condition	Operating Qty.	Spares
1	Demineralized Water Storage Tank	Vertical, cylindrical, outdoor	250,000 liters (66,000 gal)	2	0
2	Condensate Pumps	Vertical canned	25,200 lpm @ 200 m H_2O (6,600 gpm @ 500 ft H_2O)	1	1
3	Deaerator and Storage Tank	Horizontal spray type	2,079,000 kg/hr (4,584,000 lb/hr), 5 min. tank	1	0
4	Boiler Feed Pump/Turbine	Barrel type, multi-stage, centrifugal	34,800 lpm @ 3,500 m H_2O (9,200 gpm @ 11,400 ft H_2O)	1	1
5	Startup Boiler Feed Pump, Electric Motor Driven	Barrel type, multi-stage, centrifugal	10,400 lpm @ 3,500 m H_2O (2,700 gpm @ 11,400 ft H_2O)	1	0
6	LP Feedwater Heater 1A/1B	Horizontal U-tube	750,000 kg/hr (1,650,000 lb/hr)	2	0
7	LP Feedwater Heater 2A/2B	Horizontal U-tube	750,000 kg/hr (1,650,000 lb/hr)	2	0
8	LP Feedwater Heater 3A/3B	Horizontal U-tube	750,000 kg/hr (1,650,000 lb/hr)	2	0
9	LP Feedwater Heater 4A/4B	Horizontal U-tube	750,000 kg/hr (1,650,000 lb/hr)	2	0
10	HP Feedwater Heater 6	Horizontal U-tube	2,080,000 kg/hr (4,570,000 lb/hr)	1	0
11	HP Feedwater Heater 7	Horizontal U-tube	2,080,000 kg/hr (4,570,000 lb/hr)	1	0
12	HP Feedwater heater 8	Horizontal U-tube	2,080,000 kg/hr (4,570,000 lb/hr)	1	0
13	Auxiliary Boiler	Shop fabricated, water tube	20,000 kg/hr, 2.8 MPa, 343°C (40,000 lb/hr, 400 psig, 650°F)	1	0
14	Gas Pipeline	Underground, coated carbon steel, wrapped cathodic protection	N/A - For Start-up Only	1	0
15	Service Air Compressors	Flooded Screw	28 m^3/min @ 0.7 MPa (1,000 scfm @ 100 psig)	2	1
16	Instrument Air Dryers	Duplex, regenerative	28 m^3/min (1,000 scfm)	2	1
17	Closed Cycle Cooling Heat Exchangers	Shell and tube	53 GJ/hr (50 MMBtu/hr) each	2	0
18	Closed Cycle Cooling Water Pumps	Horizontal centrifugal	20,800 lpm @ 30 m H_2O (5,500 gpm @ 100 ft H_2O)	2	1
19	Engine-Driven Fire Pump	Vertical turbine, diesel engine	3,785 lpm @ 88 m H_2O (1,000 gpm @ 290 ft H_2O)	1	1
20	Fire Service Booster Pump	Two-stage horizontal centrifugal	2,650 lpm @ 64 m H_2O (700 gpm @ 210 ft H_2O)	1	1
21	Raw Water Pumps	Stainless steel, single suction	6,120 lpm @ 20 m H_2O (1,620 gpm @ 60 ft H_2O)	2	1
22	Ground Water Pumps	Stainless steel, single suction	2,450 lpm @ 270 m H_2O (650 gpm @ 880 ft H_2O)	5	1
23	Filtered Water Pumps	Stainless steel, single suction	940 lpm @ 50 m H_2O (250 gpm @ 160 ft H_2O)	2	1
24	Filtered Water Tank	Vertical, cylindrical	899,000 liter (238,000 gal)	1	0
25	Makeup Water Demineralizer	Multi-media filter, cartridge filter, RO membrane assembly, electrodeionization unit	330 lpm (90 gpm)	1	1

Equipment No.	Description	Type	Design Condition	Operating Qty.	Spares
26	Liquid Waste Treatment System	–	10 years, 24-hour storm	1	0
27	Process Water Treatment	Spray dryer evaporator	Flue Gas - 1,940 m^3/min (68,360 acfm) @ 385°C (726°F) & 0.1 MPa (15 psia) Blowdown - 110 lpm (30 gpm) @ 20,020 ppmw Cl^-	2	1

Case B12A – Account 4: Pulverized Coal Boiler and Accessories

Equipment No.	Description	Type	Design Condition	Operating Qty.	Spares
1	Boiler	SC, drum, wall-fired, low NOx burners, overfire air	2,080,000 kg/hr steam @ 24.1 MPa/593°C/593°C (4,570,000 lb/hr steam @ 3,500 psig/1,100°F/1,100°F)	1	0
2	Primary Air Fan	Centrifugal	285,000 kg/hr, 3,900 m^3/min @ 123 cm WG (627,000 lb/hr, 137,100 acfm @ 48 in. WG)	2	0
3	Forced Draft Fan	Centrifugal	926,000 kg/hr, 12,600 m^3/min @ 47 cm WG (2,043,000 lb/hr, 446,500 acfm @ 19 in. WG)	2	0
4	Induced Draft Fan	Centrifugal	1,344,000 kg/hr, 26,700 m^3/min @ 93 cm WG (2,962,000 lb/hr, 944,600 acfm @ 36 in. WG)	2	0
5	SCR Reactor Vessel	Space for spare layer	2,540,000 kg/hr (5,600,000 lb/hr)	2	0
6	SCR Catalyst	–	–	3	0
7	Dilution Air Blower	Centrifugal	90 m^3/min @ 108 cm WG (3,300 acfm @ 42 in. WG)	2	1
8	Ammonia Storage	Horizontal tank	103,000 liter (27,000 gal)	5	0
9	Ammonia Feed Pump	Centrifugal	20 lpm @ 90 m H_2O (5 gpm @ 300 ft H_2O)	2	1

Case B12A – Account 5: Flue Gas Cleanup

Equipment No.	Description	Type	Design Condition	Operating Qty.	Spares
1	Fabric Filter	Single stage, high-ratio with pulse-jet online cleaning system	1,344,000 kg/hr (2,963,000 lb/hr) 99.9% efficiency	2	0
2	Absorber Module	Counter-current open spray	45,000 m^3/min (1,605,000 acfm)	1	0
3	Recirculation Pumps	Horizontal centrifugal	158,000 lpm @ 65 m H_2O (42,000 gpm @ 210 ft H_2O)	5	1
4	Bleed Pumps	Horizontal centrifugal	4,370 lpm (1,160 gpm) at 20 wt% solids	2	1
5	Oxidation Air Blowers	Centrifugal	750 m^3/min @ 0.3 MPa (26,420 acfm @ 37 psia)	2	1
6	Agitators	Side entering	50 hp	5	1
7	Dewatering Cyclones	Radial assembly, 5 units each	1,100 lpm (290 gpm) per cyclone	2	0

Equipment No.	Description	Type	Design Condition	Operating Qty.	Spares
8	Vacuum Filter Belt	Horizontal belt	35 tonne/hr (38 tph) of 50 wt% slurry	2	1
9	Filtrate Water Return Pumps	Horizontal centrifugal	670 lpm @ 13 m H_2O (180 gpm @ 40 ft H_2O)	1	1
10	Filtrate Water Return Storage Tank	Vertical, lined	440,000 lpm (120,000 gal)	1	0
11	Process Makeup Water Pumps	Horizontal centrifugal	1,560 lpm @ 21 m H_2O (410 gpm @ 70 ft H_2O)	1	1
12	Activated Carbon Injectors	---	50 kg/hr (110 lb/hr)	1	0
13	Hydrated Lime Injectors	---	1,300 kg/hr (2,860 lb/hr)	1	0

Case B12A – Account 7: Ductwork and Stack

Equipment No.	Description	Type	Design Condition	Operating Qty.	Spares
1	Stack	Reinforced concrete with FRP liner	152 m (500 ft) high x 6.3 m (21 ft) diameter	1	0

Case B12A – Account 8: Steam Turbine and Accessories

Equipment No.	Description	Type	Design Condition	Operating Qty.	Spares
1	Steam Turbine	Commercially available advanced steam turbine	710 MW 24.1 MPa/593°C/593°C (3500 psig/ 1100°F/1100°F)	1	0
2	Steam Turbine Generator	Hydrogen cooled, static excitation	790 MVA @ 0.9 p.f., 24 kV, 60 Hz, 3-phase	1	0
3	Surface Condenser	Single pass, divided waterbox including vacuum pumps	1,420 GJ/hr (2,700 MMBtu/hr), Inlet water temperature 16°C (60°F), Water temperature rise 11°C (20°F)	1	0

Case B12A – Account 9: Cooling Water System

Equipment No.	Description	Type	Design Condition	Operating Qty.	Spares
1	Circulating Water Pumps	Vertical, wet pit	532,000 lpm @ 30 m (140,000 gpm @ 100 ft)	2	1
2	Cooling Tower	Evaporative, mechanical draft, multi-cell	11°C (51.5°F) wet bulb/16°C (60°F) CWT/ 27°C (80°F) HWT/ 2960 GJ/hr (2810 MMBtu/hr) heat duty	1	0

Case B12A – Account 10: Ash and Spent Sorbent Handling System

Equipment No.	Description	Type	Design Condition	Operating Qty.	Spares
1	Economizer Hopper (part of boiler scope of supply)	–	–	4	0
2	Bottom Ash Hopper (part of boiler scope of supply)	–	–	2	0
3	Clinker Grinder	–	4.7 tonne/hr (5.2 tph)	1	1
4	Pyrites Hopper (part of pulverizer scope of supply included with boiler)	–	–	6	0
5	Pyrites Transfer Tank	–	–	1	0
6	Pyrite Reject Water Pump	–	–	1	0
7	Pneumatic Transport Line	Fully-dry, isolatable	–	4	0

Equipment No.	Description	Type	Design Condition	Operating Qty.	Spares
8	Bottom Ash Storage Silo	–	–	1	1
9	Baghouse Hopper (part of baghouse scope of supply)	–	–	24	0
10	Air Heater Hopper (part of boiler scope of supply)	–	–	10	0
11	Air Blower	–	19 m^3/min @ 0.2 MPa (678 scfm @ 24 psi)	1	1
12	Fly Ash Silo	Reinforced concrete	1,260 tonne (1,390 ton)	2	0
13	Slide Gate Valves	–	–	2	0
14	Unloader	–	–	1	0
15	Telescoping Unloading Chute	–	120 tonne/hr (130 tph)	1	0

Case B12A – Account 11: Accessory Electric Plant

Equipment No.	Description	Type	Design Condition	Operating Qty.	Spares
1	STG Transformer	Oil-filled	24 kV/345 kV, 750 MVA, 3-ph, 60 Hz	1	0
2	High Voltage Transformer	Oil-filled	345 kV/13.8 kV, 0 MVA, 3-ph, 60 Hz	2	0
3	Medium Voltage Transformer	Oil-filled	24 kV/4.16 kV, 31 MVA, 3-ph, 60 Hz	1	1
4	Low Voltage Transformer	Dry ventilated	4.16 kV/480 V, 5 MVA, 3-ph, 60 Hz	1	1
5	STG Isolated Phase Bus Duct and Tap Bus	Aluminum, self-cooled	24 kV, 3-ph, 60 Hz	1	0
6	Medium Voltage Switchgear	Metal clad	4.16 kV, 3-ph, 60 Hz	1	1
7	Low Voltage Switchgear	Metal enclosed	480 V, 3-ph, 60 Hz	1	1
8	Emergency Diesel Generator	Sized for emergency shutdown	750 kW, 480 V, 3-ph, 60 Hz	1	0

Case B12A – Account 12: Instrumentation and Control

Equipment No.	Description	Type	Design Condition	Operating Qty.	Spares
1	DCS - Main Control	Monitor/keyboard; Operator printer (laser color); Engineering printer (laser B&W)	Operator stations/printers and engineering stations/printers	1	0
2	DCS - Processor	Microprocessor with redundant input/output	N/A	1	0
3	DCS - Data Highway	Fiber optic	Fully redundant, 25% spare	1	0

4.3.6 Case B12A – Cost Estimating

The cost estimating methodology was described previously in Section 2.7. Exhibit 4-59 shows a detailed breakdown of the capital costs; Exhibit 4-60 shows the owner's costs, TOC, and TASC; Exhibit 4-61 shows the initial and annual O&M costs; and Exhibit 4-62 shows the LCOE breakdown.

The estimated TPC of the SC PC boiler with no CO_2 capture is $2,099/kW. No process contingency was included in this case because all elements of the technology are commercially proven. The project contingency is 13.4 percent of the TPC. The LCOE is $64.4/MWh.

Exhibit 4-59. Case B12A total plant cost details

	Case:	B12A	– SC PC w/o CO_2				Estimate Type:			Conceptual	
	Plant Size (MW, net):	650					Cost Base:			Dec 2018	
Item No.	Description	Equipment Cost	Material Cost	Labor		Bare Erected Cost	Eng'g CM H.O.& Fee	Contingencies		Total Plant Cost	
				Direct	Indirect			Process	Project	$/1,000	$/kW
1						Coal & Sorbent Handling					
1.1	Coal Receive & Unload	$1,011	$0	$455	$0	$1,466	$257	$0	$258	$1,981	$3
1.2	Coal Stackout & Reclaim	$3,318	$0	$742	$0	$4,060	$710	$0	$716	$5,486	$8
1.3	Coal Conveyors	$30,567	$0	$7,266	$0	$37,833	$6,621	$0	$6,668	$51,122	$79
1.4	Other Coal Handling	$4,250	$0	$893	$0	$5,143	$900	$0	$906	$6,949	$11
1.5	Sorbent Receive & Unload	$193	$0	$57	$0	$250	$44	$0	$44	$337	$1
1.6	Sorbent Stackout & Reclaim	$1,414	$0	$255	$0	$1,670	$292	$0	$294	$2,256	$3
1.7	Sorbent Conveyors	$2,141	$464	$518	$0	$3,123	$547	$0	$550	$4,220	$6
1.8	Other Sorbent Handling	$103	$24	$53	$0	$181	$32	$0	$32	$244	$0
1.9	Coal & Sorbent Handling Foundations	$0	$1,325	$1,747	$0	$3,072	$538	$0	$541	$4,151	$6
	Subtotal	**$42,997**	**$1,813**	**$11,986**	**$0**	**$56,797**	**$9,939**	**$0**	**$10,010**	**$76,747**	**$118**
2						Coal & Sorbent Preparation & Feed					
2.1	Coal Crushing & Drying	$2,151	$0	$413	$0	$2,564	$449	$0	$452	$3,464	$5
2.2	Prepared Coal Storage & Feed	$7,238	$0	$1,558	$0	$8,796	$1,539	$0	$1,550	$11,885	$18
2.5	Sorbent Preparation Equipment	$949	$41	$194	$0	$1,185	$207	$0	$209	$1,601	$2
2.6	Sorbent Storage & Feed	$1,590	$0	$601	$0	$2,191	$383	$0	$386	$2,961	$5
2.9	Coal & Sorbent Feed Foundation	$0	$631	$554	$0	$1,185	$207	$0	$209	$1,602	$2
	Subtotal	**$11,928**	**$672**	**$3,321**	**$0**	**$15,921**	**$2,786**	**$0**	**$2,806**	**$21,513**	**$33**
3						Feedwater & Miscellaneous BOP Systems					
3.1	Feedwater System	$3,363	$5,765	$2,883	$0	$12,011	$2,102	$0	$2,117	$16,229	$25
3.2	Water Makeup & Pretreating	$5,763	$576	$3,266	$0	$9,605	$1,681	$0	$2,257	$13,543	$21
3.3	Other Feedwater Subsystems	$2,503	$821	$780	$0	$4,104	$718	$0	$723	$5,545	$9
3.4	Service Water Systems	$1,762	$3,363	$10,890	$0	$16,015	$2,803	$0	$3,764	$22,581	$35
3.5	Other Boiler Plant Systems	$617	$224	$561	$0	$1,403	$245	$0	$247	$1,895	$3
3.6	Natural Gas Pipeline and Start-Up System	$2,969	$128	$96	$0	$3,193	$559	$0	$563	$4,314	$7
3.7	Waste Water Treatment Equipment	$8,140	$0	$4,989	$0	$13,130	$2,298	$0	$3,085	$18,513	$28
3.8	Spray Dryer Evaporator	$13,925	$0	$8,064	$0	$21,989	$3,848	$0	$5,167	$31,004	$48
3.9	Miscellaneous Plant Equipment	$212	$28	$108	$0	$348	$61	$0	$82	$491	$1
	Subtotal	**$39,255**	**$10,905**	**$31,636**	**$0**	**$81,796**	**$14,314**	**$0**	**$18,005**	**$114,116**	**$176**
4						Pulverized Coal Boiler & Accessories					
4.9	Pulverized Coal Boiler & Accessories	$222,878	$0	$126,995	$0	$349,872	$61,228	$0	$61,665	$472,765	$727
4.10	Selective Catalytic Reduction System	$24,777	$0	$14,118	$0	$38,895	$6,807	$0	$6,855	$52,557	$81
4.11	Boiler Balance of Plant	$1,493	$0	$851	$0	$2,343	$410	$0	$413	$3,167	$5
4.12	Primary Air System	$1,433	$0	$816	$0	$2,249	$394	$0	$396	$3,039	$5
4.13	Secondary Air System	$2,170	$0	$1,237	$0	$3,407	$596	$0	$600	$4,604	$7
4.14	Induced Draft Fans	$4,626	$0	$2,636	$0	$7,262	$1,271	$0	$1,280	$9,813	$15

Case:		B12A	– SC PC w/o CO_2				Estimate Type:			Conceptual	
Plant Size (MW, net):		650					Cost Base:			Dec 2018	
Item No.	Description	Equipment Cost	Material Cost	Labor Direct	Labor Indirect	Bare Erected Cost	Eng'g CM H.O.& Fee	Contingencies Process	Contingencies Project	Total Plant Cost $/1,000	Total Plant Cost $/kW
4.15	Major Component Rigging	$79	$0	$45	$0	$123	$22	$0	$22	$167	$0
4.16	Boiler Foundations	$0	$337	$296	$0	$634	$111	$0	$112	$856	$1
	Subtotal	**$257,456**	**$337**	**$146,993**	**$0**	**$404,786**	**$70,838**	**$0**	**$71,344**	**$546,968**	**$842**
5						Flue Gas Cleanup					
5.2	WFGD Absorber Vessels & Accessories	$66,382	$0	$14,193	$0	$80,575	$14,101	$0	$14,201	$108,877	$168
5.3	Other FGD	$298	$0	$335	$0	$633	$111	$0	$112	$855	$1
5.6	Mercury Removal (Dry Sorbent Injection/Activated Carbon Injection)	$2,175	$478	$2,138	$0	$4,791	$838	$0	$844	$6,473	$10
5.9	Particulate Removal (Bag House & Accessories)	$1,254	$0	$790	$0	$2,044	$358	$0	$360	$2,762	$4
5.12	Gas Cleanup Foundations	$0	$163	$143	$0	$306	$53	$0	$54	$413	$1
5.13	Gypsum Dewatering System	$663	$0	$112	$0	$774	$136	$0	$136	$1,046	$2
	Subtotal	**$70,771**	**$641**	**$17,711**	**$0**	**$89,123**	**$15,597**	**$0**	**$15,708**	**$120,427**	**$185**
7						Ductwork & Stack					
7.3	Ductwork	$0	$695	$483	$0	$1,179	$206	$0	$208	$1,593	$2
7.4	Stack	$8,822	$0	$5,126	$0	$13,948	$2,441	$0	$2,458	$18,848	$29
7.5	Duct & Stack Foundations	$0	$207	$246	$0	$453	$79	$0	$106	$638	$1
	Subtotal	**$8,822**	**$902**	**$5,855**	**$0**	**$15,580**	**$2,726**	**$0**	**$2,773**	**$21,079**	**$32**
8						Steam Turbine & Accessories					
8.1	Steam Turbine Generator & Accessories	$67,758	$0	$7,389	$0	$75,147	$13,151	$0	$13,245	$101,542	$156
8.2	Steam Turbine Plant Auxiliaries	$1,534	$0	$3,266	$0	$4,801	$840	$0	$846	$6,487	$10
8.3	Condenser & Auxiliaries	$13,886	$0	$4,711	$0	$18,597	$3,254	$0	$3,278	$25,129	$39
8.4	Steam Piping	$36,326	$0	$14,724	$0	$51,050	$8,934	$0	$8,998	$68,981	$106
8.5	Turbine Generator Foundations	$0	$240	$395	$0	$635	$111	$0	$149	$895	$1
	Subtotal	**$119,504**	**$240**	**$30,485**	**$0**	**$150,229**	**$26,290**	**$0**	**$26,515**	**$203,034**	**$312**
9						Cooling Water System					
9.1	Cooling Towers	$12,939	$0	$4,001	$0	$16,940	$2,965	$0	$2,986	$22,890	$35
9.2	Circulating Water Pumps	$1,726	$0	$108	$0	$1,834	$321	$0	$323	$2,478	$4
9.3	Circulating Water System Auxiliaries	$11,459	$0	$1,525	$0	$12,984	$2,272	$0	$2,288	$17,544	$27
9.4	Circulating Water Piping	$0	$5,302	$4,802	$0	$10,104	$1,768	$0	$1,781	$13,653	$21
9.5	Make-up Water System	$1,006	$0	$1,292	$0	$2,298	$402	$0	$405	$3,105	$5
9.6	Component Cooling Water System	$826	$0	$634	$0	$1,460	$256	$0	$257	$1,973	$3
9.7	Circulating Water System Foundations	$0	$508	$844	$0	$1,351	$237	$0	$318	$1,906	$3
	Subtotal	**$27,955**	**$5,810**	**$13,206**	**$0**	**$46,971**	**$8,220**	**$0**	**$8,358**	**$63,549**	**$98**
10						Ash & Spent Sorbent Handling Systems					
10.6	Ash Storage Silos	$1,021	$0	$3,125	$0	$4,146	$726	$0	$731	$5,602	$9
10.7	Ash Transport & Feed Equipment	$3,475	$0	$3,444	$0	$6,919	$1,211	$0	$1,219	$9,349	$14
10.9	Ash/Spent Sorbent Foundation	$0	$712	$873	$0	$1,585	$277	$0	$372	$2,235	$3
	Subtotal	**$4,495**	**$712**	**$7,443**	**$0**	**$12,650**	**$2,214**	**$0**	**$2,323**	**$17,186**	**$26**

Case:	B12A	– SC PC w/o CO_2					Estimate Type:			Conceptual	
Plant Size (MW, net):	650						Cost Base:			Dec 2018	
Item No.	Description	Equipment Cost	Material Cost	Labor Direct	Labor Indirect	Bare Erected Cost	Eng'g CM H.O.& Fee	Contingencies Process	Contingencies Project	Total Plant Cost $/1,000	Total Plant Cost $/kW
11						Accessory Electric Plant					
11.1	Generator Equipment	$2,500	$0	$1,886	$0	$4,385	$767	$0	$773	$5,926	$9
11.2	Station Service Equipment	$4,546	$0	$390	$0	$4,936	$864	$0	$870	$6,670	$10
11.3	Switchgear & Motor Control	$7,058	$0	$1,225	$0	$8,282	$1,449	$0	$1,460	$11,191	$17
11.4	Conduit & Cable Tray	$0	$917	$2,644	$0	$3,562	$623	$0	$628	$4,812	$7
11.5	Wire & Cable	$0	$2,430	$4,343	$0	$6,773	$1,185	$0	$1,194	$9,152	$14
11.6	Protective Equipment	$55	$0	$191	$0	$246	$43	$0	$43	$332	$1
11.7	Standby Equipment	$783	$0	$723	$0	$1,506	$264	$0	$265	$2,035	$3
11.8	Main Power Transformers	$6,461	$0	$132	$0	$6,593	$1,154	$0	$1,162	$8,908	$14
11.9	Electrical Foundations	$0	$206	$523	$0	$728	$127	$0	$171	$1,027	$2
	Subtotal	**$21,403**	**$3,553**	**$12,056**	**$0**	**$37,012**	**$6,477**	**$0**	**$6,566**	**$50,055**	**$77**
12						Instrumentation & Control					
12.1	Pulverized Coal Boiler Control Equipment	$690	$0	$123	$0	$813	$142	$0	$143	$1,098	$2
12.3	Steam Turbine Control Equipment	$619	$0	$68	$0	$687	$120	$0	$121	$928	$1
12.5	Signal Processing Equipment	$783	$0	$140	$0	$923	$161	$0	$163	$1,247	$2
12.6	Control Boards, Panels & Racks	$240	$0	$146	$0	$386	$68	$0	$68	$521	$1
12.7	Distributed Control System Equipment	$6,757	$0	$1,205	$0	$7,962	$1,393	$0	$1,403	$10,759	$17
12.8	Instrument Wiring & Tubing	$473	$379	$1,514	$0	$2,366	$414	$0	$417	$3,197	$5
12.9	Other Instrumentation & Controls Equipment	$582	$0	$1,347	$0	$1,929	$338	$0	$340	$2,607	$4
	Subtotal	**$10,144**	**$379**	**$4,542**	**$0**	**$15,065**	**$2,636**	**$0**	**$2,655**	**$20,356**	**$31**
13						Improvements to Site					
13.1	Site Preparation	$0	$419	$8,926	$0	$9,345	$1,635	$0	$2,196	$13,176	$20
13.2	Site Improvements	$0	$2,079	$2,746	$0	$4,825	$844	$0	$1,134	$6,803	$10
13.3	Site Facilities	$2,375	$0	$2,492	$0	$4,867	$852	$0	$1,144	$6,862	$11
	Subtotal	**$2,375**	**$2,498**	**$14,164**	**$0**	**$19,036**	**$3,331**	**$0**	**$4,474**	**$26,841**	**$41**
14						Buildings & Structures					
14.2	Boiler Building	$0	$11,588	$10,184	$0	$21,772	$3,810	$0	$3,837	$29,419	$45
14.3	Steam Turbine Building	$0	$16,107	$15,002	$0	$31,109	$5,444	$0	$5,483	$42,036	$65
14.4	Administration Building	$0	$1,046	$1,106	$0	$2,152	$377	$0	$379	$2,909	$4
14.5	Circulation Water Pumphouse	$0	$134	$106	$0	$240	$42	$0	$42	$324	$0
14.6	Water Treatment Buildings	$0	$372	$339	$0	$712	$125	$0	$125	$961	$1
14.7	Machine Shop	$0	$552	$370	$0	$922	$161	$0	$163	$1,246	$2
14.8	Warehouse	$0	$415	$416	$0	$831	$145	$0	$146	$1,123	$2
14.9	Other Buildings & Structures	$0	$291	$247	$0	$538	$94	$0	$95	$727	$1
14.10	Waste Treating Building & Structures	$0	$627	$1,901	$0	$2,528	$442	$0	$446	$3,416	$5
	Subtotal	**$0**	**$31,133**	**$29,671**	**$0**	**$60,804**	**$10,641**	**$0**	**$10,717**	**$82,162**	**$126**
	Total	**$617,105**	**$59,594**	**$329,070**	**$0**	**$1,005,770**	**$176,010**	**$0**	**$182,253**	**$1,364,033**	**$2,099**

Exhibit 4-60. Case B12A owner's costs

Description	$/1,000	$/kW
Pre-Production Costs		
6 Months All Labor	$9,292	$14
1 Month Maintenance Materials	$1,284	$2
1 Month Non-Fuel Consumables	$1,653	$3
1 Month Waste Disposal	$727	$1
25% of 1 Months Fuel Cost at 100% CF	$2,238	$3
2% of TPC	$27,281	$42
Total	**$42,475**	**$65**
Inventory Capital		
60-day supply of fuel and consumables at 100% CF	$20,706	$32
0.5% of TPC (spare parts)	$6,820	$10
Total	**$27,527**	**$42**
Other Costs		
Initial Cost for Catalyst and Chemicals	$2,044	$3
Land	$900	$1
Other Owner's Costs	$204,605	$315
Financing Costs	$36,829	$57
Total Overnight Costs (TOC)	**$1,678,412**	**$2,582**
TASC Multiplier (IOU, 35 year)	1.154	
Total As-Spent Cost (TASC)	**$1,937,579**	**$2,981**

Exhibit 4-61. Case B12A initial and annual operating and maintenance costs

Case:	B12A	– SC PC w/o CO_2			Cost Base:	Dec 2018
Plant Size (MW, net):	650	Heat Rate-net (Btu/kWh):		8,473	Capacity Factor (%):	85
Operating & Maintenance Labor						
Operating Labor				**Operating Labor Requirements per Shift**		
Operating Labor Rate (base):		38.50	**$/hour**	Skilled Operator:		2.0
Operating Labor Burden:		30.00	**% of base**	Operator:		9.0
Labor O-H Charge Rate:		25.00	**% of labor**	Foreman:		1.0
				Lab Techs, etc.:		2.0
				Total:		**14.0**
Fixed Operating Costs						
					Annual Cost	
					($)	**($/kW-net)**
Annual Operating Labor:					$6,138,132	$9.444
Maintenance Labor:					$8,729,809	$13.432
Administrative & Support Labor:					$3,716,985	$5.719
Property Taxes and Insurance:					$27,280,654	$41.975
Total:					**$45,865,581**	**$70.570**
Variable Operating Costs						
					($)	**($/MWh-net)**
Maintenance Material:					$13,094,714	$2.70587
Consumables						
	Initial Fill	**Per Day**	**Per Unit**	**Initial Fill**		
Water (/1000 gallons):	0	4,359	$1.90	$0	$2,569,326	$0.53092
Makeup and Waste Water Treatment Chemicals (lbs):	0	13.0	$550.00	$0	$2,215,533	$0.45781
Brominated Activated Carbon (ton):	0	1.22	$1,600.00	$0	$604,623	$0.12494
Enhanced Hydrated Lime (ton):	0	31.2	$240.00	$0	$2,321,985	$0.47981
Limestone (ton):	0	548	$22.00	$0	$3,739,990	$0.77282
Ammonia (19 wt%, ton):	0	51.9	$300.00	$0	$4,830,710	$0.99821
SCR Catalyst (ft^3):	13,626	12.4	150.00	$2,043,971	$579,125	$0.11967
Subtotal:				**$2,043,971**	**$16,861,292**	**$3.48419**
Waste Disposal						
Fly Ash (ton)	0	514	$38.00	$0	$6,060,275	$1.25228
Bottom Ash (ton)	0	114	$38.00	$0	$1,346,208	$0.27818
SCR Catalyst (ft^3):	0	12.4	$2.50	$0	$9,652	$0.00199
Subtotal:				**$0**	**$7,416,134**	**$1.53246**
By-Products						
Gypsum (ton)	0	833	$0.00	$0	$0	$0.00000
Subtotal:				**$0**	**$0**	**$0.00000**
Variable Operating Costs Total:				**$2,043,971**	**$37,372,141**	**$7.72251**
Fuel Cost						
Illinois Number 6 (ton):	0	5,664	$51.96	$0	$91,310,727	$18.86827
Total:				**$0**	**$91,310,727**	**$18.86827**

Exhibit 4-62. Case B12A LCOE breakdown

Component	Value, $/MWh	Percentage
Capital	28.3	44%
Fixed	9.5	15%
Variable	7.7	12%
Fuel	18.9	29%
Total (Excluding T&S)	**64.4**	**N/A**
CO_2 T&S	0.0	0%
Total (Including T&S)	**64.4**	**N/A**

4.3.7 Case B12B – SC PC with CO_2 Capture

The plant configuration for Case B12B, SC PC, is the same as Case B12A with the exception that the Cansolv system was used for the CDR facility. The nominal net output is maintained at 650 MW by increasing the boiler size and turbine/generator size to account for the greater auxiliary load imposed by the CDR facility and CO_2 compressors. Unlike the NGCC cases where gross output was fixed by the available size of the CTs, the PC cases utilize boilers and steam turbines that can be procured at nearly any desired output making it possible to maintain a constant net output.

The process description for Case B12B is essentially the same as Case B12A with one notable exception, the addition of CO_2 capture. A BFD and stream tables for Case B12B are shown in Exhibit 4-63 and Exhibit 4-64, respectively. Since the CDR facility process description was provided in Section 4.1.8, it is not repeated here.

4.3.8 Case B12B – Performance Results

The Case B12B modeling assumptions were presented previously in Section 4.3.1.

The plant produces a net output of 650 MW at a net plant efficiency of 31.5 percent (HHV basis). Overall plant performance is summarized in Exhibit 4-65; Exhibit 4-66 provides a detailed breakdown of the auxiliary power requirements. The CDR facility, including CO_2 compression, accounts for over half of the auxiliary plant load. The CWS (CWPs and cooling tower fan) accounts for nearly 12 percent of the auxiliary load, largely due to the high cooling water demand of the CDR facility and CO_2 compressors.

Exhibit 4-63. Case B12B block flow diagram, SC unit with CO_2 capture

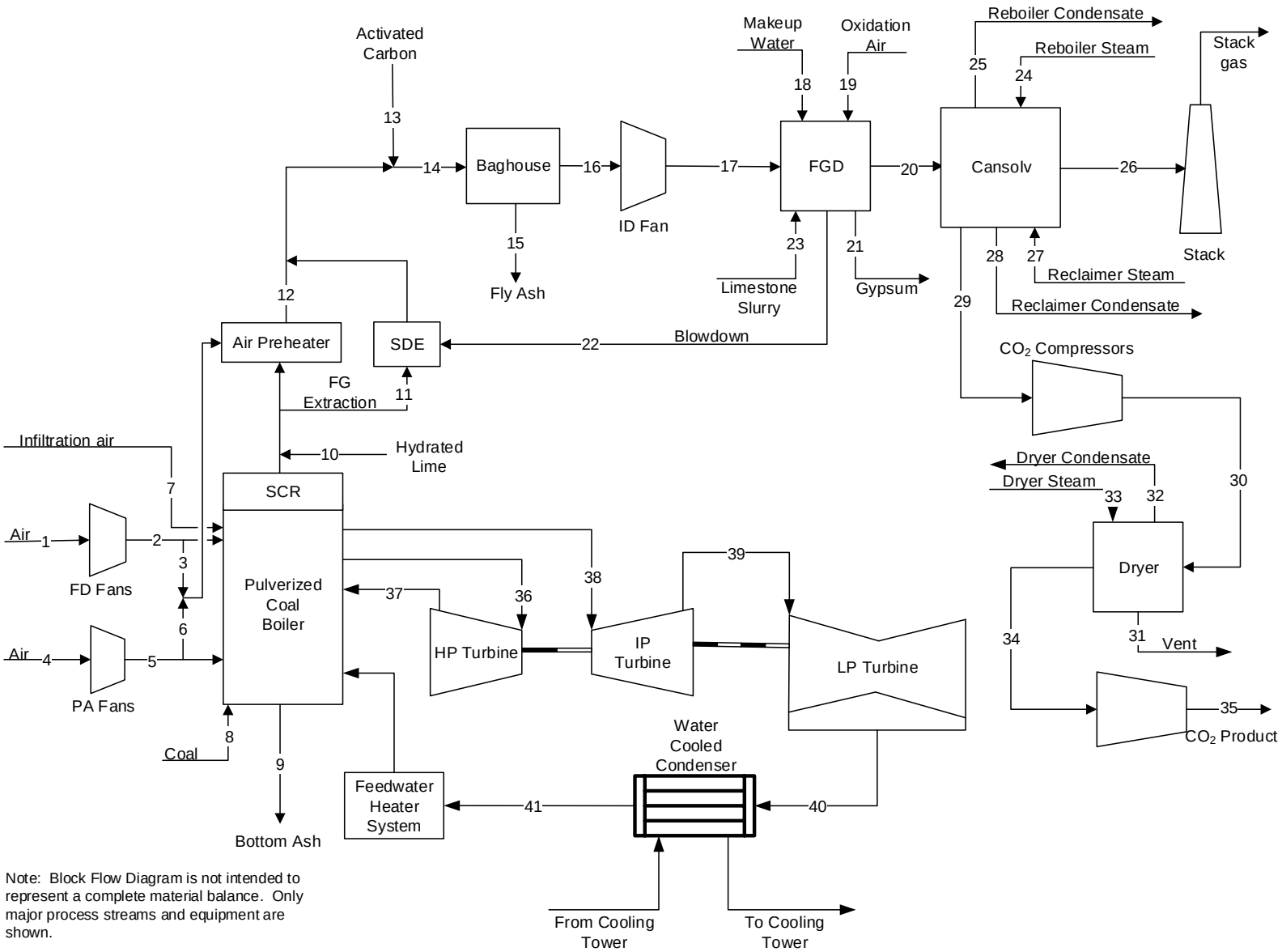

Note: Block Flow Diagram is not intended to represent a complete material balance. Only major process streams and equipment are shown.

Exhibit 4-64. Case B12B stream table, SC unit with capture

	1	2	3	4	5	6	7	8	9	10	11	12	13	14	15
V-L Mole Fraction															
Ar	0.0092	0.0092	0.0092	0.0092	0.0092	0.0092	0.0092	0.0000	0.0000	0.0000	0.0087	0.0088	0.0000	0.0087	0.0000
CO_2	0.0003	0.0003	0.0003	0.0003	0.0003	0.0003	0.0003	0.0000	0.0000	0.0000	0.1457	0.1379	0.0000	0.1372	0.0000
H_2	0.0000	0.0000	0.0000	0.0000	0.0000	0.0000	0.0000	0.0000	0.0000	0.0000	0.0000	0.0000	0.0000	0.0000	0.0000
H_2O	0.0099	0.0099	0.0099	0.0099	0.0099	0.0099	0.0099	0.0000	0.0000	1.0000	0.0879	0.0837	0.0000	0.0911	0.0000
HCl	0.0000	0.0000	0.0000	0.0000	0.0000	0.0000	0.0000	0.0000	0.0000	0.0000	0.0001	0.0001	0.0000	0.0001	0.0000
N_2	0.7732	0.7732	0.7732	0.7732	0.7732	0.7732	0.7732	0.0000	0.0000	0.0000	0.7318	0.7340	0.0000	0.7281	0.0000
O_2	0.2074	0.2074	0.2074	0.2074	0.2074	0.2074	0.2074	0.0000	0.0000	0.0000	0.0237	0.0336	0.0000	0.0329	0.0000
SO_2	0.0000	0.0000	0.0000	0.0000	0.0000	0.0000	0.0000	0.0000	0.0000	0.0000	0.0021	0.0020	0.0000	0.0020	0.0000
SO_3	0.0000	0.0000	0.0000	0.0000	0.0000	0.0000	0.0000	0.0000	0.0000	0.0000	0.0000	0.0000	0.0000	0.0000	0.0000
NaCl	0.0000	0.0000	0.0000	0.0000	0.0000	0.0000	0.0000	0.0000	0.0000	0.0000	0.0000	0.0000	0.0000	0.0000	0.1141
$CaCl_2$	0.0000	0.0000	0.0000	0.0000	0.0000	0.0000	0.0000	0.0000	0.0000	0.0000	0.0000	0.0000	0.0000	0.0001	0.8859
Total	1.0000	1.0000	1.0000	1.0000	1.0000	1.0000	1.0000	0.0000	0.0000	1.0000	1.0000	1.0000	0.0000	1.0000	1.0000
V-L Flowrate (kg_{mol}/hr)	74,599	74,599	2,210	22,916	22,916	3,154	1,649	0	0	1	4,914	99,723	0	105,468	6
V-L Flowrate (kg/hr)	2,152,703	2,152,703	63,760	661,288	661,288	91,010	47,582	0	0	15	146,141	2,961,204	0	3,122,727	674
Solids Flowrate (kg/hr)	0	0	0	0	0	0	0	273,628	5,516	1,491	1,180	22,667	59	24,140	24,156
Temperature (°C)	15	19	19	15	25	25	15	15	1,316	15	385	143	15	143	143
Pressure (MPa, abs)	0.10	0.11	0.11	0.10	0.11	0.11	0.10	0.10	0.10	0.10	0.10	0.10	0.10	0.10	0.10
Steam Table Enthalpy (kJ/kg)[A]	30.23	34.36	34.36	30.23	40.78	40.78	30.23	---	---	---	---	---	---	---	---
AspenPlus Enthalpy (kJ/kg)[B]	-97.58	-93.45	-93.45	-97.58	-87.03	-87.03	-97.58	-2,119.02	1,267.06	-13,402.95	-2,261.17	-2,394.16	-6.79	-2,452.91	-1,065.72
Density (kg/m³)	1.2	1.2	1.2	1.2	1.3	1.3	1.2	---	---	1,003.6	0.5	0.9	---	0.9	2,150.2
V-L Molecular Weight	28.857	28.857	28.857	28.857	28.857	28.857	28.857	---	---	18.015	29.742	29.694	---	29.608	104.986
V-L Flowrate (lb_{mol}/hr)	164,463	164,463	4,871	50,521	50,521	6,953	3,635	0	0	2	10,833	219,851	0	232,518	14
V-L Flowrate (lb/hr)	4,745,898	4,745,898	140,566	1,457,890	1,457,890	200,642	104,901	0	0	33	322,185	6,528,337	0	6,884,434	1,487
Solids Flowrate (lb/hr)	0	0	0	0	0	0	0	603,246	12,161	3,288	2,602	49,972	130	53,220	53,256
Temperature (°F)	59	66	66	59	78	78	59	59	2,400	59	726	289	59	289	289
Pressure (psia)	14.7	15.3	15.3	14.7	16.1	16.1	14.7	14.7	14.6	14.7	14.6	14.4	14.7	14.4	14.4
Steam Table Enthalpy (Btu/lb)[A]	13.0	14.8	14.8	13.0	17.5	17.5	13.0	---	---	---	---	---	---	---	---
AspenPlus Enthalpy (Btu/lb)[B]	-42.0	-40.2	-40.2	-42.0	-37.4	-37.4	-42.0	-911.0	544.7	-5,762.2	-972.1	-1,029.3	-2.9	-1,054.6	-458.2
Density (lb/ft³)	0.076	0.078	0.078	0.076	0.081	0.081	0.076	---	---	62.650	0.034	0.053	---	0.053	134.233

[A]Steam table reference conditions are 32.02°F & 0.089 psia

[B]Aspen thermodynamic reference state is the component's constituent elements in an ideal gas state at 25°C and 1 atm

Exhibit 4-64. Case B12B stream table, SC unit with capture (continued)

	16	17	18	19	20	21	22	23	24	25	26	27	28	29	30
V-L Mole Fraction															
Ar	0.0087	0.0087	0.0000	0.0092	0.0081	0.0000	0.0000	0.0000	0.0000	0.0000	0.0106	0.0000	0.0000	0.0000	0.0000
CO_2	0.1372	0.1372	0.0000	0.0003	0.1246	0.0001	0.0000	0.0000	0.0000	0.0000	0.0163	0.0000	0.0000	0.9861	0.9977
H_2	0.0000	0.0000	0.0000	0.0000	0.0000	0.0000	0.0000	0.0000	0.0000	0.0000	0.0000	0.0000	0.0000	0.0000	0.0000
H_2O	0.0911	0.0911	0.9967	0.0099	0.1497	0.9998	0.9943	0.9999	1.0000	1.0000	0.0358	1.0000	1.0000	0.0139	0.0023
HCl	0.0001	0.0001	0.0000	0.0000	0.0000	0.0000	0.0000	0.0000	0.0000	0.0000	0.0000	0.0000	0.0000	0.0000	0.0000
N_2	0.7281	0.7281	0.0000	0.7732	0.6812	0.0000	0.0000	0.0000	0.0000	0.0000	0.8898	0.0000	0.0000	0.0000	0.0000
O_2	0.0329	0.0329	0.0000	0.2074	0.0364	0.0000	0.0000	0.0000	0.0000	0.0000	0.0475	0.0000	0.0000	0.0000	0.0000
SO_2	0.0020	0.0020	0.0000	0.0000	0.0000	0.0000	0.0000	0.0000	0.0000	0.0000	0.0000	0.0000	0.0000	0.0000	0.0000
SO_3	0.0000	0.0000	0.0000	0.0000	0.0000	0.0000	0.0000	0.0000	0.0000	0.0000	0.0000	0.0000	0.0000	0.0000	0.0000
NaCl	0.0000	0.0000	0.0005	0.0000	0.0000	0.0001	0.0009	0.0001	0.0000	0.0000	0.0000	0.0000	0.0000	0.0000	0.0000
$CaCl_2$	0.0000	0.0000	0.0028	0.0000	0.0000	0.0000	0.0048	0.0000	0.0000	0.0000	0.0000	0.0000	0.0000	0.0000	0.0000
Total	1.0000	1.0000	1.0000	1.0000	1.0000	1.0000	1.0000	1.0000	1.0000	1.0000	1.0000	1.0000	1.0000	1.0000	1.0000
V-L Flowrate (kg_{mol}/hr)	105,462	105,462	14,497	4,415	117,745	248	832	3,432	33,118	29,914	90,137	146	146	13,394	13,238
V-L Flowrate (kg/hr)	3,122,036	3,122,036	265,252	127,397	3,385,665	4,473	15,382	61,832	596,626	538,904	2,544,772	2,634	2,634	584,619	581,812
Solids Flowrate (kg/hr)	0	0	2,391	0	0	40,233	234	26,469	0	0	0	0	0	0	0
Temperature (°C)	143	154	27	15	57	15	57	15	269	100	30	342	214	30	29
Pressure (MPa, abs)	0.10	0.11	0.10	0.10	0.10	0.10	0.10	0.10	0.51	0.10	0.10	4.90	2.04	0.20	3.04
Steam Table Enthalpy (kJ/kg)[A]	287.72	299.40	---	30.23	294.95	---	---	---	3,000.14	417.50	88.41	3,049.81	913.81	37.70	-6.17
AspenPlus Enthalpy (kJ/kg)[B]	-2,463.94	-2,452.26	-15,763.52	-97.58	-2,930.88	-12,513.34	-15,496.74	-14,994.25	-12,980.15	-15,562.79	-528.00	-12,930.48	-15,066.49	-8,964.74	-8,975.08
Density (kg/m³)	0.8	0.9	1,002.5	1.2	1.1	881.1	979.6	1,003.7	2.1	958.7	1.1	19.2	848.5	3.5	63.6
V-L Molecular Weight	29.603	29.603	18.297	28.857	28.754	18.021	18.495	18.019	18.015	18.015	28.232	18.015	18.015	43.648	43.950
V-L Flowrate (lb_{mol}/hr)	232,504	232,504	31,960	9,733	259,583	547	1,834	7,565	73,012	65,948	198,717	322	322	29,528	29,185
V-L Flowrate (lb/hr)	6,882,912	6,882,912	584,781	280,861	7,464,113	9,861	33,912	136,315	1,315,336	1,188,079	5,610,263	5,807	5,807	1,288,863	1,282,675
Solids Flowrate (lb/hr)	0	0	5,272	0	0	88,698	517	58,354	0	0	0	0	0	0	0
Temperature (°F)	289	309	80	59	134	59	134	59	517	211	87	648	416	86	85
Pressure (psia)	14.2	15.3	14.7	14.7	14.8	14.7	14.7	14.7	73.5	14.5	14.8	710.8	296.6	28.9	441.1
Steam Table Enthalpy (Btu/lb)[A]	123.7	128.7	---	13.0	126.8	---	---	---	1,289.8	179.5	38.0	1,311.2	392.9	16.2	-2.7
AspenPlus Enthalpy (Btu/lb)[B]	-1,059.3	-1,054.3	-6,777.1	-42.0	-1,260.1	-5,379.8	-6,662.4	-6,446.4	-5,580.5	-6,690.8	-227.0	-5,559.1	-6,477.4	-3,854.1	-3,858.6
Density (lb/ft³)	0.052	0.055	62.581	0.076	0.067	55.008	61.155	62.658	0.128	59.847	0.071	1.197	52.968	0.218	3.973

[A]Steam table reference conditions are 32.02°F & 0.089 psia

[B]Aspen thermodynamic reference state is the component's constituent elements in an ideal gas state at 25°C and 1 atm

Exhibit 4-64. Case B12B stream table, SC unit with capture (continued)

	31	32	33	34	35	36	37	38	39	40	41
V-L Mole Fraction											
Ar	0.0000	0.0000	0.0000	0.0000	0.0000	0.0000	0.0000	0.0000	0.0000	0.0000	0.0000
CO_2	0.0500	0.0000	0.0000	0.9995	0.9995	0.0000	0.0000	0.0000	0.0000	0.0000	0.0000
H_2	0.0000	0.0000	0.0000	0.0000	0.0000	0.0000	0.0000	0.0000	0.0000	0.0000	0.0000
H_2O	0.9500	1.0000	1.0000	0.0005	0.0005	1.0000	1.0000	1.0000	1.0000	1.0000	1.0000
HCl	0.0000	0.0000	0.0000	0.0000	0.0000	0.0000	0.0000	0.0000	0.0000	0.0000	0.0000
N_2	0.0000	0.0000	0.0000	0.0000	0.0000	0.0000	0.0000	0.0000	0.0000	0.0000	0.0000
O_2	0.0000	0.0000	0.0000	0.0000	0.0000	0.0000	0.0000	0.0000	0.0000	0.0000	0.0000
SO_2	0.0000	0.0000	0.0000	0.0000	0.0000	0.0000	0.0000	0.0000	0.0000	0.0000	0.0000
SO_3	0.0000	0.0000	0.0000	0.0000	0.0000	0.0000	0.0000	0.0000	0.0000	0.0000	0.0000
NaCl	0.0000	0.0000	0.0000	0.0000	0.0000	0.0000	0.0000	0.0000	0.0000	0.0000	0.0000
$CaCl_2$	0.0000	0.0000	0.0000	0.0000	0.0000	0.0000	0.0000	0.0000	0.0000	0.0000	0.0000
Total	1.0000	1.0000	1.0000	1.0000	1.0000	1.0000	1.0000	1.0000	1.0000	1.0000	1.0000
V-L Flowrate (kg_{mol}/hr)	25	17	17	13,213	13,213	133,851	111,754	111,754	96,268	42,848	66,623
V-L Flowrate (kg/hr)	487	309	309	581,324	581,324	2,411,369	2,013,284	2,013,284	1,734,295	771,916	1,200,232
Solids Flowrate (kg/hr)	0	0	0	0	0	0	0	0	0	0	0
Temperature (°C)	29	203	461	29	30	593	342	593	270	38	39
Pressure (MPa, abs)	3.04	1.64	2.14	2.90	15.27	24.23	4.90	4.80	0.52	0.01	1.26
Steam Table Enthalpy (kJ/kg)[A]	137.79	863.65	3,379.61	-6.32	-231.09	3,477.96	3,049.81	3,652.36	3,000.14	2,343.61	162.36
AspenPlus Enthalpy (kJ/kg)[B]	-15,225.37	-15,116.65	-12,600.69	-8,969.87	-9,194.65	-12,502.33	-12,930.48	-12,327.93	-12,980.15	-13,636.69	-15,817.93
Density (kg/m^3)	375.2	861.8	6.4	60.1	630.1	69.2	19.2	12.3	2.1	0.1	993.3
V-L Molecular Weight	19.315	18.015	18.015	43.997	43.997	18.015	18.015	18.015	18.015	18.015	18.015
V-L Flowrate (lb_{mol}/hr)	56	38	38	29,129	29,129	295,092	246,376	246,376	212,235	94,463	146,879
V-L Flowrate (lb/hr)	1,074	681	681	1,281,601	1,281,601	5,316,158	4,438,532	4,438,532	3,823,465	1,701,783	2,646,058
Solids Flowrate (lb/hr)	0	0	0	0	0	0	0	0	0	0	0
Temperature (°F)	85	397	862	85	86	1,100	648	1,100	517	101	101
Pressure (psia)	441.1	237.4	310.1	421.1	2,214.7	3,514.7	710.8	696.6	75.0	1.0	183.1
Steam Table Enthalpy (Btu/lb)[A]	59.2	371.3	1,453.0	-2.7	-99.4	1,495.3	1,311.2	1,570.2	1,289.8	1,007.6	69.8
AspenPlus Enthalpy (Btu/lb)[B]	-6,545.7	-6,499.0	-5,417.3	-3,856.4	-3,953.0	-5,375.0	-5,559.1	-5,300.1	-5,580.5	-5,862.7	-6,800.5
Density (lb/ft^3)	23.421	53.801	0.402	3.755	39.338	4.319	1.197	0.768	0.131	0.003	62.009

[A]Steam table reference conditions are 32.02°F & 0.089 psia

[B]Aspen thermodynamic reference state is the component's constituent elements in an ideal gas state at 25°C and 1 atm

Exhibit 4-65. Case B12B plant performance summary

Performance Summary	
Total Gross Power, MWe	**770**
CO_2 Capture/Removal Auxiliaries, kWe	27,300
CO_2 Compression, kWe	44,380
Balance of Plant, kWe	48,320
Total Auxiliaries, MWe	**120**
Net Power, MWe	**650**
HHV Net Plant Efficiency, %	31.5%
HHV Net Plant Heat Rate, kJ/kWh (Btu/kWh)	11,430 (10,834)
LHV Net Plant Efficiency, %	32.7%
LHV Net Plant Heat Rate, kJ/kWh (Btu/kWh)	11,024 (10,449)
HHV Boiler Efficiency, %	88.1%
LHV Boiler Efficiency, %	91.3%
Steam Turbine Cycle Efficiency, %	57.5%
Steam Turbine Heat Rate, kJ/kWh (Btu/kWh)	6,256 (5,930)
Condenser Duty, GJ/hr (MMBtu/hr)	2,127 (2,016)
AGR Cooling Duty, GJ/hr (MMBtu/hr)	2,344 (2,222)
As-Received Coal Feed, kg/hr (lb/hr)	273,628 (603,246)
Limestone Sorbent Feed, kg/hr (lb/hr)	26,469 (58,354)
HHV Thermal Input, kWt	2,062,478
LHV Thermal Input, kWt	1,989,286
Raw Water Withdrawal, $(m^3/min)/MW_{net}$ (gpm/MW_{net})	0.058 (15.3)
Raw Water Consumption, $(m^3/min)/MW_{net}$ (gpm/MW_{net})	0.041 (10.8)
Excess Air, %	20.3%

Exhibit 4-66. Case B12B plant power summary

Power Summary	
Steam Turbine Power, MWe	770
Total Gross Power, MWe	**770**
Auxiliary Load Summary	
Activated Carbon Injection, kWe	40
Ash Handling, kWe	880
Baghouse, kWe	120
Circulating Water Pumps, kWe	9,610
CO_2 Capture/Removal Auxiliaries, kWe	27,300
CO_2 Compression, kWe	44,380
Coal Handling and Conveying, kWe	530
Condensate Pumps, kWe	790
Cooling Tower Fans, kWe	4,970
Dry Sorbent Injection, kWe	80
Flue Gas Desulfurizer, kWe	4,230
Forced Draft Fans, kWe	2,560
Ground Water Pumps, kWe	900
Induced Draft Fans, kWe	10,440
Miscellaneous Balance of Plant[A,B], kWe	2,250
Primary Air Fans, kWe	2,010
Pulverizers, kWe	4,100
SCR, kWe	50
Sorbent Handling & Reagent Preparation, kWe	1,280
Spray Dryer Evaporator, kWe	300
Steam Turbine Auxiliaries, kWe	500
Transformer Losses, kWe	2,680
Total Auxiliaries, MWe	**120**
Net Power, MWe	**650**

[A]Boiler feed pumps are turbine driven
[B]Includes plant control systems, lighting, HVAC, and miscellaneous low voltage loads

4.3.8.1 Environmental Performance

The environmental targets for emissions of Hg, NOx, SO_2, and PM were presented in Section 2.3. A summary of the plant air emissions for Case B12B is presented in Exhibit 4-67. SO_2 emissions are utilized as a surrogate for HCl emissions; therefore, HCl is not reported.

Exhibit 4-67. Case B12B air emissions

	kg/GJ (lb/MMBtu)	Tonne/year (ton/year)[A]	kg/MWh (lb/MWh)[B]
SO_2	0.000 (0.000)	0 (0)	0.000 (0.000)
NOx	0.033 (0.077)	1,819 (2,006)	0.318 (0.700)
Particulate	0.004 (0.010)	234 (258)	0.041 (0.090)
Hg	1.41E-7 (3.28E-7)	0.008 (0.009)	1.36E-6 (3.00E-6)
CO_2	9 (20)	480,897 (530,098)	84 (185)
CO_2[C]	-	-	99 (219)
	mg/Nm^3		
Particulate Concentration[D,E]	13.3		

[A]Calculations based on an 85 percent capacity factor
[B]Emissions based on gross power except where otherwise noted
[C]CO_2 emissions based on net power instead of gross power
[D]Concentration of particles in the flue gas after the baghouse
[E]Normal conditions given at 32°F and 14.696 psia

SO_2 emissions are controlled using a wet limestone forced oxidation scrubber that achieves a removal efficiency of 98 percent. The byproduct calcium sulfate is dewatered and stored on site. The wallboard grade material can potentially be marketed and sold, but since it is highly dependent on local market conditions, no byproduct credit was taken. The SO_2 emissions are further reduced to 2 ppmv using a NaOH based polishing scrubber in the CDR facility. The remaining low concentration of SO_2 is essentially completely removed in the CDR absorber vessel resulting in very low SO_2 emissions (reported as zero here).

NOx emissions are controlled to about 0.15 kg/GJ (0.35 lb/MMBtu) using LNBs and OFA. An SCR unit then further reduces the NOx concentration by 78.1 percent to 0.03 kg/GJ (0.08 lb/MMBtu).

Particulate emissions are controlled using a pulse jet fabric filter, which operates at an efficiency of 99.9 percent.

The total reduction in mercury emission via the combined control equipment (SCR, ACI, fabric filter, DSI, and wet FGD) is 97.1 percent.

Ninety percent of the CO_2 in the flue gas is removed in CDR facility.

The carbon input to the plant consists of carbon in the coal, carbon in the air, PAC, and carbon in the limestone reagent used in the FGD. Carbon leaves the plant mostly as CO_2 product from the CO_2 compression train; however, some CO_2 exits through the stack, the PAC is captured in the fabric filter, unburned carbon remains in the bottom ash, and some leaves as gypsum. The carbon capture efficiency is defined as one minus the amount of carbon in the stack gas relative to the total carbon in, represented by the following fraction:

$$\frac{Carbon\ in\ Stack}{(Total\ Carbon\ In)} = \left(1 - \left(\frac{38{,}859}{391{,}485}\right)\right) * 100 = 90.0\%$$

Exhibit 4-68. Case B12B carbon balance

Carbon In		Carbon Out	
	kg/hr (lb/hr)		kg/hr (lb/hr)
Coal	174,423 (384,538)	Stack Gas	17,626 (38,859)
Air (CO_2)	406 (896)	FGD Product	207 (456)
PAC	59 (130)	Baghouse	896 (1,975)
FGD Reagent	2,686 (5,921)	Bottom Ash	209 (461)
		CO_2 Product	158,621 (349,698)
		CO_2 Dryer Vent	15 (33)
		CO_2 Knockout	0.3 (0.8)
Total	**177,574 (391,485)**	**Total**	**177,574 (391,485)**

Exhibit 4-69 shows the sulfur balance for the plant. Sulfur input comes solely from the sulfur in the coal. Sulfur output includes the sulfur recovered from the FGD as gypsum, sulfur emitted in the stack gas, and sulfur removed in the polishing scrubber.

Exhibit 4-69. Case B12B sulfur balance

Sulfur In		Sulfur Out	
	kg/hr (lb/hr)		kg/hr (lb/hr)
Coal	6,858 (15,120)	FGD Product	6,448 (14,215)
		Stack Gas	0 (0)
		Polishing Scrubber and Solvent Reclaiming	134 (295)
		Baghouse	276 (609)
Total	**6,858 (15,120)**	**Total**	**6,858 (15,120)**

Exhibit 4-70 shows the overall water balance for the plant. The exhibit is presented in an identical manner as for Case B12A. The only notable difference is the FGD makeup water source. In CO_2 capture cases, a significant amount of water is recovered from the initial CDR facility cooling step. This water would otherwise be discharged; however, it is suitable to be used as FGD makeup. The balance of the water from the CDR facility is sent to discharge.

Exhibit 4-70. Case B12B water balance

Water Use	Water Demand	Internal Recycle	Raw Water Withdrawal	Process Water Discharge	Raw Water Consumption
	m^3/min (gpm)	m^3/min (gpm)	m^3/min (gpm)	m^3/min (gpm)	m^3/min (gpm)
FGD Process Makeup	2.8 (750)	2.8 (750)	–	–	–
CO_2 Drying	–	–	–	0.0 (2.1)	0.0 (-2.1)
CO_2 Capture Recovery	–	–	–	2.4 (633)	-2.4 (-633)
CO_2 Compression KO	–	–	–	0.0 (12)	0.0 (-12)
Deaerator Vent	–	–	–	0.1 (21)	-0.1 (-21)
Condenser Makeup	**0.1 (21)**	**–**	**0.1 (21)**	**–**	**0.1 (21)**
BFW Makeup	0.1 (21)	–	0.1 (21)	–	0.1 (21)
Cooling Tower	**37 (9,890)**	**–**	**37 (9,890)**	**8.4 (2,224)**	**29 (7,666)**
BFW Blowdown	–	–	–	–	–
Total	**40 (10,661)**	**2.8 (750)**	**38 (9,911)**	**11 (2,893)**	**27 (7,018)**

4.3.8.2 Energy and Mass Balance Diagrams

An energy and mass balance diagram is shown for the Case B12B PC boiler, the FGD unit, CDR system, and steam cycle in Exhibit 4-71 and Exhibit 4-72. An overall plant energy balance is provided in tabular form in Exhibit 4-73.

The power out is the steam turbine power prior to generator losses. The power at the generator terminals (shown in Exhibit 4-65) is calculated by multiplying the power out by a generator efficiency of 98.5 percent. The cooling tower load includes the condenser, capture process heat rejected to cooling water, the CO_2 compressor intercooler load, and other miscellaneous cooling loads.

Exhibit 4-71. Case B12B energy and mass balance, SC PC boiler with CO_2 capture

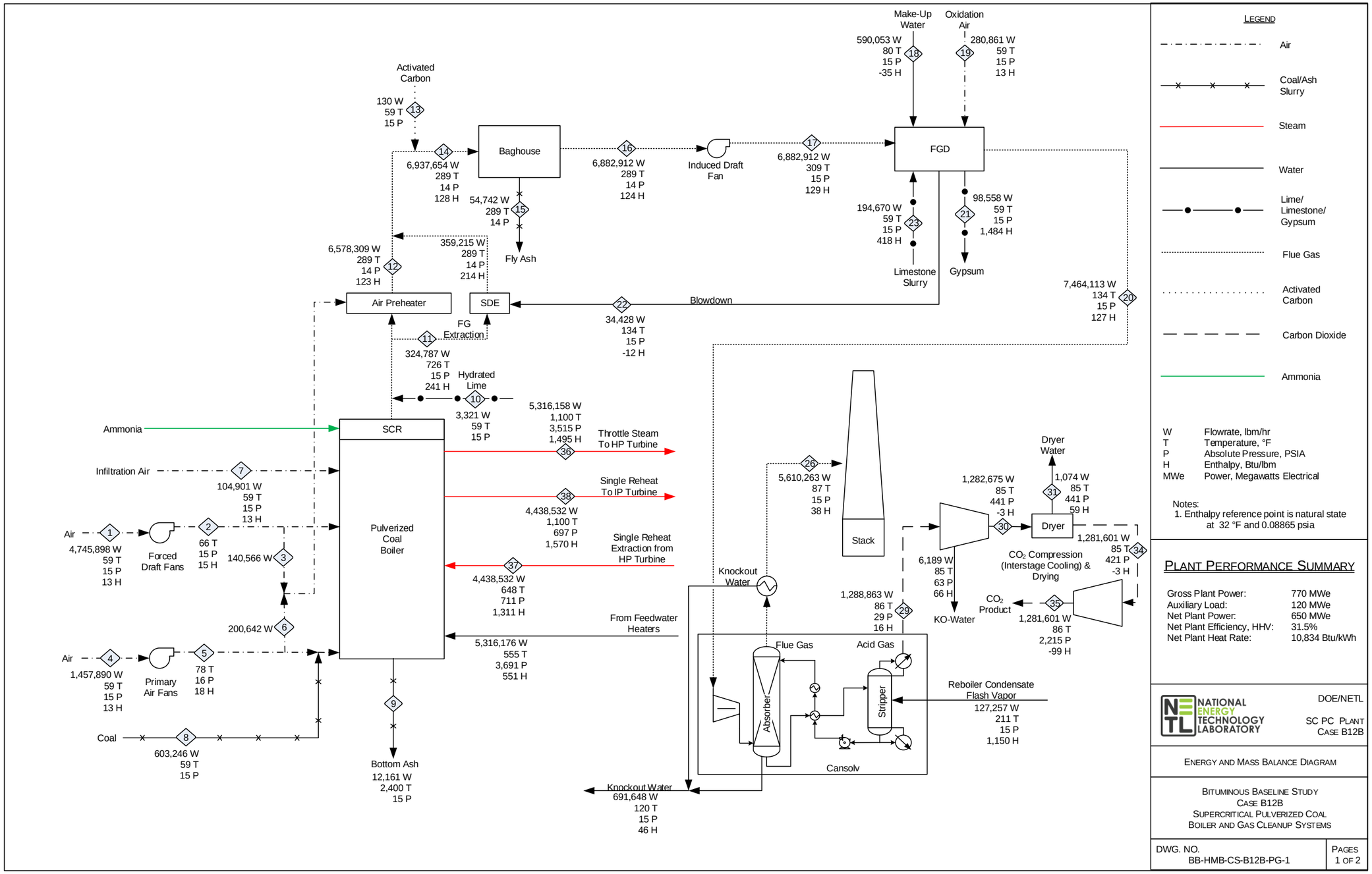

Exhibit 4-72. Case B12B energy and mass balance, SC steam cycle

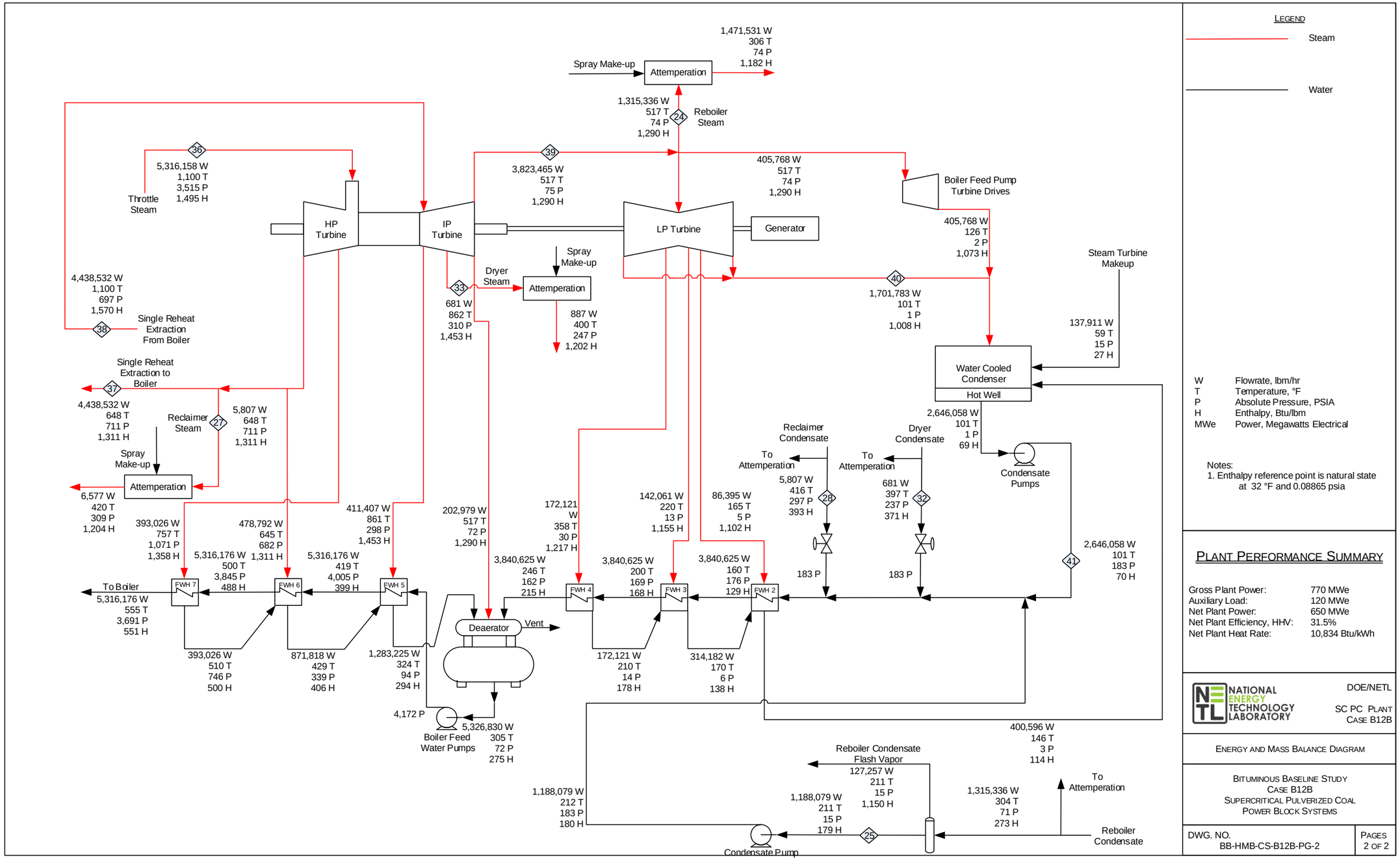

Exhibit 4-73. Case B12B overall energy balance (0°C [32°F] reference)

	HHV	Sensible + Latent	Power	Total
Heat In GJ/hr (MMBtu/hr)				
Coal	7,425 (7,037)	6.2 (5.9)	–	7,431 (7,043)
Air	–	86 (82)	–	86 (82)
Raw Water Makeup	–	141 (134)	–	141 (134)
Limestone	–	0.6 (0.5)	–	0.6 (0.5)
Auxiliary Power	–	–	432 (409)	432 (409)
TOTAL	**7,425 (7,037)**	**234 (222)**	**432 (409)**	**8,091 (7,669)**
Heat Out GJ/hr (MMBtu/hr)				
Bottom Ash	–	7.0 (6.7)	–	7.0 (6.7)
Fly Ash	–	2.5 (2.4)	–	2.5 (2.4)
Stack Gas	–	225 (213)	–	225 (213)
Sulfur	2.5 (2.4)	0.0 (0.0)	–	2.5 (2.4)
Gypsum	–	2.6 (2.5)	–	2.6 (2.5)
Motor Losses and Design Allowances	–	–	50 (48)	50 (48)
Cooling Tower Load[A]	–	4,889 (4,634)	–	4,889 (4,634)
CO_2 Product Stream	–	-134 (-127)	–	-134 (-127)
Blowdown Streams and Deaerator Vent	–	3.1 (2.9)	–	3.1 (2.9)
Ambient Losses[B]	–	177 (167)	–	177 (167)
Power	–	–	2,771 (2,626)	2,771 (2,626)
TOTAL	**2.5 (2.4)**	**5,171 (4,901)**	**2,821 (2,674)**	**7,995 (7,577)**
Unaccounted Energy[C]	–	–	–	*97 (92)*

[A]Includes condenser, AGR, and miscellaneous cooling loads
[B]Ambient losses include all losses to the environment through radiation, convection, etc. Sources of these losses include the boiler, reheater, superheater, and transformers
[C]By difference

4.3.9 Case B12B – Major Equipment List

Major equipment items for the SC PC plant with CO_2 capture are shown in the following tables. The accounts used in the equipment list correspond to the account numbers used in the cost estimates in Section 4.3.10. In general, the design conditions include a 10 percent contingency for flows and heat duties and a 21 percent contingency for heads on pumps and fans.

Case B12B – Account 1: Coal and Sorbent Handling

Equipment No.	Description	Type	Design Condition	Operating Qty.	Spares
1	Bottom Trestle Dumper and Receiving Hoppers	N/A	180 tonne (200 ton)	2	0
2	Feeder	Belt	570 tonne/hr (630 tph)	2	0
3	Conveyor No. 1	Belt	1,130 tonne/hr (1,250 tph)	1	0
4	Transfer Tower No. 1	Enclosed	N/A	1	0
5	Conveyor No. 2	Belt	1,130 tonne/hr (1,250 tph)	1	0
6	As-Received Coal Sampling System	Two-stage	N/A	1	0
7	Stacker/Reclaimer	Traveling, linear	1,130 tonne/hr (1,250 tph)	1	0
8	Reclaim Hopper	N/A	60 tonne (60 ton)	2	1
9	Feeder	Vibratory	230 tonne/hr (250 tph)	2	1
10	Conveyor No. 3	Belt w/ tripper	450 tonne/hr (500 tph)	1	0
11	Crusher Tower	N/A	N/A	1	0
12	Coal Surge Bin w/ Vent Filter	Dual outlet	230 tonne (250 ton)	2	0
13	Crusher	Impactor reduction	8 cm x 0 - 3 cm x 0 (3 in x 0 - 1-1/4 in x 0)	2	0
14	As-Fired Coal Sampling System	Swing hammer	N/A	1	1
15	Conveyor No. 4	Belt w/tripper	450 tonne/hr (500 tph)	1	0
16	Transfer Tower No. 2	Enclosed	N/A	1	0
17	Conveyor No. 5	Belt w/ tripper	450 tonne/hr (500 tph)	1	0
18	Coal Silo w/ Vent Filter and Slide Gates	Field erected	1,000 tonne (1,100 ton)	3	0
19	Activated Carbon Storage Silo and Feeder System	Shop assembled	Silo - 11 tonne (12 ton) Feeder - 60 kg/hr (140 lb/hr)	1	0
20	Hydrated Lime Storage Silo and Feeder System	Shop assembled	Silo - 280 tonne (310 ton) Feeder - 1,660 kg/hr (3,650 lb/hr)	1	0
21	Limestone Truck Unloading Hopper	N/A	30 tonne (40 ton)	1	0
22	Limestone Feeder	Belt	112 tonne/hr (123 tph)	1	0
23	Limestone Conveyor No. 1	Belt	112 tonne/hr (123 tph)	1	0
24	Limestone Reclaim Hopper	N/A	22 tonne (24 ton)	1	0
25	Limestone Reclaim Feeder	Belt	87 tonne/hr (96 tph)	1	0
26	Limestone Conveyor No. 2	Belt	87 tonne/hr (96 tph)	1	0
27	Limestone Day Bin	w/ actuator	349 tonne (385 ton)	2	0

Case B12B – Account 2: Coal and Sorbent Preparation and Feed

Equipment No.	Description	Type	Design Condition	Operating Qty.	Spares
1	Coal Feeder	Gravimetric	50 tonne/hr (55 tph)	6	0
2	Coal Pulverizer	Ball type or equivalent	50 tonne/hr (55 tph)	6	0
3	Limestone Weigh Feeder	Gravimetric	29 tonne/hr (32 tph)	1	1
4	Limestone Ball Mill	Rotary	29 tonne/hr (32 tph)	1	1
5	Limestone Mill Slurry Tank with Agitator	N/A	113,600 liters (30,000 gal)	1	1
6	Limestone Mill Recycle Pumps	Horizontal centrifugal	1,890 lpm @ 10m H_2O (500 gpm @ 40 ft H_2O)	1	1
7	Hydroclone Classifier	4 active cyclones in a 5-cyclone bank	470 lpm (130 gpm) per cyclone	1	1
8	Distribution Box	2-way	N/A	1	1
9	Limestone Slurry Storage Tank with Agitator	Field erected	629,000 liters (166,000 gal)	1	1
10	Limestone Slurry Feed Pumps	Horizontal centrifugal	1,310 lpm @ 9m H_2O (350 gpm @ 30 ft H_2O)	1	1

Case B12B – Account 3: Feedwater and Miscellaneous Balance of Plant Systems

Equipment No.	Description	Type	Design Condition	Operating Qty.	Spares
1	Demineralized Water Storage Tank	Vertical, cylindrical, outdoor	319,000 liters (84,000 gal)	2	0
2	Condensate Pumps	Vertical canned	22,200 lpm @ 200 m H_2O (5,900 gpm @ 500 ft H_2O)	1	1
3	Deaerator and Storage Tank	Horizontal spray type	2,658,000 kg/hr (5,860,000 lb/hr), 5 min. tank	1	0
4	Boiler Feed Pump/Turbine	Barrel type, multi-stage, centrifugal	44,500 lpm @ 3,500 m H_2O (11,800 gpm @ 11,400 ft H_2O)	1	1
5	Startup Boiler Feed Pump, Electric Motor Driven	Barrel type, multi-stage, centrifugal	13,300 lpm @ 3,500 m H_2O (3,500 gpm @ 11,400 ft H_2O)	1	0
6	LP Feedwater Heater 1A/1B	Horizontal U-tube	960,000 kg/hr (2,110,000 lb/hr)	2	0
7	LP Feedwater Heater 2A/2B	Horizontal U-tube	960,000 kg/hr (2,110,000 lb/hr)	2	0
8	LP Feedwater Heater 3A/3B	Horizontal U-tube	960,000 kg/hr (2,110,000 lb/hr)	2	0
9	LP Feedwater Heater 4A/4B	Horizontal U-tube	960,000 kg/hr (2,110,000 lb/hr)	2	0
10	HP Feedwater Heater 6	Horizontal U-tube	2,650,000 kg/hr (5,850,000 lb/hr)	1	0
11	HP Feedwater Heater 7	Horizontal U-tube	2,650,000 kg/hr (5,850,000 lb/hr)	1	0
12	HP Feedwater heater 8	Horizontal U-tube	2,650,000 kg/hr (5,850,000 lb/hr)	1	0
13	Auxiliary Boiler	Shop fabricated, water tube	20,000 kg/hr, 2.8 MPa, 343°C (40,000 lb/hr, 400 psig, 650°F)	1	0
14	Gas Pipeline	Underground, coated carbon steel, wrapped cathodic protection	N/A - For Start-up Only	1	0
15	Service Air Compressors	Flooded Screw	28 m^3/min @ 0.7 MPa (1,000 scfm @ 100 psig)	2	1
16	Instrument Air Dryers	Duplex, regenerative	28 m^3/min (1,000 scfm)	2	1
17	Closed Cycle Cooling Heat Exchangers	Shell and tube	53 GJ/hr (50 MMBtu/hr) each	2	0
18	Closed Cycle Cooling Water Pumps	Horizontal centrifugal	20,800 lpm @ 30 m H_2O (5,500 gpm @ 100 ft H_2O)	2	1
19	Engine-Driven Fire Pump	Vertical turbine, diesel engine	3,785 lpm @ 88 m H_2O (1,000 gpm @ 290 ft H_2O)	1	1
20	Fire Service Booster Pump	Two-stage horizontal centrifugal	2,650 lpm @ 64 m H_2O (700 gpm @ 210 ft H_2O)	1	1
21	Raw Water Pumps	Stainless steel, single suction	9,680 lpm @ 20 m H_2O (2,560 gpm @ 60 ft H_2O)	2	1
22	Ground Water Pumps	Stainless steel, single suction	3,870 lpm @ 270 m H_2O (1,020 gpm @ 880 ft H_2O)	5	1
23	Filtered Water Pumps	Stainless steel, single suction	1,170 lpm @ 50 m H_2O (310 gpm @ 160 ft H_2O)	2	1
24	Filtered Water Tank	Vertical, cylindrical	1,119,000 liter (296,000 gal)	1	0
25	Makeup Water Demineralizer	Multi-media filter, cartridge filter, RO membrane assembly, electrodeionization unit	330 lpm (90 gpm)	1	1

Equipment No.	Description	Type	Design Condition	Operating Qty.	Spares
26	Liquid Waste Treatment System	–	10 years, 24-hour storm	1	0
27	Process Water Treatment	Spray dryer evaporator	Flue Gas - 2,470 m^3/min (87,370 acfm) @ 385°C (726°F) & 0.1 MPa (15 psia) Blowdown - 150 lpm (40 gpm) @ 19,992 ppmw Cl^-	2	1

Case B12B – Account 4: Pulverized Coal Boiler and Accessories

Equipment No.	Description	Type	Design Condition	Operating Qty.	Spares
1	Boiler	SC, drum, wall-fired, low NOx burners, overfire air	2,650,000 kg/hr steam @ 24.1 MPa/593°C/593°C (5,850,000 lb/hr steam @ 3,500 psig/1,100°F/1,100°F)	1	0
2	Primary Air Fan	Centrifugal	364,000 kg/hr, 5,000 m^3/min @ 123 cm WG (802,000 lb/hr, 175,300 acfm @ 48 in. WG)	2	0
3	Forced Draft Fan	Centrifugal	1,184,000 kg/hr, 16,200 m^3/min @ 47 cm WG (2,610,000 lb/hr, 570,600 acfm @ 19 in. WG)	2	0
4	Induced Draft Fan	Centrifugal	1,717,000 kg/hr, 34,200 m^3/min @ 93 cm WG (3,786,000 lb/hr, 1,207,200 acfm @ 36 in. WG)	2	0
5	SCR Reactor Vessel	Space for spare layer	3,250,000 kg/hr (7,160,000 lb/hr)	2	0
6	SCR Catalyst	–	–	3	0
7	Dilution Air Blower	Centrifugal	120 m^3/min @ 108 cm WG (4,400 acfm @ 42 in. WG)	2	1
8	Ammonia Storage	Horizontal tank	137,000 liter (36,000 gal)	5	0
9	Ammonia Feed Pump	Centrifugal	26 lpm @ 90 m H_2O (7 gpm @ 300 ft H_2O)	2	1

Case B12B – Account 5: Flue Gas Cleanup

Equipment No.	Description	Type	Design Condition	Operating Qty.	Spares
1	Fabric Filter	Single stage, high-ratio with pulse-jet online cleaning system	1,717,000 kg/hr (3,786,000 lb/hr) 99.9% efficiency	2	0
2	Absorber Module	Counter-current open spray	58,000 m^3/min (2,052,000 acfm)	1	0
3	Recirculation Pumps	Horizontal centrifugal	202,000 lpm @ 65 m H_2O (53,000 gpm @ 210 ft H_2O)	5	1
4	Bleed Pumps	Horizontal centrifugal	5,590 lpm (1,480 gpm) at 20 wt% solids	2	1
5	Oxidation Air Blowers	Centrifugal	960 m^3/min @ 0.3 MPa (33,770 acfm @ 37 psia)	2	1
6	Agitators	Side entering	50 hp	5	1
7	Dewatering Cyclones	Radial assembly, 5 units each	1,400 lpm (370 gpm) per cyclone	2	0

Equipment No.	Description	Type	Design Condition	Operating Qty.	Spares
8	Vacuum Filter Belt	Horizontal belt	44 tonne/hr (49 tph) of 50 wt% slurry	2	1
9	Filtrate Water Return Pumps	Horizontal centrifugal	850 lpm @ 13 m H_2O (220 gpm @ 40 ft H_2O)	1	1
10	Filtrate Water Return Storage Tank	Vertical, lined	560,000 lpm (150,000 gal)	1	0
11	Process Makeup Water Pumps	Horizontal centrifugal	1,990 lpm @ 21 m H_2O (530 gpm @ 70 ft H_2O)	1	1
12	Activated Carbon Injectors	---	60 kg/hr (140 lb/hr)	1	0
13	Hydrated Lime Injectors	---	1,660 kg/hr (3,650 lb/hr)	1	0
14	Cansolv	Amine-based CO2 capture technology	3,724,000 kg/hr (8,211,000 lb/hr) 19.1 wt% CO_2 concentration	1	0
15	Cansolv LP Condensate Pump	Centrifugal	1,287 lpm @ 1 m H_2O (340 gpm @ 4 ft H_2O)	1	1
16	Cansolv IP Condensate Pump	Centrifugal	6 lpm @ 4.6 m H_2O (2 gpm @ 15 ft H_2O)	1	1
17	CO_2 Dryer	Triethylene glycol	Inlet: 152 m^3/min @ 3.0 MPa (5,381 acfm @ 441 psia) Outlet: 2.9 MPa (421 psia) Water Recovered: 487 kg/hr (1,074 lb/hr)	1	0
18	CO_2 Compressor	Integrally geared, multi-stage centrifugal	8.0 m^3/min @ 15.3 MPa, 80°C (299 acfm @ 2,217 psia, 176°F)	2	0
19	CO_2 Aftercooler	Shell and tube heat exchanger	Outlet: 15.3 MPa, 30°C (2,215psia, 86°F) Duty: 88 MMkJ/hr (84 MMBtu/hr)	1	0

Case B12B – Account 7: Ductwork and Stack

Equipment No.	Description	Type	Design Condition	Operating Qty.	Spares
1	Stack	Reinforced concrete with FRP liner	152 m (500 ft) high x 6.0 m (20 ft) diameter	1	0

Case B12B – Account 8: Steam Turbine and Accessories

Equipment No.	Description	Type	Design Condition	Operating Qty.	Spares
1	Steam Turbine	Commercially available advanced steam turbine	798 MW 24.1 MPa/593°C/593°C (3500 psig/ 1100°F/1100°F)	1	0
2	Steam Turbine Generator	Hydrogen cooled, static excitation	890 MVA @ 0.9 p.f., 24 kV, 60 Hz, 3-phase	1	0
3	Surface Condenser	Single pass, divided waterbox including vacuum pumps	1,170 GJ/hr (2,220 MMBtu/hr), Inlet water temperature 16°C (60°F), Water temperature rise 11°C (20°F)	1	0

Case B12B – Account 9: Cooling Water System

Equipment No.	Description	Type	Design Condition	Operating Qty.	Spares
1	Circulating Water Pumps	Vertical, wet pit	965,000 lpm @ 30 m (255,000 gpm @ 100 ft)	2	1
2	Cooling Tower	Evaporative, mechanical draft, multi-cell	11°C (51.5°F) wet bulb/ 16°C (60°F) CWT/ 27°C (80°F) HWT/ 5380 GJ/hr (5100 MMBtu/hr) heat duty	1	0

Case B12B – Account 10: Ash and Spent Sorbent Handling System

Equipment No.	Description	Type	Design Condition	Operating Qty.	Spares
1	Economizer Hopper (part of boiler scope of supply)	–	–	4	0
2	Bottom Ash Hopper (part of boiler scope of supply)	–	–	2	0
3	Clinker Grinder	–	6.1 tonne/hr (6.7 tph)	1	1
4	Pyrites Hopper (part of pulverizer scope of supply included with boiler)	–	–	6	0
5	Pyrites Transfer Tank	–	–	1	0
6	Pyrite Reject Water Pump	–	–	1	0
7	Pneumatic Transport Line	Fully-dry, isolatable	–	4	0
8	Bottom Ash Storage Silo	–	–	1	1
9	Baghouse Hopper (part of baghouse scope of supply)	–	–	24	0
10	Air Heater Hopper (part of boiler scope of supply)	–	–	10	0
11	Air Blower	–	25 m^3/min @ 0.2 MPa (866 scfm @ 24 psi)	1	1
12	Fly Ash Silo	Reinforced concrete	1,610 tonne (1,770 ton)	2	0
13	Slide Gate Valves	–	–	2	0
14	Unloader	–	–	1	0
15	Telescoping Unloading Chute	–	150 tonne/hr (170 tph)	1	0

Case B12B – Account 11: Accessory Electric Plant

Equipment No.	Description	Type	Design Condition	Operating Qty.	Spares
1	STG Transformer	Oil-filled	24 kV/345 kV, 750 MVA, 3-ph, 60 Hz	1	0
2	High Voltage Transformer	Oil-filled	345 kV/13.8 kV, 25 MVA, 3-ph, 60 Hz	2	0
3	Medium Voltage Transformer	Oil-filled	24 kV/4.16 kV, 61 MVA, 3-ph, 60 Hz	1	1
4	Low Voltage Transformer	Dry ventilated	4.16 kV/480 V, 20 MVA, 3-ph, 60 Hz	1	1
5	STG Isolated Phase Bus Duct and Tap Bus	Aluminum, self-cooled	24 kV, 3-ph, 60 Hz	1	0
6	Medium Voltage Switchgear	Metal clad	4.16 kV, 3-ph, 60 Hz	1	1
7	Low Voltage Switchgear	Metal enclosed	480 V, 3-ph, 60 Hz	1	1
8	Emergency Diesel Generator	Sized for emergency shutdown	750 kW, 480 V, 3-ph, 60 Hz	1	0

Case B12B – Account 12: Instrumentation and Control

Equipment No.	Description	Type	Design Condition	Operating Qty.	Spares
1	DCS - Main Control	Monitor/keyboard; Operator printer (laser color); Engineering printer (laser B&W)	Operator stations/printers and engineering stations/printers	1	0
2	DCS - Processor	Microprocessor with redundant input/output	N/A	1	0
3	DCS - Data Highway	Fiber optic	Fully redundant, 25% spare	1	0

4.3.10 Case B12B – Cost Estimating

The cost estimating methodology was described previously in Section 2.7. Exhibit 4-74 shows a detailed breakdown of the capital costs; Exhibit 4-75 shows the owner's costs, TOC, and TASC; Exhibit 4-76 shows the initial and annual O&M costs; and Exhibit 4-77 shows the LCOE breakdown.

The estimated TPC of the SC PC boiler with CO_2 capture is $3,800/kW. Process contingency represents 3.2 percent of the TPC and project contingency represents 14.0 percent. The LCOE, including CO_2 T&S costs of $8.9/MWh, is $114.3/MWh.

Exhibit 4-74. Case B12B total plant cost details

Case:		B12B	– SC PC w/ CO_2				Estimate Type:			Conceptual	
Plant Size (MW, net):		650					Cost Base:			Dec 2018	
Item No.	Description	Equipment Cost	Material Cost	Labor		Bare Erected Cost	Eng'g CM H.O.& Fee	Contingencies		Total Plant Cost	
				Direct	Indirect			Process	Project	$/1,000	$/kW
1	Coal & Sorbent Handling										
1.1	Coal Receive & Unload	$1,176	$0	$530	$0	$1,707	$299	$0	$301	$2,306	$4
1.2	Coal Stackout & Reclaim	$3,862	$0	$863	$0	$4,726	$827	$0	$833	$6,385	$10
1.3	Coal Conveyors	$35,589	$0	$8,464	$0	$44,053	$7,709	$0	$7,764	$59,527	$92
1.4	Other Coal Handling	$4,945	$0	$1,040	$0	$5,984	$1,047	$0	$1,055	$8,086	$12
1.5	Sorbent Receive & Unload	$226	$0	$68	$0	$294	$51	$0	$52	$397	$1
1.6	Sorbent Stackout & Reclaim	$1,655	$0	$299	$0	$1,954	$342	$0	$344	$2,640	$4
1.7	Sorbent Conveyors	$2,507	$545	$607	$0	$3,659	$640	$0	$645	$4,944	$8
1.8	Other Sorbent Handling	$121	$28	$62	$0	$211	$37	$0	$37	$286	$0
1.9	Coal & Sorbent Handling Foundations	$0	$1,543	$2,034	$0	$3,577	$626	$0	$630	$4,833	$7
	Subtotal	**$50,081**	**$2,117**	**$13,967**	**$0**	**$66,164**	**$11,579**	**$0**	**$11,661**	**$89,404**	**$138**
2	Coal & Sorbent Preparation & Feed										
2.1	Coal Crushing & Drying	$2,529	$0	$486	$0	$3,014	$527	$0	$531	$4,073	$6
2.2	Prepared Coal Storage & Feed	$8,510	$0	$1,833	$0	$10,343	$1,810	$0	$1,823	$13,976	$22
2.5	Sorbent Preparation Equipment	$1,113	$48	$228	$0	$1,389	$243	$0	$245	$1,877	$3
2.6	Sorbent Storage & Feed	$1,866	$0	$704	$0	$2,570	$450	$0	$453	$3,473	$5
2.9	Coal & Sorbent Feed Foundation	$0	$739	$648	$0	$1,387	$243	$0	$244	$1,874	$3
	Subtotal	**$14,018**	**$787**	**$3,898**	**$0**	**$18,703**	**$3,273**	**$0**	**$3,296**	**$25,272**	**$39**
3	Feedwater & Miscellaneous BOP Systems										
3.1	Feedwater System	$3,985	$6,832	$3,416	$0	$14,233	$2,491	$0	$2,509	$19,233	$30
3.2	Water Makeup & Pretreating	$8,253	$825	$4,677	$0	$13,755	$2,407	$0	$3,232	$19,395	$30
3.3	Other Feedwater Subsystems	$3,113	$1,021	$970	$0	$5,104	$893	$0	$900	$6,897	$11
3.4	Service Water Systems	$2,618	$4,998	$16,184	$0	$23,800	$4,165	$0	$5,593	$33,558	$52
3.5	Other Boiler Plant Systems	$770	$280	$700	$0	$1,751	$306	$0	$309	$2,366	$4
3.6	Natural Gas Pipeline and Start-Up System	$3,348	$144	$108	$0	$3,600	$630	$0	$634	$4,864	$7
3.7	Waste Water Treatment Equipment	$14,870	$0	$9,114	$0	$23,984	$4,197	$0	$5,636	$33,817	$52
3.8	Spray Dryer Evaporator	$16,746	$0	$9,695	$0	$26,441	$4,627	$0	$6,214	$37,282	$57
3.9	Miscellaneous Plant Equipment	$226	$30	$115	$0	$370	$65	$0	$87	$522	$1
	Subtotal	**$53,929**	**$14,130**	**$44,979**	**$0**	**$113,038**	**$19,782**	**$0**	**$25,113**	**$157,933**	**$243**
4	Pulverized Coal Boiler & Accessories										
4.9	Pulverized Coal Boiler & Accessories	$268,915	$0	$153,226	$0	$422,141	$73,875	$0	$74,402	$570,418	$878
4.10	Selective Catalytic Reduction System	$29,346	$0	$16,721	$0	$46,068	$8,062	$0	$8,119	$62,249	$96
4.11	Boiler Balance of Plant	$1,768	$0	$1,007	$0	$2,776	$486	$0	$489	$3,751	$6
4.12	Primary Air System	$1,697	$0	$967	$0	$2,664	$466	$0	$470	$3,600	$6

Case:	B12B – SC PC w/ CO_2						Estimate Type:			Conceptual	
Plant Size (MW, net):	650						Cost Base:			Dec 2018	
Item No.	Description	Equipment Cost	Material Cost	Labor		Bare Erected Cost	Eng'g CM H.O.& Fee	Contingencies		Total Plant Cost	
				Direct	Indirect			Process	Project	$/1,000	$/kW
4.13	Secondary Air System	$2,571	$0	$1,465	$0	$4,035	$706	$0	$711	$5,453	$8
4.14	Induced Draft Fans	$5,479	$0	$3,122	$0	$8,601	$1,505	$0	$1,516	$11,622	$18
4.15	Major Component Rigging	$93	$0	$53	$0	$146	$26	$0	$26	$197	$0
4.16	Boiler Foundations	$0	$399	$351	$0	$751	$131	$0	$132	$1,014	$2
	Subtotal	**$309,869**	**$399**	**$176,913**	**$0**	**$487,181**	**$85,257**	**$0**	**$85,866**	**$658,303**	**$1,013**
5	Flue Gas Cleanup										
5.1	Cansolv Carbon Dioxide (CO_2) Removal System	$199,653	$86,357	$181,351	$0	$467,361	$81,788	$79,451	$110,005	$738,606	$1,137
5.2	WFGD Absorber Vessels & Accessories	$79,398	$0	$16,976	$0	$96,374	$16,865	$0	$16,986	$130,225	$200
5.3	Other FGD	$356	$0	$401	$0	$757	$133	$0	$133	$1,023	$2
5.4	Carbon Dioxide (CO_2) Compression & Drying	$41,405	$6,211	$13,844	$0	$61,460	$10,755	$0	$14,443	$86,659	$133
5.5	Carbon Dioxide (CO_2) Compressor Aftercooler	$455	$72	$195	$0	$722	$126	$0	$170	$1,017	$2
5.6	Mercury Removal (Dry Sorbent Injection/Activated Carbon Injection)	$2,634	$579	$2,590	$0	$5,803	$1,016	$0	$1,023	$7,841	$12
5.9	Particulate Removal (Bag House & Accessories)	$1,522	$0	$959	$0	$2,481	$434	$0	$437	$3,353	$5
5.12	Gas Cleanup Foundations	$0	$198	$173	$0	$371	$65	$0	$65	$501	$1
5.13	Gypsum Dewatering System	$764	$0	$129	$0	$892	$156	$0	$157	$1,206	$2
	Subtotal	**$326,187**	**$93,417**	**$216,617**	**$0**	**$636,222**	**$111,339**	**$79,451**	**$143,420**	**$970,432**	**$1,494**
7	Ductwork & Stack										
7.3	Ductwork	$0	$747	$519	$0	$1,266	$221	$0	$223	$1,710	$3
7.4	Stack	$8,767	$0	$5,094	$0	$13,861	$2,426	$0	$2,443	$18,730	$29
7.5	Duct & Stack Foundations	$0	$210	$249	$0	$459	$80	$0	$108	$647	$1
	Subtotal	**$8,767**	**$957**	**$5,862**	**$0**	**$15,586**	**$2,728**	**$0**	**$2,774**	**$21,087**	**$32**
8	Steam Turbine & Accessories										
8.1	Steam Turbine Generator & Accessories	$73,354	$0	$8,175	$0	$81,529	$14,268	$0	$14,369	$110,166	$170
8.2	Steam Turbine Plant Auxiliaries	$1,665	$0	$3,544	$0	$5,208	$911	$0	$918	$7,038	$11
8.3	Condenser & Auxiliaries	$11,298	$0	$3,833	$0	$15,132	$2,648	$0	$2,667	$20,447	$31
8.4	Steam Piping	$43,139	$0	$17,484	$0	$60,623	$10,609	$0	$10,685	$81,916	$126
8.5	Turbine Generator Foundations	$0	$260	$430	$0	$690	$121	$0	$162	$972	$1
	Subtotal	**$129,456**	**$260**	**$33,465**	**$0**	**$163,181**	**$28,557**	**$0**	**$28,801**	**$220,539**	**$339**
9	Cooling Water System										
9.1	Cooling Towers	$20,110	$0	$6,219	$0	$26,329	$4,608	$0	$4,640	$35,577	$55
9.2	Circulating Water Pumps	$2,849	$0	$209	$0	$3,058	$535	$0	$539	$4,133	$6

Case:	B12B – SC PC w/ CO_2						Estimate Type:			Conceptual	
Plant Size (MW, net):	650						Cost Base:			Dec 2018	
Item No.	Description	Equipment Cost	Material Cost	Labor		Bare Erected Cost	Eng'g CM H.O.& Fee	Contingencies		Total Plant Cost	
				Direct	Indirect			Process	Project	$/1,000	$/kW
9.3	Circulating Water System Auxiliaries	$16,683	$0	$2,201	$0	$18,884	$3,305	$0	$3,328	$25,518	$39
9.4	Circulating Water Piping	$0	$7,712	$6,984	$0	$14,697	$2,572	$0	$2,590	$19,859	$31
9.5	Make-up Water System	$1,280	$0	$1,644	$0	$2,924	$512	$0	$515	$3,951	$6
9.6	Component Cooling Water System	$1,202	$0	$922	$0	$2,124	$372	$0	$374	$2,870	$4
9.7	Circulating Water System Foundations	$0	$717	$1,191	$0	$1,908	$334	$0	$448	$2,690	$4
	Subtotal	**$42,124**	**$8,430**	**$19,371**	**$0**	**$69,924**	**$12,237**	**$0**	**$12,436**	**$94,597**	**$146**
10	Ash & Spent Sorbent Handling Systems										
10.6	Ash Storage Silos	$1,172	$0	$3,586	$0	$4,758	$833	$0	$839	$6,429	$10
10.7	Ash Transport & Feed Equipment	$3,986	$0	$3,952	$0	$7,937	$1,389	$0	$1,399	$10,725	$17
10.9	Ash/Spent Sorbent Foundation	$0	$815	$1,003	$0	$1,818	$318	$0	$427	$2,564	$4
	Subtotal	**$5,158**	**$815**	**$8,541**	**$0**	**$14,513**	**$2,540**	**$0**	**$2,665**	**$19,718**	**$30**
11	Accessory Electric Plant										
11.1	Generator Equipment	$2,671	$0	$2,015	$0	$4,686	$820	$0	$826	$6,332	$10
11.2	Station Service Equipment	$7,716	$0	$662	$0	$8,378	$1,466	$0	$1,477	$11,320	$17
11.3	Switchgear & Motor Control	$11,978	$0	$2,078	$0	$14,056	$2,460	$0	$2,477	$18,993	$29
11.4	Conduit & Cable Tray	$0	$1,557	$4,487	$0	$6,044	$1,058	$0	$1,065	$8,167	$13
11.5	Wire & Cable	$0	$4,124	$7,371	$0	$11,494	$2,012	$0	$2,026	$15,532	$24
11.6	Protective Equipment	$55	$0	$191	$0	$246	$43	$0	$43	$332	$1
11.7	Standby Equipment	$826	$0	$763	$0	$1,589	$278	$0	$280	$2,147	$3
11.8	Main Power Transformers	$7,010	$0	$143	$0	$7,153	$1,252	$0	$1,261	$9,665	$15
11.9	Electrical Foundations	$0	$223	$566	$0	$789	$138	$0	$185	$1,113	$2
	Subtotal	**$30,256**	**$5,903**	**$18,276**	**$0**	**$54,435**	**$9,526**	**$0**	**$9,641**	**$73,602**	**$113**
12	Instrumentation & Control										
12.1	Pulverized Coal Boiler Control Equipment	$809	$0	$144	$0	$954	$167	$0	$168	$1,289	$2
12.3	Steam Turbine Control Equipment	$725	$0	$81	$0	$806	$141	$0	$142	$1,089	$2
12.5	Signal Processing Equipment	$919	$0	$164	$0	$1,083	$189	$0	$191	$1,463	$2
12.6	Control Boards, Panels & Racks	$281	$0	$172	$0	$453	$79	$23	$83	$638	$1
12.7	Distributed Control System Equipment	$7,930	$0	$1,414	$0	$9,344	$1,635	$467	$1,717	$13,163	$20
12.8	Instrument Wiring & Tubing	$555	$444	$1,777	$0	$2,776	$486	$139	$510	$3,911	$6
12.9	Other Instrumentation & Controls Equipment	$683	$0	$1,581	$0	$2,263	$396	$113	$416	$3,189	$5
	Subtotal	**$11,903**	**$444**	**$5,332**	**$0**	**$17,679**	**$3,094**	**$742**	**$3,227**	**$24,742**	**$38**
13	Improvements to Site										
13.1	Site Preparation	$0	$470	$9,982	$0	$10,452	$1,829	$0	$2,456	$14,738	$23
13.2	Site Improvements	$0	$2,325	$3,072	$0	$5,397	$944	$0	$1,268	$7,609	$12
13.3	Site Facilities	$2,656	$0	$2,786	$0	$5,443	$952	$0	$1,279	$7,674	$12
	Subtotal	**$2,656**	**$2,795**	**$15,840**	**$0**	**$21,292**	**$3,726**	**$0**	**$5,004**	**$30,021**	**$46**

Case:	B12B	– SC PC w/ CO_2					Estimate Type:			Conceptual	
Plant Size (MW, net):	650						Cost Base:			Dec 2018	
Item No.	Description	Equipment Cost	Material Cost	Labor		Bare Erected Cost	Eng'g CM H.O.& Fee	Contingencies		Total Plant Cost	
				Direct	Indirect			Process	Project	$/1,000	$/kW
14	Buildings & Structures										
14.2	Boiler Building	$0	$11,598	$10,193	$0	$21,791	$3,813	$0	$3,841	$29,445	$45
14.3	Steam Turbine Building	$0	$16,121	$15,014	$0	$31,136	$5,449	$0	$5,488	$42,072	$65
14.4	Administration Building	$0	$1,047	$1,107	$0	$2,154	$377	$0	$380	$2,911	$4
14.5	Circulation Water Pumphouse	$0	$191	$152	$0	$343	$60	$0	$60	$464	$1
14.6	Water Treatment Buildings	$0	$475	$433	$0	$908	$159	$0	$160	$1,227	$2
14.7	Machine Shop	$0	$553	$371	$0	$923	$162	$0	$163	$1,247	$2
14.8	Warehouse	$0	$416	$416	$0	$832	$146	$0	$147	$1,124	$2
14.9	Other Buildings & Structures	$0	$290	$247	$0	$537	$94	$0	$95	$726	$1
14.10	Waste Treating Building & Structures	$0	$644	$1,951	$0	$2,595	$454	$0	$457	$3,507	$5
	Subtotal	**$0**	**$31,336**	**$29,884**	**$0**	**$61,220**	**$10,713**	**$0**	**$10,790**	**$82,723**	**$127**
	Total	**$984,403**	**$161,790**	**$592,945**	**$0**	**$1,739,137**	**$304,349**	**$80,193**	**$344,694**	**$2,468,373**	**$3,800**

Exhibit 4-75. Case B12B owner's costs

Description	$/1,000	$/kW
Pre-Production Costs		
6 Months All Labor	$14,349	$22
1 Month Maintenance Materials	$2,323	$4
1 Month Non-Fuel Consumables	$3,322	$5
1 Month Waste Disposal	$999	$2
25% of 1 Months Fuel Cost at 100% CF	$2,860	$4
2% of TPC	$49,367	$76
Total	**$73,221**	**$113**
Inventory Capital		
60-day supply of fuel and consumables at 100% CF	$28,700	$44
0.5% of TPC (spare parts)	$12,342	$19
Total	**$41,042**	**$63**
Other Costs		
Initial Cost for Catalyst and Chemicals	$2,612	$4
Land	$900	$1
Other Owner's Costs	$370,256	$570
Financing Costs	$66,646	$103
Total Overnight Costs (TOC)	**$3,023,051**	**$4,654**
TASC Multiplier (IOU, 35 year)	1.154	
Total As-Spent Cost (TASC)	**$3,489,846**	**$5,372**

Exhibit 4-76. Case B12B initial and annual operating and maintenance costs

Case:	B12B	– SC PC w/ CO_2			Cost Base:	Dec 2018
Plant Size (MW, net):	650	Heat Rate-net (Btu/kWh):		10,834	Capacity Factor (%):	85
Operating & Maintenance Labor						
Operating Labor				**Operating Labor Requirements per Shift**		
Operating Labor Rate (base):		38.50	**$/hour**	Skilled Operator:		2.0
Operating Labor Burden:		30.00	**% of base**	Operator:		11.3
Labor O-H Charge Rate:		25.00	**% of labor**	Foreman:		1.0
				Lab Techs, etc.:		2.0
				Total:		**16.3**
Fixed Operating Costs						
					Annual Cost	
					($)	**($/kW-net)**
Annual Operating Labor:					$7,161,008	$11.024
Maintenance Labor:					$15,797,590	$24.319
Administrative & Support Labor:					$5,739,649	$8.836
Property Taxes and Insurance:					$49,367,468	$75.997
Total:					**$78,065,715**	**$120.175**
Variable Operating Costs						
					($)	**($/MWh-net)**
Maintenance Material:					$23,696,385	$4.89906
Consumables						
	Initial Fill	**Per Day**	**Per Unit**	**Initial Fill**		
Water (/1000 gallons):	0	7,136	$1.90	$0	$4,206,523	$0.86967
Makeup and Waste Water Treatment Chemicals (ton):	0	21.3	$550.00	$0	$3,627,291	$0.74992
Brominated Activated Carbon (ton):	0	1.56	$1,600.00	$0	$772,686	$0.15975
Enhanced Hydrated Lime (ton):	0	39.9	$240.00	$0	$2,967,412	$0.61349
Limestone (ton):	0	700	$22.00	$0	$4,779,570	$0.98814
Ammonia (19 wt%, ton):	0.00	69.0	$300.00	0.00	$6,420,577	$1.32741
SCR Catalyst (ft^3):	17,414	15.9	$150.00	$2,612,120	$740,101	$0.15301
CO_2 Capture System Chemicals[A]	Proprietary				$9,225,455	$1.90730
Triethylene Glycol (gal):	w/equip.	544	$6.80	$0	$1,147,315	$0.23720
Subtotal:				**$2,612,120**	**$33,886,930**	**$7.00589**
Waste Disposal						
Fly Ash (ton)	0	657	$38.00	$0	$7,744,619	$1.60115
Bottom Ash (ton)	0	146	$38.00	$0	$1,720,404	$0.35568
SCR Catalyst (ft^3):	0	16	$2.50	$0	$12,335	$0.00255
Triethylene Glycol (gal):		544	$0.35	$0	$59,053	$0.01221
Thermal Reclaimer Unit Waste (ton)	0	3.51	$38.00	$0	$41,395	$0.00856
Prescrubber Blowdown Waste (ton)	0	52.1	$38.00	$0	$614,467	$0.12704
Subtotal:				**$0**	**$10,192,273**	**$2.10718**
By-Products						
Gypsum (ton)	0	1064	$0.00	$0	$0	$0.00000
Subtotal:				**$0**	**$0**	**$0.00000**
Variable Operating Costs Total:				**$2,612,120**	**$67,775,588**	**$14.01213**
Fuel Cost						
Illinois Number 6 (ton):	0	7,239	$51.96	$0	$116,691,765	$24.12521
Total:				**$0**	**$116,691,765**	**$24.12521**

[A]CO_2 Capture System Chemicals includes NaOH and Cansolv Solvent

Exhibit 4-77. Case B12B LCOE breakdown

Component	Value, $/MWh	Percentage
Capital	51.0	45%
Fixed	16.1	14%
Variable	14.0	12%
Fuel	24.1	21%
Total (Excluding T&S)	**105.3**	**N/A**
CO_2 T&S	8.9	8%
Total (Including T&S)	**114.3**	**N/A**

4.4 PC CASE SUMMARY

The performance and cost results of the four PC plant configurations are summarized in Exhibit 4-78.

Exhibit 4-78. Estimated performance and cost results for PC cases

	Pulverized Coal Boiler			
	SubC PC		SC PC	
	Case B11A	Case B11B	Case B12A	Case B12B
PERFORMANCE				
Nominal CO_2 Capture	**0%**	**90%**	**0%**	**90%**
Capacity Factor	**85%**	**85%**	**85%**	**85%**
Gross Power Output (MWe)	687	776	685	770
Auxiliary Power Requirement (MWe)	37	126	35	120
Net Power Output (MWe)	650	650	650	650
Coal Flow rate (lb/hr)	492,047	634,448	472,037	603,246
Natural Gas Flow rate (lb/hr)	N/A	N/A	N/A	N/A
HHV Thermal Input (kW_t)	1,682,291	2,169,156	1,613,879	2,062,478
Net Plant HHV Efficiency (%)	38.6%	30.0%	40.3%	31.5%
Net Plant HHV Heat Rate (Btu/kWh)	8,832	11,393	8,473	10,834
Raw Water Withdrawal, gpm	6,485	10,634	6,054	9,911
Process Water Discharge, gpm	1,334	3,090	1,242	2,893
Raw Water Consumption, gpm	5,151	7,544	4,811	7,018
CO_2 Emissions (lb/MMBtu)	202	20	202	20
CO_2 Emissions (lb/MWh-gross)	1,691	193	1,627	185
CO_2 Emissions (lb/MWh-net)	1,787	231	1,714	219
SO_2 Emissions (lb/MMBtu)	0.081	0.000	0.081	0.000
SO_2 Emissions (lb/MWh-gross)	0.674	0.000	0.648	0.000
NOx Emissions (lb/MMBtu)	0.084	0.073	0.087	0.077
NOx Emissions (lb/MWh-gross)	0.700	0.700	0.700	0.700
PM Emissions (lb/MMBtu)	0.011	0.009	0.011	0.010
PM Emissions (lb/MWh-gross)	0.090	0.090	0.090	0.090
Hg Emissions (lb/TBtu)	0.359	0.314	0.373	0.328
Hg Emissions (lb/MWh-gross)	3.00E-06	3.00E-06	3.00E-06	3.00E-06

	Pulverized Coal Boiler			
	SubC PC		SC PC	
	Case B11A	Case B11B	Case B12A	Case B12B
COST				
Total Plant Cost (2018$/kW)	2,011	3,756	2,099	3,800
Bare Erected Cost	1,482	2,641	1,548	2,677
Home Office Expenses	259	462	271	469
Project Contingency	269	526	280	531
Process Contingency	0	127	0	123
Total Overnight Cost (2018$/MM)	1,611	2,991	1,678	3,023
Total Overnight Cost (2018$/kW)	2,478	4,604	2,582	4,654
Owner's Costs	467	848	484	854
Total As-Spent Cost (2018$/kW)	2,861	5,315	2,981	5,372
LCOE ($/MWh) (excluding T&S)	63.9	106.3	64.4	105.3
Capital Costs	27.2	50.5	28.3	51.0
Fixed Costs	9.1	16.0	9.5	16.1
Variable Costs	7.9	14.5	7.7	14.0
Fuel Costs	19.7	25.4	18.9	24.1
LCOE ($/MWh) (including T&S)	63.9	115.7	64.4	114.3
CO_2 T&S Costs	N/A	9.4	N/A	8.9

The following observations can be made regarding plant performance:

- The addition of CO_2 capture and compression to the two PC cases results in an HHV efficiency penalty of 8.7 absolute percent (22.5 percent relative to non-capture) in the SubC PC case and 8.8 absolute percent (21.8 percent relative to non-capture) in the SC PC case. The efficiency is negatively impacted by the large auxiliary loads of the capture process and CO_2 compression, as well as the large increase in cooling water requirement, which increases the CWP and cooling tower fan auxiliary loads. The auxiliary load increases by 89 MW in the SubC PC case and by 85 MW in the SC PC case. In addition to the negative impact of the auxiliary load increase, steam is extracted prior to the LP section of the steam cycle for CO_2 capture solvent regeneration. The use of this steam in the reboiler, rather than passing through the LP steam turbine section and generating power, also contributes to the efficiency penalty.
- Since the PC cases utilized a wet FGD system, SO_2 emissions could be used as a surrogate for HCl. [24] Provided the SO_2 emissions limit is not exceeded, it can be assumed per the MATS regulation that the HCl emissions limit is also satisfied.
- The SO_2 emissions for non-capture cases are nearly identical, with the SubC PC emissions being higher than SC when normalized by gross output because of the lower HHV efficiency. The CO_2 capture process polishing scrubber and absorber vessel result in negligible SO_2 emissions in CO_2 capture cases.
- Uncontrolled CO_2 emissions on a mass basis are greater for SubC PC compared to SC because of the lower HHV efficiency. The capture cases result in a 90 percent reduction of carbon for both SubC and SC PC.

For the PC cases in this study, the FGD wastewater blowdown flow rate range to be treated by the SDE spans 55–74 gpm. The approximate performance impact of implementing the SDE across the four PC cases is a 0.25–0.27 percentage point (absolute) decrease in the HHV net plant efficiency. This is due primarily to the diversion of warm flue gas away from the air preheater and to the evaporator, with an additional minor impact resulting from the small auxiliary load required by the SDE.

The components of TOC and overall TASC are shown for each PC case in Exhibit 4-79.

Exhibit 4-79. Plant capital cost for PC cases

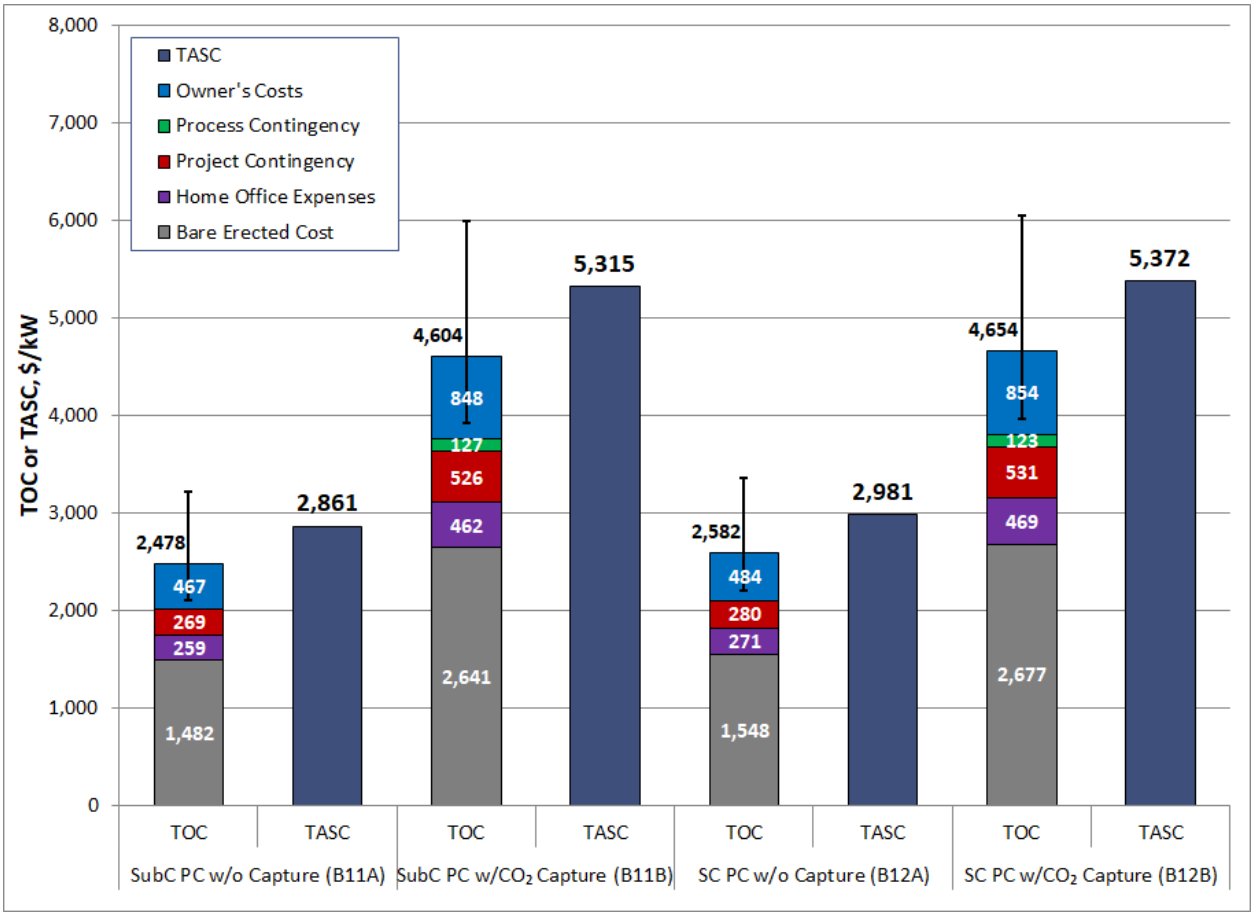

The PC capital cost estimate accuracy provides an AACE Class 4 range of -15 percent/+30 percent. The error bars included in Exhibit 4-79 represent the potential TOC range relative to the maximum and minimum of the capital cost uncertainty range.

The following observations about TOC can be made:

- The TOC of the non-capture SC PC case is approximately 4.2 percent greater than non-capture SubC PC. The TOC of SC PC with CO_2 capture is approximately 1.1 percent greater than SubC PC with CO_2 capture.

- The TOC penalty for adding CO_2 capture in the SubC case is 86 percent and is 80 percent in the SC case. In addition to the high cost of the capture process, there is a significant increase in the cost of the cooling towers and CWPs in the CO_2 capture cases because of the larger cooling water demand discussed previously. Also, the gross output of the two PC plants increases by 89 MW (SubC) and 85 MW (SC) to maintain the net output at 650 MW. The increased gross output results in higher coal flow rate and consequently higher costs for all cost accounts in the estimate.

The LCOE is shown for the four PC cases in Exhibit 4-80 (including T&S in the capture cases).

Exhibit 4-80. LCOE for PC cases

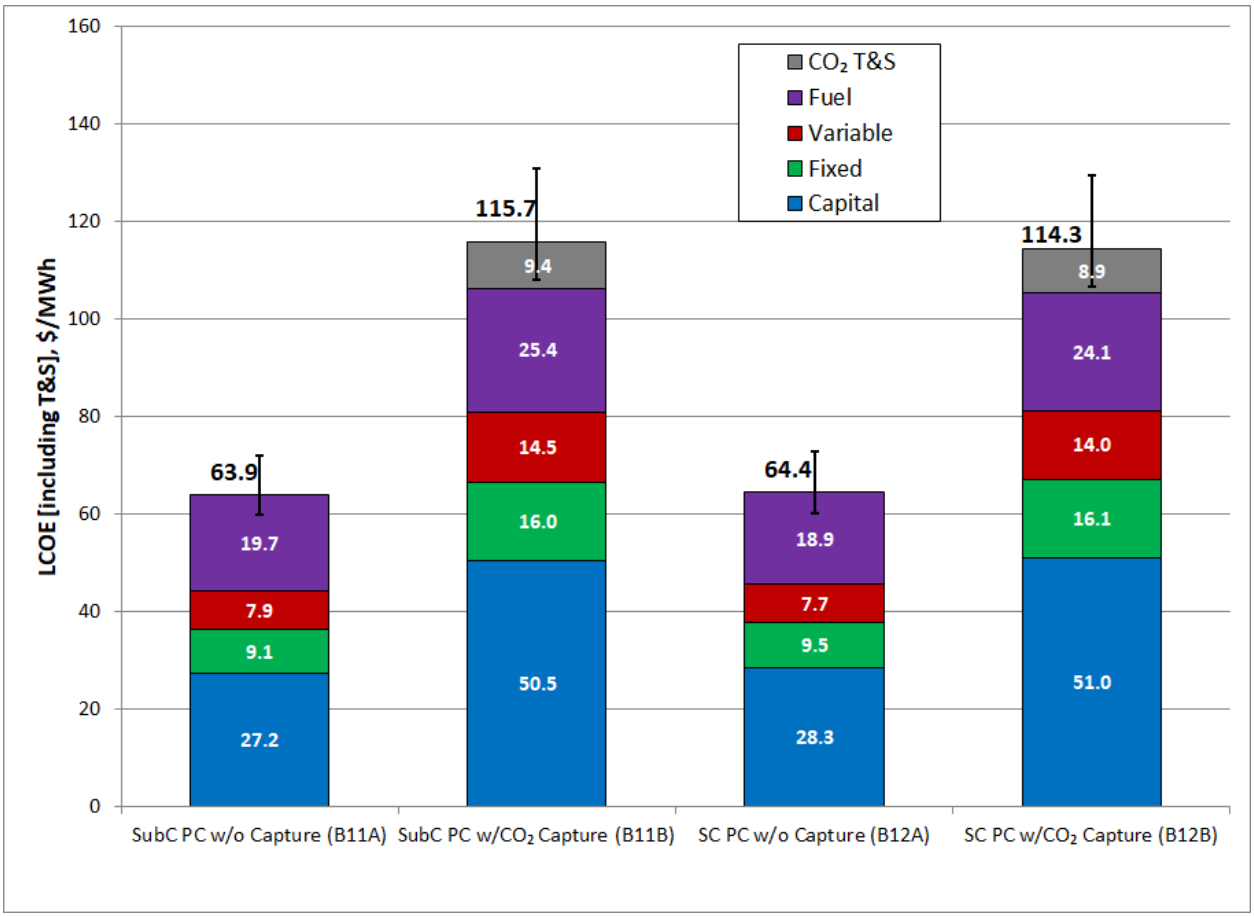

*Financial assumptions are presented in NETL's "QGESS: Cost Estimation Methodology for NETL Assessments of Power Plant Performance" [4]

Similar to Exhibit 4-79, the error bars included in Exhibit 4-80 represent the potential LCOE range relative to the maximum and minimum capital cost uncertainty ranges. The LCOE ranges presented are not reflective of other changes, such as variation in fuel price, labor price, CF, or other factors. As an example, if Case B12B's capital cost were determined to be at the high end of the uncertainty range (+30 percent), then the LCOE result would be $129.6/MWh. Conversely, if at the low end of the uncertainty range (-15 percent), the LCOE result would be $106.6/MWh.

The following observations can be made:

- Capital costs represent the largest fraction of LCOE in all cases, but particularly so in the CO_2 capture cases. Fuel cost is the second largest component of LCOE, and capital charges and fuel costs combined represent 71 to 73 percent of the total in all cases.
- In the non-capture cases, the slight increase in capital cost in the SC case is almost offset by the efficiency gain so that the LCOE for SC PC is only approximately 1.0 percent more than SubC despite having more than a 4 percent greater TOC.
- In the CO_2 capture cases, the increase in capital is even lower than in the non-capture case and is more than offset by the efficiency gain so that the LCOE for SC PC is approximately 1.0 percent lower than the SubC case, despite having a TOC that is approximately 1.0 percent greater.
- The LCOE of the non-capture SubC PC case and the non-capture SC PC case is well within the limits of the study accuracy. The same is true of the two CO_2 capture cases.

The sensitivity of LCOE to CF is shown in Exhibit 4-81. Implicit in the curves is the assumption that a CF of greater than 85 percent can be achieved without the expenditure of additional capital and capacity factors less than 85 percent don't result in lower capital or operating costs. The SubC and SC cases are nearly identical making it difficult to distinguish between the two lines. The LCOE increases slightly more rapidly at low CF because the relatively high capital component is spread over fewer kWh of generation.

Exhibit 4-81. Sensitivity of LCOE to capacity factor for PC cases

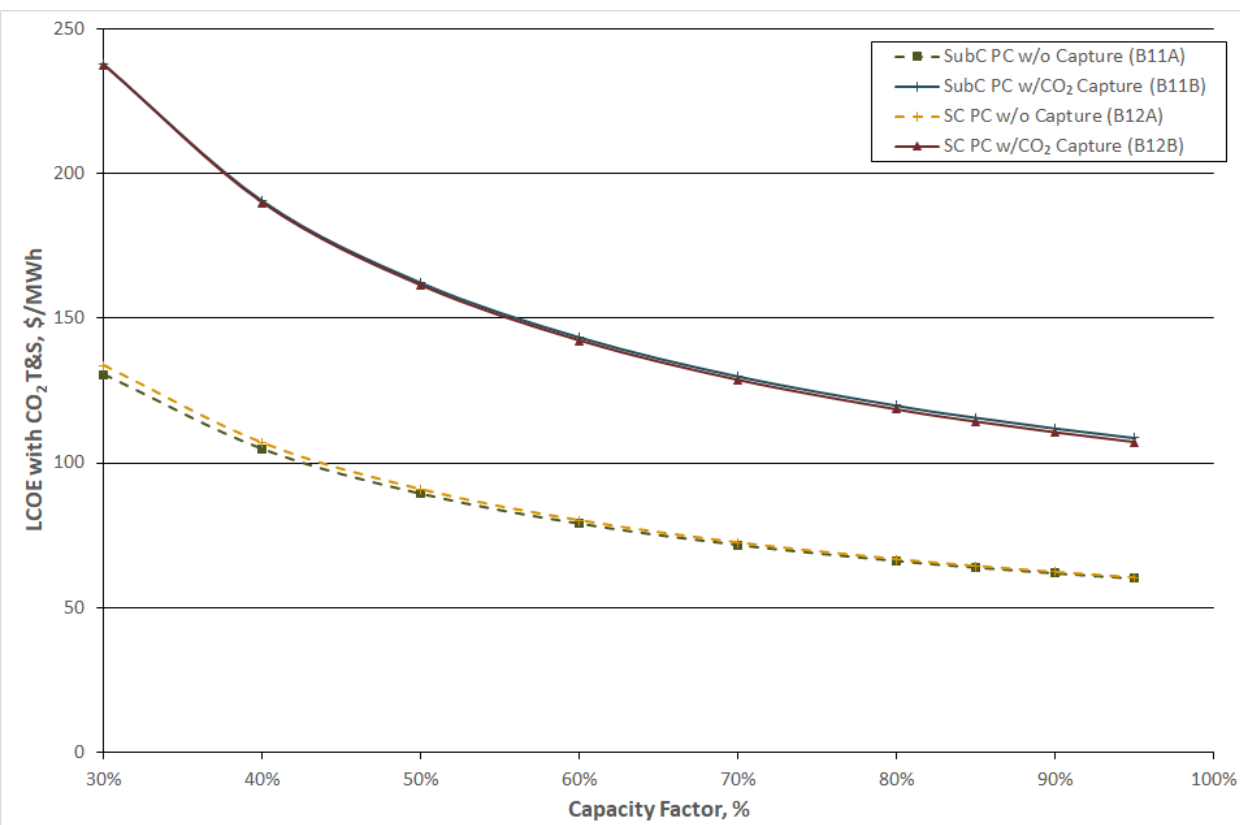

The sensitivity of LCOE to fuel costs for the PC cases is shown in Exhibit 4-82. A tripling of coal price from $2.11-6.34/GJ ($2.23–6.69/MMBtu) results in an approximate LCOE increase of about 60 percent in the non-capture cases and 43 percent in the CO_2 capture cases.

Exhibit 4-82. Sensitivity of LCOE to coal price for PC cases

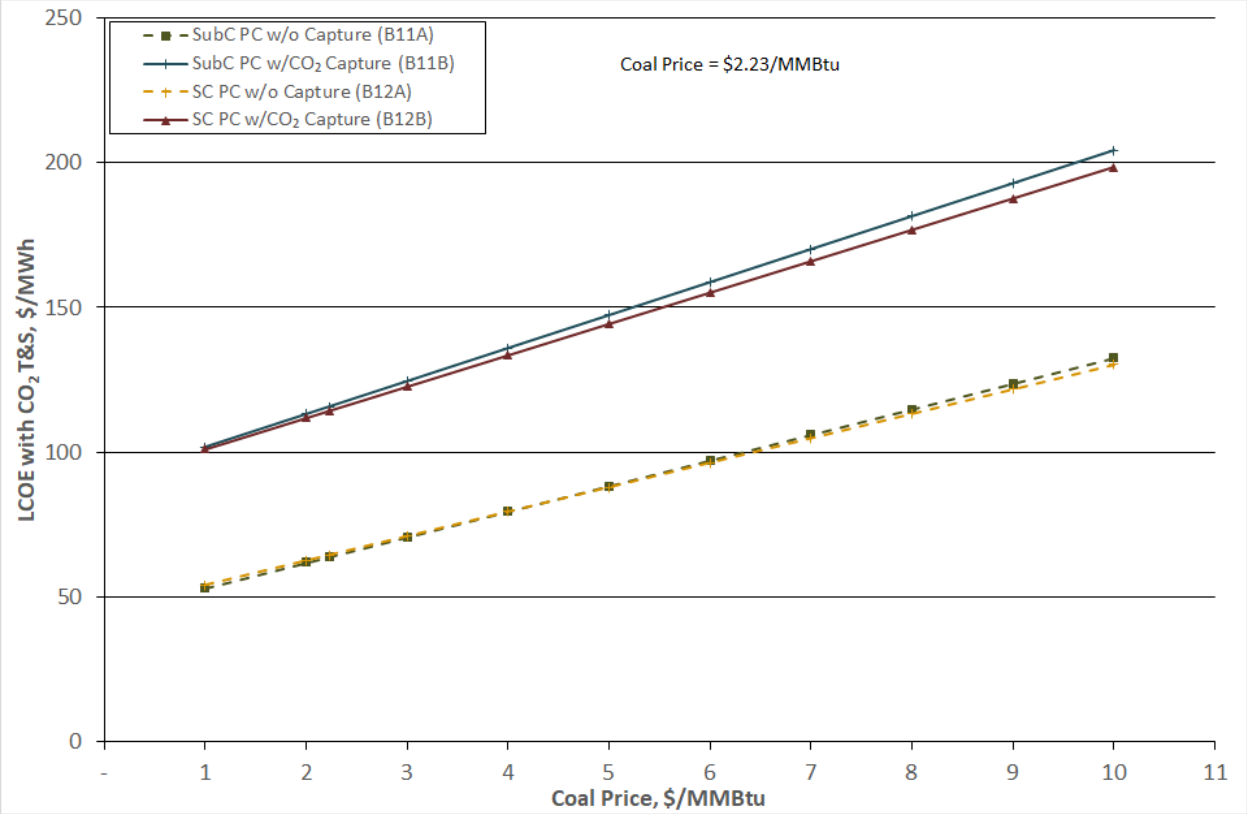

As presented in Section 2.7 the breakeven CO_2 sales price and emissions penalty were calculated and the results for the PC CO_2 capture cases—using SC PC as the non-capture reference case—are shown in Exhibit 4-83. The costs are nearly identical for the SubC and SC PC cases.

Exhibit 4-83. Breakeven CO_2 sales price and emissions penalty in PC cases

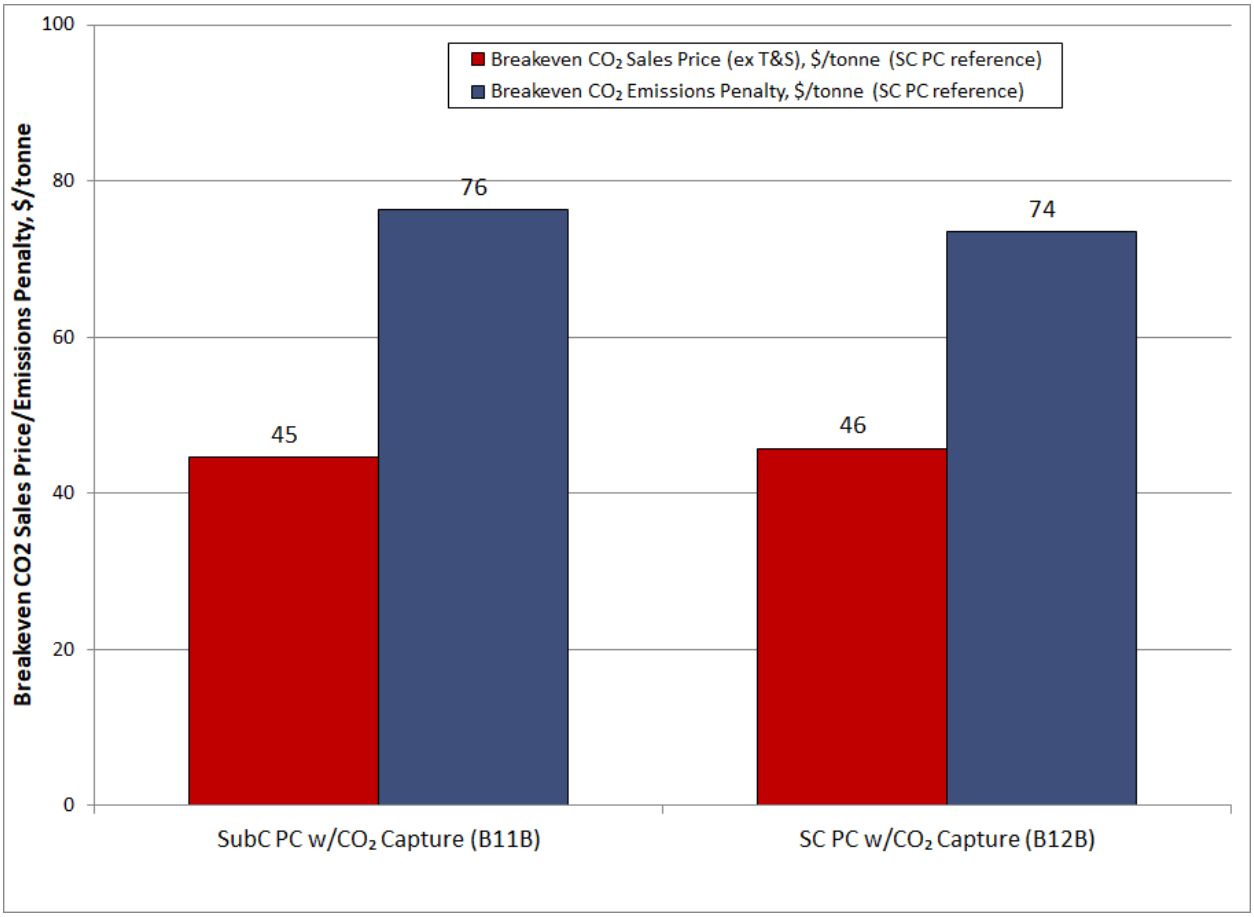

The normalized water withdrawal, process discharge and raw water consumption are shown in Exhibit 4-84 for each of the PC cases.

Exhibit 4-84. Raw water withdrawal and consumption in PC cases

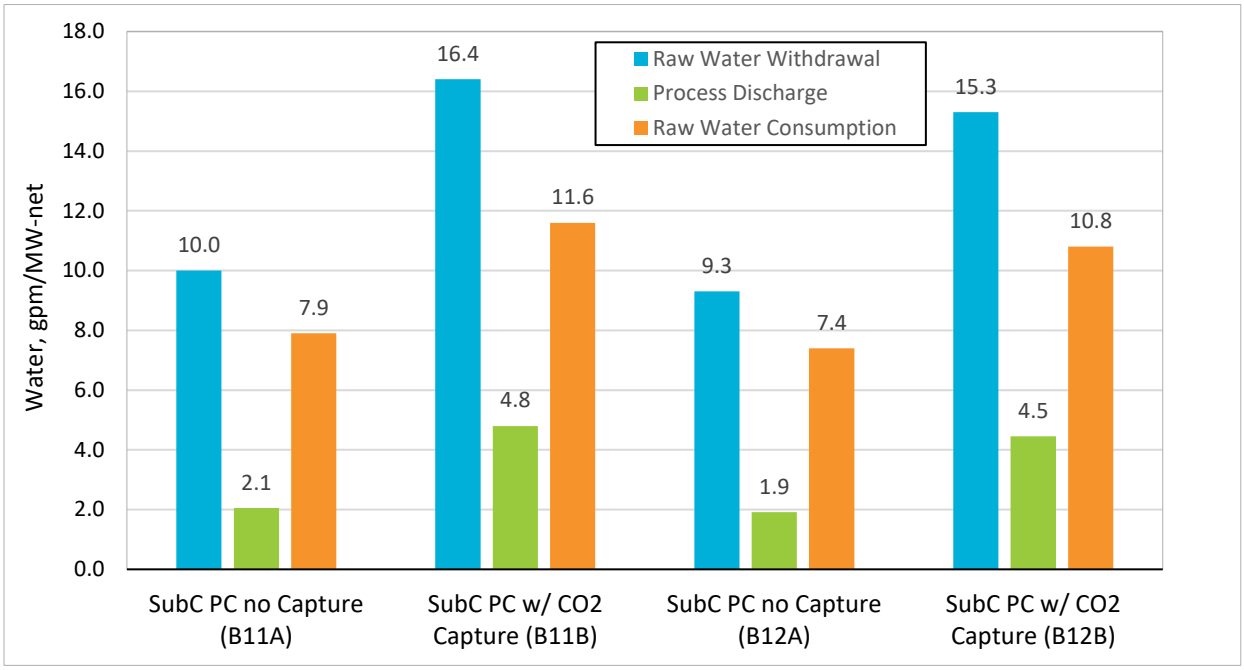

Raw water consumption for all cases is dominated by cooling tower makeup requirements, which accounts for about 89 percent of raw water in non-capture cases and 99 percent of raw water in CO_2 capture cases. The amount of raw water consumption in the CO_2 capture cases is greatly increased by the cooling water requirements of the capture process. Cooling water is required to:

- Reduce the flue gas temperature from 57°C (134°F) (FGD exit temperature) to 30°C (86°F) (CO_2 absorber operating temperature), which also requires condensing water from the flue gas that comes saturated from the FGD unit
- Remove the heat input by the stripping steam to cool the solvent
- Remove the heat input from the auxiliary electric loads
- Remove heat in the CO_2 compressor intercoolers
- Cool the CO_2 product stream exiting the CO_2 compressor to the target specification of 30°C (86°F)

In the CO_2 capture cases, additional water is recovered from the flue gas as it is cooled to the absorber temperature. A portion of this water is used as FGD makeup, and the remainder is discharged.

NATURAL GAS COMBINED CYCLE PLANTS

5 NATURAL GAS COMBINED CYCLE PLANTS

Two NGCC power plant configurations were evaluated and are presented in this section. Each design is based on a market-ready technology that is assumed to be commercially available at the time the project commences. Each design consists of two state-of-the-art 2017 F-class CTGs, two HRSGs, and one STG in a multi-shaft 2x2x1 configuration.

The NGCC cases are evaluated with and without CO_2 capture on a common thermal input basis. The NGCC design that includes CDR has a smaller plant net output resulting from the additional CDR facility and CO_2 compressors auxiliary loads. The gross output of the NGCC cases was largely governed by the characteristic output of the commercially available CT. Hence, evaluation of the two NGCC designs on a common net output basis was not practicable.

The Rankine cycle portion of both designs uses a single reheat 16.5 MPa/585°C/585°C (2,393 psia/1,085°F/1,085°F) SubC steam cycle. A more aggressive steam cycle was considered but not chosen because there are very few HRSGs in operation that would support such conditions and doing so would have limited the applicability of the NGCC plant cases in the marketplace. [104]

5.1 NGCC PROCESS AREAS

The two NGCC cases are nearly identical in configuration with the exception that Case B31B includes CO_2 capture while Case B31A does not. The process areas that are common to the two plant configurations are presented in this section.

5.1.1 Natural Gas Supply System

It was assumed that a natural gas main with adequate capacity is near to the site fence line (within 16 km [10 mi]) and that a suitable right-of-way is available to install a branch line to the site. For the purposes of this report, it was also assumed that the gas will be delivered to the plant custody transfer point at sufficient pressure such that natural gas is available at the turbine inlet at 2.9 MPa (415 psig) and 27°C (80°F), which matches the state-of-the-art 2017 F-class fuel system requirements. Hence, neither a pressure reducing station, nor a fuel booster compressor is required.

As discussed in Section 2.3, it was assumed that the natural gas has an added mercaptan composition of 5.75×10^{-6} mol%. [14]

A new gas metering station is assumed to be added on the site, adjacent to the new CT. The meter may be of the rate-of-flow type, with input to the plant computer for summing and recording or may be of the positive displacement type. In either case, a complete timeline record of gas consumption rates and cumulative consumption is provided.

5.1.2 Combustion Turbine

The combined cycle plant is based on two CTGs. The CTG is representative of the state-of-the-art 2017 F-class turbines with an ISO base rating of 238 MW when firing natural gas. [25] This

machine is an axial flow, single spool, constant speed unit, with variable IGVs, and dry low NOx combustion system.

Each CTG is provided with inlet air filtration systems, inlet silencers, lube and control oil systems including cooling, electric motor starting systems, acoustical enclosures including heating and ventilation, control systems including supervisory, fire protection, and fuel systems. No back up fuel was envisioned for these cases.

The CTG is typically supplied in several fully shop-fabricated modules, complete with all mechanical, electrical, and control systems required for CTG operation. Site CTG installation involves module interconnection and linking CTG modules to the plant systems. The CTG package scope of supply for combined cycle application, while project specific, does not vary much from project-to-project. A typical scope of supply is presented in Exhibit 5-1.

Exhibit 5-1. Combustion turbine typical scope of supply

System	System Scope
ENGINE ASSEMBLY	Coupling to Generator, Water Mist Fire Protection System, Insulation Blankets, Platforms, Stairs and Ladders
Engine Assembly with Bedplate	Variable Inlet Guide Vane System, Compressor, Bleed System, Purge Air System, Bearing Seal Air System, Combustors, Turbine Rotor Cooler
Walk-in acoustical enclosure	HVAC, Lighting, and Water Mist Fire Protection System
MECHANICAL PACKAGE	HVAC, Lighting, Air Compressor for Pneumatic System, Fire Protection Systems
Lubricating Oil System and Control Oil System	Lube Oil Reservoir, Accumulators, 2x100% AC Driven Oil Pumps, DC Emergency Oil Pump with Starter, 2x100% Oil Coolers, Duplex Oil Filter, Oil Temperature and Pressure Control Valves, Oil Vapor Exhaust Fans and Demister, Oil Heaters, Oil Interconnect Piping (SS and CS), Oil System Instrumentation
ELECTRICAL PACKAGE	HVAC, Lighting, AC and DC Motor Control Centers, Generator Voltage Regulating Cabinet, Generator Protective Relay Cabinet, DC Distribution Panel, Battery Charger, Digital Control System with Local Control Panel (all control and monitoring functions as well as data logger and sequence of events recorder), Control System Valves and Instrumentation Communication link for interface with plant DCS Supervisory System, Bentley Nevada Vibration Monitoring System, FM-200 Fire Protection System, Cable Tray and Conduit, Provisions for Performance Testing including Test Ports, Thermowells, Instrumentation and DCS interface cards
INLET AND EXHAUST SYSTEMS	Inlet Duct Trash Screens, Inlet Duct and Silencers, Self-Cleaning Filters, Hoist System for Filter Maintenance, Evaporative Cooler System, Exhaust Duct Expansion Joint, Inlet Silencer and Exhaust Acoustic Treatment, Pressure and Temperature Ports and Instrumentation
NG FUEL SYSTEM	Gas Valves Including Vent, Throttle and Trip Valves, Gas Filter/Separator, Gas Supply Instruments and Instrument Panel
STARTING SYSTEM	Enclosure, Static Start System, Turning Gear, and Clutch Assembly
GENERATOR	Static Exciter and Excitation Transformer, Line Termination Enclosure with CTs, VTs, Surge Arrestors, and Surge Capacitors, Neutral Cubicle with CT, Neutral Tie Bus, Grounding Transformer and Secondary Resistor, Generator Gas Dryer, Seal Oil System (including Defoaming Tank, Reservoir, Seal Oil Pump, Emergency Seal Oil Pump, Vapor Extractor, and

System	System Scope
	Oil Mist Eliminator), Generator Auxiliaries Control Enclosure, Grounding System Connectors
Generator Cooling	Hydrogen Cooling System (including H_2 to Glycol and Glycol to Air Heat Exchangers, Liquid Level Detector Circulation System, Interconnecting Piping and Controls)
MISCELLANEOUS	Interconnecting Pipe, Wire, Tubing and Cable Instrument Air System Including Air Dryer On Line and Off Line Water Wash System LP CO_2 Storage Tank Drain System Drain Tanks Coupling, Coupling Cover, and Associated Hardware

Electrical generators are provided with the CT package. The generators are assumed to be 18 kV, 3-phase, 60 Hz, constructed to meet American National Standards Institute (ANSI) and National Electrical Manufacturers Association (NEMA) standards for turbine-driven synchronous generators. The generator is H_2 cooled, complete with excitation system, cooling, and protective relaying.

5.1.2.1 Combustion Turbine Frame Comparison

The current combustion turbine market for natural gas applications offers multiple frame size options, supplied by several different OEMs. In general, the frame class (e.g., F-class) is delineated by combustion turbine output. Advanced-class combustion turbines, such as the H- or J-class will have higher outputs, and higher efficiencies, than the F-class. Exhibit 5-2 below compares parameter values for currently-offered F- and H-class combustion turbines, both for simple cycle and 2x1 combined cycle configurations. [122] [123] [124]

Exhibit 5-2. F- versus H-class combustion turbines

Parameter	F-Class	H-Class
Simple Cycle		
Combustion Turbine Net Output (Nominal), MW	243	384
Combustion Turbine Net Efficiency (LHV), %	39.8	42.6
Turbine Inlet Temperature, °F	2,300-2,600	>2,600
2x1 Combined Cycle Configuration		
Combined Cycle Net Output, MW	756	1,148
Combined Cycle Net Efficiency (LHV), %	60.4	63.6
Plant Turndown – Minimum Load, %	22.0	15.0
Ramp Rate, MW/min	80	120
Startup Time (RR Hot), min	25	<30

The H-class nominal net output, in a 2x1 combined cycle configuration, can offer approximately an additional 400 MW in net output, while also providing three or more additional net plant efficiency percentage points (absolute, LHV) as compared to the F-class. Flexible operation capabilities can also be enhanced for advanced class options.

As is stated throughout this report, the objective of the cases presented is to provide a consistent and transparent analysis methodology that is robust enough to allow for technology comparison on an equivalent basis. One of the mechanisms to facilitate comparison is to consider plants on a comparable net electrical output basis. The PC cases presented in Section 4 consider a fixed 650 MW net output, which is a 100 MW increase from prior revisions of this report. This was selected to maintain comparability with both NGCC cases (specifically NGCC with CO_2 capture), as well as IGCC cases. As discussed in Section 3.1.9.1 previously, there has been little development in syngas-capable combustion turbines; therefore, there is currently no offering that could increase IGCC net electrical output to meet the significantly higher output of the H-frame combustion turbine. Alternate configurations were considered (e.g., 1x1 combined cycle for NGCC; 3x1 combined cycle for IGCC), but it was determined that maintaining system configuration across report revisions provided an additional layer of consistency for technology comparison. Given the net electrical output comparison point, the F-frame was again selected for inclusion in NGCC cases. It is acknowledged that larger output, higher efficiency machines are deployed and currently operating in the market today, and future power projects will increasingly pursue these advanced combustion turbine technologies.

5.1.3 Heat Recovery Steam Generator

The HRSG is configured with HP, IP, and LP steam drums, and superheater, reheater, evaporator, and economizer sections. The HP drum is supplied with FW by the HP boiler feed pump to generate HP steam, which passes to the superheater section for heating to 585°C (1,085°F). The IP drum is supplied with FW by an interstage bleed from the HP boiler feed pump. The IP steam is mixed with the HP turbine exhaust before being reheated to 585°C (1,085°F). The combined flows are admitted into the IP section of the steam turbine. The LP drum provides steam to the LP turbine.

The HRSG tubes typically comprise finned tubing. The high-temperature portions are type P91, P92, or P22 ferritic alloy material; the low-temperature portions (less than 399°C [750°F]) are CS. Each HRSG exhausts directly to the stack, which is fabricated from CS plate materials and epoxy coated. The stack for the NGCC cases is assumed to be 46 m (150 ft) high, and the cost is included in the HRSG account.

5.1.4 NOx Control System

Two measures are taken to reduce the NOx. The first is a DLN burner in the CTG. The DLN burners reduce the emissions to about 9 ppmvd [25] (assumed to be 100 percent NO and referenced to 15 percent O_2).

While a state-of-the-art 2017 F-class CT alone produces NOx emissions below the limits described in Section 2.4.3.3, an SCR was included as a second measure to ensure the plant met EPA's PSD program by installing the BACT. The SCR unit cost accounts for less than 1 percent of the overall TPC for both capture and non-capture cases.

An SCR reactor uses NH_3 and a catalyst to reduce NOx to N_2 and H_2O. The SCR system consists of a reactor, and NH_3 supply and storage system. The SCR system is designed for 90 percent reduction while firing natural gas. [26]

Operation Description – The SCR reactor is in the flue gas path inside the HRSG between the HP and IP sections. The SCR reactor is equipped with one catalyst layer consisting of catalyst modules stacked in line on a supporting structural frame. The SCR reactor has space for installation of an additional layer. NH_3 is injected into the gas immediately prior to it entering the SCR reactor. The NH_3 injection grid is arranged into several sections and consists of multiple pipes with nozzles. The NH_3 flow rate into each injection grid section is controlled considering imbalances in the flue gas flow distribution across the HRSG. The catalyst contained in the reactor greatly accelerates the reaction between the NH_3 and the NOx in the gas. The catalyst consists of various active materials such as titanium dioxide, vanadium pentoxide, and tungsten trioxide. The optimum inlet flue gas temperature range for the catalyst is 260°C (500°F) to 371°C (700°F).

The NH_3 storage and injection system consists of unloading facilities, bulk storage tank, vaporizers, and dilution air skid.

5.1.5 Carbon Dioxide Recovery Facility

A CDR facility is used in Case B31B to remove 90 percent of the CO_2 in the flue gas exiting the HRSG, purify it, and compress it to a SC condition. It is assumed that all the carbon in the natural gas is converted to CO_2. The CDR comprises flue gas supply, CO_2 absorption, solvent stripping and reclaiming, and CO_2 compression and drying.

The CO_2 absorption/stripping/solvent reclamation process designed for NGCC cases, such as Case B31B, is based on the Cansolv system, previously described in Section 4.1.8 for the PC-specific application, but with the following differences:

- The PC and NGCC cases consider different Cansolv solvents, which are tailored to the target application. The NGCC solvent provides increased reactivity in the low CO_2 content NGCC flue gas environment. This is feasible given the lack of solvent contaminants (i.e. sulfur) present in the NGCC flue gas stream.
- No SO_2 polishing step is required in the NGCC case, as the pipeline natural gas sulfur content produces a flue gas with an SO_2 content below the concentration in the outlet of the polishing scrubber used in the PC cases.
- No absorber inter-stage solvent cooling is employed in the NGCC case.
- No lean solvent flash or vapor recovery, compression, and reinjection is employed in the NGCC case.
- Solvent reclaiming considers an additional purification step, beyond thermal reclaiming, for NGCC cases as compared to PC cases. In addition to the thermal reclaimer, an Ion Exchange reclaimer is also applied in the amine purification section. The acids formed by the oxidative degradation of the amine, as well as through reactions with NO_2 and SO_2 (HSS), neutralize a portion of the amine making it inactive to further CO_2 absorption. Therefore, excess HSS are removed via an ion exchange (resin bed contained within a column) before continuing to the thermal reclaimer.

- For the steady-state case described here, the low-pressure steam requirement for the reboiler only is calculated as approximately 2.9 MJ/kg (1,250 Btu/lb) CO_2 for the Cansolv process.

A diagram of the Cansolv CO_2 capture process for the NGCC application is provided in Exhibit 5-3.

Exhibit 5-3. Cansolv CO_2 capture process typical flow diagram for NGCC

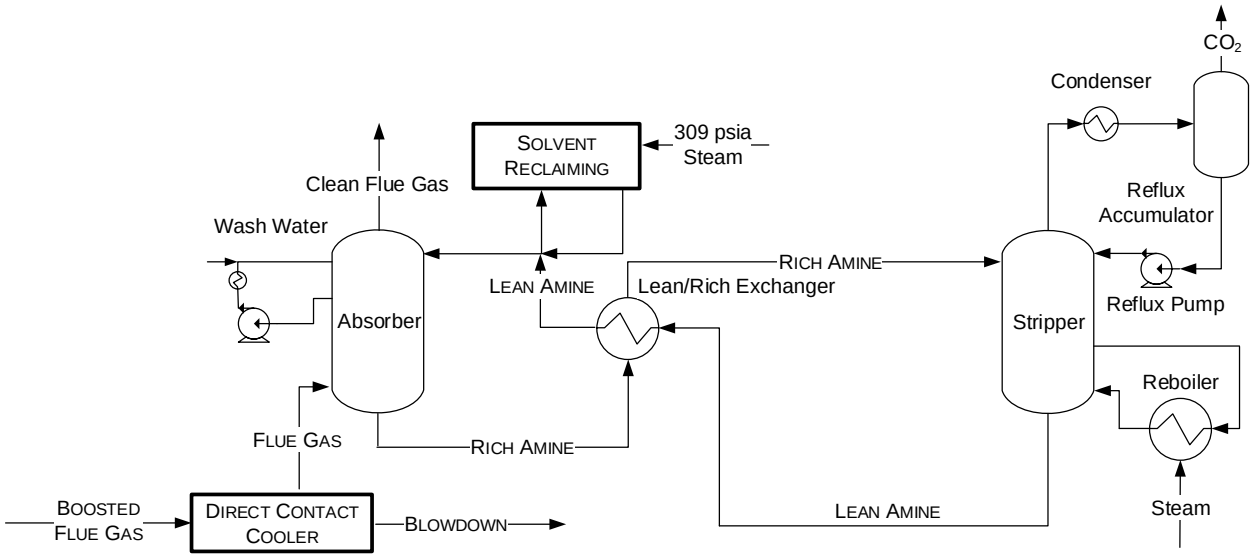

Due to the larger volumetric flow rate in the NGCC case compared to the PC cases (4.3 million m^3/hr [153 million ft^3/hr] in Case B31B and 3.2 million m^3/hr [112 million ft^3/hr] in Case B12B) and the low CO_2 concentration (4.1 mol% in Case B31B and 12.5 mol% in Case B12B), the natural gas case requires a CO_2 absorber approximately 2 times the volume of the coal cases. However, as a result of the lower CO_2 content, the CO_2 stripper used in Case B31B is only 38 percent of the volume of the stripper used in Case B12B.

The Cansolv system in the NGCC case discharges CO_2 at the same temperature and pressure as that in the PC cases; as such, the enthalpy versus pressure operating profile presented for PC cases in Exhibit 4-12 in Section 4.1.9 is also representative of the CO_2 compressor for the NGCC case with capture.

5.1.6 Steam Turbine

The steam turbine consists of an HP section, an IP section, and a double-flow LP section, all connected to the generator by a common shaft. The HP and IP sections are contained in a single span, opposed-flow casing, with the double-flow LP section in a separate casing.

Main steam from the boiler passes through the stop valves and control valves and enters the turbine at the conditions provided in Exhibit 5-4.

Exhibit 5-4. NGCC steam conditions

Steam Conditions	
Steam Parameter	**NGCC**
Main Pressure, MPa (psig)	16.5 (2,393)
Main Temperature, °C (°F)	585 (1,085)
Reheat Pressure, MPa (psig)	3.5 (509)
Reheat Temperature, °C (°F)	585 (1,085)

The steam initially enters the turbine near the middle of the HP span, flows through the turbine, and is combined with steam from the IP superheater before being returned to the HRSG for reheating. The reheat steam flows through the reheat stop valves and intercept valves and enters the IP section at the conditions provided in Exhibit 5-4. After passing through the IP section, the steam enters a crossover pipe, which transports the steam to the LP section. A branch line equipped with combined stop/intercept valves conveys LP steam from the HRSG LP drum to a tie-in at the crossover line. The steam divides into two paths and flows through the LP sections exhausting downward into the condenser.

Turbine bearings are lubricated by a closed-loop, water-cooled pressurized oil system. Turbine shafts are sealed against air in-leakage or steam blowout using a modern positive pressure variable clearance shaft sealing design arrangement connected to a LP steam seal system. The open-air-cooled generator produces power at 18 kV. A static, transformer type exciter is provided. The STG is controlled by a triple-redundant microprocessor-based electro-hydraulic control system. The system provides digital control of the unit in accordance with programmed control algorithms, color monitor/operator interfacing, and datalink interfaces to the balance-of-plant DCS and incorporates on-line repair capability.

5.1.7 Water and Steam Systems

5.1.7.1 Condensate

The function of the condensate system is to pump condensate from the condenser's deaerating hotwell through the gland steam condenser and the low-temperature economizer section in the HRSG.

The system consists of one main condenser; two 100 percent capacity, motor-driven vertical multistage condensate pumps (total of two pumps for the plant), one gland steam condenser, condenser air removal vacuum pumps, condensate polisher, and a low-temperature tube bundle in the HRSG.

Condensate is delivered to a common discharge header through two separate pump discharge lines, each with a check valve and a gate valve. A common minimum flow recirculation line discharging to the condenser is provided to maintain minimum flow requirements for the gland steam condenser and the condensate pumps.

5.1.7.2 Feedwater

The function of the FW system is to pump the various FW streams from the LP evaporator to the respective steam drums. Two 100 percent capacity motor-driven feed pumps are provided per each HRSG (total of four pumps for the plant). The FW pumps are equipped with an interstage takeoff to provide IP FW. Each pump is provided with inlet and outlet isolation valves, outlet check valves, and individual minimum flow recirculation lines discharging back to the LP drum. The recirculation flow is controlled by automatic or pneumatic flow control valves. In addition, the suctions of the boiler feed pumps are equipped with strainers.

5.1.7.3 Steam System

Main, intermediate, and low-pressure steam exits the HRSG superheater section through motor-operated stop/check valves and motor-operated gate valves. The main steam is routed to the HP turbine stop valve. The intermediate steam is combined with the HP turbine exhaust and is conveyed through a motor-operated isolation gate valve to the HRSG reheater and from the HRSG reheater outlet through a motor-operated gate valve to the IP turbines. The LP steam is combined with the IP turbine exhaust and is conveyed through a motor-operated isolation gate valve to the LP turbines.

5.1.7.4 Circulating Water System

The function of the CWS is to supply cooling water to condense the main turbine exhaust steam, for the auxiliary cooling system, and for the CDR facility in Case B31B. The system consists of two 50 percent capacity vertical CWPs (total of two pumps for the plant), a mechanical draft evaporative cooling tower, and interconnecting piping. The condenser is a two pass, horizontal type with divided water boxes. There are two separate circulating water circuits in each box. One-half of the condenser can be removed from service for cleaning or plugging tubes. This can be done during normal operation at reduced load.

The auxiliary cooling system is a CL system. Plate and frame HXs with circulating water as the cooling medium are provided. The system provides cooling water to the following systems:

1. CTG lube oil coolers
2. CTG air coolers
3. STG lube oil coolers
4. STG H_2 coolers
5. BFW pumps
6. Air compressors
7. Generator seal oil coolers (as applicable)
8. Sample room chillers
9. Blowdown coolers
10. Condensate extraction pump-motor coolers

The CDR system in Case B31B requires a substantial amount of cooling water that is provided by the NGCC plant CWS. The additional cooling load imposed by the CDR is reflected in the significantly larger CWPs and cooling tower in that case.

5.1.7.5 Buildings and Structures

Structures assumed for NGCC cases can be summarized as follows:

1. Generation Building housing the STG
2. CWP House
3. Administration/Office/Control Room/Maintenance Building
4. Water Treatment Building
5. Fire Water Pump House

5.1.8 Accessory Electric Plant

The accessory electric plant consists of all switchgear and control equipment, generator equipment, station service equipment, conduit and cable trays, wire, and cable. It also includes the main transformer, required foundations, and standby equipment.

5.1.9 Waste Treatment/Miscellaneous Systems

An onsite water treatment facility treats all runoff, cleaning wastes, blowdown, and backwash. It is anticipated that the treated water will be suitable for discharge into existing systems and be within EPA standards for suspended solids, oil and grease, pH, and miscellaneous metals.

The waste treatment system is minimal and consists, primarily, of neutralization and oil/water separators (along with the associated pumps, piping, etc.).

Miscellaneous systems consisting of service air, instrument air, and service water are provided. All truck roadways and unloading stations inside the fence area are provided.

5.1.10 Instrumentation and Control

An integrated plant-wide DCS is provided. The DCS is a redundant microprocessor-based, functionally distributed system. The control room houses an array of video monitors and keyboard units. The monitor/keyboard units are the primary interface between the generating process and operations personnel. The DCS incorporates plant monitoring and control functions for all the major plant equipment. The DCS is designed to provide 99.5 percent availability.

The plant equipment and the DCS are designed for automatic response to load changes from minimum load to 100 percent. Startup and shutdown routines are implemented as supervised manual procedures, with operator selection of modular automation routines available.

5.1.11 Performance Summary Metrics

This section details the methods used to calculate several metrics reported in the performance summaries of the NGCC cases.

5.1.11.1 Combustion Turbine Efficiency

The combustion turbine efficiency is calculated by taking the CT power produced and dividing it by the thermal input to the turbines. This calculation is represented by the equation:

$$CTE = \frac{CTP}{TI}$$

Where:

CTE – combustion turbine efficiency

CTP – combustion turbine power, after generator losses

TI – thermal input to turbines

The thermal input is calculated by taking the natural gas feed rate and multiplying it by the heating value of the natural gas and converting the units to kW.

5.1.11.2 Steam Turbine Efficiency

The steam turbine efficiency is calculated by taking the steam turbine power produced and dividing it by the difference between the thermal input and thermal consumption. This calculation is represented by the equation:

$$STE = \frac{STP}{(TI - TC)}$$

Where:

STE – steam turbine efficiency

STP – steam turbine power, after generator losses

TI – thermal input

TC – thermal consumption

The thermal input is calculated by taking the enthalpy of the flue gas to the HRSG and subtracting the enthalpy of the flue gas exiting the HRSG.

Thermal consumption is only present in the capture cases. It is the enthalpy difference between the streams extracted for the capture and CO_2 dryer systems and the condensate returned to the condenser (steam extraction – condensate return).

5.1.11.3 Steam Turbine Heat Rate

The steam turbine heat rate is calculated by taking the inverse of the steam turbine efficiency. This calculation is represented by the equation:

$$STHR = \frac{1}{STE} * 3{,}412$$

Where:

STHR – steam turbine heat rate, Btu/kWh

STE – steam turbine efficiency, fraction

5.2 NGCC Cases

This section contains an evaluation of plant designs for cases B31A and B31B. The balance of this section is organized as follows:

- Key System Assumptions is a summary of study and modeling assumptions relevant to cases B31A and B31B.
- Sparing Philosophy is provided for both cases B31A and B31B.
- Process and System Description provides an overview of the technology operation as applied to Case B31A. The systems that are common to all NGCC cases were covered in Section 5.1 and only features that are unique to Case B31A are discussed further in this section.
- Performance Results provides the main modeling results from Case B31A, including the performance summary, environmental performance, carbon balance, water balance, mass and energy balance diagrams, and energy balance table.
- Equipment List provides an itemized list of major equipment for Case B31A with account codes that correspond to the cost accounts in the Cost Estimates section.
- Cost Estimates provides a summary of capital and operating costs for Case B31A.
- Process and System Description, Performance Results, Equipment List and Cost Estimates are reported for Case B31B.

5.2.1 Key System Assumptions

System assumptions for cases B31A and B31B, NGCC with and without CO_2 capture, are compiled in Exhibit 5-5.

Exhibit 5-5. NGCC plant study configuration matrix

	Case B31A w/o CO_2 Capture	Case B31B w/CO_2 Capture
Steam Cycle, MPa/°C/°C (psig/°F/°F)	16.4/585/585 (2,378/1,085/1,085)	
Fuel	Natural Gas	
Fuel Pressure at Plant Battery Limit MPa (psia)	3.0 (430)	
Condenser Pressure, mm Hg (in. Hg)	50.8 (2)	
Cooling Water to Condenser, °C (°F)	16 (60)	
Cooling Water from Condenser, °C (°F)	27 (80)	

	Case B31A w/o CO_2 Capture	Case B31B w/CO_2 Capture
Stack Temperature, °C (°F)	82 (181)	31 (87)
SO_2 Control	Low Sulfur Fuel	
NOx Control	LNB and SCR	
SCR Efficiency, %[A]	85.4	86.7
Ammonia Slip (End of Catalyst Life), ppmv	10	
Particulate Control	N/A	
Mercury Control	N/A	
CO_2 Control	N/A	Cansolv
Overall Carbon Capture[A]	N/A	90%
CO_2 Sequestration	N/A	Off-site Saline Formation

[A]Removal efficiencies are based on the flue gas content

5.2.1.1 Balance of Plant – Cases B31A and B31B

The balance of plant assumptions are common to both NGCC cases and are presented in Exhibit 5-6.

Exhibit 5-6. NGCC balance of plant assumptions

Parameter	Value
Cooling System	Recirculating Wet Cooling Tower
Fuel and Other Storage	
Natural Gas	Pipeline supply at 3.0 MPa (430 psia) and 27°C (80°F)
Plant Distribution Voltage	
Motors below 1 hp	110/220 V
Motors between 1 hp and 250 hp	480 V
Motors between 250 hp and 5,000 hp	4,160 V
Motors above 5,000 hp	13,800 V
Steam and CT generators	18,000 V
Grid Interconnection voltage	345 kV
Water and Wastewater	
Makeup Water	The water supply is 50 percent from a local POTW and 50 percent from groundwater and is assumed to be in sufficient quantities to meet plant makeup requirements. Makeup for potable, process, and DI water is drawn from municipal sources.

Parameter	Value
Process Wastewater	Storm water that contacts equipment surfaces is collected and treated for discharge through a permitted discharge.
Sanitary Waste Disposal	Design includes a packaged domestic sewage treatment plant with effluent discharged to the industrial wastewater treatment system. Sludge is hauled off site. Packaged plant is sized for 5.68 m^3/d (1,500 gpd)
Water Discharge	Blowdown is treated for chloride and metals and discharged.

5.2.2 Sparing Philosophy

Dual trains are used to accommodate the size of commercial CTs. There is no redundancy other than normal sparing of rotating equipment. The plant design consists of the following major subsystems:

- Two state-of-the-art 2017 F-Class CTGs (2 x 50 percent)
- Two 3-pressure reheat HRSGs with self-supporting stacks and SCR systems (2 x 50 percent)
- One 3-pressure reheat, triple-admission STG (1 x 100 percent)
- For Case B31B only, one CO_2 absorption system, consisting of an absorber, stripper, and ancillary equipment (1 x 100 percent) and two CO_2 compression systems (2 x 50 percent)

5.2.3 Process Description

In this section, the NGCC process without CO_2 capture is described. The system description follows the BFD in Exhibit 5-7 and stream numbers reference the same exhibit. Exhibit 5-8 provides process data for the numbered streams in the BFD. The BFD shows only one of the two CT/HRSG trains, but the flow rates in the stream table are the total for two systems.

Exhibit 5-7. Case B31A block flow diagram, NGCC without CO_2 capture

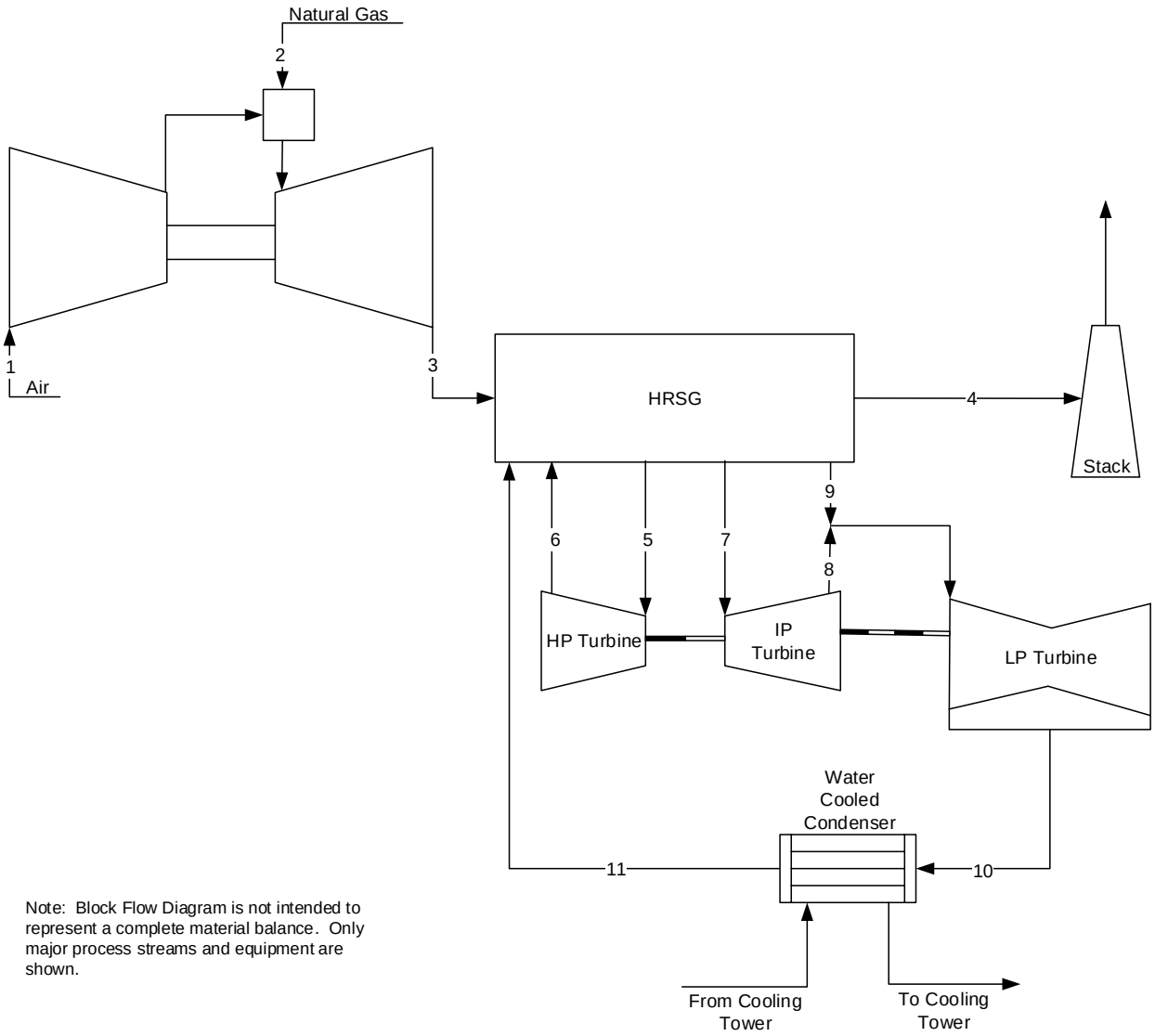

Ambient air (stream 1) is supplied to an inlet filter and compressed before being combined with natural gas (stream 2) in the dry LNB, which is operated to control the rotor inlet temperature at 1,423°C (2,594°F). The flue gas exits the turbine at 624°C (1,156°F) (stream 3) and passes into the HRSG. The HRSG generates both the main steam and reheat steam for the steam turbine. Flue gas exits the HRSG at 82°C (181°F) (stream 4) and passes to the plant stack.

Exhibit 5-8. Case B31A stream table, NGCC without capture

	1	2	3	4	5	6	7	8	9	10	11
Ar	0.0092	0.0000	0.0089	0.0089	0.0000	0.0000	0.0000	0.0000	0.0000	0.0000	0.0000
CH_4	0.0000	0.9310	0.0000	0.0000	0.0000	0.0000	0.0000	0.0000	0.0000	0.0000	0.0000
CH_4S	0.0000	0.0000	0.0000	0.0000	0.0000	0.0000	0.0000	0.0000	0.0000	0.0000	0.0000
C_2H_6	0.0000	0.0320	0.0000	0.0000	0.0000	0.0000	0.0000	0.0000	0.0000	0.0000	0.0000
C_3H_8	0.0000	0.0070	0.0000	0.0000	0.0000	0.0000	0.0000	0.0000	0.0000	0.0000	0.0000
C_4H_{10}	0.0000	0.0040	0.0000	0.0000	0.0000	0.0000	0.0000	0.0000	0.0000	0.0000	0.0000
CO_2	0.0003	0.0100	0.0408	0.0408	0.0000	0.0000	0.0000	0.0000	0.0000	0.0000	0.0000
H_2O	0.0099	0.0000	0.0875	0.0875	1.0000	1.0000	1.0000	1.0000	1.0000	1.0000	1.0000
N_2	0.7732	0.0160	0.7428	0.7428	0.0000	0.0000	0.0000	0.0000	0.0000	0.0000	0.0000
O_2	0.2074	0.0000	0.1200	0.1200	0.0000	0.0000	0.0000	0.0000	0.0000	0.0000	0.0000
SO_2	0.0000	0.0000	0.0000	0.0000	0.0000	0.0000	0.0000	0.0000	0.0000	0.0000	0.0000
Total	1.0000	1.0000	1.0000	1.0000	1.0000	1.0000	1.0000	1.0000	1.0000	1.0000	1.0000
V-L Flowrate (kg_{mol}/hr)	132,867	5,383	138,406	138,406	26,966	26,966	31,148	31,148	4,030	35,178	35,222
V-L Flowrate (kg/hr)	3,834,126	93,272	3,927,398	3,927,398	485,802	485,802	561,147	561,147	72,598	633,745	634,535
Solids Flowrate (kg/hr)	0	0	0	0	0	0	0	0	0	0	0
Temperature (°C)	15	27	625	83	585	356	584	308	281	38	38
Pressure (MPa, abs)	0.10	2.96	0.11	0.10	16.50	3.74	3.51	0.52	0.51	0.01	0.01
Steam Table Enthalpy (kJ/kg)[A]	30.23	22.04	832.66	225.51	3,528.08	3,112.11	3,642.68	3,080.20	3,024.62	2,378.67	160.78
AspenPlus Enthalpy (kJ/kg)[B]	-97.58	-4,487.18	-644.47	-1,251.62	-12,452.22	-12,868.18	-12,337.62	-12,900.10	-12,955.67	-13,601.62	-15,819.51
Density (kg/m^3)	1.2	22.1	0.4	1.0	45.6	13.8	9.0	2.0	2.0	0.1	992.8
V-L Molecular Weight	28.857	17.328	28.376	28.376	18.015	18.015	18.015	18.015	18.015	18.015	18.015
V-L Flowrate (lb_{mol}/hr)	292,921	11,867	305,132	305,132	59,450	59,450	68,670	68,670	8,884	77,555	77,651
V-L Flowrate (lb/hr)	8,452,800	205,630	8,658,430	8,658,430	1,071,010	1,071,010	1,237,117	1,237,117	160,051	1,397,168	1,398,910
Solids Flowrate (lb/hr)	0	0	0	0	0	0	0	0	0	0	0
Temperature (°F)	59	80	1,156	181	1,085	672	1,084	587	538	101	101
Pressure (psia)	14.7	430.0	15.5	14.8	2,393.1	542.3	508.6	75.0	73.5	1.0	1.0
Steam Table Enthalpy (Btu/lb)[A]	13.0	9.5	358.0	96.9	1,516.8	1,338.0	1,566.1	1,324.2	1,300.4	1,022.6	69.1
AspenPlus Enthalpy (Btu/lb)[B]	-42.0	-1,929.1	-277.1	-538.1	-5,353.5	-5,532.3	-5,304.2	-5,546.0	-5,569.9	-5,847.6	-6,801.2
Density (lb/ft^3)	0.076	1.380	0.025	0.061	2.849	0.863	0.563	0.122	0.125	0.003	61.977

[A]Steam table reference conditions are 32.02°F & 0.089 psia

[B]Aspen thermodynamic reference state is the component's constituent elements in an ideal gas state at 25°C and 1 atm

5.2.4 Case B31A – Performance Results

The plant produces a net output of 727 MW at a net plant efficiency of 53.6 percent (HHV basis).

Overall plant performance is summarized in Exhibit 5-9; Exhibit 5-10 provides a detailed breakdown of the auxiliary power requirements.

Exhibit 5-9. Case B31A plant performance summary

Performance Summary	
Combustion Turbine Power, MWe	477
Steam Turbine Power, MWe	263
Total Gross Power, MWe	**740**
CO_2 Capture/Removal Auxiliaries, kWe	0
CO_2 Compression, kWe	0
Balance of Plant, kWe	13,552
Total Auxiliaries, MWe	**14**
Net Power, MWe	**727**
HHV Net Plant Efficiency, %	53.6%
HHV Net Plant Heat Rate, kJ/kWh (Btu/kWh)	6,713 (6,363)
HHV Combustion Turbine Efficiency, %	35.2%
LHV Net Plant Efficiency, %	59.4%
LHV Net Plant Heat Rate, kJ/kWh (Btu/kWh)	6,060 (5,743)
LHV Combustion Turbine Efficiency, %	39.0%
Steam Turbine Cycle Efficiency, %	39.7%
Steam Turbine Heat Rate, kJ/kWh (Btu/kWh)	9,074 (8,600)
Condenser Duty, GJ/hr (MMBtu/hr)	1,405 (1,332)
AGR Cooling Duty, GJ/hr (MMBtu/hr)	– (–)
Natural Gas Feed Flow, kg/hr (lb/hr)	93,272 (205,630)
HHV Thermal Input, kWt	1,354,905
LHV Thermal Input, kWt	1,222,936
Raw Water Withdrawal, $(m^3/min)/MW_{net}$ (gpm/MW_{net})	0.015 (4.0)
Raw Water Consumption, $(m^3/min)/MW_{net}$ (gpm/MW_{net})	0.012 (3.1)

Exhibit 5-10. Case B31A plant power summary

Power Summary	
Combustion Turbine Power, MWe	477
Steam Turbine Power, MWe	263
Total Gross Power, MWe	**740**
Auxiliary Load Summary	
Circulating Water Pumps, kWe	2,810
Combustion Turbine Auxiliaries, kWe	1,020
Condensate Pumps, kWe	150
Cooling Tower Fans, kWe	1,460
CO_2 Capture/Removal Auxiliaries, kWe	0
CO_2 Compression, kWe	0
Feedwater Pumps, kWe	4,830
Ground Water Pumps, kWe	260
Miscellaneous Balance of Plant[A], kWe	570
SCR, kWe	2
Steam Turbine Auxiliaries, kWe	200
Transformer Losses, kWe	2,250
Total Auxiliaries, MWe	**14**
Net Power, MWe	**727**

[A]Includes plant control systems, lighting, HVAC, and miscellaneous low voltage loads

5.2.4.1 Environmental Performance

The environmental targets for emissions of NOx, SO_2, and PM were presented in Section 2.4. A summary of the plant air emissions for Case B31A is presented in Exhibit 5-11.

Exhibit 5-11. Case B31A air emissions

	kg/GJ (lb/MMBtu)	Tonne/year (ton/year)[A]	kg/MWh (lb/MWh)[B]
SO_2	0.000 (0.001)	15 (16)	0.003 (0.006)
NOx	0.002 (0.004)	56 (61)	0.010 (0.022)
Particulate	0.001 (0.002)	29 (32)	0.005 (0.012)
Hg	0.00E+0 (0.00E+0)	0.000 (0.000)	0.00E+0 (0.00E+0)
CO	0.001 (0.002)	29 (32)	0.005 (0.012)
CO_2	51 (119)	1,852,253 (2,041,760)	336 (741)
CO_2[C]	-	-	342 (755)

[A]Calculations based on an 85 percent capacity factor
[B]Emissions based on gross power except where otherwise noted
[C]CO_2 emissions based on net power instead of gross power

For the purpose of this report, the natural gas was assumed to contain the domestic average value of total sulfur of 0.34 gr/100 scf (4.71×10^{-4} lb-S/MMBtu). [14] It was also assumed that the added CH_4S was the sole contributor of sulfur to the natural gas. No sulfur capture systems were required.

The NGCC cases were designed to achieve approximately 1.8 ppmvd NOx emissions (at 15 percent O_2) using a DLN burner in the CTG—the DLN burners reduce the emissions to about 9 ppmvd (at 15 percent O_2) [25]—and an SCR—the SCR system is designed for 85.4 percent NOx reduction. [26]

The pipeline natural gas was assumed to contain no Hg or HCl, resulting in zero emissions.

The state-of-the-art 2017 F-Class gas turbine achieves approximately 1.0 ppmv CO and PM emissions. The production of PM is a result of system inefficiencies and is not produced or emitted in any significant amount.

CO_2 emissions are reduced relative to those produced by burning coal given the same power output because of the higher heat content of natural gas, the lower carbon intensity of gas relative to coal, and the higher overall efficiency of the NGCC plant relative to a coal-fired plant.

The carbon balance for the plant is shown in Exhibit 5-12. The carbon input to the plant consists of carbon in the natural gas and carbon as CO_2 in the CT air. Carbon leaves the plant as CO_2 through the stack.

Exhibit 5-12. Case B31A carbon balance

Carbon In		Carbon Out	
	kg/hr (lb/hr)		kg/hr (lb/hr)
Natural Gas	67,369 (148,523)	Stack Gas	67,890 (149,672)
Air (CO_2)	521 (1,150)	CO_2 Product	0 (0)
		CO_2 KO	0 (0)
		CO_2 Dryer Vent	0 (0)
Total	**67,890 (149,672)**	**Total**	**67,890 (149,672)**

As shown in Exhibit 5-13, the sulfur content of the natural gas is insignificant. All sulfur in the natural gas is emitted in the stack gas.

Exhibit 5-13. Case B31A sulfur balance

Sulfur In		Sulfur Out	
	kg/hr (lb/hr)		kg/hr (lb/hr)
Natural Gas	1 (2)	Stack Gas	1 (2)
		Polishing Scrubber/HSS	0 (0)
Total	**1 (2)**	**Total**	**1 (2)**

Exhibit 5-14 shows the water balance for Case B31A.

Water demand represents the total amount of water required for a particular process. Some water is recovered within the process and is re-used as internal recycle. The difference between demand and recycle is raw water withdrawal. Raw water withdrawal is defined as the water removed from the ground or diverted from a surface-water source for use in the plant and was assumed to be provided 50 percent by a POTW and 50 percent from groundwater. Raw water withdrawal can be represented by the water metered from a raw water source and used in the plant processes for all purposes, such as condenser and cooling tower makeup. The difference between water withdrawal and process water discharge is defined as water consumption and can be represented by the portion of the raw water withdrawn that is evaporated, transpired, incorporated into products or otherwise not returned to the water source from which it was withdrawn. Water consumption represents the net impact of the plant process on the water source balance.

Exhibit 5-14. Case B31A water balance

Water Use	Water Demand	Internal Recycle	Raw Water Withdrawal	Process Water Discharge	Raw Water Consumption
	m^3/min (gpm)	m^3/min (gpm)	m^3/min (gpm)	m^3/min (gpm)	m^3/min (gpm)
CO_2 Drying	–	–	–	–	–
CO_2 Capture System Makeup	–	–	–	–	–
CO_2 Capture Recovery	–	–	–	–	–
CO_2 Compression Recovery	–	–	–	–	–
Deaerator Vent	–	–	–	0.0 (5.6)	0.0 (-5.6)
Condenser Makeup	**0.0 (5.6)**	**–**	**0.0 (5.6)**	**–**	**0.0 (5.6)**
BFW Makeup	0.0 (5.6)	–	0.0 (5.6)	–	0.0 (5.6)
Cooling Tower	11 (2,897)	–	11 (2,897)	2.5 (651)	8.5 (2,245)
Total	**11 (2,902)**	**–**	**11 (2,902)**	**2.5 (657)**	**8.5 (2,245)**

5.2.4.2 Energy and Mass Balance Diagrams

An energy and mass balance diagram is shown for the NGCC in Exhibit 5-15. An overall plant energy balance is provided in tabular form in Exhibit 5-16. The power out is the combined CT and steam turbine power prior to generator losses. The power at the generator terminals (shown in Exhibit 5-9) is calculated by multiplying the power out by the generator efficiency: 98.5 percent for the CT, and 98.7 percent for the steam turbine.

Exhibit 5-15. Case B31A energy and mass balance, NGCC without CO_2 capture

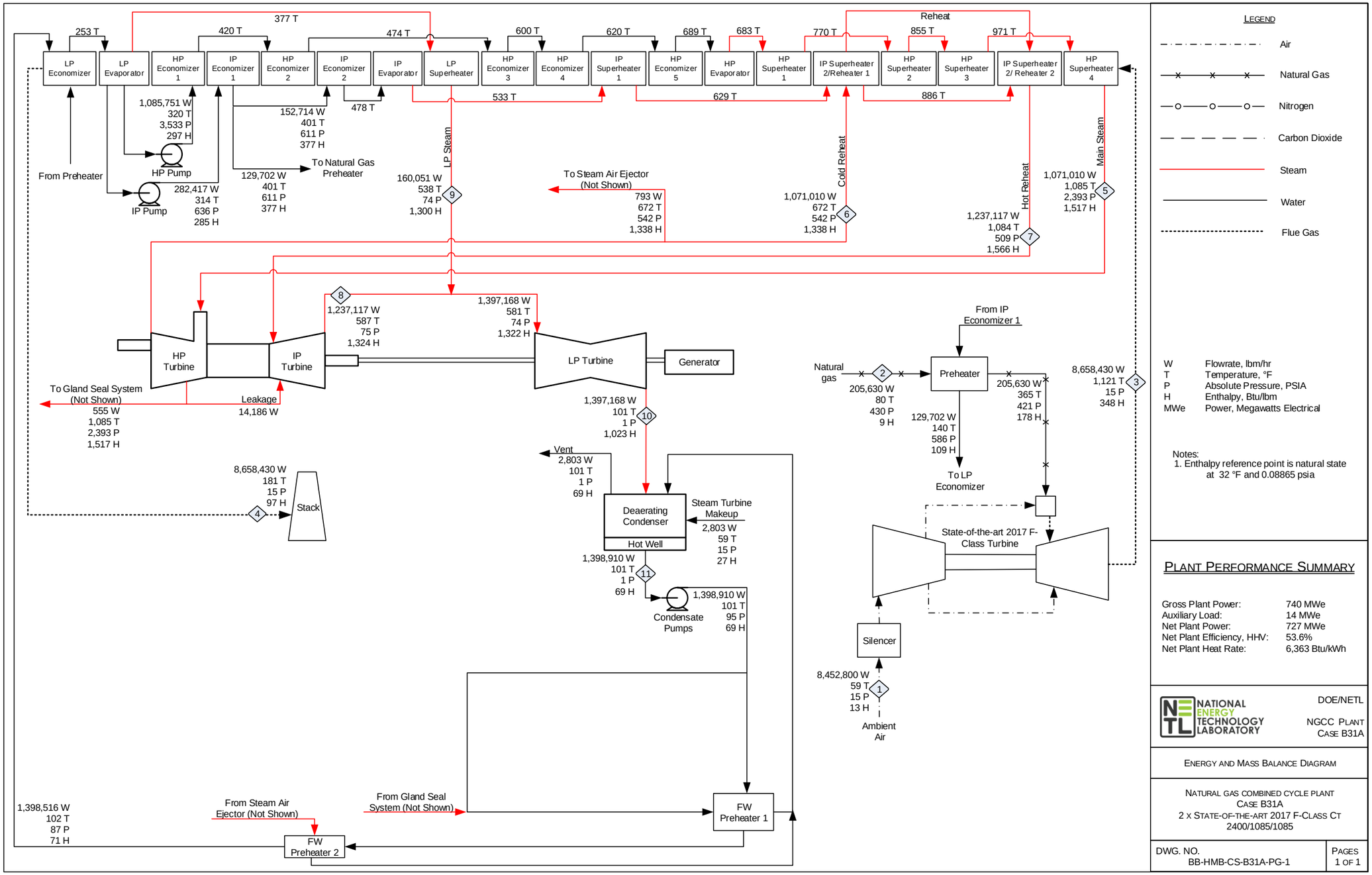

This page intentionally left blank

Exhibit 5-16. Case B31A overall energy balance (0°C [32°F] reference)

	HHV	Sensible + Latent	Power	Total
Heat In GJ/hr (MMBtu/hr)				
Natural Gas	4,878 (4,623)	3.3 (3.1)	–	4,881 (4,626)
Air	–	116 (110)	–	116 (110)
Raw Water Makeup	–	41 (39)	–	41 (39)
Auxiliary Power	–	–	49 (46)	49 (46)
TOTAL	**4,878 (4,623)**	**160 (152)**	**49 (46)**	**5,087 (4,821)**
Heat Out GJ/hr (MMBtu/hr)				
Stack Gas	–	886 (839)	–	886 (839)
Sulfur	0.0 (0.0)	0.0 (0.0)	–	0.0 (0.0)
Motor Losses and Design Allowances	–	–	53 (50)	53 (50)
Cooling Tower Load[A]	–	1,432 (1,357)	–	1,432 (1,357)
CO_2 Product Stream	–	–	–	–
Deaerator Vent	–	0.2 (0.2)	–	0.2 (0.2)
Ambient Losses[B]	–	*33 (31)*	–	33 (31)
Power	–	–	2,664 (2,525)	2,664 (2,525)
TOTAL	**–**	**2,351 (2,228)**	**2,718 (2,576)**	**5,068 (4,804)**
Unaccounted Energy[C]	**–**	*19 (18)*	–	*19 (18)*

[A]Includes condenser, AGR, and miscellaneous cooling loads
[B]Ambient losses include all losses to the environment through radiation, convection, etc. Sources of these losses include the combustor, reheater, superheater, and transformers
[C]By difference

5.2.5 Case B31A – Major Equipment List

Major equipment items for the NGCC plant with no CO_2 capture are shown in the following tables. The accounts used in the equipment list correspond to the account numbers used in the cost estimates in Section 5.2.6. In general, the design conditions include a 10 percent contingency for flows and heat duties and a 21 percent contingency for heads on pumps and fans.

Case B31A – Account 3: Feedwater and Miscellaneous Balance of Plant Systems

Equipment No.	Description	Type	Design Condition	Operating Qty.	Spares
1	Demineralized Water Storage Tank	Vertical, cylindrical, outdoor	168,000 liters (44,000 gal)	2	0
2	Condensate Pumps	Vertical canned	11,710 lpm @ 80 m H_2O (3,090 gpm @ 260 ft H_2O)	1	1

Equipment No.	Description	Type	Design Condition	Operating Qty.	Spares
3	Boiler Feedwater Pump	Horizontal, split case, multi-stage, centrifugal, with interstage bleed for IP and LP feedwater	HP water: 9,090 lpm @ 2,940 m H_2O (2,400 gpm @ 9,640 ft H_2O)	2	2
4	Auxiliary Boiler	Shop fabricated, water tube	IP water: 2,360 lpm @ 470 m H_2O (620 gpm @ 1,550 ft H_2O)	1	0
4	Auxiliary Boiler	Shop fabricated, water tube	18,000 kg/hr, 2.8 MPa, 343°C (40,000 lb/hr, 400 psig, 650°F)	1	0
5	Service Air Compressors	Flooded Screw	13 m^3/min @ 0.7 MPa (450 scfm @ 100 psig)	2	1
6	Instrument Air Dryers	Duplex, regenerative	13 m^3/min (450 scfm)	2	1
7	Closed Cycle Cooling Heat Exchangers	Plate and frame	13 MMkJ/hr (13 MMBtu/hr)	2	0
8	Closed Cycle Cooling Water Pumps	Horizontal centrifugal	5,200 lpm @ 20 m H_2O (1,400 gpm @ 70 ft H_2O)	2	1
9	Engine-Driven Fire Pump	Vertical turbine, diesel engine	3,785 lpm @ 110 m H_2O (1,000 gpm @ 350 ft H_2O)	1	1
10	Fire Service Booster Pump	Two-stage horizontal centrifugal	2,650 lpm @ 80 m H_2O (700 gpm @ 250 ft H_2O)	1	1
11	Raw Water Pumps	Stainless steel, single suction	6,200 lpm @ 20 m H_2O (1,600 gpm @ 60 ft H_2O)	2	1
12	Filtered Water Pumps	Stainless steel, single suction	150 lpm @ 50 m H_2O (40 gpm @ 160 ft H_2O)	2	1
13	Filtered Water Tank	Vertical, cylindrical	145,000 liter (38,000 gal)	1	0
14	Makeup Water Demineralizer	Multi-media filter, cartridge filter, RO membrane assembly and electro-deionization unit	330 lpm (90 gpm)	1	0
15	Liquid Waste Treatment System	–	10 years, 24-hour storm	1	0
16	Gas Pipeline	Underground, coated carbon steel, wrapped cathodic protection	77 m^3/min @ 3.0 MPa (2,732 acfm @ 430 psia) 39 cm (16 in) standard wall pipe	16 km (10 mile)	0
17	Gas Metering Station	–	77 m^3/min (2,732 acfm)	1	0

Case B31A – Account 6: Combustion Turbine and Accessories

Equipment No.	Description	Type	Design Condition	Operating Qty.	Spares
1	Combustion Turbine	Advanced F class w/ dry low-NOx burner	240 MW	2	0
2	Combustion Turbine Generator	Hydrogen Cooled	270 MVA @ 0.9 p.f., 18 kV, 60 Hz, 3-phase	2	0

Case B31A – Account 7: HRSG, Ductwork, and Stack

Equipment No.	Description	Type	Design Condition	Operating Qty.	Spares
1	Stack	CS plate, type 409SS liner	46 m (150 ft) high x 8.0 m (26 ft) diameter	2	0
2	Heat Recovery Steam Generator	Drum, multi-pressure with economizer section	Main steam - 267,191 kg/hr, 16.4 MPa/585°C	2	0

Equipment No.	Description	Type	Design Condition	Operating Qty.	Spares
			(589,056 lb/hr, 2,378 psig/1,085°F) Reheat steam - 305,092 kg/hr, 3.4 MPa/585°C (672,612 lb/hr, 494 psig/1,085°F)		
3	SCR Reactor	–	2,160,000 kg/hr (4,760,000 lb/hr)	2	0
4	SCR Catalyst	–	Space available for an additional catalyst layer	1 layer	0
5	Dilution Air Blowers	Centrifugal	10 m^3/min @ 108 cm WG (220 scfm @ 42 in WG)	2	1
6	Ammonia Feed Pump	Centrifugal	1.3 lpm @ 90 m H_2O (0.3 gpm @ 300 ft H_2O)	2	1
7	Ammonia Storage Tank	Horizontal tank	38,000 liter (10,000 gal)	1	0

Case B31A – Account 8: Steam Turbine and Accessories

Equipment No.	Description	Type	Design Condition	Operating Qty.	Spares
1	Steam Turbine	Commercially available advanced steam turbine	277 MW 16.4 MPa/585°C/585°C (2378.404 psig/ 1085°F/1085°F)	1	0
2	Steam Turbine Generator	Hydrogen cooled, static excitation	310 MVA @ 0.9 p.f., 18 kV, 60 Hz, 3-phase	1	0
3	Surface Condenser	Two pass, divided waterbox including vacuum pumps and integrated deaerator	1,550 GJ/hr (1,470 MMBtu/hr), Inlet water temperature 16°C (60°F), Water temperature rise 11°C (20°F)	1	0
4	Steam Bypass	One per HRSG	50% steam flow @ design steam conditions	2	0

Case B31A – Account 9: Cooling Water System

Equipment No.	Description	Type	Design Condition	Operating Qty.	Spares
1	Circulating Water Pumps	Vertical, wet pit	283,000 lpm @ 30 m (75,000 gpm @ 100 ft)	2	1
2	Cooling Tower	Evaporative, mechanical draft, multi-cell	11°C (51.5°F) wet bulb/ 16°C (60°F) CWT/ 27°C (80°F) HWT/ 1580 GJ/hr (1490 MMBtu/hr) heat duty	1	0

Case B31A – Account 11: Accessory Electric Plant

Equipment No.	Description	Type	Design Condition	Operating Qty.	Spares
1	CTG Transformer	Oil-filled	18 kV/345 kV, 270 MVA, 3-ph, 60 Hz	2	0
2	STG Transformer	Oil-filled	18 kV/345 kV, 290 MVA, 3-ph, 60 Hz	1	0
3	High Voltage Auxiliary Transformer	Oil-filled	345 kV/13.8 kV, 0 MVA, 3-ph, 60 Hz	2	0

Equipment No.	Description	Type	Design Condition	Operating Qty.	Spares
4	Medium Voltage Transformer	Oil-filled	18 kV/4.16 kV, 11 MVA, 3-ph, 60 Hz	1	1
5	Low Voltage Transformer	Dry ventilated	4.16 kV/480 V, 2 MVA, 3-ph, 60 Hz	1	1
6	CTG Isolated Phase Bus Duct and Tap Bus	Aluminum, self-cooled	18 kV, 3-ph, 60 Hz	2	0
7	STG Isolated Phase Bus Duct and Tap Bus	Aluminum, self-cooled	18 kV, 3-ph, 60 Hz	1	0
8	Medium Voltage Switchgear	Metal clad	4.16 kV, 3-ph, 60 Hz	1	1
9	Low Voltage Switchgear	Metal enclosed	480 V, 3-ph, 60 Hz	1	1
10	Emergency Diesel Generator	Sized for emergency shutdown	750 kW, 480 V, 3-ph, 60 Hz	1	0

Case B31A – Account 12: Instrumentation and Control

Equipment No.	Description	Type	Design Condition	Operating Qty.	Spares
1	DCS - Main Control	Monitor/keyboard; Operator printer (laser color); Engineering printer (laser B&W)	Operator stations/printers and engineering stations/printers	1	0
2	DCS - Processor	Microprocessor with redundant input/output	N/A	1	0
3	DCS - Data Highway	Fiber optic	Fully redundant, 25% spare	1	0

5.2.6 Case B31A – Cost Estimating

The cost estimating methodology was described previously in Section 2.7. Exhibit 5-17 shows a detailed breakdown of the capital costs; Exhibit 5-18 shows the owner's costs, TOC, and TASC; Exhibit 5-19 shows the initial and annual O&M costs; and Exhibit 5-20 shows the LCOE breakdown.

The estimated TPC of the NGCC with no CO_2 capture is $780/kW. No process contingency was included in this case because all elements of the technology are commercially proven. The project contingency is 13.7 percent of TPC. The LCOE is $43.3/MWh.

Exhibit 5-17. Case B31A total plant cost details

Case:		B31A	– 2x1 CT NGCC w/o CO_2				Estimate Type:			Conceptual	
Plant Size (MW, net):		727					Cost Base:			Dec 2018	
Item No.	Description	Equipment Cost	Material Cost	Labor		Bare Erected Cost	Eng'g CM H.O.& Fee	Contingencies		Total Plant Cost	
				Direct	Indirect			Process	Project	$/1,000	$/kW
3	Feedwater & Miscellaneous BOP Systems										
3.1	Feedwater System	$1,696	$2,908	$1,454	$0	$6,059	$1,212	$0	$1,091	$8,361	$12
3.2	Water Makeup & Pretreating	$3,756	$376	$2,128	$0	$6,260	$1,252	$0	$1,502	$9,014	$12
3.3	Other Feedwater Subsystems	$965	$316	$301	$0	$1,582	$316	$0	$285	$2,183	$3
3.4	Service Water Systems	$1,140	$2,176	$7,046	$0	$10,362	$2,072	$0	$2,487	$14,921	$21
3.5	Other Boiler Plant Systems	$230	$84	$209	$0	$523	$105	$0	$94	$721	$1
3.6	Natural Gas Pipeline and Start-Up System	$9,304	$400	$300	$0	$10,005	$2,001	$0	$1,801	$13,807	$19
3.7	Waste Water Treatment Equipment	$4,998	$0	$3,063	$0	$8,061	$1,612	$0	$1,935	$11,608	$16
3.9	Miscellaneous Plant Equipment	$14,217	$1,865	$7,225	$0	$23,306	$4,661	$0	$5,594	$33,561	$46
	Subtotal	**$36,307**	**$8,124**	**$21,726**	**$0**	**$66,157**	**$13,231**	**$0**	**$14,788**	**$94,177**	**$130**
6	Combustion Turbine & Accessories										
6.1	Combustion Turbine Generator	$72,224	$0	$4,395	$0	$76,619	$15,324	$0	$13,791	$105,735	$146
6.3	Combustion Turbine Accessories	$2,626	$0	$160	$0	$2,786	$557	$0	$501	$3,845	$5
6.4	Compressed Air Piping	$0	$867	$196	$0	$1,063	$213	$0	$191	$1,467	$2
6.5	Combustion Turbine Foundations	$0	$906	$979	$0	$1,885	$377	$0	$452	$2,714	$4
	Subtotal	**$74,850**	**$1,773**	**$5,730**	**$0**	**$82,353**	**$16,471**	**$0**	**$14,937**	**$113,760**	**$157**
7	HRSG, Ductwork, & Stack										
7.1	Heat Recovery Steam Generator	$38,293	$0	$9,573	$0	$47,866	$9,573	$0	$8,616	$66,055	$91
7.2	Heat Recovery Steam Generator Accessories	$15,127	$0	$2,799	$0	$17,927	$3,585	$0	$3,227	$24,739	$34
7.3	Ductwork	$0	$1,019	$708	$0	$1,727	$345	$0	$311	$2,383	$3
7.4	Stack	$9,744	$0	$1,803	$0	$11,548	$2,310	$0	$2,079	$15,936	$22
7.5	Heat Recovery Steam Generator, Ductwork & Stack Foundations	$0	$760	$713	$0	$1,472	$294	$0	$353	$2,120	$3
7.6	Selective Catalytic Reduction System	$1,465	$616	$859	$0	$2,940	$588	$0	$529	$4,057	$6
	Subtotal	**$64,630**	**$2,394**	**$16,455**	**$0**	**$83,479**	**$16,696**	**$0**	**$15,115**	**$115,289**	**$159**
8	Steam Turbine & Accessories										
8.1	Steam Turbine Generator & Accessories	$37,060	$0	$5,427	$0	$42,487	$8,497	$0	$7,648	$58,632	$81
8.2	Steam Turbine Plant Auxiliaries	$146	$0	$333	$0	$478	$96	$0	$86	$660	$1
8.3	Condenser & Auxiliaries	$6,988	$0	$3,353	$0	$10,341	$2,068	$0	$1,861	$14,270	$20
8.4	Steam Piping	$9,400	$0	$3,809	$0	$13,210	$2,642	$0	$2,378	$18,230	$25
8.5	Turbine Generator Foundations	$0	$1,252	$2,068	$0	$3,320	$664	$0	$797	$4,781	$7
	Subtotal	**$53,594**	**$1,252**	**$14,990**	**$0**	**$69,836**	**$13,967**	**$0**	**$12,770**	**$96,572**	**$133**

Case:		B31A	– 2x1 CT NGCC w/o CO_2				Estimate Type:			Conceptual	
Plant Size (MW, net):		727					Cost Base:			Dec 2018	
Item No.	Description	Equipment Cost	Material Cost	Labor		Bare Erected Cost	Eng'g CM H.O.& Fee	Contingencies		Total Plant Cost	
				Direct	Indirect			Process	Project	$/1,000	$/kW
9						Cooling Water System					
9.1	Cooling Towers	$8,179	$0	$2,495	$0	$10,674	$2,135	$0	$1,921	$14,730	$20
9.2	Circulating Water Pumps	$1,076	$0	$63	$0	$1,139	$228	$0	$205	$1,572	$2
9.3	Circulating Water System Auxiliaries	$8,188	$0	$1,080	$0	$9,269	$1,854	$0	$1,668	$12,791	$18
9.4	Circulating Water Piping	$0	$2,312	$2,094	$0	$4,406	$881	$0	$793	$6,080	$8
9.5	Make-up Water System	$303	$0	$389	$0	$692	$138	$0	$125	$955	$1
9.6	Component Cooling Water System	$341	$0	$262	$0	$602	$120	$0	$108	$831	$1
9.7	Circulating Water System Foundations	$0	$535	$888	$0	$1,423	$285	$0	$342	$2,049	$3
	Subtotal	**$18,087**	**$2,847**	**$7,271**	**$0**	**$28,205**	**$5,641**	**$0**	**$5,162**	**$39,009**	**$54**
11						Accessory Electric Plant					
11.1	Generator Equipment	$2,579	$0	$1,945	$0	$4,524	$905	$0	$814	$6,243	$9
11.2	Station Service Equipment	$2,942	$0	$252	$0	$3,195	$639	$0	$575	$4,409	$6
11.3	Switchgear & Motor Control	$4,201	$0	$729	$0	$4,930	$986	$0	$887	$6,803	$9
11.4	Conduit & Cable Tray	$0	$1,015	$2,926	$0	$3,941	$788	$0	$709	$5,438	$7
11.5	Wire & Cable	$0	$1,516	$2,709	$0	$4,224	$845	$0	$760	$5,830	$8
11.6	Protective Equipment	$104	$0	$360	$0	$464	$93	$0	$84	$640	$1
11.7	Standby Equipment	$652	$0	$602	$0	$1,253	$251	$0	$226	$1,730	$2
11.8	Main Power Transformers	$6,933	$0	$141	$0	$7,075	$1,415	$0	$1,273	$9,763	$13
11.9	Electrical Foundations	$0	$94	$238	$0	$332	$66	$0	$80	$478	$1
	Subtotal	**$17,410**	**$2,624**	**$9,903**	**$0**	**$29,937**	**$5,987**	**$0**	**$5,409**	**$41,333**	**$57**
12						Instrumentation & Control					
12.1	Natural Gas Combined Cycle Control Equipment	$206	$0	$131	$0	$337	$67	$0	$61	$465	$1
12.2	Combustion Turbine Control Equipment	$395	$0	$251	$0	$646	$129	$0	$116	$892	$1
12.3	Steam Turbine Control Equipment	$330	$0	$210	$0	$540	$108	$0	$97	$745	$1
12.4	Other Major Component Control Equipment	$553	$0	$352	$0	$905	$181	$0	$163	$1,249	$2
12.5	Signal Processing Equipment	$461	$0	$14	$0	$475	$95	$0	$86	$656	$1
12.6	Control Boards, Panels & Racks	$122	$0	$74	$0	$197	$39	$0	$35	$271	$0
12.7	Distributed Control System Equipment	$6,779	$0	$206	$0	$6,985	$1,397	$0	$1,257	$9,639	$13
12.8	Instrument Wiring & Tubing	$560	$448	$1,791	$0	$2,798	$560	$0	$504	$3,861	$5
12.9	Other Instrumentation & Controls Equipment	$388	$0	$898	$0	$1,285	$257	$0	$231	$1,773	$2
	Subtotal	**$9,793**	**$448**	**$3,928**	**$0**	**$14,168**	**$2,834**	**$0**	**$2,550**	**$19,551**	**$27**
13						Improvements to Site					
13.1	Site Preparation	$0	$537	$11,394	$0	$11,930	$2,386	$0	$2,863	$17,180	$24
13.2	Site Improvements	$0	$1,727	$2,280	$0	$4,007	$801	$0	$962	$5,770	$8
13.3	Site Facilities	$1,657	$0	$1,738	$0	$3,394	$679	$0	$815	$4,888	$7
	Subtotal	**$1,657**	**$2,263**	**$15,412**	**$0**	**$19,332**	**$3,866**	**$0**	**$4,640**	**$27,837**	**$38**

Case:		B31A	– 2x1 CT NGCC w/o CO_2				Estimate Type:			Conceptual	
Plant Size (MW, net):		727					Cost Base:			Dec 2018	
Item No.	Description	Equipment Cost	Material Cost	Labor		Bare Erected Cost	Eng'g CM H.O.& Fee	Contingencies		Total Plant Cost	
				Direct	Indirect			Process	Project	$/1,000	$/kW
14	Buildings & Structures										
14.1	Combustion Turbine Area	$0	$346	$183	$0	$528	$106	$0	$95	$729	$1
14.3	Steam Turbine Building	$0	$3,486	$4,637	$0	$8,122	$1,624	$0	$1,462	$11,209	$15
14.4	Administration Building	$0	$368	$249	$0	$617	$123	$0	$111	$852	$1
14.5	Circulation Water Pumphouse	$0	$56	$28	$0	$83	$17	$0	$15	$115	$0
14.6	Water Treatment Buildings	$0	$312	$285	$0	$597	$119	$0	$107	$824	$1
14.7	Machine Shop	$0	$551	$352	$0	$903	$181	$0	$162	$1,246	$2
14.8	Warehouse	$0	$428	$258	$0	$687	$137	$0	$124	$947	$1
14.9	Other Buildings & Structures	$0	$313	$227	$0	$540	$108	$0	$97	$746	$1
14.10	Waste Treating Building & Structures	$0	$722	$1,287	$0	$2,010	$402	$0	$362	$2,773	$4
	Subtotal	**$0**	**$6,581**	**$7,506**	**$0**	**$14,087**	**$2,817**	**$0**	**$2,536**	**$19,441**	**$27**
	Total	**$276,327**	**$28,307**	**$102,921**	**$0**	**$407,555**	**$81,511**	**$0**	**$77,905**	**$566,971**	**$780**

Exhibit 5-18. Case B31A owner's costs

Description	$/1,000	$/kW
Pre-Production Costs		
6 Months All Labor	$4,063	$6
1 Month Maintenance Materials	$634	$1
1 Month Non-Fuel Consumables	$270	$0
1 Month Waste Disposal	$0	$0
25% of 1 Months Fuel Cost at 100% CF	$3,729	$5
2% of TPC	$11,339	$16
Total	**$20,036**	**$28**
Inventory Capital		
60-day supply of fuel and consumables at 100% CF	$299	$0
0.5% of TPC (spare parts)	$2,835	$4
Total	**$3,134**	**$4**
Other Costs		
Initial Cost for Catalyst and Chemicals	$847	$1
Land	$300	$0
Other Owner's Costs	$85,046	$117
Financing Costs	$15,308	$21
Total Overnight Costs (TOC)	**$691,642**	**$952**
TASC Multiplier (IOU, 33 year)	1.093	
Total As-Spent Cost (TASC)	**$755,721**	**$1,040**

Exhibit 5-19. Case B31A initial and annual operating and maintenance costs

Case:	B31A	– 2x1 CT NGCC w/o CO_2			Cost Base:	Dec 2018
Plant Size (MW, net):	727	Heat Rate-net (Btu/kWh):		6,363	Capacity Factor (%):	85
Operating & Maintenance Labor						
Operating Labor				**Operating Labor Requirements per Shift**		
Operating Labor Rate (base):		38.50	**$/hour**	Skilled Operator:		1.0
Operating Labor Burden:		30.00	**% of base**	Operator:		2.0
Labor O-H Charge Rate:		25.00	**% of labor**	Foreman:		1.0
				Lab Techs, etc.:		1.0
				Total:		**5.0**
Fixed Operating Costs						
					Annual Cost	
					($)	**($/kW-net)**
Annual Operating Labor:					$2,192,190	$3.017
Maintenance Labor:					$4,308,976	$5.931
Administrative & Support Labor:					$1,625,292	$2.237
Property Taxes and Insurance:					$11,339,411	$15.607
Total:					**$19,465,868**	**$26.792**
Variable Operating Costs						
					($)	**($/MWh-net)**
Maintenance Material:					$6,463,464	$1.19475
Consumables						
	Initial Fill	**Per Day**	**Per Unit**	**Initial Fill**		
Water (/1000 gallons):	0	2,090	$1.90	$0	$1,231,776	$0.22769
Makeup and Waste Water Treatment Chemicals (ton):	0	6.22	$550	$0	$1,062,162	$0.19634
Ammonia (19 wt%, ton):	0	3.45	$300	$0	$320,926	$0.05932
SCR Catalyst (ft^3):	5,649	3.10	$150	$847,300	$144,041	$0.02663
Subtotal:				**$847,300**	**$2,758,905**	**$0.50998**
Waste Disposal						
SCR Catalyst (ft^3):	0	3.10	$2.50	$0	$2,401	$0.00044
Subtotal:				**$0**	**$2,401**	**$0.00044**
Variable Operating Costs Total:				**$847,300**	**$9,224,770**	**$1.70517**
Fuel Cost						
Natural Gas (MMBtu):	0	110,955	$4.42	$0	$152,160,153	$28.12636
Total:				**$0**	**$152,160,153**	**$28.12636**

Exhibit 5-20. Case B31A LCOE breakdown

Component	Value, $/MWh	Percentage
Capital	9.9	23%
Fixed	3.6	8%
Variable	1.7	4%
Fuel	28.1	65%
Total (Excluding T&S)	**43.3**	**N/A**
CO_2 T&S	0.0	0%
Total (Including T&S)	**43.3**	**N/A**

5.2.7 Case B31B – NGCC with CO_2 Capture

The plant configuration for Case B31B is the same as Case B31A with the exception that the CDR technology was added for CO_2 capture. The nominal net output decreases to 646 MW because the CT designed output is fixed and the CDR facility significantly increases the auxiliary power load. Additionally, the CDR facility's steam requirements reduce the power output of the steam turbine.

The process description for Case B31B is essentially the same as Case B31A with one notable exception, the addition of CO_2 capture. A BFD and stream tables for Case B31B are shown in Exhibit 5-21 and Exhibit 5-22, respectively. Since the CDR facility process description was provided in Section 5.1.5, it is not repeated here.

5.2.8 Case B31B – Performance Results

The Case B31B modeling assumptions were presented previously in Section 5.2.1.

The plant produces a net output of 646 MW at a net plant efficiency of 47.7 percent (HHV basis). Overall plant performance is summarized in Exhibit 5-23 provides a detailed breakdown of the auxiliary power requirements. The CDR facility, including CO_2 compression, accounts for over 62 percent of the auxiliary plant load. The CWS (CWPs and cooling tower fan) accounts for nearly 16 percent of the auxiliary load, largely due to the high cooling water demand of the CDR facility.

Exhibit 5-21. Case B31B block flow diagram, NGCC with CO_2 capture

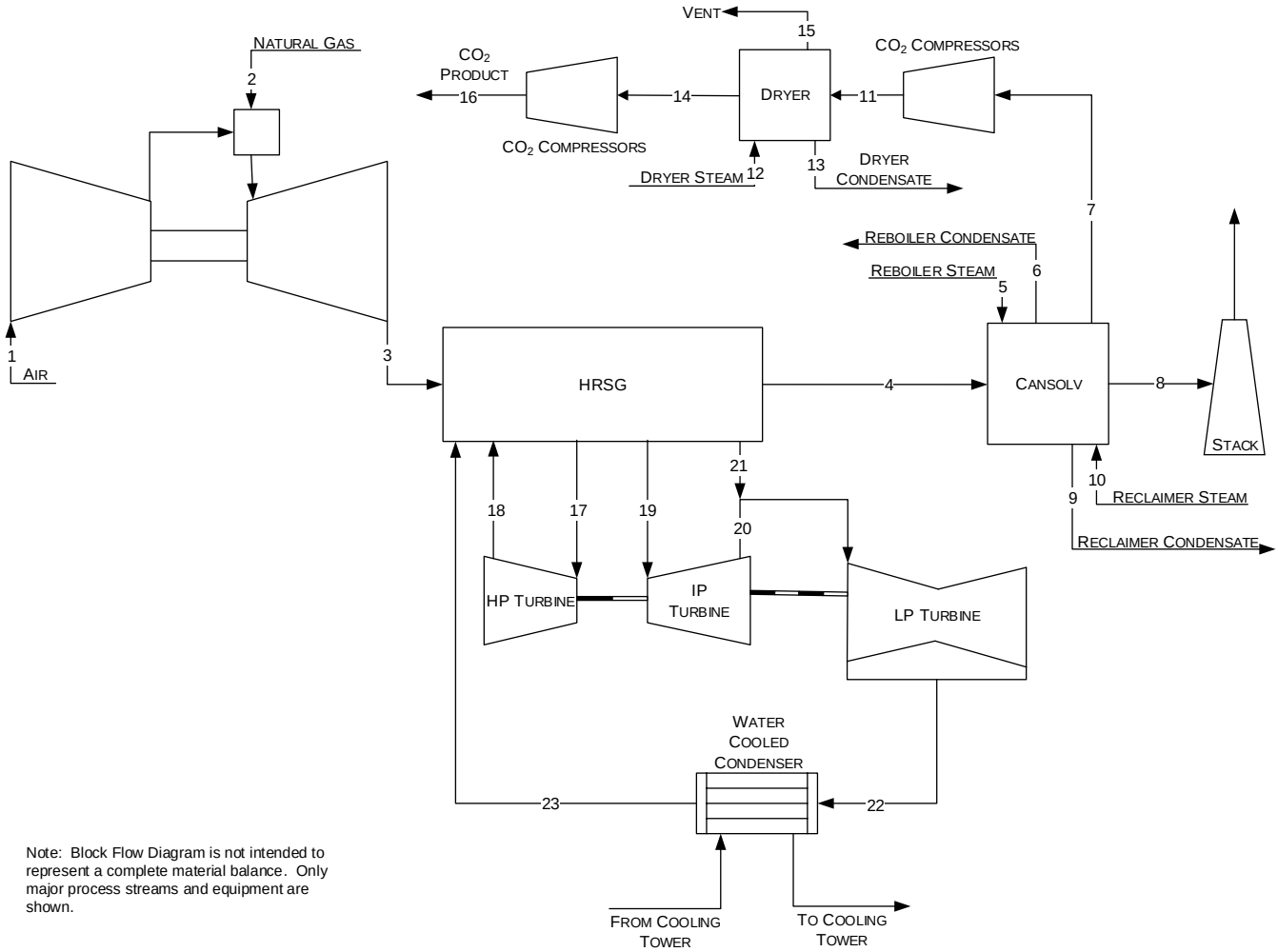

Note: Block Flow Diagram is not intended to represent a complete material balance. Only major process streams and equipment are shown.

Exhibit 5-22. Case B31B stream table, NGCC with capture

	1	2	3	4	5	6	7	8	9	10	11	12
V-L Mole Fraction												
Ar	0.0092	0.0000	0.0089	0.0089	0.0000	0.0000	0.0000	0.0098	0.0000	0.0000	0.0000	0.0000
CH_4	0.0000	0.9310	0.0000	0.0000	0.0000	0.0000	0.0000	0.0000	0.0000	0.0000	0.0000	0.0000
CH_4S	0.0000	0.0000	0.0000	0.0000	0.0000	0.0000	0.0000	0.0000	0.0000	0.0000	0.0000	0.0000
C_2H_6	0.0000	0.0320	0.0000	0.0000	0.0000	0.0000	0.0000	0.0000	0.0000	0.0000	0.0000	0.0000
C_3H_8	0.0000	0.0070	0.0000	0.0000	0.0000	0.0000	0.0000	0.0000	0.0000	0.0000	0.0000	0.0000
C_4H_{10}	0.0000	0.0040	0.0000	0.0000	0.0000	0.0000	0.0000	0.0000	0.0000	0.0000	0.0000	0.0000
CO_2	0.0003	0.0100	0.0408	0.0408	0.0000	0.0000	0.9865	0.0045	0.0000	0.0000	0.9961	0.0000
H_2O	0.0099	0.0000	0.0875	0.0875	1.0000	1.0000	0.0135	0.0358	1.0000	1.0000	0.0039	1.0000
N_2	0.7732	0.0160	0.7428	0.7428	0.0000	0.0000	0.0000	0.8179	0.0000	0.0000	0.0000	0.0000
O_2	0.2074	0.0000	0.1200	0.1200	0.0000	0.0000	0.0000	0.1321	0.0000	0.0000	0.0000	0.0000
SO_2	0.0000	0.0000	0.0000	0.0000	0.0000	0.0000	0.0000	0.0000	0.0000	0.0000	0.0000	0.0000
Total	1.0000	1.0000	1.0000	1.0000	1.0000	1.0000	1.0000	1.0000	1.0000	1.0000	1.0000	1.0000
V-L Flowrate (kg_{mol}/hr)	132,867	5,383	138,406	138,406	14,392	14,392	5,157	125,705	130	130	5,107	7
V-L Flowrate (kg/hr)	3,834,126	93,272	3,927,398	3,927,398	259,273	259,273	225,137	3,566,358	2,335	2,335	224,240	133
Solids Flowrate (kg/hr)	0	0	0	0	0	0	0	0	0	0	0	0
Temperature (°C)	15	27	625	111	308	151	30	30	214	356	29	356
Pressure (MPa, abs)	0.10	2.96	0.11	0.10	0.51	0.49	0.20	0.10	2.04	3.74	3.04	3.74
Steam Table Enthalpy (kJ/kg)[A]	30.23	22.04	832.66	255.52	3,080.20	635.93	38.36	87.90	913.81	3,112.11	-4.49	3,112.11
AspenPlus Enthalpy (kJ/kg)[B]	-97.58	-4,487.18	-644.47	-1,221.61	-12,900.10	-15,344.37	-8,963.99	-361.92	-15,066.49	-12,868.18	-8,978.11	-12,868.18
Density (kg/m^3)	1.2	22.1	0.4	0.9	1.9	916.3	3.5	1.1	848.5	13.8	63.6	13.8
V-L Molecular Weight	28.857	17.328	28.376	28.376	18.015	18.015	43.659	28.371	18.015	18.015	43.909	18.015
V-L Flowrate (lb_{mol}/hr)	292,921	11,867	305,132	305,132	31,729	31,729	11,369	277,132	286	286	11,259	16
V-L Flowrate (lb/hr)	8,452,800	205,630	8,658,430	8,658,430	571,599	571,599	496,343	7,862,473	5,147	5,147	494,365	294
Solids Flowrate (lb/hr)	0	0	0	0	0	0	0	0	0	0	0	0
Temperature (°F)	59	80	1,156	231	586	304	86	87	416	672	85	672
Pressure (psia)	14.7	430.0	15.5	14.8	73.5	70.6	28.9	14.8	296.6	542.3	441.1	542.3
Steam Table Enthalpy (Btu/lb)[A]	13.0	9.5	358.0	109.9	1,324.2	273.4	16.5	37.8	392.9	1,338.0	-1.9	1,338.0
AspenPlus Enthalpy (Btu/lb)[B]	-42.0	-1,929.1	-277.1	-525.2	-5,546.0	-6,596.9	-3,853.8	-155.6	-6,477.4	-5,532.3	-3,859.9	-5,532.3
Density (lb/ft^3)	0.076	1.380	0.025	0.057	0.119	57.201	0.218	0.071	52.968	0.863	3.971	0.863

[A]Steam table reference conditions are 32.02°F & 0.089 psia

[B]Aspen thermodynamic reference state is the component's constituent elements in an ideal gas state at 25°C and 1 atm

Exhibit 5-22. Case B31B stream table, NGCC with capture (continued)

	13	14	15	16	17	18	19	20	21	22	23
V-L Mole Fraction											
Ar	0.0000	0.0000	0.0000	0.0000	0.0000	0.0000	0.0000	0.0000	0.0000	0.0000	0.0000
CH_4	0.0000	0.0000	0.0000	0.0000	0.0000	0.0000	0.0000	0.0000	0.0000	0.0000	0.0000
CH_4S	0.0000	0.0000	0.0000	0.0000	0.0000	0.0000	0.0000	0.0000	0.0000	0.0000	0.0000
C_2H_6	0.0000	0.0000	0.0000	0.0000	0.0000	0.0000	0.0000	0.0000	0.0000	0.0000	0.0000
C_3H_8	0.0000	0.0000	0.0000	0.0000	0.0000	0.0000	0.0000	0.0000	0.0000	0.0000	0.0000
C_4H_{10}	0.0000	0.0000	0.0000	0.0000	0.0000	0.0000	0.0000	0.0000	0.0000	0.0000	0.0000
CO_2	0.0000	0.9995	0.0500	0.9995	0.0000	0.0000	0.0000	0.0000	0.0000	0.0000	0.0000
H_2O	1.0000	0.0005	0.9500	0.0005	1.0000	1.0000	1.0000	1.0000	1.0000	1.0000	1.0000
N_2	0.0000	0.0000	0.0000	0.0000	0.0000	0.0000	0.0000	0.0000	0.0000	0.0000	0.0000
O_2	0.0000	0.0000	0.0000	0.0000	0.0000	0.0000	0.0000	0.0000	0.0000	0.0000	0.0000
SO_2	0.0000	0.0000	0.0000	0.0000	0.0000	0.0000	0.0000	0.0000	0.0000	0.0000	0.0000
Total	1.0000	1.0000	1.0000	1.0000	1.0000	1.0000	1.0000	1.0000	1.0000	1.0000	1.0000
V-L Flowrate (kg_{mol}/hr)	7	5,089	18	5,089	26,991	26,991	31,036	31,036	4,030	20,674	35,246
V-L Flowrate (kg/hr)	133	223,888	353	223,888	486,242	486,242	559,118	559,118	72,598	372,443	634,975
Solids Flowrate (kg/hr)	0	0	0	0	0	0	0	0	0	0	0
Temperature (°C)	203	29	29	30	585	356	584	308	281	38	38
Pressure (MPa, abs)	1.64	2.90	3.04	15.27	16.50	3.74	3.51	0.52	0.51	0.01	0.01
Steam Table Enthalpy (kJ/kg)[A]	863.65	-6.32	137.79	-231.09	3,528.08	3,112.11	3,642.67	3,080.20	3,024.62	2,376.09	160.78
AspenPlus Enthalpy (kJ/kg)[B]	-15,116.65	-8,969.87	-15,225.37	-9,194.65	-12,452.22	-12,868.18	-12,337.62	-12,900.10	-12,955.67	-13,604.20	-15,819.51
Density (kg/m^3)	861.8	60.1	375.2	630.1	45.6	13.8	9.0	2.0	2.0	0.1	992.8
V-L Molecular Weight	18.015	43.997	19.315	43.997	18.015	18.015	18.015	18.015	18.015	18.015	18.015
V-L Flowrate (lb_{mol}/hr)	16	11,219	40	11,219	59,504	59,504	68,422	68,422	8,884	45,578	77,705
V-L Flowrate (lb/hr)	294	493,588	777	493,588	1,071,980	1,071,980	1,232,645	1,232,645	160,051	821,097	1,399,880
Solids Flowrate (lb/hr)	0	0	0	0	0	0	0	0	0	0	0
Temperature (°F)	397	85	85	86	1,085	672	1,084	587	538	101	101
Pressure (psia)	237.4	421.1	441.1	2,214.7	2,393.1	542.3	508.6	75.0	73.5	1.0	1.0
Steam Table Enthalpy (Btu/lb)[A]	371.3	-2.7	59.2	-99.4	1,516.8	1,338.0	1,566.1	1,324.2	1,300.4	1,021.5	69.1
AspenPlus Enthalpy (Btu/lb)[B]	-6,499.0	-3,856.4	-6,545.7	-3,953.0	-5,353.5	-5,532.3	-5,304.2	-5,546.0	-5,569.9	-5,848.8	-6,801.2
Density (lb/ft^3)	53.801	3.755	23.421	39.338	2.849	0.863	0.563	0.122	0.125	0.003	61.977

[A]Steam table reference conditions are 32.02°F & 0.089 psia

[B]Aspen thermodynamic reference state is the component's constituent elements in an ideal gas state at 25°C and 1 atm

Exhibit 5-23. Case B31B plant performance summary

Performance Summary	
Combustion Turbine Power, MWe	477
Steam Turbine Power, MWe	213
Total Gross Power, MWe	**690**
CO_2 Capture/Removal Auxiliaries, kWe	10,600
CO_2 Compression, kWe	17,090
Balance of Plant, kWe	16,372
Total Auxiliaries, MWe	**44**
Net Power, MWe	**646**
HHV Net Plant Efficiency, %	47.7%
HHV Net Plant Heat Rate, kJ/kWh (Btu/kWh)	7,554 (7,159)
HHV Combustion Turbine Efficiency, %	35.2%
LHV Net Plant Efficiency, %	52.8%
LHV Net Plant Heat Rate, kJ/kWh (Btu/kWh)	6,818 (6,462)
LHV Combustion Turbine Efficiency, %	39.0%
Steam Turbine Cycle Efficiency, %	46.8%
Steam Turbine Heat Rate, kJ/kWh (Btu/kWh)	7,684 (7,283)
Condenser Duty, GJ/hr (MMBtu/hr)	832 (788)
AGR Cooling Duty, GJ/hr (MMBtu/hr)	1,351 (1,281)
Natural Gas Feed Flow, kg/hr (lb/hr)	93,272 (205,630)
HHV Thermal Input, kWt	1,354,905
LHV Thermal Input, kWt	1,222,936
Raw Water Withdrawal, $(m^3/min)/MW_{net}$ (gpm/MW_{net})	0.028 (7.4)
Raw Water Consumption, $(m^3/min)/MW_{net}$ (gpm/MW_{net})	0.018 (4.8)

Exhibit 5-24. Case B31B plant power summary

Power Summary	
Combustion Turbine Power, MWe	477
Steam Turbine Power, MWe	213
Total Gross Power, MWe	**690**
Auxiliary Load Summary	
Circulating Water Pumps, kWe	4,580
Combustion Turbine Auxiliaries, kWe	1,020
Condensate Pumps, kWe	170
Cooling Tower Fans, kWe	2,370
CO_2 Capture/Removal Auxiliaries, kWe	10,600
CO_2 Compression, kWe	17,090
Feedwater Pumps, kWe	4,830
Ground Water Pumps, kWe	430
Miscellaneous Balance of Plant[A], kWe	570
SCR, kWe	2
Steam Turbine Auxiliaries, kWe	200
Transformer Losses, kWe	2,200
Total Auxiliaries, MWe	**44**
Net Power, MWe	**646**

[A]Includes plant control systems, lighting, HVAC, and miscellaneous low voltage loads

5.2.8.1 Environmental Performance

The environmental targets for emissions of NOx, SO_2, and PM were presented in Section 2.4. A summary of the plant air emissions for Case B31B is presented in Exhibit 5-25.

Exhibit 5-25. Case B31B air emissions

	kg/GJ (lb/MMBtu)	Tonne/year (ton/year)[A]	kg/MWh (lb/MWh)[B]
SO_2	0.000 (0.000)	0 (0)	0.000 (0.000)
NOx	0.001 (0.003)	51 (56)	0.010 (0.022)
Particulate	0.000 (0.000)	0 (0)	0.000 (0.000)
Hg	0.00E+0 (0.00E+0)	0.000 (0.000)	0.00E+0 (0.00E+0)
CO	0.000 (0.000)	0 (0)	0.000 (0.000)
CO_2	5 (12)	185,225 (204,176)	36 (80)
CO_2[C]	-	-	39 (85)

[A]Calculations based on an 85 percent capacity factor
[B]Emissions based on gross power except where otherwise noted
[C]CO_2 emissions based on net power instead of gross power

For the purpose of this report, the natural gas was assumed to contain the domestic average value of total sulfur of 0.34 gr/100 scf (4.71×10^{-4} lb-S/MMBtu). [14] It was also assumed that the added CH_4S was the sole contributor of sulfur to the natural gas. No sulfur capture systems were required.

The NGCC cases were designed to achieve approximately 1.8 ppmvd NOx emissions (at 15 percent O_2) using a DLN burner in the CTG—the DLN burners reduce the emissions to about 9 ppmvd (at 15 percent O_2) [25]—and an SCR—the SCR system is designed for 86.7 percent NOx reduction. [26]

The pipeline natural gas was assumed to contain no Hg or HCl, resulting in zero emissions.

The state-of-the-art 2017 F-Class gas turbine achieves approximately 1.0 ppmv CO and PM emissions. The production of PM is a result of system inefficiencies and is not present in any significant amount. Any CO or PM present in the flue gas is assumed to interact with, and be removed by, the CDR system solvent.

CO_2 emissions are reduced relative to those produced by burning coal given the same power output because of the higher heat content of natural gas, the lower carbon intensity of gas relative to coal, and the higher overall efficiency of the NGCC plant relative to a coal-fired plant.

Ninety percent of the CO_2 in the flue gas is removed in the CDR facility.

The carbon balance for the plant is shown in Exhibit 5-26. The carbon input to the plant consists of carbon in the natural gas in addition to carbon in the CT air. Carbon leaves the plant as CO_2 in the stack gas, the CO_2 dryer's vent, and the captured CO_2 product. The carbon capture efficiency is defined as one minus the amount of carbon in the stack gas relative to the total carbon in, represented by the following fraction:

$$\frac{Carbon\ in\ Stack}{(Total\ Carbon\ In)} = \left(1 - \left(\frac{14{,}967}{149{,}672}\right)\right) * 100 = 90.0\%$$

Exhibit 5-26. Case B31B carbon balance

Carbon In		Carbon Out	
	kg/hr (lb/hr)		kg/hr (lb/hr)
Natural Gas	67,369 (148,523)	Stack Gas	6,789 (14,967)
Air (CO_2)	521 (1,150)	CO_2 Product	61,090 (134,681)
		CO_2 Dryer Vent	11 (24)
		CO_2 Knockout	0.1 (0.2)
Total	**67,890 (149,672)**	**Total**	**67,890 (149,672)**

As shown in Exhibit 5-27, the sulfur content of the natural gas is insignificant, comprised entirely of CH_4S (used as an odorant). [14] All sulfur in the natural gas is assumed to react with the CDR system solvent and is removed from the solvent during solvent reclaiming as a waste stream.

Exhibit 5-27. Case B31B sulfur balance

Sulfur In		Sulfur Out	
	kg/hr (lb/hr)		kg/hr (lb/hr)
Natural Gas	1 (2)	Stack Gas	0 (0)
		Solvent Reclaiming	1 (2)
Total	**1 (2)**	**Total**	**1 (2)**

Exhibit 5-28 shows the overall water balance for the plant.

Exhibit 5-28. Case B31B water balance

Water Use	Water Demand	Internal Recycle	Raw Water Withdrawal	Process Water Discharge	Raw Water Consumption
	m^3/min (gpm)	m^3/min (gpm)	m^3/min (gpm)	m^3/min (gpm)	m^3/min (gpm)
CO_2 Drying	–	–	–	0.0 (1.6)	0.0 (-1.6)
CO_2 Capture System Makeup	0.2 (55)	–	0.2 (55)	–	0.2 (55)
CO_2 Capture Recovery	–	–	–	2.3 (599)	-2.3 (-599)
CO_2 Compression Recovery	–	–	–	0.0 (4.0)	0.0 (-4.0)
Deaerator Vent	–	–	–	0.0 (5.6)	0.0 (-5.6)
Condenser Makeup	**0.0 (5.6)**	**–**	**0.0 (5.6)**	**–**	**0.0 (5.6)**
BFW Makeup	0.0 (5.6)	–	0.0 (5.6)	–	0.0 (5.6)
Cooling Tower	18 (4,712)	–	18 (4,712)	4.0 (1,060)	14 (3,653)
Total	18 (4,773)	–	18 (4,773)	6.3 (1,670)	12 (3,103)

5.2.8.2 Energy and Mass Balance Diagrams

An energy and mass balance diagram is shown for the NGCC in Exhibit 5-29. An overall plant energy balance is provided in tabular form in Exhibit 5-30.

The power out is the combined CT and steam turbine power prior to generator losses. The power at the generator terminals (shown in Exhibit 5-23) is calculated by multiplying the power out by the generator efficiency: 98.5 percent for the CT, and 98.7 percent for the steam turbine. The cooling tower load includes the condenser, capture process heat rejected to cooling water, the CO_2 compressor intercooler load, and other miscellaneous cooling loads.

Exhibit 5-29. Case B31B energy and mass balance, NGCC with CO_2 capture

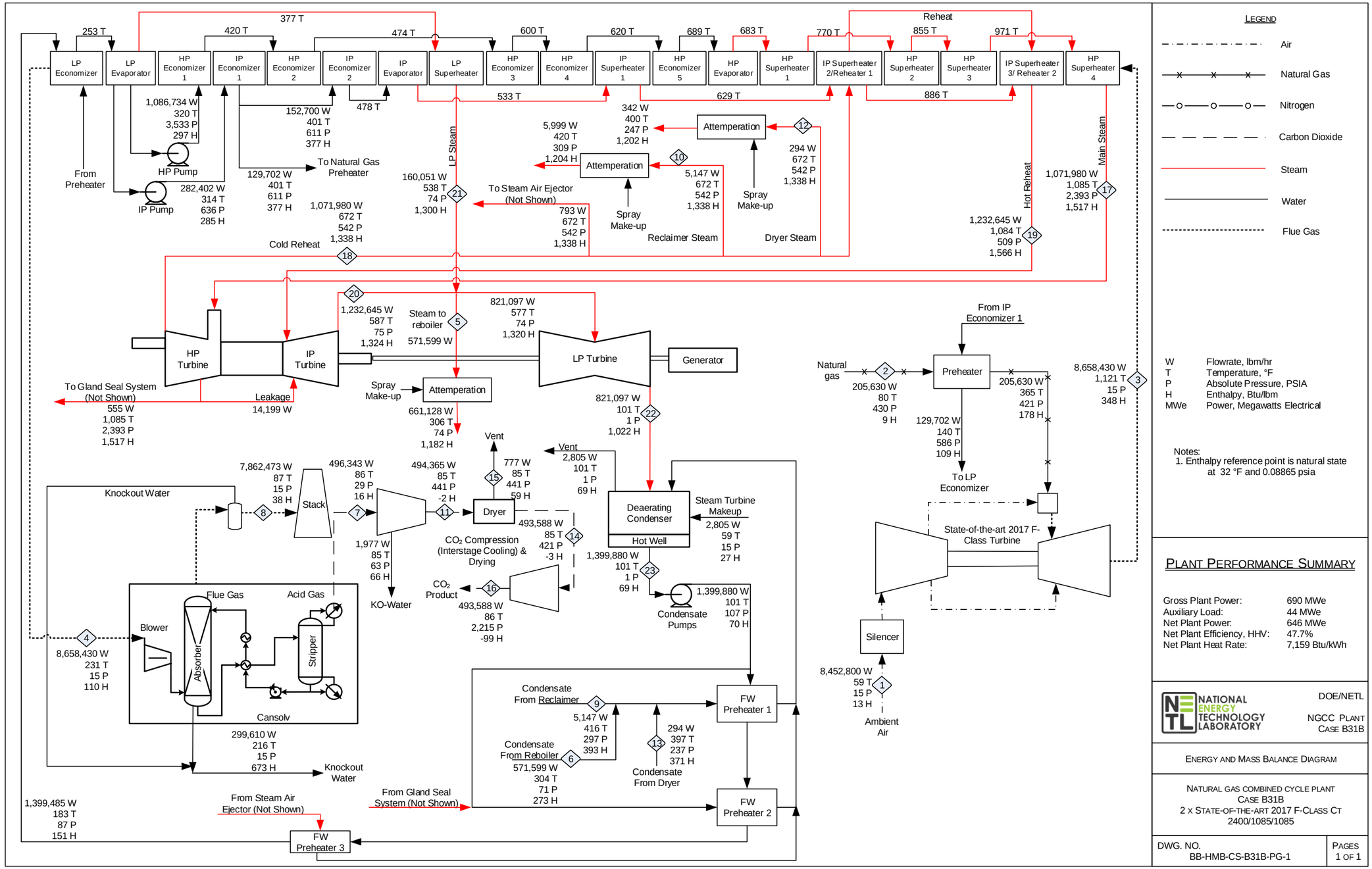

This page intentionally left blank

Exhibit 5-30. Case B31B overall energy balance (0°C [32°F] reference)

	HHV	Sensible + Latent	Power	Total
Heat In GJ/hr (MMBtu/hr)				
Natural Gas	4,878 (4,623)	3.3 (3.1)	–	4,881 (4,626)
Air	–	116 (110)	–	116 (110)
Raw Water Makeup	–	68 (64)	–	68 (64)
Auxiliary Power	–	–	159 (150)	159 (150)
TOTAL	**4,878 (4,623)**	**187 (177)**	**159 (150)**	**5,223 (4,951)**
Heat Out GJ/hr (MMBtu/hr)				
Stack Gas	–	314 (297)	–	314 (297)
Sulfur	0.0 (0.0)	0.0 (0.0)	–	0.0 (0.0)
Motor Losses and Design Allowances	–	–	53 (50)	53 (50)
Cooling Tower Load[A]	–	2,329 (2,208)	–	2,329 (2,208)
CO_2 Product Stream	–	-52 (-49)	–	-52 (-49)
Deaerator Vent	–	0.2 (0.2)	–	0.2 (0.2)
Ambient Losses[B]	–	*36 (34)*	–	36 (34)
Power	–	–	2,483 (2,354)	2,483 (2,354)
TOTAL	**–**	**2,628 (2,490)**	**2,536 (2,404)**	**5,164 (4,894)**
Unaccounted Energy[C]	**–**	*60 (56)*	–	*60 (56)*

[A]Includes condenser, AGR, and miscellaneous cooling loads
Ambient losses include all losses to the environment through radiation, convection, etc. Sources of these losses include the combustor, reheater, superheater, and transformers
[B]By difference

5.2.9 Case B31B – Major Equipment List

Major equipment items for the NGCC plant with CO_2 capture are shown in the following tables. The accounts used in the equipment list correspond to the account numbers used in the cost estimates in Section 5.2.10. In general, the design conditions include a 10 percent contingency for flows and heat duties and a 21 percent contingency for heads on pumps and fans.

Case B31B – Account 3: Feedwater and Miscellaneous Balance of Plant Systems

Equipment No.	Description	Type	Design Condition	Operating Qty.	Spares
1	Demineralized Water Storage Tank	Vertical, cylindrical, outdoor	168,000 liters (44,000 gal)	2	0
2	Condensate Pumps	Vertical canned	11,720 lpm @ 90 m H_2O (3,100 gpm @ 300 ft H_2O)	1	1
3	Boiler Feedwater Pump	Horizontal, split case, multi-stage, centrifugal, with interstage bleed for IP and LP feedwater	HP water: 9,100 lpm @ 2,940 m H_2O (2,400 gpm @ 9,640 ft H_2O)	2	2
4	Auxiliary Boiler	Shop fabricated, water tube	IP water: 2,360 lpm @ 470 m H_2O (620 gpm @ 1,550 ft H_2O)	1	0
4	Auxiliary Boiler	Shop fabricated, water tube	18,000 kg/hr, 2.8 MPa, 343°C (40,000 lb/hr, 400 psig, 650°F)	1	0
5	Service Air Compressors	Flooded Screw	13 m^3/min @ 0.7 MPa (450 scfm @ 100 psig)	2	1
6	Instrument Air Dryers	Duplex, regenerative	13 m^3/min (450 scfm)	2	1
7	Closed Cycle Cooling Heat Exchangers	Plate and frame	13 MMkJ/hr (13 MMBtu/hr)	2	0
8	Closed Cycle Cooling Water Pumps	Horizontal centrifugal	5,200 lpm @ 20 m H_2O (1,400 gpm @ 70 ft H_2O)	2	1
9	Engine-Driven Fire Pump	Vertical turbine, diesel engine	3,785 lpm @ 110 m H_2O (1,000 gpm @ 350 ft H_2O)	1	1
10	Fire Service Booster Pump	Two-stage horizontal centrifugal	2,650 lpm @ 80 m H_2O (700 gpm @ 250 ft H_2O)	1	1
11	Raw Water Pumps	Stainless steel, single suction	8,800 lpm @ 20 m H_2O (2,300 gpm @ 60 ft H_2O)	2	1
12	Filtered Water Pumps	Stainless steel, single suction	260 lpm @ 50 m H_2O (70 gpm @ 160 ft H_2O)	2	1
13	Filtered Water Tank	Vertical, cylindrical	254,000 liter (67,000 gal)	1	0
14	Makeup Water Demineralizer	Multi-media filter, cartridge filter, RO membrane assembly and electro-deionization unit	560 lpm (150 gpm)	1	0
15	Liquid Waste Treatment System	–	10 years, 24-hour storm	1	0
16	Gas Pipeline	Underground, coated carbon steel, wrapped cathodic protection	77 m^3/min @ 3.0 MPa (2,732 acfm @ 430 psia) 39 cm (16 in) standard wall pipe	16 km (10 mile)	0
17	Gas Metering Station	–	77 m^3/min (2,732 acfm)	1	0

Case B31B – Account 5: Flue Gas Cleanup

Equipment No.	Description	Type	Design Condition	Operating Qty.	Spares
1	Cansolv	Amine-based CO2 capture technology	4,320,000 kg/hr (9,524,000 lb/hr) 6.3 wt% CO_2 concentration	1	0
2	Cansolv LP Condensate Pump	Centrifugal	757 lpm @ 1 m H_2O (200 gpm @ 4 ft H_2O)	1	1
3	Cansolv HP Condensate Pump	Centrifugal	7 lpm @ 5 m H_2O (2 gpm @ 15 ft H_2O)	1	1
4	CO_2 Dryer	Triethylene glycol	Inlet: 62 m^3/min @ 2.9 MPa (2,191 acfm @ 421 psia) Outlet: 4.6 MPa (667 psia)	1	0

Equipment No.	Description	Type	Design Condition	Operating Qty.	Spares
			Water Recovered: 353 kg/hr (777 lb/hr)		
5	CO_2 Compressor	Integrally geared, multi-stage centrifugal	3.0 m^3/min @ 15.3 MPa, 80°C (115 acfm @ 2,217 psia, 176°F)	2	0
6	CO_2 Aftercooler	Shell and tube heat exchanger	Outlet: 15.3 MPa, 30°C (2,215psia, 86°F) Duty: 34 MMkJ/hr (32 MMBtu/hr)	1	0

Case B31B – Account 6: Combustion Turbine and Accessories

Equipment No.	Description	Type	Design Condition	Operating Qty.	Spares
1	Combustion Turbine	Advanced F class w/ dry low-NOx burner	240 MW	2	0
2	Combustion Turbine Generator	Hydrogen Cooled	270 MVA @ 0.9 p.f., 18 kV, 60 Hz, 3-phase	2	0

Case B31B – Account 7: HRSG, Ductwork, and Stack

Equipment No.	Description	Type	Design Condition	Operating Qty.	Spares
1	Stack	CS plate, type 409SS liner	46 m (150 ft) high x 7.0 m (23 ft) diameter	2	0
2	Heat Recovery Steam Generator	Drum, multi-pressure with economizer section	Main steam - 267,433 kg/hr, 16.4 MPa/585°C (589,589 lb/hr, 2,378 psig/1,085°F) Reheat steam - 303,973 kg/hr, 3.4 MPa/585°C (670,145 lb/hr, 494 psig/1,085°F)	2	0
3	SCR Reactor	–	1,960,000 kg/hr (4,320,000 lb/hr)	2	0
4	SCR Catalyst	–	Space available for an additional catalyst layer	1 layer	0
5	Dilution Air Blowers	Centrifugal	10 m^3/min @ 108 cm WG (220 scfm @ 42 in WG)	2	1
6	Ammonia Feed Pump	Centrifugal	1.3 lpm @ 90 m H_2O (0.4 gpm @ 300 ft H_2O)	2	1
7	Ammonia Storage Tank	Horizontal tank	38,000 liter (10,000 gal)	1	0

Case B31B – Account 8: Steam Turbine and Accessories

Equipment No.	Description	Type	Design Condition	Operating Qty.	Spares
1	Steam Turbine	Commercially available advanced steam turbine	224 MW 16.4 MPa/585°C/585°C (2378.404 psig/ 1085°F/1085°F)	1	0
2	Steam Turbine Generator	Hydrogen cooled, static excitation	250 MVA @ 0.9 p.f., 18 kV, 60 Hz, 3-phase	1	0
3	Surface Condenser	Two pass, divided waterbox including vacuum pumps and integrated deaerator	920 GJ/hr (870 MMBtu/hr), Inlet water temperature 16°C (60°F), Water temperature rise 11°C (20°F)	1	0
4	Steam Bypass	One per HRSG	50% steam flow @ design steam conditions	2	0

Case B31B – Account 9: Cooling Water System

Equipment No.	Description	Type	Design Condition	Operating Qty.	Spares
1	Circulating Water Pumps	Vertical, wet pit	460,000 lpm @ 30 m (121,000 gpm @ 100 ft)	2	1
2	Cooling Tower	Evaporative, mechanical draft, multi-cell	11°C (51.5°F) wet bulb/ 16°C (60°F) CWT/ 27°C (80°F) HWT/ 2560 GJ/hr (2430 MMBtu/hr) heat duty	1	0

Case B31B – Account 11: Accessory Electric Plant

Equipment No.	Description	Type	Design Condition	Operating Qty.	Spares
1	CTG Transformer	Oil-filled	18 kV/345 kV, 270 MVA, 3-ph, 60 Hz	2	0
2	STG Transformer	Oil-filled	18 kV/345 kV, 200 MVA, 3-ph, 60 Hz	1	0
3	High Voltage Auxiliary Transformer	Oil-filled	345 kV/13.8 kV, 9 MVA, 3-ph, 60 Hz	2	0
4	Medium Voltage Transformer	Oil-filled	18 kV/4.16 kV, 21 MVA, 3-ph, 60 Hz	1	1
5	Low Voltage Transformer	Dry ventilated	4.16 kV/480 V, 7 MVA, 3-ph, 60 Hz	1	1
6	CTG Isolated Phase Bus Duct and Tap Bus	Aluminum, self-cooled	18 kV, 3-ph, 60 Hz	2	0
7	STG Isolated Phase Bus Duct and Tap Bus	Aluminum, self-cooled	18 kV, 3-ph, 60 Hz	1	0
8	Medium Voltage Switchgear	Metal clad	4.16 kV, 3-ph, 60 Hz	1	1
9	Low Voltage Switchgear	Metal enclosed	480 V, 3-ph, 60 Hz	1	1
10	Emergency Diesel Generator	Sized for emergency shutdown	750 kW, 480 V, 3-ph, 60 Hz	1	0

Case B31B – Account 12: Instrumentation and Control

Equipment No.	Description	Type	Design Condition	Operating Qty.	Spares
1	DCS - Main Control	Monitor/keyboard; Operator printer (laser color); Engineering printer (laser B&W)	Operator stations/printers and engineering stations/printers	1	0
2	DCS - Processor	Microprocessor with redundant input/output	N/A	1	0
3	DCS - Data Highway	Fiber optic	Fully redundant, 25% spare	1	0

5.2.10 Case B31B – Cost Estimating

The cost estimating methodology was described previously in Section 2.7. Exhibit 5-31 shows a detailed breakdown of the capital costs; Exhibit 5-32 shows the owner's costs, TOC, and TASC; Exhibit 5-33 shows the initial and annual O&M costs; and Exhibit 5-34 shows the LCOE breakdown.

The estimated TPC of the NGCC with CO_2 capture is $1,984/kW. Process contingency represents 5.3 percent of the TPC and project contingency represents 15.3 percent. The LCOE, including CO_2 T&S costs of $3.5/MWh, is $74.4/MWh.

Exhibit 5-31. Case B31B total plant cost details

Case:		B31B	– 2x1 CT NGCC w/ CO_2				Estimate Type:			Conceptual	
Plant Size (MW, net):		646					Cost Base:			Dec 2018	
Item No.	Description	Equipment Cost	Material Cost	Labor		Bare Erected Cost	Eng'g CM H.O.& Fee	Contingencies		Total Plant Cost	
				Direct	Indirect			Process	Project	$/1,000	$/kW
3	Feedwater & Miscellaneous BOP Systems										
3.1	Feedwater System	$1,698	$2,910	$1,455	$0	$6,063	$1,213	$0	$1,091	$8,367	$13
3.2	Water Makeup & Pretreating	$5,347	$535	$3,030	$0	$8,912	$1,782	$0	$2,139	$12,834	$20
3.3	Other Feedwater Subsystems	$966	$317	$301	$0	$1,583	$317	$0	$285	$2,185	$3
3.4	Service Water Systems	$1,623	$3,098	$10,031	$0	$14,752	$2,950	$0	$3,540	$21,243	$33
3.5	Other Boiler Plant Systems	$230	$84	$209	$0	$523	$105	$0	$94	$722	$1
3.6	Natural Gas Pipeline and Start-Up System	$9,304	$400	$300	$0	$10,005	$2,001	$0	$1,801	$13,807	$21
3.7	Waste Water Treatment Equipment	$9,693	$0	$5,941	$0	$15,634	$3,127	$0	$3,752	$22,512	$35
3.9	Miscellaneous Plant Equipment	$14,217	$1,865	$7,225	$0	$23,306	$4,661	$0	$5,594	$33,561	$52
	Subtotal	**$43,078**	**$9,208**	**$28,493**	**$0**	**$80,778**	**$16,156**	**$0**	**$18,296**	**$115,230**	**$178**
5	Flue Gas Cleanup										
5.1	Cansolv Carbon Dioxide (CO_2) Removal System	$148,215	$72,722	$152,716	$0	$373,652	74,730	67,257	103,128	$618,768	$958
5.4	Carbon Dioxide (CO_2) Compression & Drying	$26,481	$3,972	$10,986	$0	$41,440	$8,288	$0	$9,946	$59,674	$92
5.5	Carbon Dioxide (CO_2) Compressor Aftercooler	$218	$35	$93	$0	$346	$69	$0	$83	$498	$1
5.12	Gas Cleanup Foundations	$0	$382	$413	$0	$795	$159	$0	$191	$1,145	$2
	Subtotal	**$174,914**	**$77,111**	**$164,208**	**$0**	**$416,233**	**$83,247**	**$67,257**	**$113,347**	**$680,085**	**$1,053**
6	Combustion Turbine & Accessories										
6.1	Combustion Turbine Generator	$72,224	$0	$4,395	$0	$76,619	$15,324	$0	$13,791	$105,735	$164
6.3	Combustion Turbine Accessories	$2,626	$0	$160	$0	$2,786	$557	$0	$501	$3,845	$6
6.4	Compressed Air Piping	$0	$867	$196	$0	$1,063	$213	$0	$191	$1,467	$2
6.5	Combustion Turbine Foundations	$0	$906	$979	$0	$1,885	$377	$0	$452	$2,714	$4
	Subtotal	**$74,850**	**$1,773**	**$5,730**	**$0**	**$82,353**	**$16,471**	**$0**	**$14,937**	**$113,760**	**$176**
7	HRSG, Ductwork, & Stack										
7.1	Heat Recovery Steam Generator	$34,545	$0	$8,636	$0	$43,181	$8,636	$0	$7,773	$59,590	$92
7.2	Heat Recovery Steam Generator Accessories	$12,307	$0	$2,283	$0	$14,590	$2,918	$0	$2,626	$20,134	$31
7.3	Ductwork	$0	$852	$592	$0	$1,445	$289	$0	$260	$1,994	$3
7.4	Stack	$8,150	$0	$1,512	$0	$9,662	$1,932	$0	$1,739	$13,333	$21
7.5	Heat Recovery Steam Generator, Ductwork & Stack Foundations	$0	$635	$597	$0	$1,232	$246	$0	$296	$1,774	$3
7.6	Selective Catalytic Reduction System	$1,465	$616	$859	$0	$2,940	$588	$0	$529	$4,057	$6
	Subtotal	**$56,467**	**$2,104**	**$14,479**	**$0**	**$73,049**	**$14,610**	**$0**	**$13,223**	**$100,882**	**$156**

Case:	B31B	– 2x1 CT NGCC w/ CO_2					Estimate Type:			Conceptual	
Plant Size (MW, net):	646						Cost Base:			Dec 2018	
Item No.	Description	Equipment Cost	Material Cost	Labor Direct	Labor Indirect	Bare Erected Cost	Eng'g CM H.O.& Fee	Contingencies Process	Contingencies Project	Total Plant Cost $/1,000	Total Plant Cost $/kW
8						Steam Turbine & Accessories					
8.1	Steam Turbine Generator & Accessories	$31,267	$0	$4,579	$0	$35,846	$7,169	$0	$6,452	$49,468	$77
8.2	Steam Turbine Plant Auxiliaries	$127	$0	$283	$0	$410	$82	$0	$74	$565	$1
8.3	Condenser & Auxiliaries	$4,425	$0	$2,369	$0	$6,795	$1,359	$0	$1,223	$9,376	$15
8.4	Steam Piping	$9,400	$0	$3,810	$0	$13,210	$2,642	$0	$2,378	$18,230	$28
8.5	Turbine Generator Foundations	$0	$1,072	$1,770	$0	$2,843	$569	$0	$682	$4,094	$6
	Subtotal	**$45,220**	**$1,072**	**$12,811**	**$0**	**$59,103**	**$11,821**	**$0**	**$10,809**	**$81,733**	**$127**
9						Cooling Water System					
9.1	Cooling Towers	$11,574	$0	$3,505	$0	$15,079	$3,016	$0	$2,714	$20,809	$32
9.2	Circulating Water Pumps	$1,524	$0	$93	$0	$1,618	$324	$0	$291	$2,232	$3
9.3	Circulating Water System Auxiliaries	$10,383	$0	$1,370	$0	$11,753	$2,351	$0	$2,116	$16,219	$25
9.4	Circulating Water Piping	$0	$3,096	$2,804	$0	$5,900	$1,180	$0	$1,062	$8,142	$13
9.5	Make-up Water System	$368	$0	$472	$0	$840	$168	$0	$151	$1,159	$2
9.6	Component Cooling Water System	$456	$0	$350	$0	$807	$161	$0	$145	$1,113	$2
9.7	Circulating Water System Foundations	$0	$716	$1,189	$0	$1,906	$381	$0	$457	$2,744	$4
	Subtotal	**$24,306**	**$3,812**	**$9,784**	**$0**	**$37,902**	**$7,580**	**$0**	**$6,937**	**$52,419**	**$81**
11						Accessory Electric Plant					
11.1	Generator Equipment	$2,474	$0	$1,866	$0	$4,340	$868	$0	$781	$5,989	$9
11.2	Station Service Equipment	$6,257	$0	$537	$0	$6,794	$1,359	$0	$1,223	$9,376	$15
11.3	Switchgear & Motor Control	$8,934	$0	$1,550	$0	$10,484	$2,097	$0	$1,887	$14,469	$22
11.4	Conduit & Cable Tray	$0	$2,159	$6,222	$0	$8,381	$1,676	$0	$1,509	$11,566	$18
11.5	Wire & Cable	$0	$3,223	$5,761	$0	$8,985	$1,797	$0	$1,617	$12,399	$19
11.6	Protective Equipment	$379	$0	$1,318	$0	$1,697	$339	$0	$305	$2,342	$4
11.7	Standby Equipment	$630	$0	$582	$0	$1,212	$242	$0	$218	$1,672	$3
11.8	Main Power Transformers	$5,975	$0	$122	$0	$6,097	$1,219	$0	$1,097	$8,414	$13
11.9	Electrical Foundations	$0	$89	$227	$0	$316	$63	$0	$76	$455	$1
	Subtotal	**$24,650**	**$5,471**	**$18,184**	**$0**	**$48,306**	**$9,661**	**$0**	**$8,714**	**$66,681**	**$103**
12						Instrumentation & Control					
12.1	Natural Gas Combined Cycle Control Equipment	$240	$0	$153	$0	$393	$79	$0	$71	$542	$1
12.2	Combustion Turbine Control Equipment	$395	$0	$252	$0	$646	$129	$0	$116	$892	$1
12.3	Steam Turbine Control Equipment	$384	$0	$245	$0	$629	$126	$0	$113	$868	$1
12.4	Other Major Component Control Equipment	$645	$0	$411	$0	$1,055	$211	$53	$198	$1,517	$2
12.5	Signal Processing Equipment	$538	$0	$16	$0	$554	$111	$0	$100	$765	$1
12.6	Control Boards, Panels & Racks	$142	$0	$87	$0	$229	$46	$11	$43	$329	$1

Case:		B31B	– 2x1 CT NGCC w/ CO_2				Estimate Type:			Conceptual	
Plant Size (MW, net):		646					Cost Base:			Dec 2018	
Item No.	Description	Equipment Cost	Material Cost	Labor		Bare Erected Cost	Eng'g CM H.O.& Fee	Contingencies		Total Plant Cost	
				Direct	Indirect			Process	Project	$/1,000	$/kW
12.7	Distributed Control System Equipment	$7,900	$0	$242	$0	$8,142	$1,628	$407	$1,527	$11,704	$18
12.8	Instrument Wiring & Tubing	$652	$522	$2,087	$0	$3,261	$652	$163	$612	$4,688	$7
12.9	Other Instrumentation & Controls Equipment	$452	$0	$1,046	$0	$1,498	$300	$75	$281	$2,153	$3
	Subtotal	**$11,347**	**$522**	**$4,538**	**$0**	**$16,407**	**$3,281**	**$709**	**$3,060**	**$23,457**	**$36**
	13					**Improvements to Site**					
13.1	Site Preparation	$0	$554	$11,772	$0	$12,326	$2,465	$0	$2,958	$17,750	$27
13.2	Site Improvements	$0	$1,783	$2,357	$0	$4,140	$828	$0	$994	$5,961	$9
13.3	Site Facilities	$1,711	$0	$1,796	$0	$3,507	$701	$0	$842	$5,050	$8
	Subtotal	**$1,711**	**$2,338**	**$15,924**	**$0**	**$19,973**	**$3,995**	**$0**	**$4,794**	**$28,761**	**$45**
	14					**Buildings & Structures**					
14.1	Combustion Turbine Area	$0	$346	$183	$0	$528	$106	$0	$95	$729	$1
14.3	Steam Turbine Building	$0	$3,068	$4,082	$0	$7,150	$1,430	$0	$1,287	$9,867	$15
14.4	Administration Building	$0	$359	$243	$0	$602	$120	$0	$108	$831	$1
14.5	Circulation Water Pumphouse	$0	$83	$41	$0	$124	$25	$0	$22	$171	$0
14.6	Water Treatment Buildings	$0	$431	$392	$0	$823	$165	$0	$148	$1,136	$2
14.7	Machine Shop	$0	$537	$344	$0	$880	$176	$0	$158	$1,215	$2
14.8	Warehouse	$0	$418	$252	$0	$670	$134	$0	$121	$925	$1
14.9	Other Buildings & Structures	$0	$308	$223	$0	$531	$106	$0	$96	$733	$1
14.10	Waste Treating Building & Structures	$0	$704	$1,258	$0	$1,962	$392	$0	$353	$2,708	$4
	Subtotal	**$0**	**$6,254**	**$7,018**	**$0**	**$13,271**	**$2,654**	**$0**	**$2,389**	**$18,314**	**$28**
	Total	**$456,543**	**$109,664**	**$281,169**	**$0**	**$847,376**	**$169,475**	**$67,967**	**$196,505**	**$1,281,324**	**$1,984**

Exhibit 5-32. Case B31B owner's costs

Description	$/1,000	$/kW
Pre-Production Costs		
6 Months All Labor	$7,822	$12
1 Month Maintenance Materials	$1,432	$2
1 Month Non-Fuel Consumables	$1,211	$2
1 Month Waste Disposal	$12	$0
25% of 1 Months Fuel Cost at 100% CF	$3,729	$6
2% of TPC	$25,626	$40
Total	**$39,833**	**$62**
Inventory Capital		
60-day supply of fuel and consumables at 100% CF	$2,026	$3
0.5% of TPC (spare parts)	$6,407	$10
Total	**$8,432**	**$13**
Other Costs		
Initial Cost for Catalyst and Chemicals	$847	$1
Land	$300	$0
Other Owner's Costs	$192,199	$298
Financing Costs	$34,596	$54
Total Overnight Costs (TOC)	**$1,557,531**	**$2,412**
TASC Multiplier (IOU, 33 year)	1.093	
Total As-Spent Cost (TASC)	**$1,701,831**	**$2,635**

Exhibit 5-33. Case B31B initial and annual operating and maintenance costs

Case:	B31B	– 2x1 CT NGCC w/ CO_2			Cost Base:	Dec 2018
Plant Size (MW, net):	646	Heat Rate-net (Btu/kWh):		7,159	Capacity Factor (%):	85
Operating & Maintenance Labor						
Operating Labor				**Operating Labor Requirements per Shift**		
Operating Labor Rate (base):		38.50	**$/hour**	Skilled Operator:		1.0
Operating Labor Burden:		30.00	**% of base**	Operator:		3.3
Labor O-H Charge Rate:		25.00	**% of labor**	Foreman:		1.0
				Lab Techs, etc.:		1.0
				Total:		**6.3**
Fixed Operating Costs						
					Annual Cost	
					($)	**($/kW-net)**
Annual Operating Labor:					$2,776,628	$4.300
Maintenance Labor:					$9,738,060	$15.081
Administrative & Support Labor:					$3,128,672	$4.845
Property Taxes and Insurance:					$25,626,472	$39.686
Total:					**$41,269,832**	**$63.911**
Variable Operating Costs						
					($)	**($/MWh-net)**
Maintenance Material:					$14,607,089	$3.03798
Consumables						
	Initial Fill	**Per Day**	**Per Unit**	**Initial Fill**		
Water (/1000 gallons):	0	3,437	$1.90	$0	$2,025,824	$0.42133
Makeup and Waste Water Treatment Chemicals (ton):	0	10.2	$550	$0	$1,746,871	$0.36331
Ammonia (19 wt%, ton):	0	3.50	$300	$0	$325,963	$0.06779
SCR Catalyst (ft^3):	5,649	3.10	$150	$847,300	$144,041	$0.02996
CO_2 Capture System Chemicals[A]	Proprietary				$7,283,929	$1.51491
Triethylene Glycol (gal):	w/equip.	394	$6.80	$0	$830,606	$0.17275
Subtotal:				**$847,300**	**$12,357,234**	**$2.57005**
Waste Disposal						
SCR Catalyst (ft^3):	0	3.10	$2.50	$0	$2,401	$0.00050
Triethylene Glycol (gal):	0	394	$0.35	$0	$42,752	$0.00889
Amine Purification Unit Waste (ton)	0	6.11	$38.0	$0	$72,044	$0.01498
Thermal Reclaimer Unit Waste (ton)	0	0.543	$38.0	$0	$6,399	$0.00133
Subtotal:				**$0**	**$123,596**	**$0.02571**
Variable Operating Costs Total:				**$847,300**	**$27,087,919**	**$5.63373**
Fuel Cost						
Natural Gas (MMBtu):	0	110,955	$4.42	$0	$152,160,153	$31.64620
Total:				**$0**	**$152,160,153**	**$31.64620**

[A]CO_2 Capture System Chemicals includes Ion Exchange Resin, NaOH, and Cansolv Solvent

Exhibit 5-34. Case B31B LCOE breakdown

Component	Value, $/MWh	Percentage
Capital	25.0	34%
Fixed	8.6	12%
Variable	5.6	8%
Fuel	31.6	43%
Total (Excluding T&S)	**70.9**	**N/A**
CO_2 T&S	3.5	5%
Total (Including T&S)	**74.4**	**N/A**

5.3 NGCC Case Summary

The performance and cost results of the two NGCC plant configurations modeled in this report are summarized in Exhibit 5-35.

Exhibit 5-35. Estimated performance and cost results for NGCC cases

NGCC		
State-of-the-art 2017 F-Class		
	Case B31A	Case B31B
PERFORMANCE		
Nominal CO_2 Capture	**0%**	**90%**
Capacity Factor	**85%**	**85%**
Gross Power Output (MWe)	740	690
Auxiliary Power Requirement (MWe)	14	44
Net Power Output (MWe)	727	646
Coal Flow rate (lb/hr)	N/A	N/A
Natural Gas Flow rate (lb/hr)	205,630	205,630
HHV Thermal Input (kW_t)	1,354,905	1,354,905
Net Plant HHV Efficiency (%)	53.6%	47.7%
Net Plant HHV Heat Rate (Btu/kWh)	6,363	7,159
Raw Water Withdrawal, gpm	2,902	4,773
Process Water Discharge, gpm	657	1,670
Raw Water Consumption, gpm	2,245	3,103
CO_2 Emissions (lb/MMBtu)	119	12
CO_2 Emissions (lb/MWh-gross)	741	80
CO_2 Emissions (lb/MWh-net)	755	85
SO_2 Emissions (lb/MMBtu)	0.001	0.000
SO_2 Emissions (lb/MWh-gross)	0.006	0.000
NOx Emissions (lb/MMBtu)	0.004	0.003
NOx Emissions (lb/MWh-gross)	0.022	0.022
PM Emissions (lb/MMBtu)	0.002	0.000

NGCC		
State-of-the-art 2017 F-Class		
	Case B31A	Case B31B
PM Emissions (lb/MWh-gross)	0.012	0.000
Hg Emissions (lb/TBtu)	0.000	0.000
Hg Emissions (lb/MWh-gross)	0.00E-06	0.00E-06
COST		
Total Plant Cost (2018$/kW)	780	1,984
Bare Erected Cost	561	1,312
Home Office Expenses	112	262
Project Contingency	107	304
Process Contingency	0	105
Total Overnight Cost (2018$/MM)	692	1,558
Total Overnight Cost (2018$/kW)	952	2,412
Owner's Costs	172	428
Total As-Spent Cost (2018$/kW)	1,040	2,635
LCOE ($/MWh) (excluding T&S)	43.3	70.9
Capital Costs	9.9	25.0
Fixed Costs	3.6	8.6
Variable Costs	1.7	5.6
Fuel Costs	28.1	31.6
LCOE ($/MWh) (including T&S)	43.3	74.4
CO_2 T&S Costs	N/A	3.5

The following observations can be made regarding plant performance with reference to Exhibit 5-35:

- The efficiency of the NGCC case with no CO_2 capture is 53.6 percent (HHV basis). Gas Turbine World provides estimated performance for a state-of-the-art 2017 F-class turbine operated on natural gas in a combined cycle mode, and the reported efficiency is 60.3 percent (LHV basis). [125] Adjusting the result from this report to an LHV basis results in an efficiency of 59.4 percent.
- The efficiency penalty to add CO_2 capture in the NGCC case is 5.9 absolute percent (11.0 percent relative to non-capture). The efficiency reduction is caused primarily by the auxiliary loads of the capture system and CO_2 compression as well as the significantly increased cooling water requirement, which increases the auxiliary load of the CWPs and the cooling tower fan. CO_2 capture results in a 30 MW increase in auxiliary load compared to the non-capture case.

The components of TOC and overall TASC are shown for the two NGCC cases in Exhibit 5-36. The addition of CO_2 capture more than doubles the TOC of the NGCC plant. The process contingency included for the capture process totals $105/kW, which represents approximately 4 percent of the TOC.

Exhibit 5-36. Plant capital cost for NGCC cases

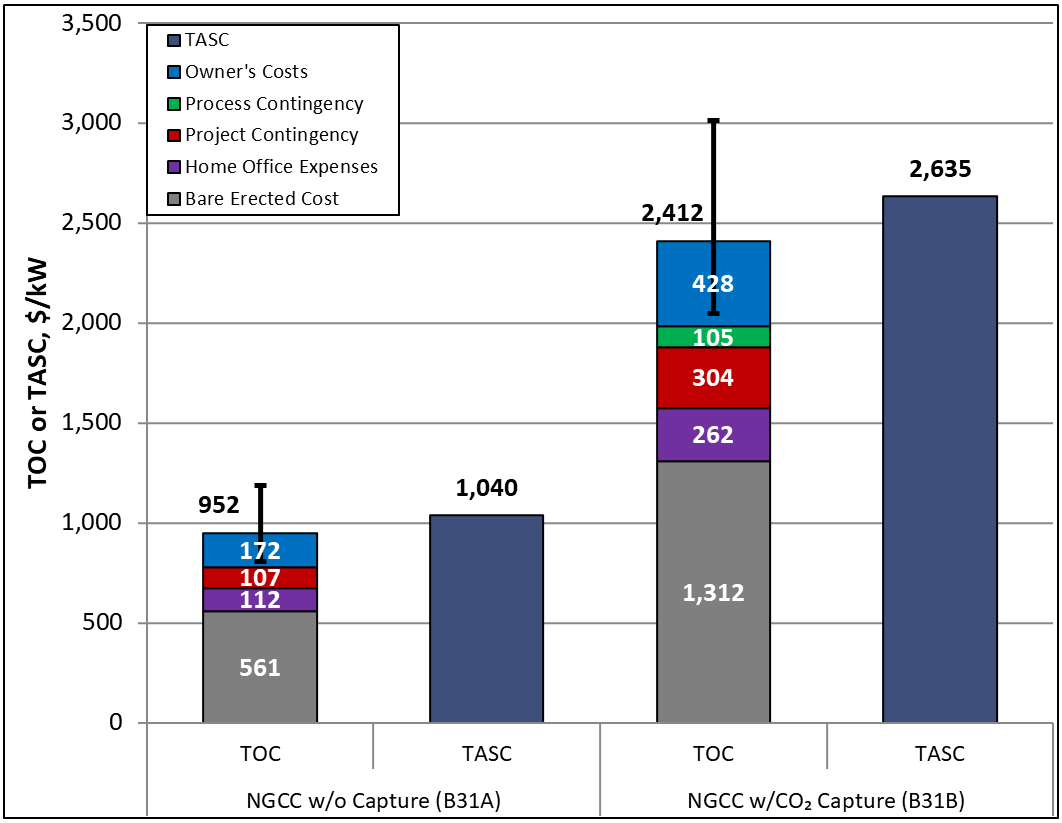

The NGCC capital cost estimate accuracy provides an AACE Class 4 range of -15 percent/+25 percent. The error bars included in Exhibit 5-36 represent the potential TOC range relative to the maximum and minimum of the capital cost uncertainty range. Similarly, the error bars included in Exhibit 5-37 represent the potential LCOE range relative to the maximum and minimum capital cost uncertainty ranges. The LCOE ranges presented are not reflective of other changes, such as variation in fuel price, labor price, CF, or other factors. As an example, if Case B31B's capital cost were determined to be at the high end of the uncertainty range (+25 percent), then the LCOE result would be $80.6/MWh. Conversely, if at the low end of the uncertainty range (-15 percent), the LCOE result would be $70.6/MWh.

Exhibit 5-37 shows that at the study natural gas price, the fuel represents a significant fraction of the total. The fuel component of LCOE represents 65 percent of the total in the non-capture case and 43 percent of the total in the CO_2 capture case. The CO_2 T&S component of LCOE is only 5 percent of the total in the CO_2 capture case.

Exhibit 5-37. LCOE of NGCC cases

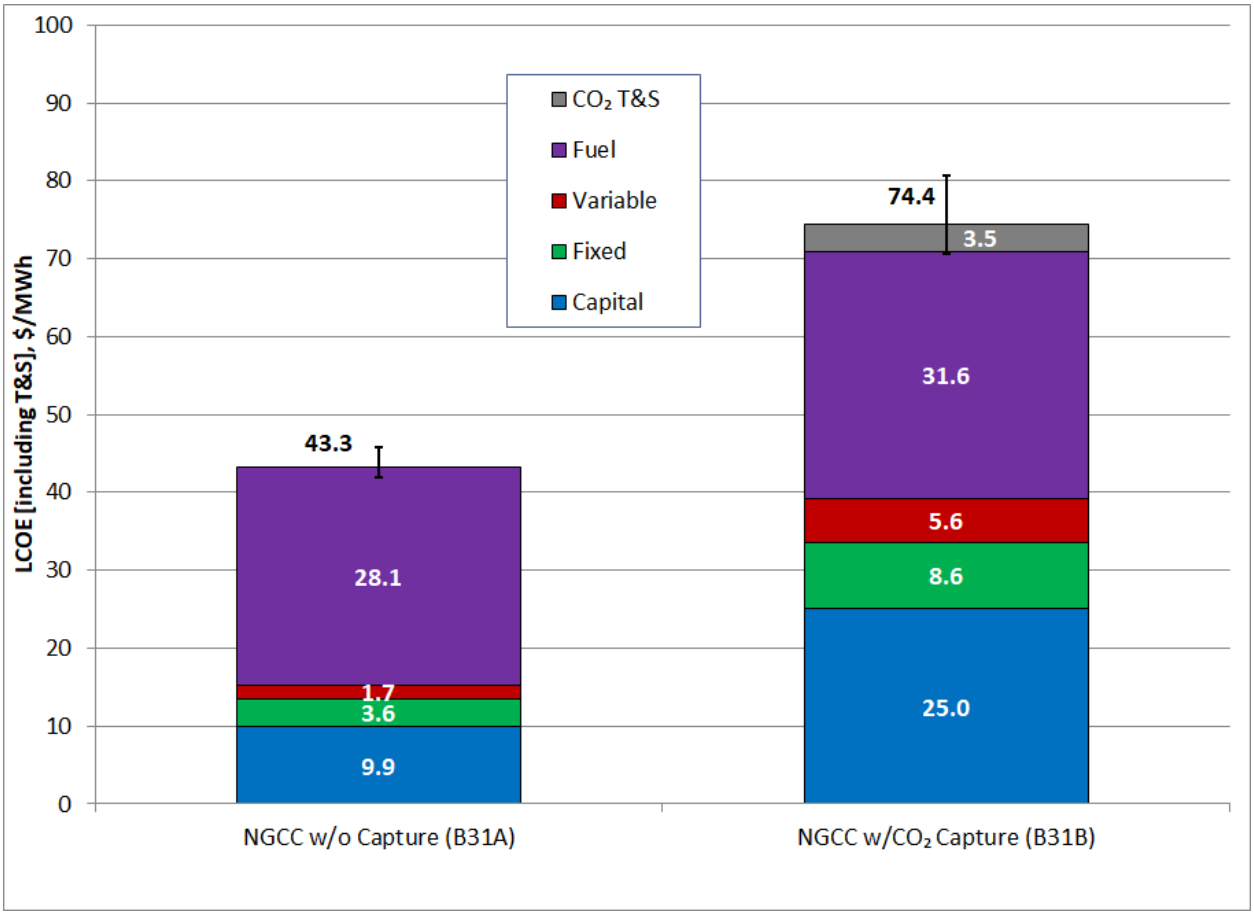

The sensitivity of NGCC LCOE to CF is shown in Exhibit 5-38. NGCC is relatively insensitive to CF but highly sensitive to fuel cost (as shown in Exhibit 5-39) because of the relatively small capital component. As the CF drops, the decrease in net production is nearly offset by a corresponding decrease in fuel cost. A 33 percent increase in natural gas price (from $4.42 to $5.88/MMBtu) results in an LCOE increase of 22 percent in the non-capture case and 14 percent in the CO_2 capture case. Because of the higher capital cost in the CO_2 capture case, the impact of fuel price changes is slightly diminished.

Exhibit 5-38. Sensitivity of LCOE to capacity factor in NGCC cases

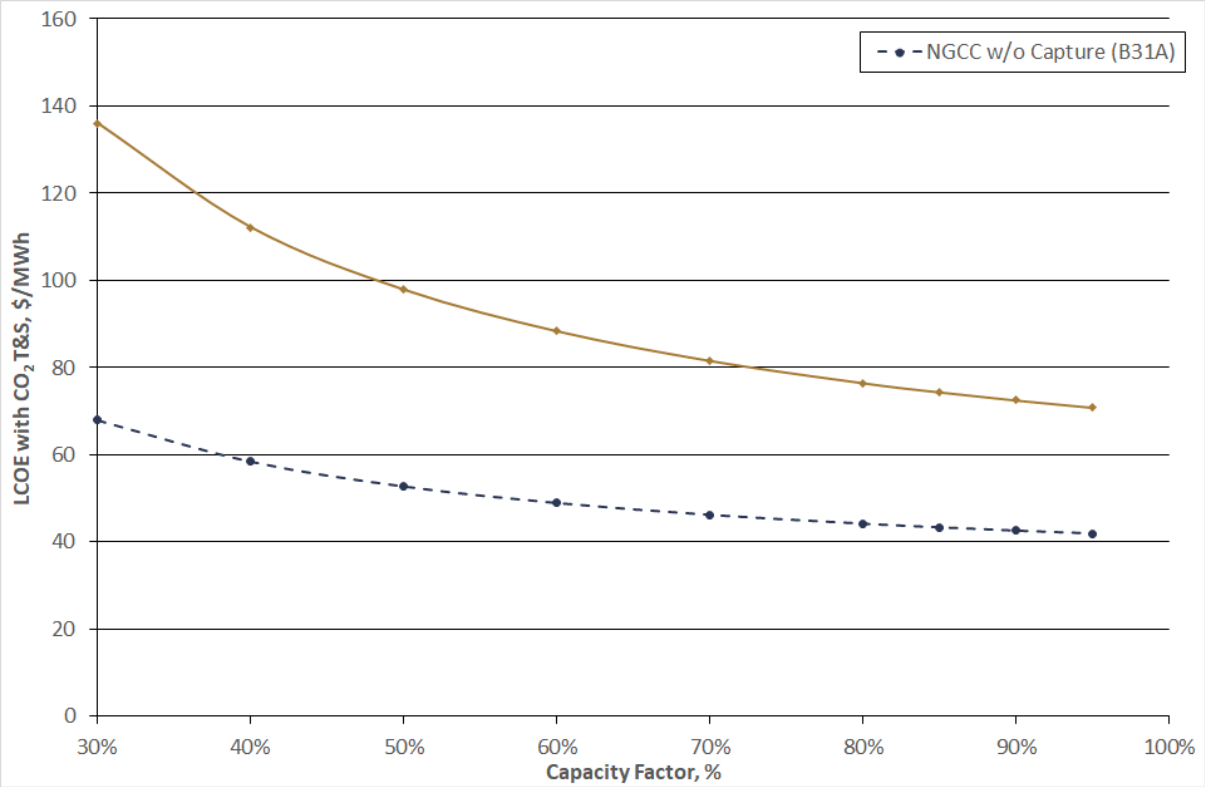

Exhibit 5-39. Sensitivity of LCOE to fuel price in NGCC cases

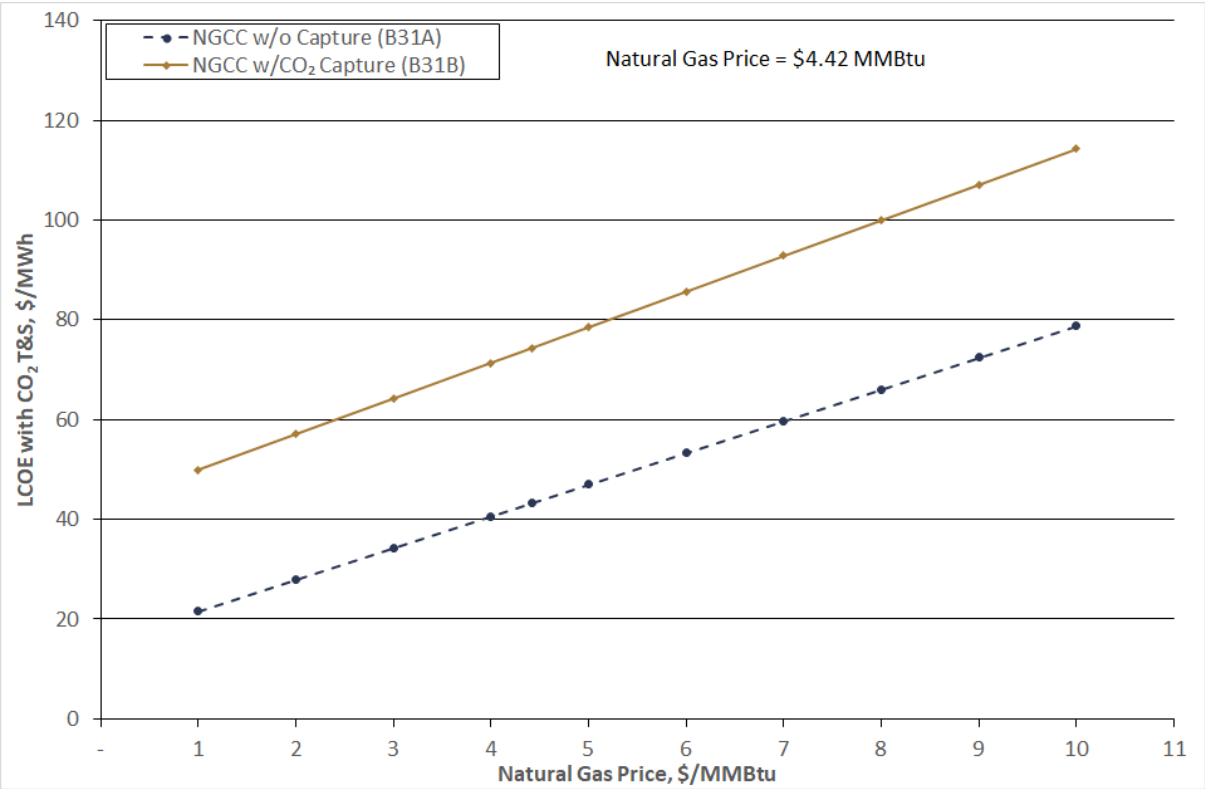

The breakeven CO_2 sales price and emissions penalty were calculated (the methodology and equations were provided in Section 2.7), and the results for the NGCC cases are presented in Exhibit 5-40. The breakeven CO_2 sales price is $80/tonne ($72/ton) and the breakeven CO_2 emissions penalty is $102/tonne ($93/ton) using NGCC without CO_2 capture as the reference.

Exhibit 5-40. Breakeven CO_2 sales price and emissions penalty in NGCC cases

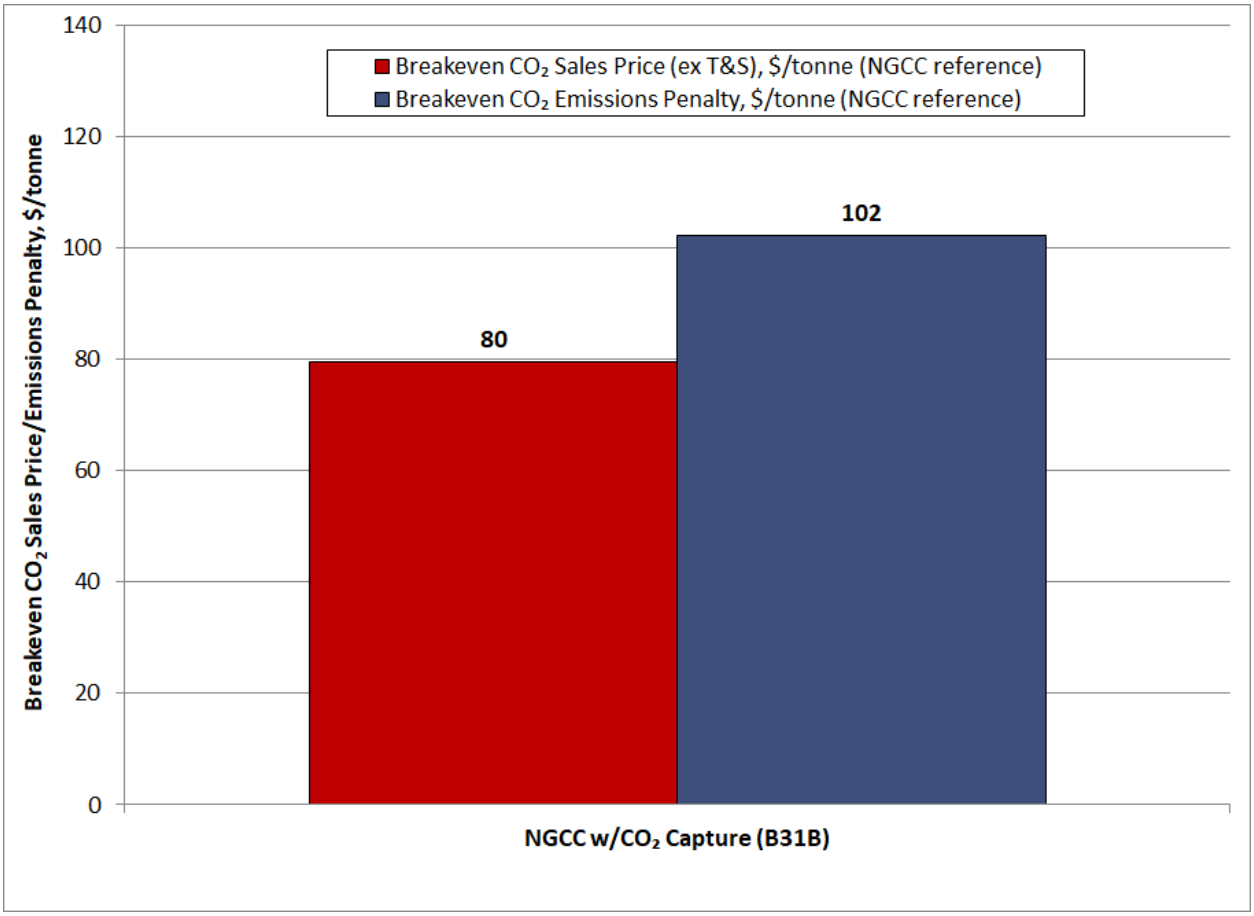

The normalized water withdrawal, process discharge and raw water consumption are shown in Exhibit 5-41.

Exhibit 5-41. Raw water withdrawal and consumption in NGCC cases

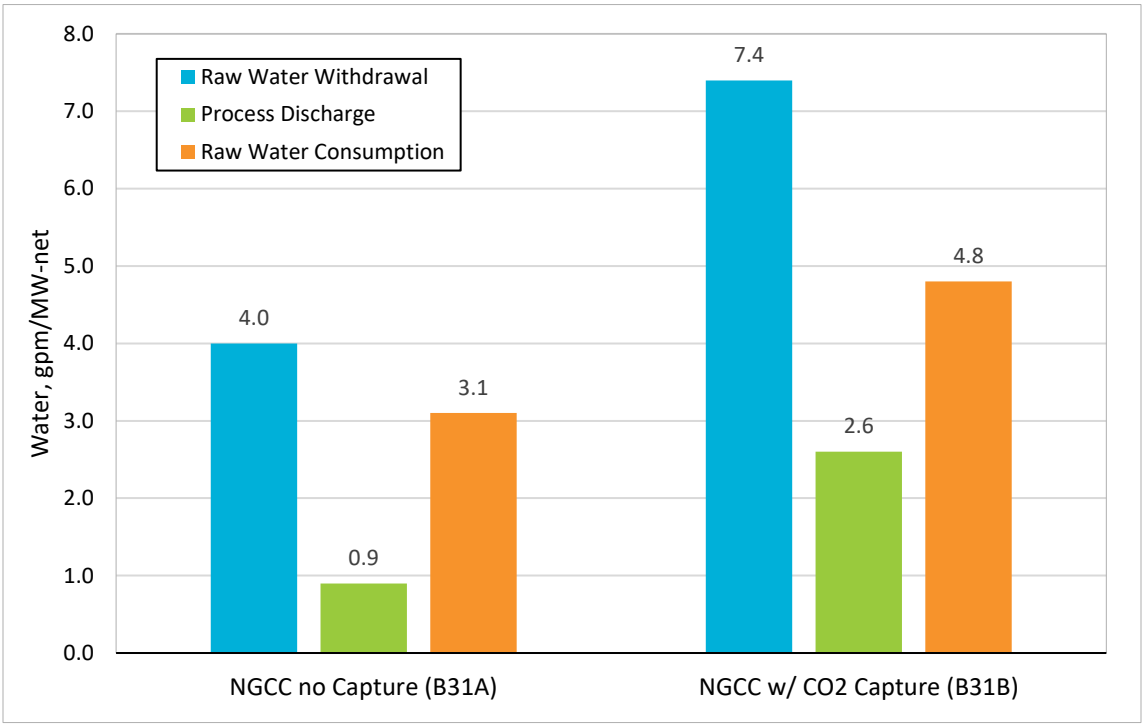

The following observations can be made:

- Normalized water withdrawal increases 85 percent and normalized raw water consumption 55 percent in the CO_2 capture case. The high cooling water demand of the capture process results in a large increase in cooling tower makeup requirements.
- Cooling tower makeup comprises approximately 99 percent of the raw water consumption in both NGCC cases. There is no internal recycle of water considered.

6 RESULTS ANALYSIS

Summaries of the individual technologies were provided in sections 3, 4, and 5. This section provides the results of all technologies for cross-comparison.

6.1 PERFORMANCE

Exhibit 6-1 provides a summary of the performance and environmental profile for all cases.

Exhibit 6-1. Performance summary and environmental profile for all cases

Case Name	Integrated Gasification Combined Cycle							Pulverized Coal Boiler				NGCC	
	Shell		E-Gas™ FSQ		GEP R+Q			SubC PC		SC PC		State-of-the-art 2017 F-Class	
	B1A	B1B	B4A	B4B	B5A	B5B	B5B-Q	B11A	B11B	B12A	B12B	B31A	B31B
PERFORMANCE													
Gross Power Output (MWe)	765	696	763	742	765	741	685	687	776	685	770	740	690
Auxiliary Power Requirement (MWe)	125	177	122	185	131	185	186	37	126	35	120	14	44
Net Power Output (MWe)	640	519	641	557	634	556	499	650	650	650	650	727	646
Coal Flow rate (lb/hr)	435,418	467,308	456,327	482,173	464,732	482,580	482,918	492,047	634,448	472,037	603,246	N/A	N/A
Natural Gas Flow rate (lb/hr)	N/A	N/A	N/A	N/A	N/A	N/A	N/A	N/A	N/A	N/A	N/A	205,630	205,630
HHV Thermal Input (kW_t)	1,488,680	1,597,710	1,560,166	1,648,535	1,588,902	1,649,926	1,651,082	1,682,291	2,169,156	1,613,879	2,062,478	1,354,905	1,354,905
Net Plant HHV Efficiency (%)	43.0	32.5	41.1	33.8	39.9	33.7	30.2	38.6	30.0	40.3	31.5	53.6	47.7
Net Plant HHV Heat Rate (Btu/kWh)	7,940	10,497	8,308	10,101	8,554	10,118	11,287	8,832	11,393	8,473	10,834	6,363	7,159
Raw Water Withdrawal (gpm)	4,127	5,080	4,357	5,197	4,799	5,512	6,286	6,485	10,634	6,054	9,911	2,902	4,773
Process Water Discharge (gpm)	922	1,075	944	1,103	1,033	1,123	1,218	1,334	3,090	1,242	2,893	657	1,670
Raw Water Consumption (gpm)	3,206	4,005	3,413	4,093	3,766	4,389	5,068	5,151	7,544	4,811	7,018	2,245	3,103
CO_2 Capture Rate (%)	0	90	0	90	0	90	90	0	90	0	90	0	90
CO_2 Emissions (lb/MMBtu)	200	21	199	20	197	20	20	202	20	202	20	119	12
CO_2 Emissions (lb/MWh-gross)	1,328	161	1,391	153	1,396	151	163	1,691	193	1,627	185	741	80
CO_2 Emissions (lb/MWh-net)	1,588	215	1,657	204	1,685	201	224	1,787	231	1,714	219	755	85
SO_2 Emissions (lb/MMBtu)	0.020	0	0.028	0	0.002	0	0	0.081	0	0.081	0	0.001	0
SO_2 Emissions (lb/MWh-gross)	0.130	0	0.192	0	0.015	0	0	0.674	0	0.648	0	0.006	0
NOx Emissions (lb/MMBtu)	0.059	0.049	0.056	0.049	0.054	0.048	0.048	0.084	0.073	0.087	0.077	0.004	0.003
NOx Emissions (lb/MWh-gross)	0.390	0.382	0.393	0.371	0.379	0.364	0.394	0.700	0.700	0.700	0.700	0.022	0.022
PM Emissions (lb/MMBtu)	0.007	0.007	0.007	0.007	0.007	0.007	0.007	0.011	0.009	0.011	0.010	0.002	0
PM Emissions (lb/MWh-gross)	0.047	0.056	0.050	0.054	0.050	0.054	0.058	0.090	0.090	0.090	0.090	0.012	0
Hg Emissions (lb/TBtu)	0.452	0.383	0.430	0.396	0.423	0.395	0.365	0.359	0.314	0.373	0.328	0	0
Hg Emissions (lb/MWh-gross)	3.00×10^{-6}	3.00×10^{-6}	3.00×10^{-6}	3.00×10^{-6}	3.00×10^{-6}	3.00×10^{-6}	3.00×10^{-6}	3.00×10^{-6}	3.00×10^{-6}	3.00×10^{-6}	3.00×10^{-6}	0	0

6.1.1 Energy Efficiency

A graph of the net plant efficiency (HHV basis) is provided in Exhibit 6-2. The primary conclusions that can be drawn are:

- The NGCC cases have the highest net efficiency of all the technologies, both without CO_2 capture (53.6 percent) and with CO_2 capture (47.7 percent). The next highest efficiency is the non-capture Shell IGCC, with an efficiency of 43.0 percent.
- For the IGCC cases, adding CO_2 capture results in a relative efficiency penalty of 16–24 percent (6–10 percentage points).
- For the PC cases, adding CO_2 capture results in a relative efficiency penalty of 22 percent (~9 percentage points).
- For the NGCC case, adding CO_2 capture results in a relative efficiency penalty of 11 percent (6 percentage points). The NGCC penalty is less than the PC penalty because:
  - Natural gas is less carbon intensive than coal (based on the fuel compositions used in this study, natural gas contains 32 lb carbon/MMBtu (13.7 kg/GJ) [HHV] of heat input and coal contains 55 lb/MMBtu (23.6 kg/GJ) [HHV]).
  - The NGCC non-capture plant is more efficient, thus there is less total CO_2 to capture and compress (NGCC non-capture CO_2 emissions are approximately 54–56 percent lower than the PC cases) when normalized to equivalent net power outputs.
  - These effects are offset slightly by the lower concentration of CO_2 in the NGCC flue gas (4 percent versus 13 percent for PC).

Exhibit 6-2. Net plant efficiency (HHV basis)

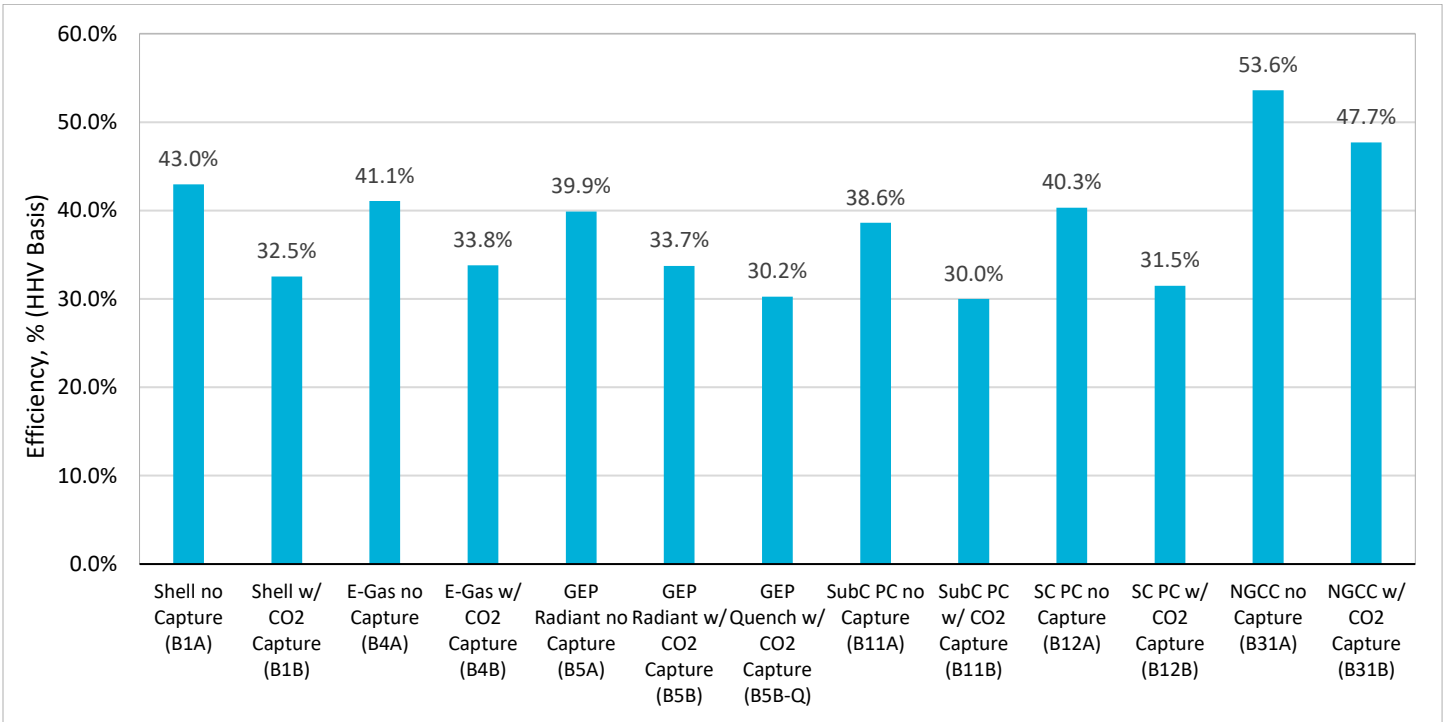

Sankey diagrams for select IGCC (GEP), PC (SC), and NGCC cases, both with and without CO_2 capture, are shown in Exhibit 6-3 through Exhibit 6-5. Discussion and cross-technology comparisons follow the exhibits.

Exhibit 6-3. GEP IGCC Sankey diagram with and without CO_2 capture

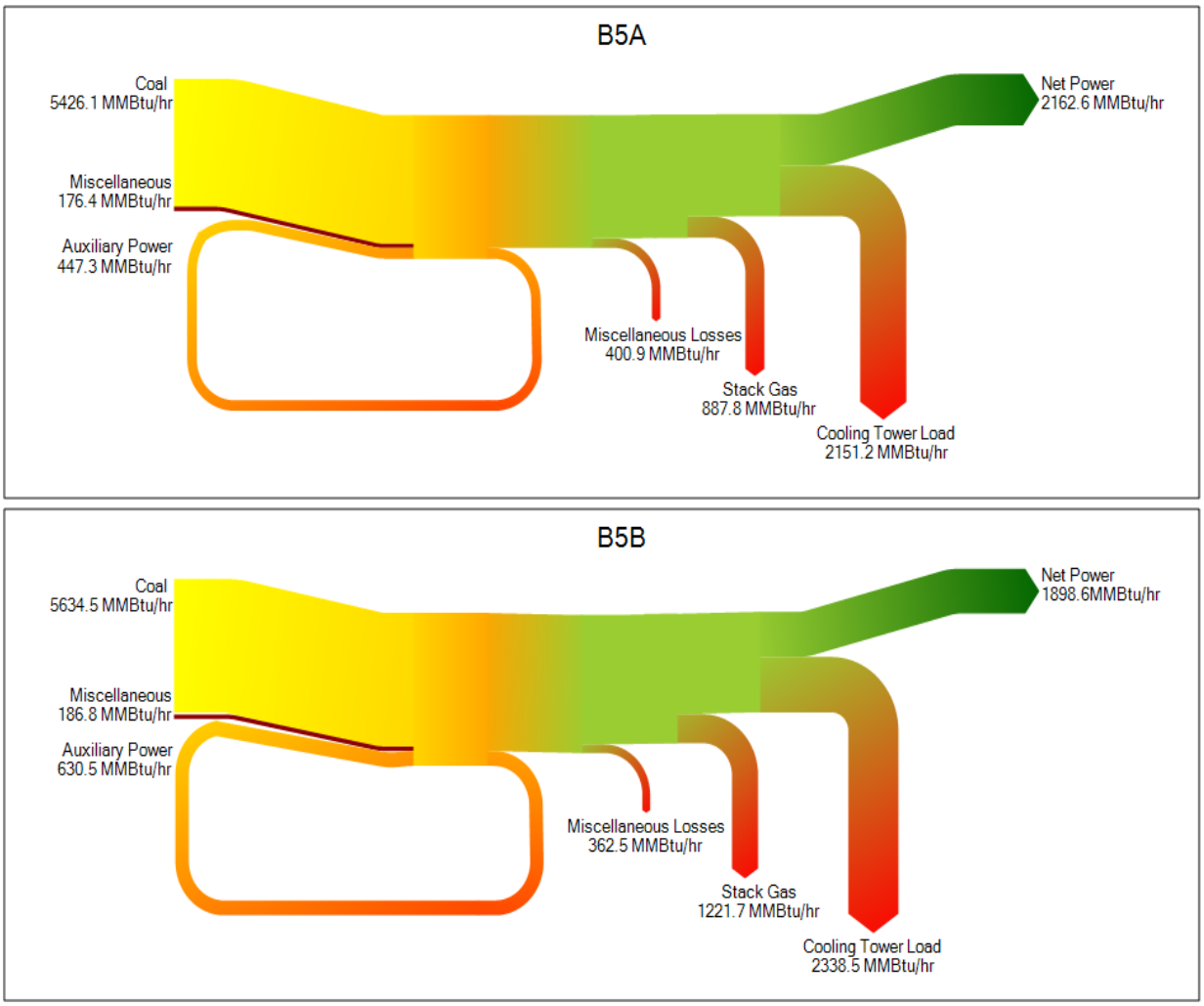

Exhibit 6-4. SC PC Sankey diagram with and without CO_2 capture

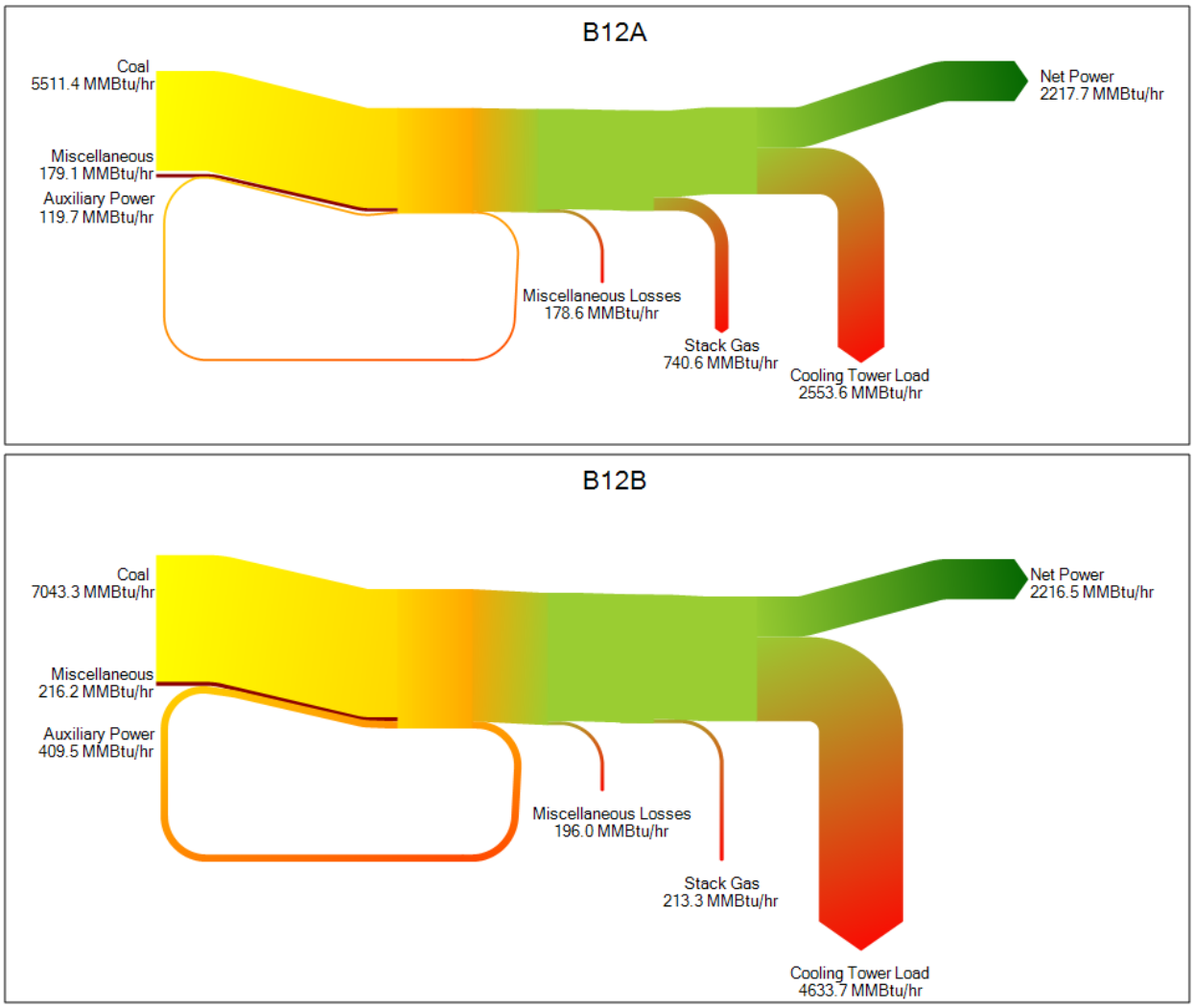

Exhibit 6-5. NGCC Sankey diagram with and without CO_2 capture

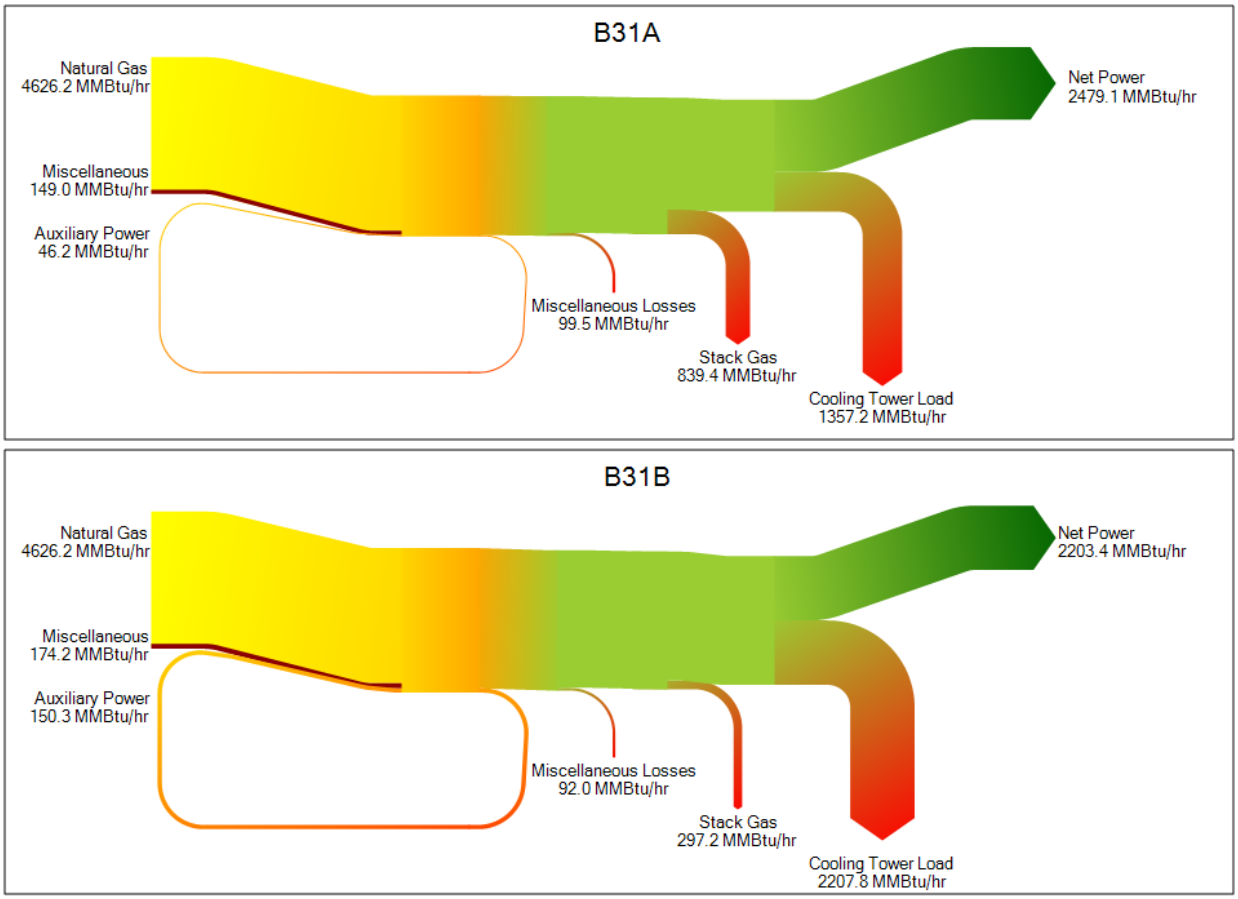

The miscellaneous losses category is used to simplify the diagrams for the numerous, but relatively small, heat outlet streams, and includes different items across the three technology types. In IGCC cases, this category includes miscellaneous process steam, slag, sulfur, blowdown streams, ambient losses, CO_2 product, and others. In PC cases this category includes bottom and fly ash, sulfur, gypsum, blowdown streams, deaerator vent, ambient losses, CO_2 product, and others. In NGCC cases this category includes deaerator vent, ambient losses, CO_2 product, and others.

The NGCC cases considered in this study result in the highest net plant efficiencies. The net plant efficiencies of the non-capture PC and IGCC cases, and capture PC and IGCC cases, are relatively tightly grouped. In comparing the Sankey diagram results of PC and IGCC non-capture cases, several observations can be made:

- The additional sub-systems required by IGCC to facilitate the gasification of coal to power the Brayton topping cycle increase the auxiliary load requirements, as compared to PC.
- The size of the Rankine cycle (output basis) in PC plants is larger than IGCC or NGCC, which contributes to the larger cooling tower load observed in PC plants.

- The miscellaneous losses are larger for IGCC as compared to PC or NGCC, driven primarily by larger losses in the slag, sulfur, and blowdown streams of IGCC cases as compared to PC cases.

These same observations made for non-capture cases can be made in comparing the three technologies with CO_2 capture; however, the magnitude of the comparison changes. For example, the impact of the Rankine cycle output on cooling tower load is still present, but the addition of CO_2 capture imparts additional load on the cooling tower, thus creating an even larger cooling tower load for PC cases with capture as compared to IGCC or NGCC cases with capture.

6.1.2 Environmental Emissions

Estimated emissions of Hg, HCl, PM, NOx, and SO_2 are all at or below the applicable regulatory limits currently in effect for all cases. Emissions results for each case were provided in Exhibit 6-1.

Natural gas does not contain Hg, PM, or HCl, which makes its environmental profile more attractive compared to PC and IGCC cases. In this report, it was assumed that the only sulfur present in natural gas is from the addition of the odorant, mercaptan. This results in an SO_2 emission rate below the regulatory limits without any further control.

Systems required to bring the cases considered in this report into compliance with the ELG rule represent new sub-systems as compared to previous versions of this study. For the PC cases, the FGD wastewater blowdown flow rate range to be treated by the SDE spans 208–276 lpm (55–73 gpm). The approximate performance impact of implementing the SDE across the four PC cases is a 0.25–0.27 percentage point (absolute) decrease in the HHV net plant efficiency. This is due primarily to the diversion of warm flue gas away from the air preheater and to the evaporator, with an additional minor impact resulting from the small auxiliary load required by the SDE. For the IGCC cases, the syngas scrubber blowdown flow rate range to be treated by the vacuum flash, brine concentrator, and crystallizer ZLD system spans 1,050–2,400 lpm (277–635 gpm), with Case B5B-Q having the highest flow rate for treatment. The other six IGCC cases span a tighter range of 1,050–1,257 lpm (277–332 gpm). The approximate performance impact of implementing the ZLD system across the seven IGCC cases is a 0.10–0.20 percentage point (absolute) decrease in the HHV net plant efficiency, with six of the seven IGCC cases falling at or around a 0.10 absolute percentage point decrease. This is due primarily to the steam extraction necessary, as well as the auxiliary load for the total ZLD system, which is significantly larger than the auxiliary load required for the SDE applied in PC cases.

6.1.3 Water Use

Three water values are presented for each technology in Exhibit 6-6: raw water withdrawal, process discharge, and raw water consumption. Each value is normalized by net output.

Exhibit 6-6. Raw water withdrawal and consumption

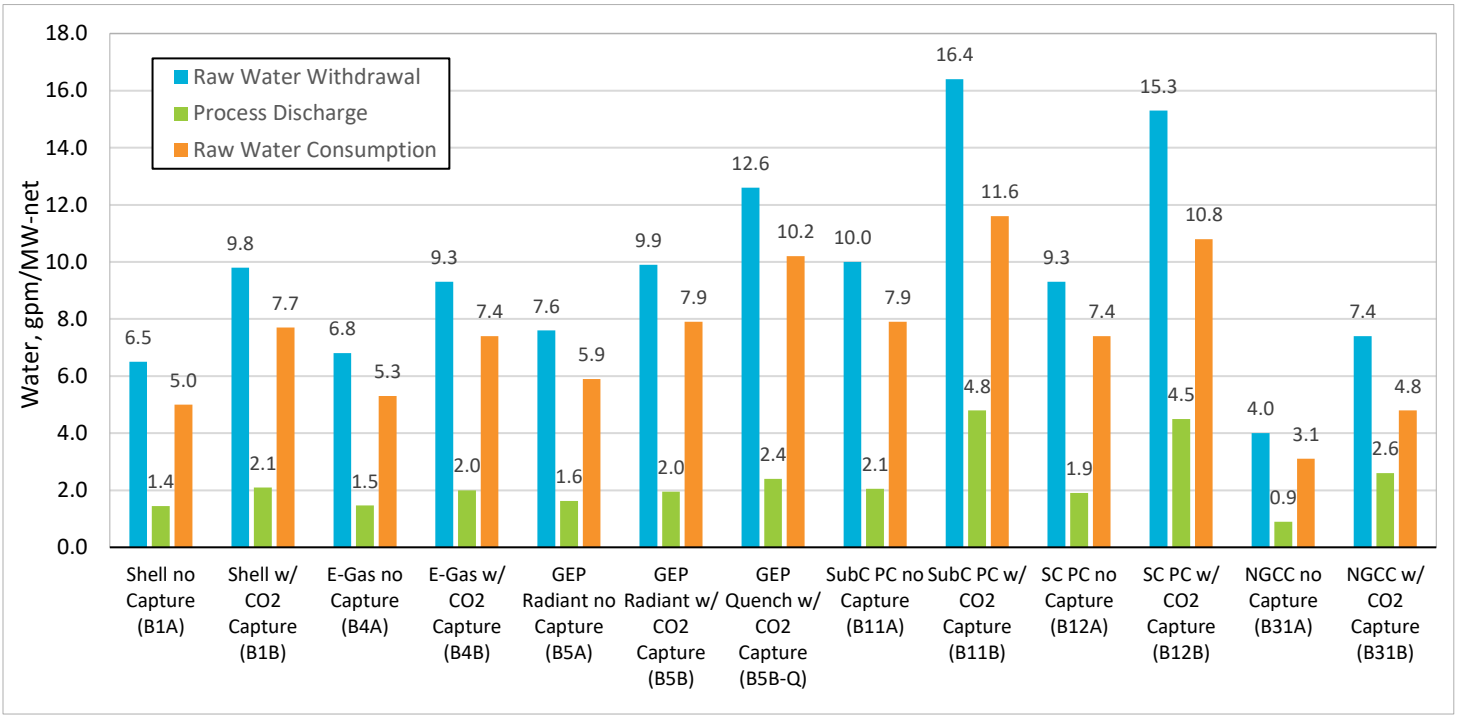

The primary conclusions that can be drawn are:

- NGCC has the lowest raw water consumption of all cases for both non-capture and CO_2 capture cases. The results are expected given the higher steam turbine output in the PC and IGCC cases, which results in higher condenser duties, higher cooling water flows, and, ultimately, higher cooling water makeup.
- CO_2 capture imposes a significant water demand on all technologies. The post-combustion capture technology has a significant cooling water demand that results in increased raw water consumption because of increased cooling tower blowdown and cooling tower evaporative losses. Raw water consumption increases by 55 percent for the NGCC case, 46 percent for the PC cases, and 34–73 percent for the IGCC cases.

6.2 Cost Results

Exhibit 6-7 provides a summary of the costs for all cases.

Exhibit 6-7. Cost summary for all cases

Case Name	IGCC[A]							PC[A]				NGCC[A]	
	Shell		E-Gas™ FSQ		GEP R+Q			SubC PC		SC PC		State-of-the-art 2017 F-Class	
	B1A	B1B	B4A	B4B	B5A	B5B	B5B-Q	B11A	B11B	B12A	B12B	B31A	B31B
COST													
Total Plant Cost (2018$/kW)	3,824	6,209	3,395	5,177	3,822	5,240	4,855	2,011	3,756	2,099	3,800	780	1,984
Bare Erected Cost	2,674	4,279	2,386	3,588	2,679	3,631	3,369	1482	2641	1548	2677	561	1312
Home Office Expenses	401	642	358	538	402	545	505	259	462	271	469	112	262
Project Contingency	554	923	499	786	557	783	757	269	526	280	531	107	304
Process Contingency	195	366	151	266	184	281	224	0	127	0	123	0	105
Total Overnight Cost (2018$M)	2,991	3,964	2,664	3,555	2,972	3,589	2,990	1,611	2,991	1,678	3,023	692	1,558
Total Overnight Cost (2018$/kW)	4,675	7,632	4,157	6,384	4,690	6,450	5,991	2,478	4,604	2,582	4,654	952	2,412
Owner's Costs	851	1,423	763	1,207	868	1,210	1,136	467	848	484	854	172	428
Total As-Spent Cost (2018$/kW)	5,397	8,810	4,799	7,370	5,414	7,446	6,916	2,861	5,315	2,981	5,372	1,040	2,635
LCOE ($/MWh) (excluding T&S)	105.8	166.5	97.5	143.1	107.9	144.2	139.4	63.9	106.3	64.4	105.3	43.3	70.9
Capital Costs	54.5	88.9	48.4	74.4	54.7	75.2	69.8	27.2	50.5	28.3	51.0	9.9	25.0
Fixed Costs	20.0	31.9	18.0	26.9	20.0	27.2	25.6	9.1	16.0	9.5	16.1	3.6	8.6
Variable Costs	13.6	22.3	12.6	19.4	14.1	19.3	18.9	7.9	14.5	7.7	14.0	1.7	5.6
Fuel Costs	17.7	23.4	18.5	22.5	19.0	22.5	25.1	19.7	25.4	18.9	24.1	28.1	31.6
LCOE ($/MWh) (including T&S)	105.8	175.0	97.5	151.3	107.9	152.3	148.5	63.9	115.7	64.4	114.3	43.3	74.4
CO_2 T&S Costs	0.0	8.6	0.0	8.2	0.0	8.1	9.1	0.0	9.4	0.0	8.9	0.0	3.5
Breakeven CO_2 Sales Price (ex. T&S), $/tonne[B]	N/A	119.4	N/A	96.0	N/A	98.1	82.7	N/A	44.6	N/A	45.7	N/A	79.6
Breakeven CO_2 Emissions Penalty (incl. T&S), $/tonne[B]	N/A	162.7	N/A	126.9	N/A	128.3	124.4	N/A	76.3	N/A	73.5	N/A	102.2

[A]Financing structures are presented in NETL's "QGESS: Cost Estimation Methodology for NETL Assessments of Power Plant Performance" [4]
[B]Both the breakeven CO_2 sales price and emissions penalty were calculated based on the non-capture SC PC Case B12A for all coal cases, and the non-capture NGCC Case B31A for natural gas cases.

6.2.1 TOC and TASC

In Exhibit 6-8, the normalized components of TOC and overall TASC are shown for each technology. As described previously in the technology summary sections, each technology carries with it a different uncertainty range for the capital cost estimate. The error bars included in Exhibit 6-8 represent the potential TOC range relative to the maximum and minimum of the capital cost uncertainty range.

The following observations can be made:

- E-Gas™ has the lowest TOC cost among the non-capture IGCC cases. The E-Gas™ technology has several features that lend to the lower cost, such as:
    - The firetube syngas cooler is much smaller and less expensive than a radiant section. E-Gas™ can use a firetube boiler because the two-stage design reduces the syngas temperature (slurry quench) into a range where a radiant cooler is not needed.
    - The firetube syngas cooler sits next to the gasifier instead of above or below it, which reduces the height of the main gasifier structure. The E-Gas™ proprietary slag removal system—used instead of lock hoppers below the gasifier—also contributes to the lower structure height.
- The GEP Quench gasifier (GEP Radiant is 8 percent greater than GEP Quench) is the low-cost technology in the IGCC CO_2 capture cases, with E-Gas™ normalized TOC approximately 7 percent higher and Shell approximately 27 percent higher.
- Based on TOC in $/kW, NGCC capital costs are approximately 37 percent and 52 percent of the PC capital costs for non-capture and capture cases, respectively.
- The NGCC cost advantage over PC is partially enabled by the lack of emission control equipment necessitated for the adherence to current regulations.
- The addition of CO_2 capture technology significantly impacts all technologies. The TOC increase for the addition of CO_2 capture technology in IGCC cases spans the range of 28–63 percent. The TOC increases by 86 percent for SubC PC and 80 percent for SC PC due to the addition of capture technology. The addition of capture to NGCC demonstrates the largest increase to TOC of all cases considered, a 153 percent increase.

Exhibit 6-8. Plant capital costs

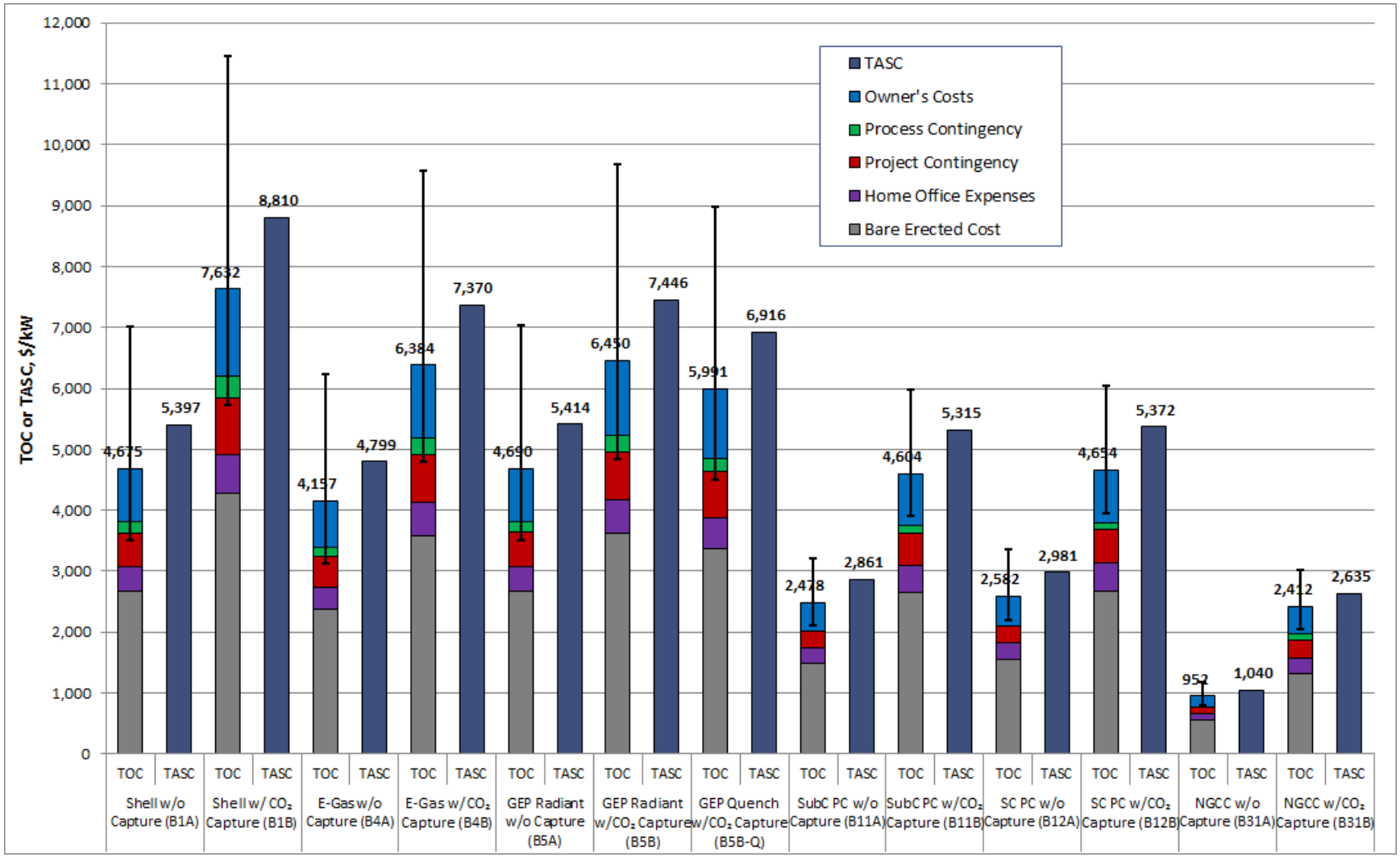

6.2.2 LCOE

A graph of the LCOE by cost component is provided in Exhibit 6-9. As described previously in the technology summary sections, each technology carries with it a different uncertainty range for the capital cost estimate. The error bars included in Exhibit 6-9 represent the potential LCOE range relative to the maximum and minimum of the capital cost uncertainty range. The LCOE ranges presented are not reflective of other parameter changes, such as variation in fuel price, labor price, CF, or other factors. The primary observations that can be made are:

- In the non-capture IGCC cases the E-Gas™ gasifier has the lowest LCOE, but the differential with Shell is reduced (relative to the normalized TOC comparison) primarily because of the higher efficiency of the Shell gasifier. The Shell LCOE is 8 percent higher than E-Gas™ (compared to 13 percent higher normalized TOC). The GEP gasifier LCOE is about 11 percent higher than E-Gas™.
- In the IGCC capture cases, the order of the GEP Radiant and Shell gasifiers is reversed, with GEP Quench being the lowest LCOE option. The range is from $139.4/MWh for GEP Quench to $166.5/MWh for Shell with E-Gas™ and GEP Radiant intermediate at $143.1/MWh and $144.2/MWh, respectively, excluding T&S. The LCOE CO_2 capture premium for the cases averages 50 percent (range of 38-65 percent.
- LCOE is dominated by the capital cost component in IGCC and PC cases. In IGCC, capital costs account for at least 50 percent of the total LCOE (excluding T&S costs). In PC cases, capital costs account for 43–45 percent of the LCOE. In NGCC cases, the capital component is a smaller LCOE contributor, representing 21–33 percent of the LCOE.
- Fuel costs represent the largest portion of the LCOE in NGCC cases, ranging from 43 to 65 percent of the total LCOE (excluding T&S costs). In PC cases, the fuel contribution is less, at 21–31 percent of the LCOE. In IGCC cases, the fuel contribution is the smallest, ranging from 13 to 19 percent of the LCOE.
- The CO_2 T&S LCOE component represents 5–8 percent of the total LCOE across the cases with CO_2 capture considered in this study.

Exhibit 6-9. LCOE by cost component

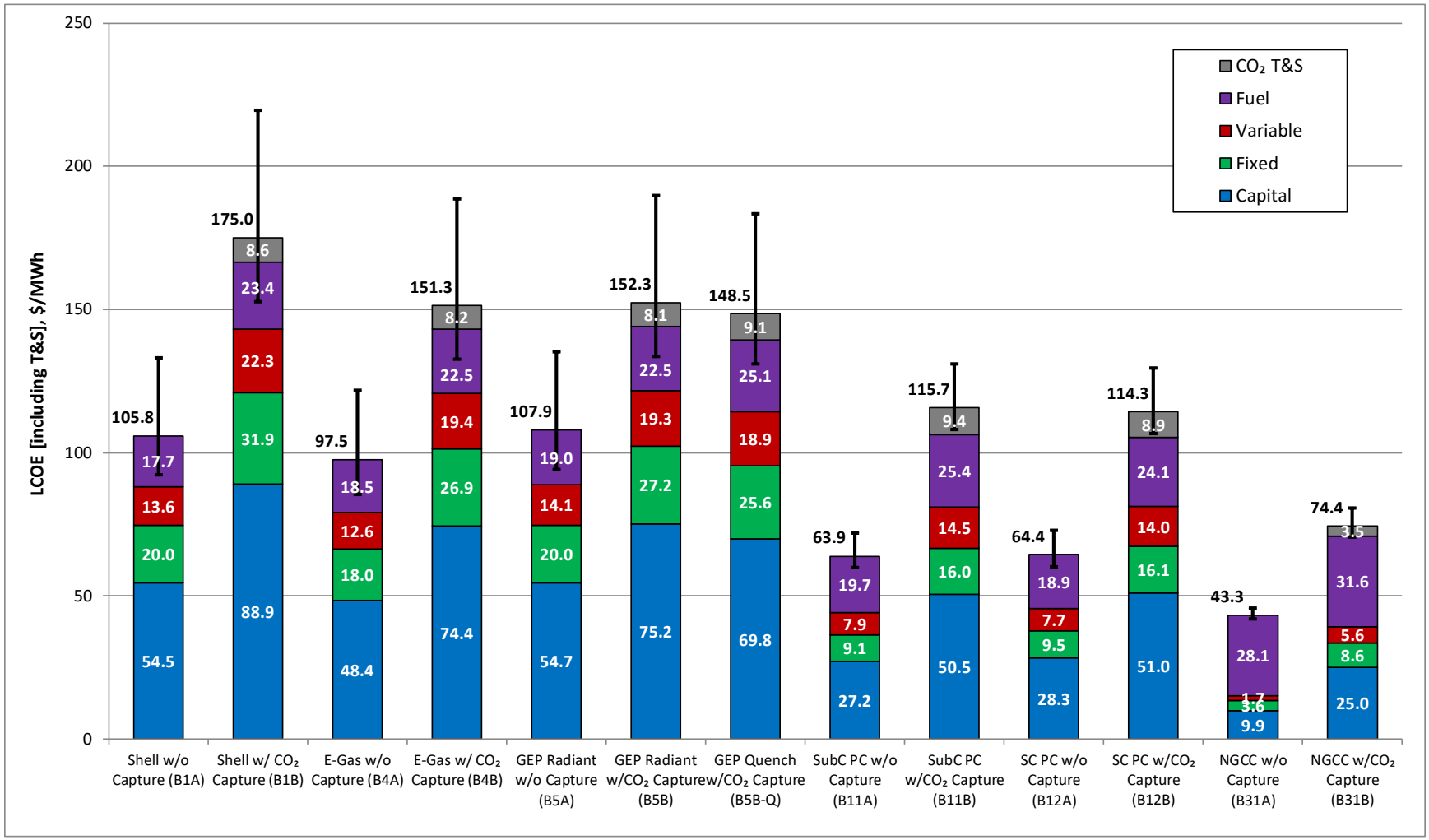

*Financing structures are presented in NETL's "QGESS: Cost Estimation Methodology for NETL Assessments of Power Plant Performance" [4]

6.2.3 CO_2 Emission Price Impact

If future legislation assigns a cost to carbon emissions, all the technologies examined in this report will become more expensive. The technologies without carbon capture will be impacted to a larger extent than those with carbon capture, and coal-based technologies will be impacted more than natural gas-based technologies.

The breakeven CO_2 emissions penalty is shown in Exhibit 6-10 as the intersection of the CO_2 capture PC and IGCC cases lines with the line for the SC PC non-capture case and the intersection of the NGCC CO_2 capture case line with the line for the NGCC non-capture case. For example, the breakeven CO_2 emissions penalty is $74–76/tonne ($67–69/ton) for PC, $124–$163/tonne ($112–148/ton) for IGCC, and $102/tonne ($93/ton) for NGCC.

The curves in Exhibit 6-10 represent the study design conditions (CF) and fuel prices used for each technology; namely an 80 or 85 percent CF (IGCC or PC/NGCC) and $2.11/GJ ($2.23/MMBtu) for coal and $4.19/GJ ($4.42/MMBtu) for natural gas.

Exhibit 6-10. Impact of carbon emissions price on study technologies

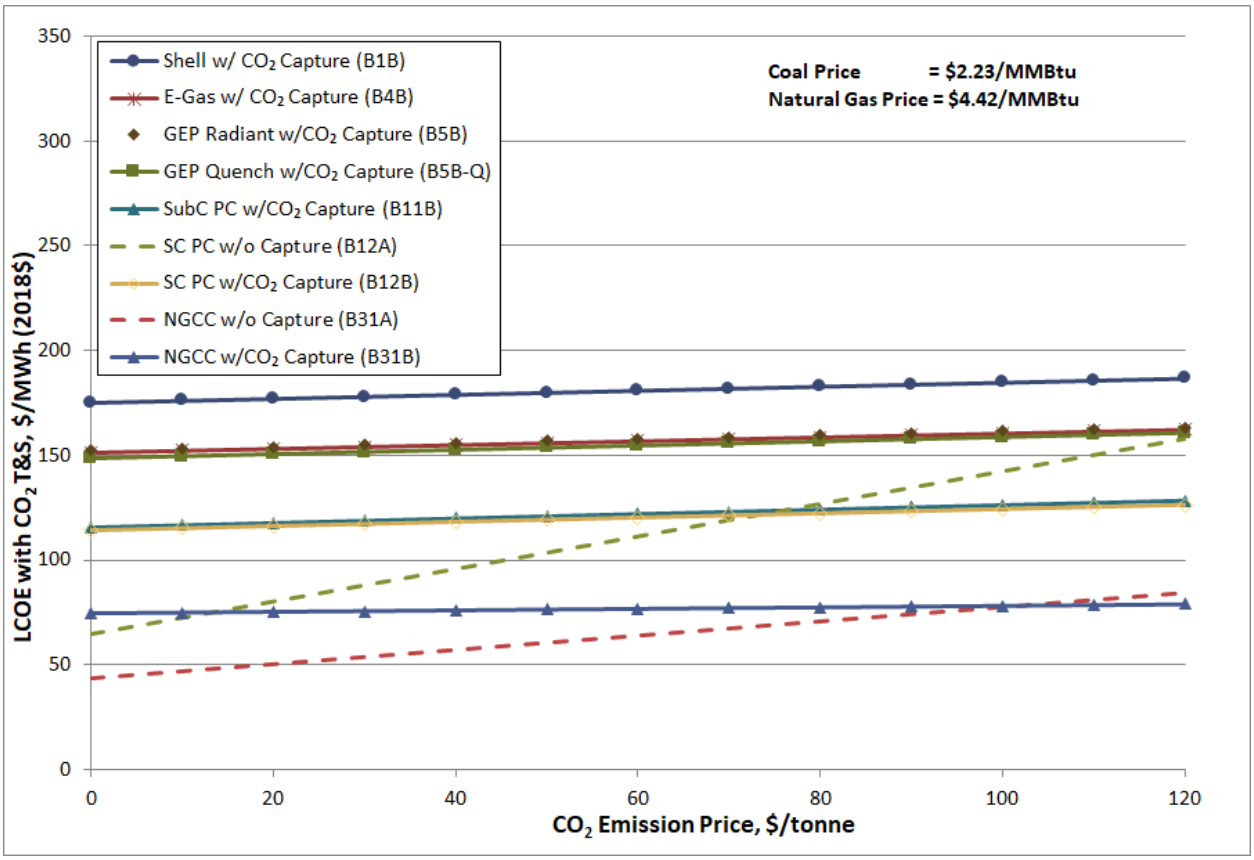

The impact of CO_2 emissions price and natural gas price and the implications on the competitiveness of the capture technologies can also be considered in a "phase diagram" type plot, as shown in Exhibit 6-11. The exhibit only considers the competitiveness of NGCC and PC

cases, as IGCC has been demonstrated to consistently be a higher cost option. The lines in the plot represent cost parity between different pairs of technologies.

Exhibit 6-11. Lowest cost power generation options comparing NGCC and PC

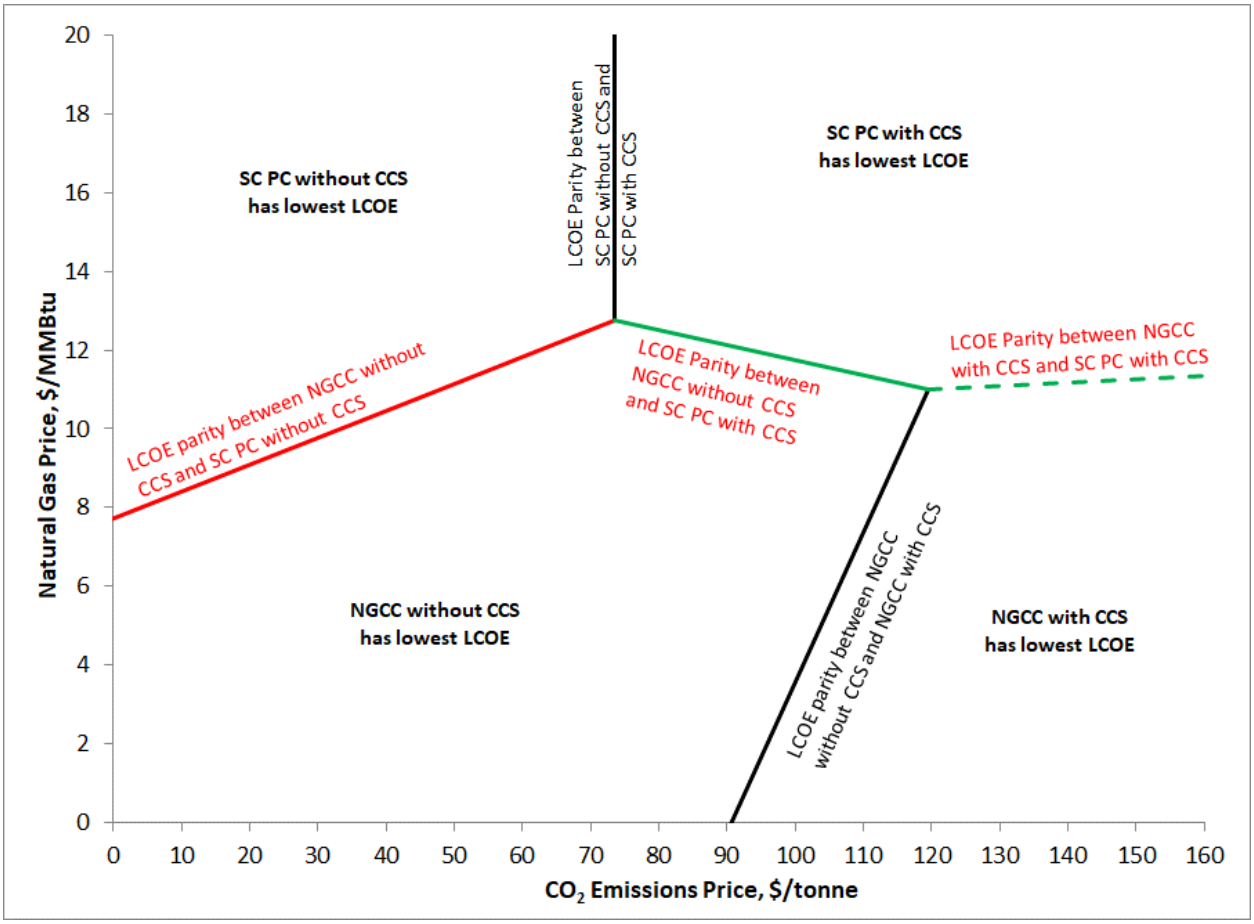

The plot demonstrates the following points:

- Non-capture plants are the low-cost option below a CO_2 price of $74/tonne ($67/ton).
- NGCC is always preferred when natural gas prices are below $10.5/MMBtu (and a CF of 85 percent).
- Coal plants are always preferred when natural gas prices are above $12.2/MMBtu.

6.2.4 CO_2 Sales Price Impact

Sale of the captured CO_2 for utilization and storage in CO_2 enhanced oil recovery (EOR) has the potential to provide a revenue stream for capture plant configurations. The plant gate CO_2 sales price will ultimately depend on a number of factors including plant location and crude oil prices. The breakeven CO_2 sales price represents the minimum CO_2 plant gate sales price that will incentivize carbon capture relative to a defined reference non-capture plant.

The breakeven CO_2 sales price is shown in Exhibit 6-12 as the intersection of the CO_2 capture PC and IGCC case lines with the line for the SC PC non-capture case, and the intersection of the NGCC CO_2 capture case line with the line for the NGCC non-capture case. For example, when looking at the exhibit, the breakeven CO_2 sales price is $45–46/tonne ($40–42/ton) for PC, $83–119/tonne ($75–108/ton) for IGCC, and $80/tonne ($72/ton) for NGCC.

The curves in Exhibit 6-12 represent the study design conditions (CF) and fuel prices used for each technology; namely an 80 or 85 percent CF (IGCC or PC/NGCC) and $2.11/GJ ($2.23/MMBtu) for coal and $4.19/GJ ($4.42/MMBtu) for natural gas.

Exhibit 6-12. Impact of carbon sales price on study technologies

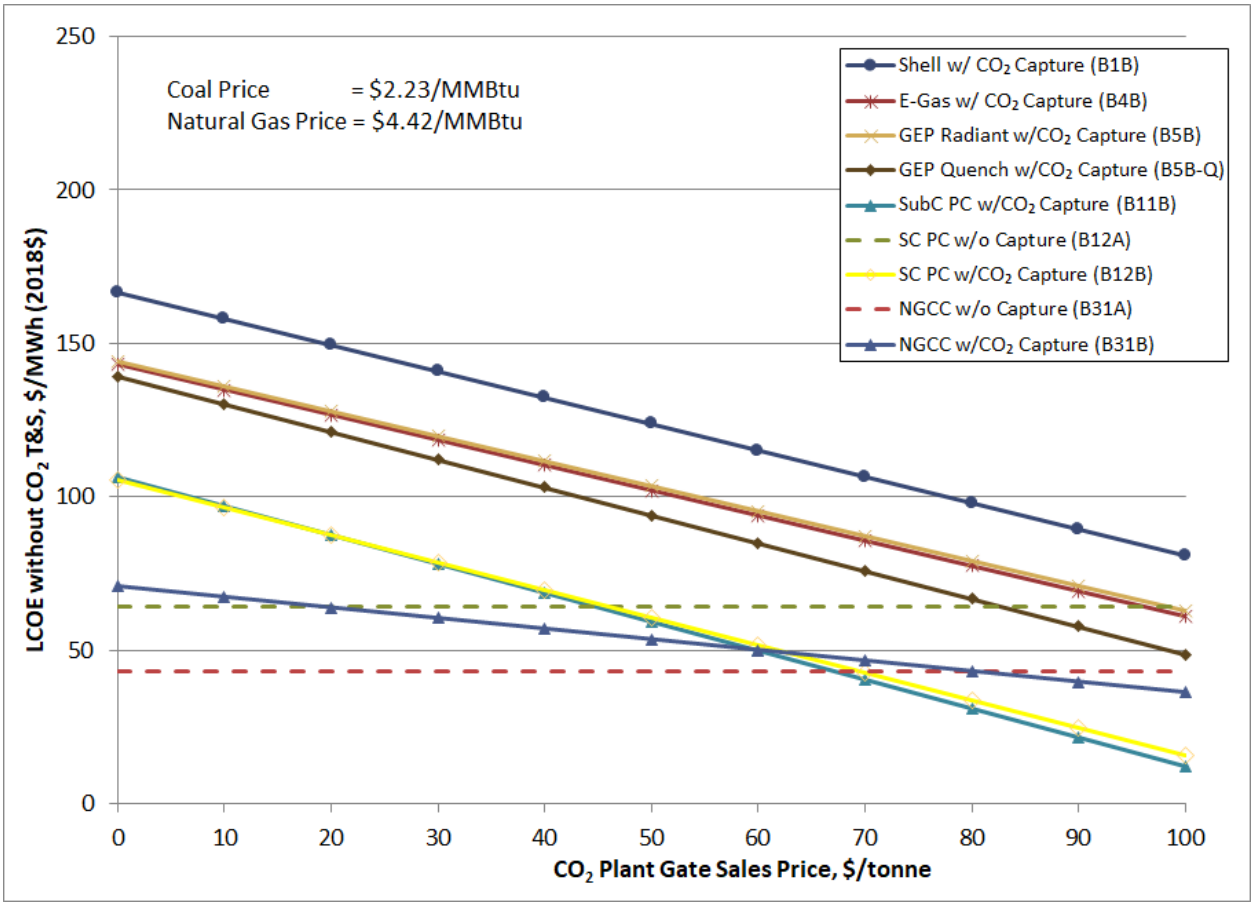

One of the important conclusions that can be drawn from the plot is that at a CO_2 sales price of approximately $60/tonne ($55/ton), the cost of NGCC with CO_2 capture is equal to that of the SubC PC and SC PC with CO_2 capture cases. Above $60/tonne, the PC capture cases are lower cost options than the NGCC capture case, and above approximately $68/tonne ($62/ton), the PC capture cases are a lower cost option that the NGCC case without capture.

As with CO_2 emission pricing shown previously, the impact of CO_2 sales price and natural gas price and the implications on the competitiveness of the capture technologies can also be considered in a "phase diagram" type plot, as shown in Exhibit 6-13. The exhibit only considers the competitiveness of NGCC and PC cases, as IGCC has been demonstrated to consistently be a

higher cost option. The lines in the plot represent LCOE parity between different pairs of technologies.

Exhibit 6-13. Lowest cost power generation options comparing NGCC and coal

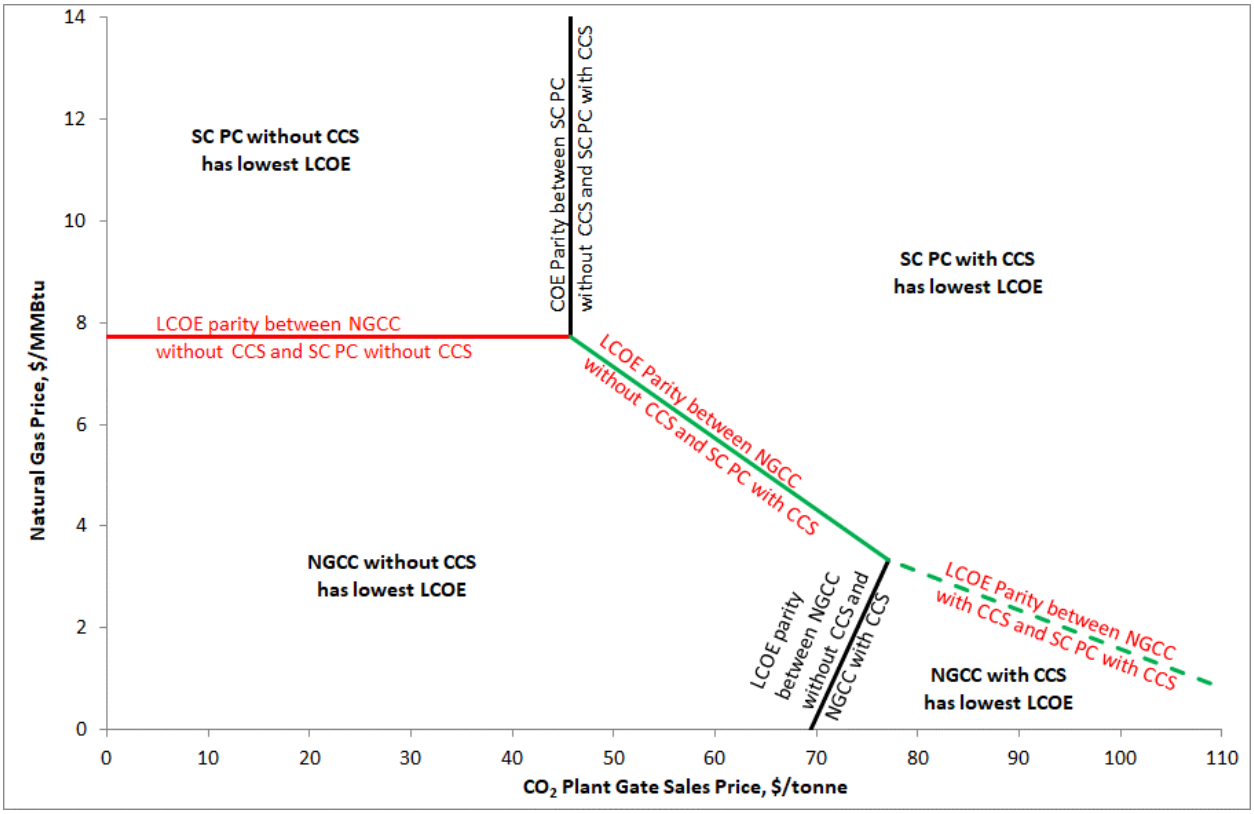

The plot demonstrates the following points:

- Non-capture plants are the low-cost option below a CO_2 price of $46/tonne ($41/ton).
- NGCC is preferred when natural gas prices are below $7.5/MMBtu with a CO_2 sale price below $46/tonne (and a CF of 85 percent). The natural gas price that provides parity between the various NGCC and PC cases drops off at higher CO_2 revenues reaching $2/MMBtu at approximately $95/tonne ($86/ton).

6.3 SENSITIVITIES

Exhibit 6-14 shows the LCOE sensitivity to fuel costs for NGCC and SC PC cases with and without CCS, as well as the lowest LCOE IGCC cases with (GEP Quench) and without (E-Gas™) CCS. The bands for the coal cases represent a variance in coal price from $1.58–2.64/GJ ($1.67–2.78/MMBtu) (±25 percent of the base study value of $2.11/GJ [$2.23/MMBtu]). This sensitivity highlights regions of competitiveness for NGCC with SC PC and the lowest cost IGCC options, with and without CCS, as a function of the delivered natural gas price. As an example, at a coal cost of $2.23/MMBtu, the LCOE of the non-capture SC PC case equals non-capture NGCC at a natural gas price of approximately $8/MMBtu. For the same comparison with capture cases, SC

PC is competitive with NGCC at a natural gas price of approximately $10/MMBtu. For the lowest cost IGCC case with capture, a natural gas price in excess of $15/MMBtu is required for competitiveness with NGCC with capture.

Exhibit 6-14. LCOE sensitivity to fuel costs

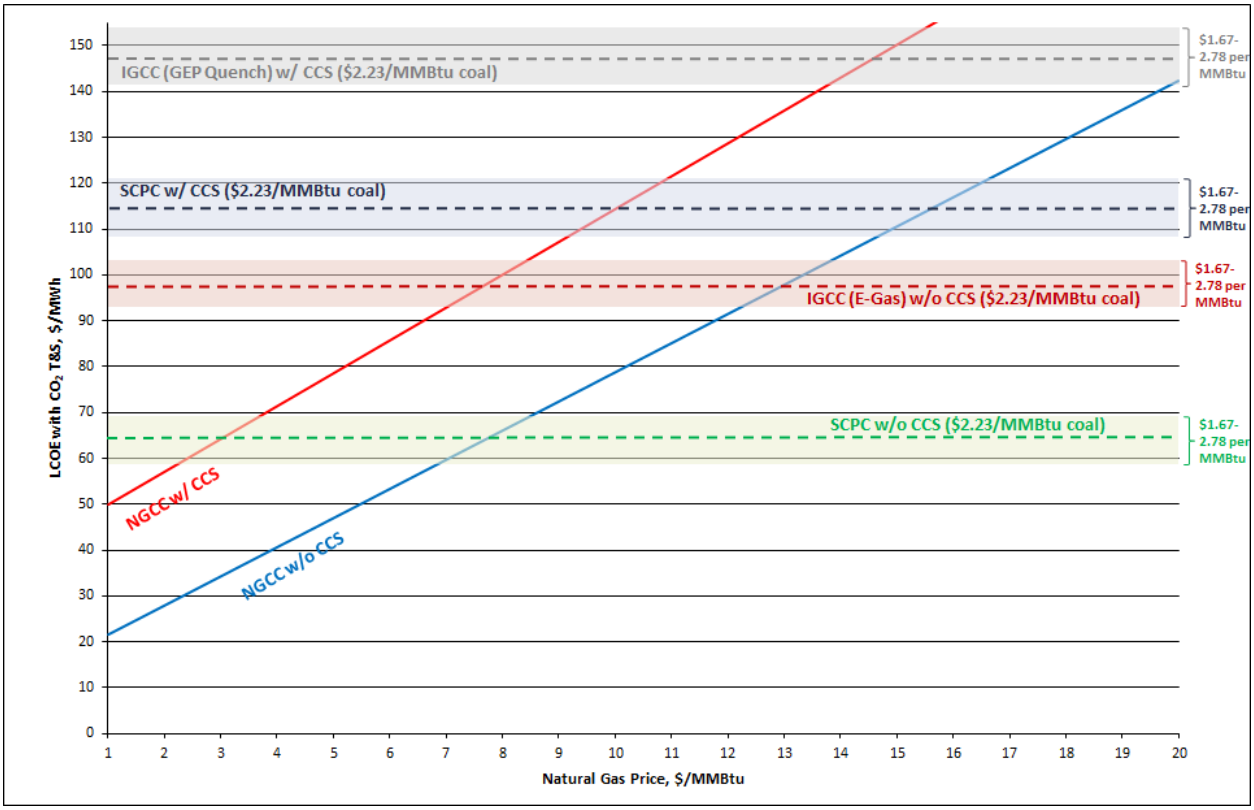

In Exhibit 6-15, the sensitivity of LCOE to CF is shown for all technologies. The curves are relatively tightly grouped by technology, and whether CO_2 capture is included or not. The CF is plotted from 30 to 95 percent. The baseline CF is 85 percent for both PC and NGCC technologies, and 80 percent for IGCC. The curves plotted in Exhibit 6-15 assume that the CF could be extended to 95 percent with no additional capital equipment and that lower capacity factors don't result in capital cost savings.

Technologies with high capital cost (IGCC with CO_2 capture, followed by PC with CO_2 capture, and IGCC without CO_2 capture) show a greater increase in LCOE with decreased CF. Conversely, NGCC with no CO_2 capture is relatively flat because the LCOE is dominated by fuel charges, which decrease as the CF decreases. Conclusions that can be drawn from Exhibit 6-15 include:

- At any CF shown, NGCC has the lowest LCOE out of the non-capture cases.
- The LCOE of NGCC with CO_2 capture is the lowest of the capture technologies, and the advantage increases as the CF decreases. The relatively low capital cost component of NGCC accounts for the increased cost differential with decreased CF. NGCC with CO_2 capture approaches competitiveness with both PC cases without CO_2 capture as the CF approaches 30 percent.

Exhibit 6-15. LCOE sensitivity to capacity factor

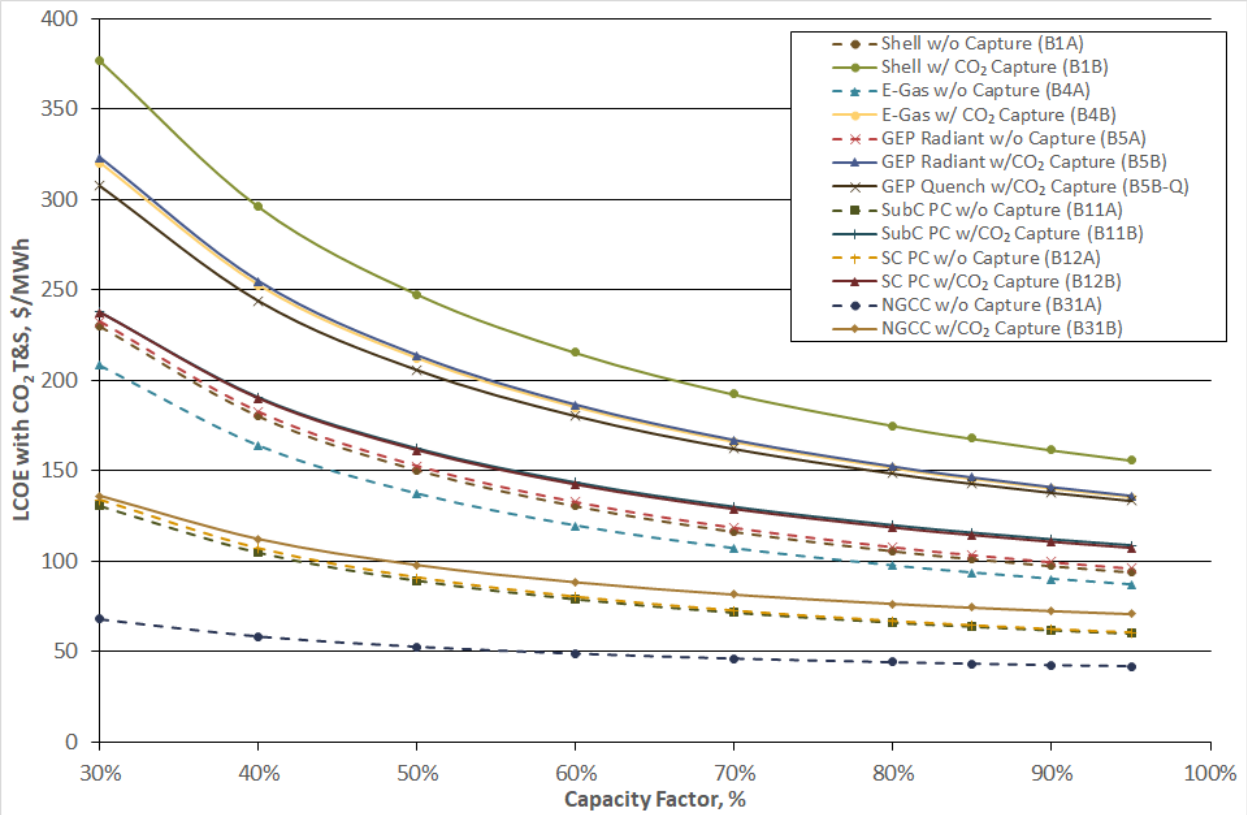

The next series of sensitivities illustrates the impact of various financial parameters on LCOE, BSP and BEP for SC PC and NGCC cases with and without CCS. In Exhibit 6-16 and Exhibit 6-17, the sensitivity of LCOE and BSP/BEP to debt-to-equity (D:E) ratio is plotted. Since the baseline required return on equity (10 percent) is greater than the baseline cost of debt (5 percent), the LCOE of the more capital-intensive technologies increases more rapidly as the D:E ratio decreases. The impact of D:E ratio on BSP and BEP for PC and NGCC cases is similar (on a relative basis) because the change in D:E ratio impacts the capture plant and non-capture reference plant in a consistent manner.

The sensitivity of LCOE and BSP/BEP to effective tax rate is plotted in Exhibit 6-18 and Exhibit 6-19. The tax rate impact is relatively small for all technologies, but similar to D:E ratio, the more capital-intensive technologies are impacted to a greater extent. The most capital-intensive technology plotted, SC PC with CCS, has an LCOE increase of 5.9 percent as the effective tax rate increases from 0 to 40 percent. The least capital-intensive technology plotted, NGCC without CCS, experiences only a 2.8 pecent increase in LCOE over the same effective tax rate range. The relative impact of effective tax rate on BSP and BEP is nearly constant for all four technologies plotted, ranging from 6.0 to 7.4 percent over the entire 0 to 40 percent tax rate range considered.

Exhibit 6-16. LCOE sensitivity to debt-to-equity ratio

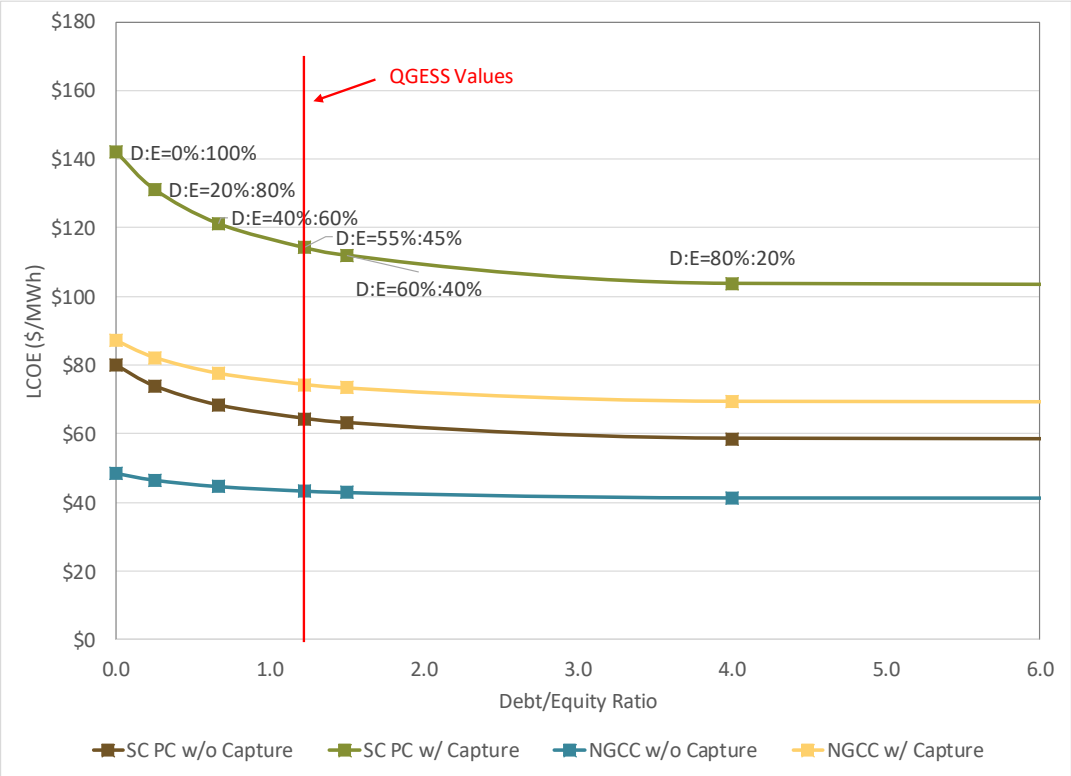

Exhibit 6-17. BSP or BEP sensitivity to debt-to-equity ratio

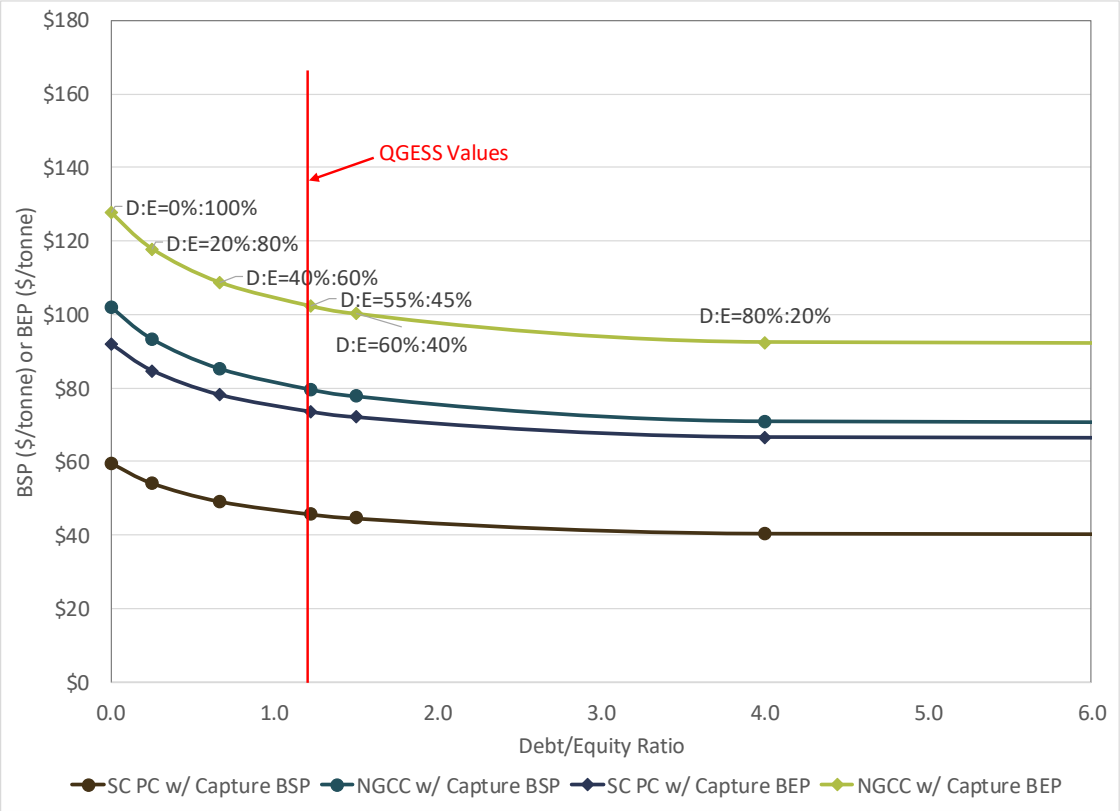

Exhibit 6-18. LCOE sensitivity to effective tax rate

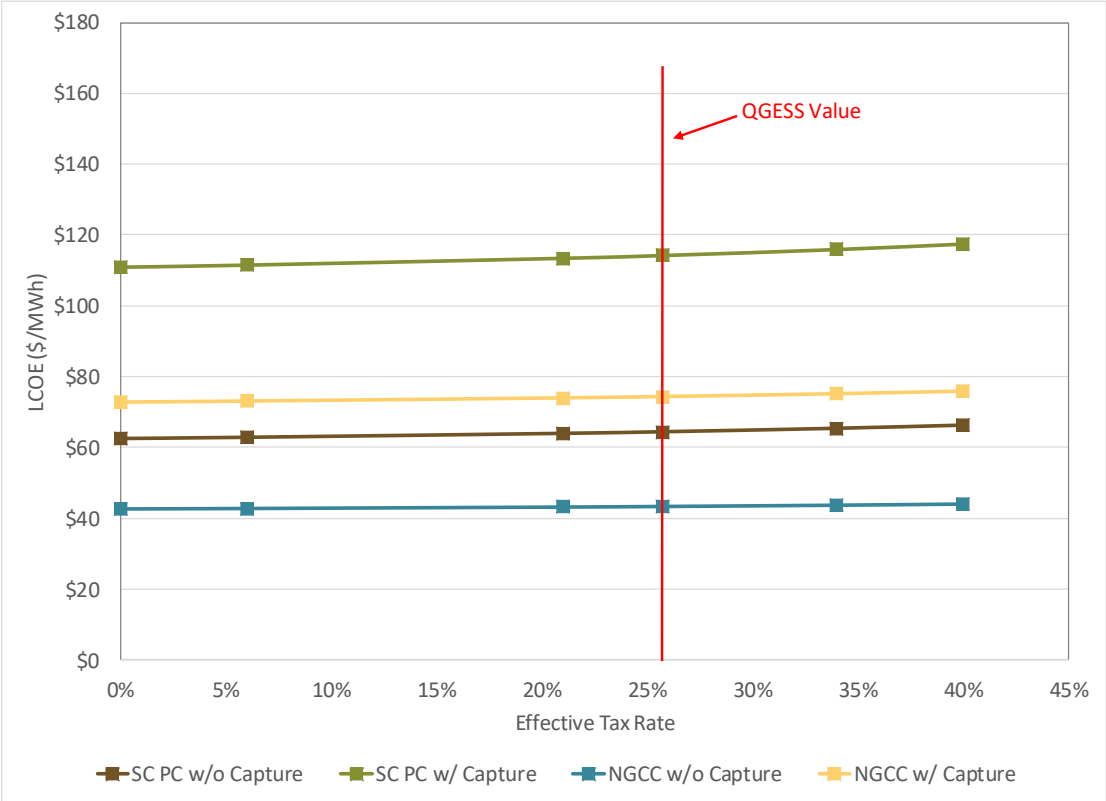

Exhibit 6-19. BSP or BEP sensitivity to effective tax rate

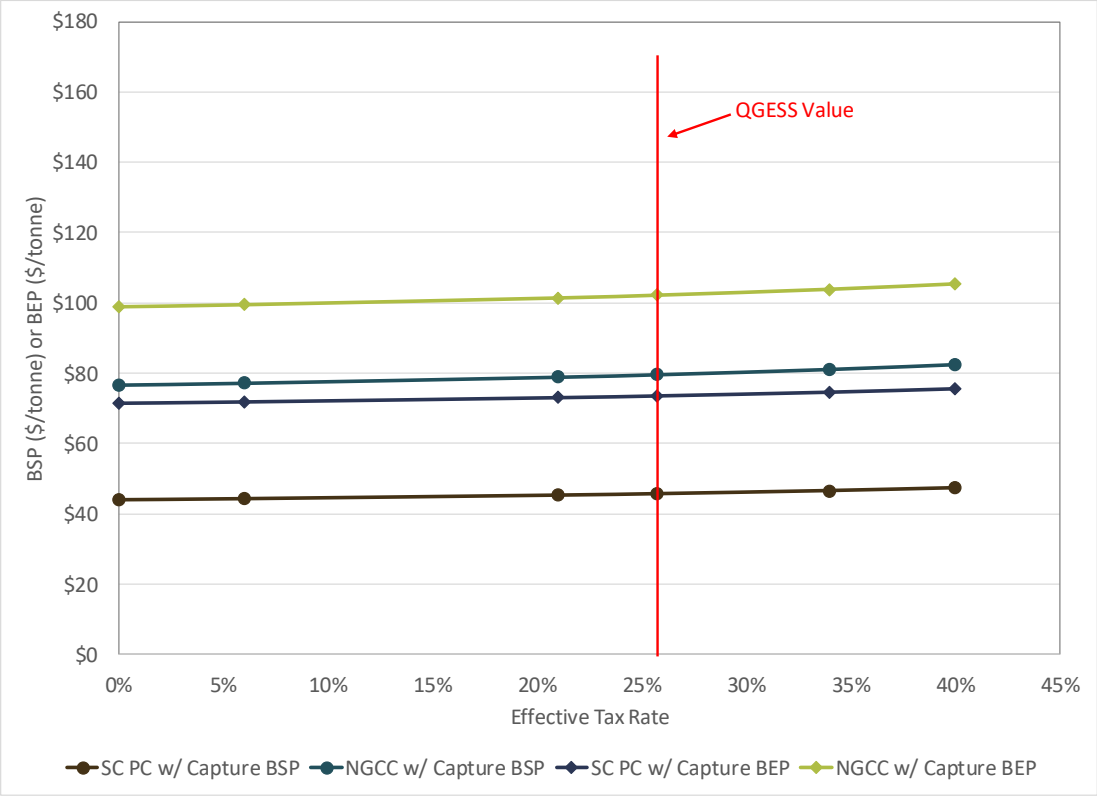

The sensitivity of LCOE and BSP/BEP to interest rate on debt is plotted in Exhibit 6-20 and Exhibit 6-21, and the sensitivity to return on equity is plotted in Exhibit 6-22 and Exhibit 6-23. The trends for both sensitivities are consistent with the D:E ratio sensitivity. LCOE increases more rapidly for more capital-intensive projects than less-capital intensive projects as the debt interest rate increases and the required return on equity increases. The BSP and BEP for the two technologies are impacted nearly the same on a relative basis, as was the case with the D:E ratio sensitivity.

The final sensitivity examines the impact of multiple simultaneous financial parameter variations. At one extreme, it is assumed that the project is financed with all debt at a 0 percent interest rate and with a 0 percent tax rate. At the other extreme, 100 percent equity financing with a 20 percent required return on equity and a 40 percent effective tax rate is assumed. Four additional scenarios between these two extremes are also considered, including the baseline scenario of a D:E ratio of 55:45, an interest rate of 5 percent, a required return on equity of 10 percent, and an effective tax rate of 25.7 percent. This sensitivity illustrates the significant impact that financial parameter assumptions can have on LCOE. Using SC PC with CCS as an example, the LCOE ranges from $78 - $279/MWh at the two extremes and is $114/MWh at the baseline conditions. The impact on the less capital-intensive NGCC without CCS case is less extreme, but still impactful. The range of LCOE at the two extreme scenarios is $36 - $78/MWh with the baseline condition resulting in an LCOE of $43/MWh.

Exhibit 6-20. LCOE sensitivity to interest rate on debt

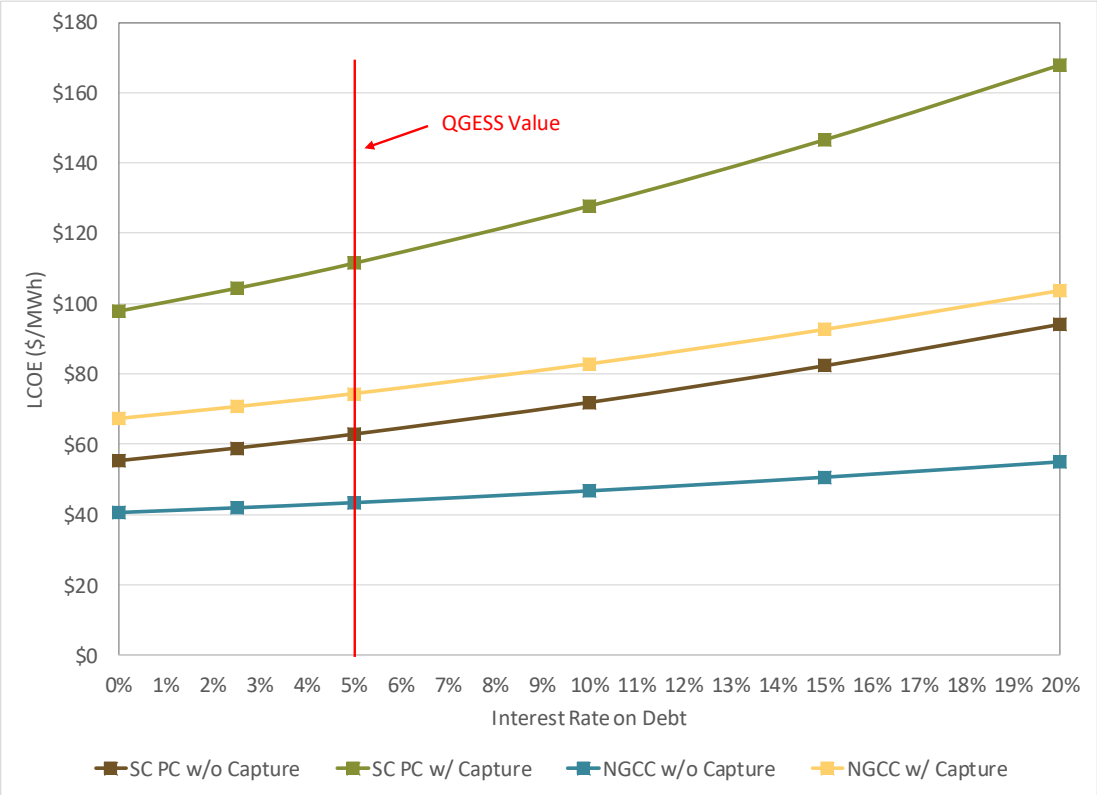

Exhibit 6-21. BSP or BEP sensitivity to interest rate on debt

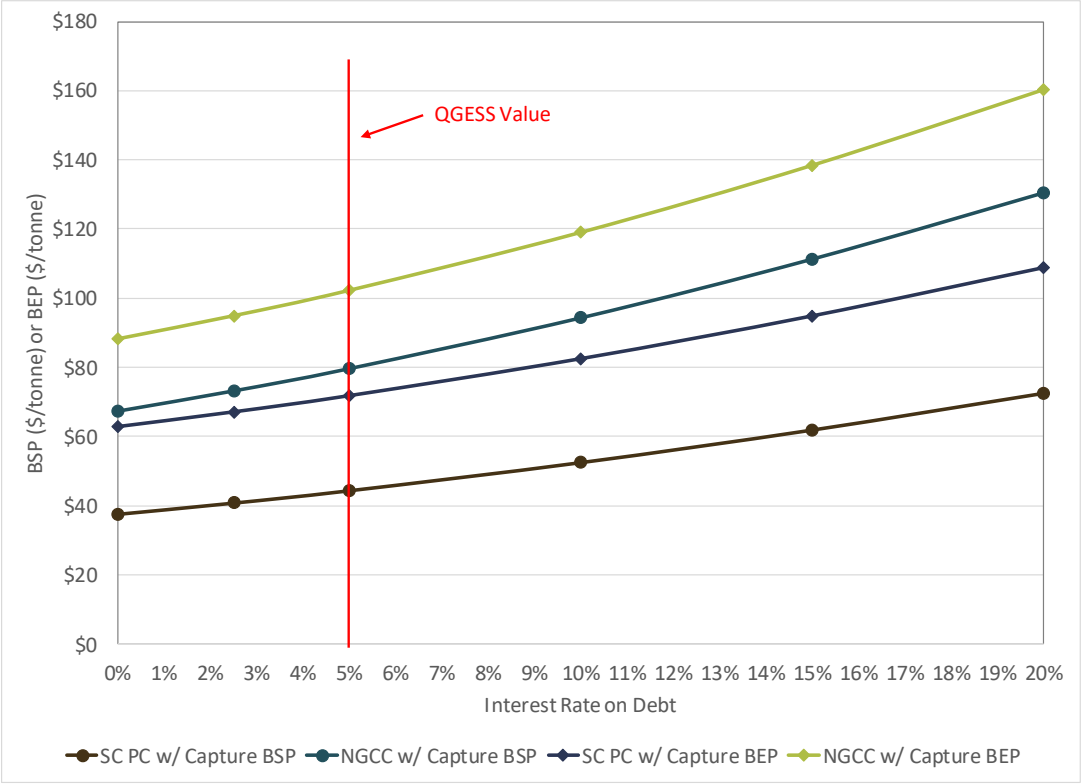

Exhibit 6-22. LCOE sensitivity to return on equity

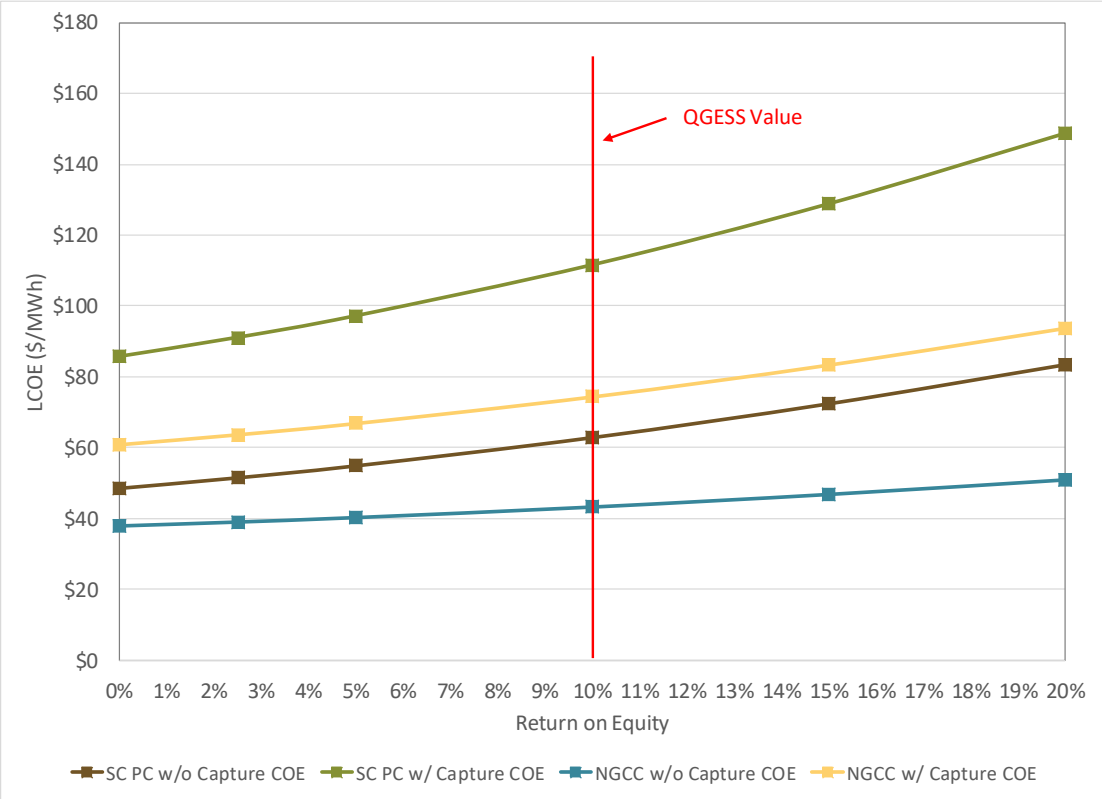

Exhibit 6-23. BSP or BEP sensitivity to return on equity

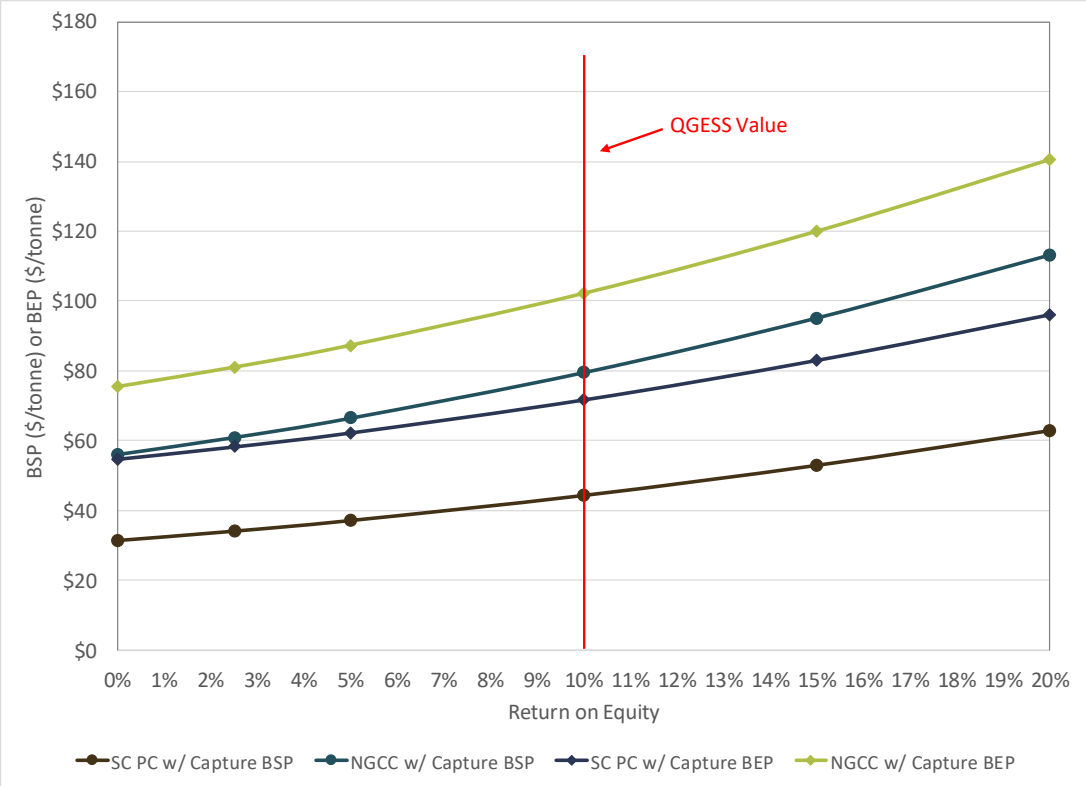

Exhibit 6-24. LCOE sensitivity to combined financial parameters

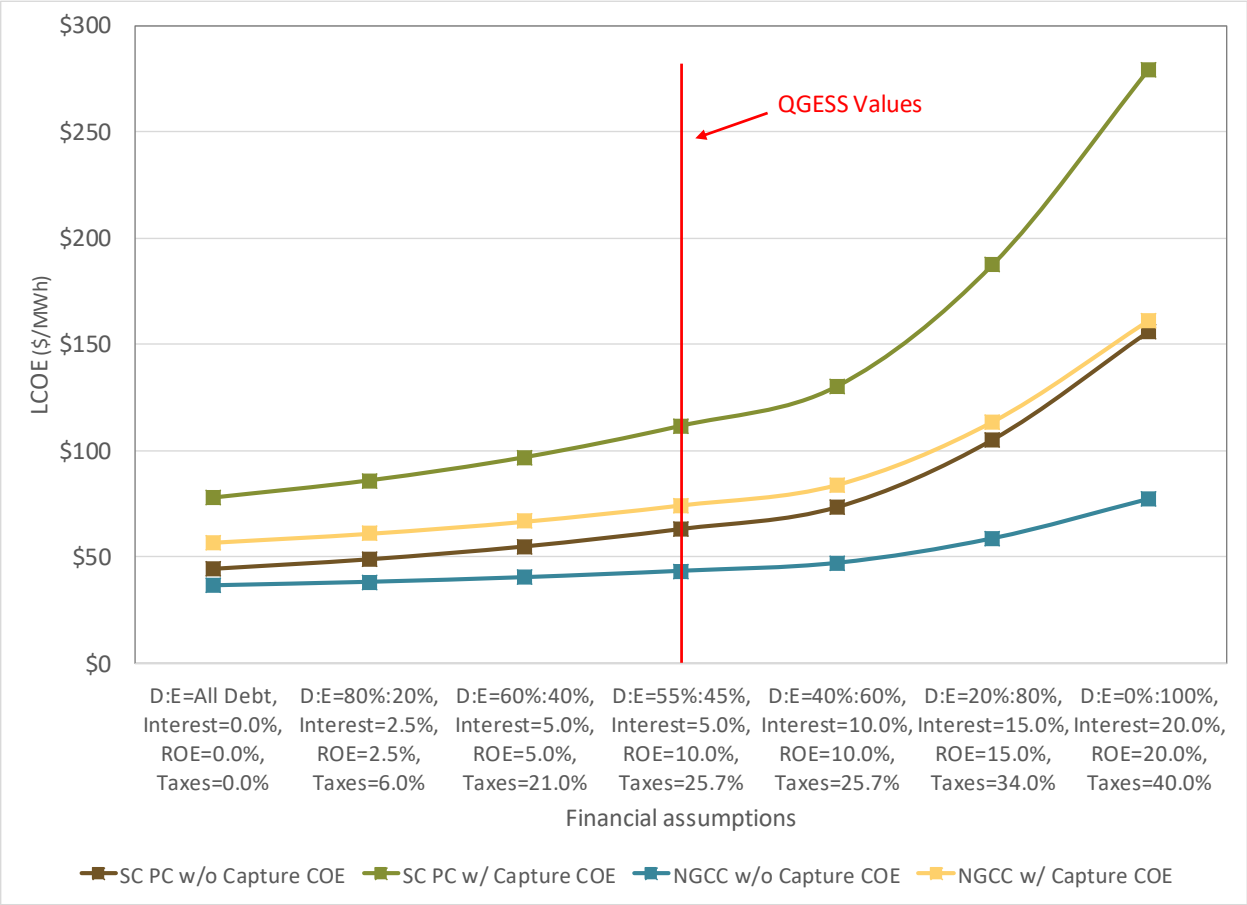

7 REVISION CONTROL

The initial issue of this report was published in May 2007, and updated revisions were published in November 2010 and July 2015. Since the reissue date, updates have been made to various report sections. These modifications were made for clarification and aesthetic purposes as well as to bring all costs to the current year dollar basis.

Exhibit 7-1 contains information that was added, changed, or deleted in successive revisions.

Exhibit 7-1. Record of revisions

Revision Number	Revision Date	Description of Change	Comments
1	8/23/07	Added disclaimer to Executive Summary and Introduction	Disclaimer involves clarification on extent of participation of technology vendors
		Removed reference to cases 7 and 8 in Exhibit ES-1 and Exhibit 1-1 since they no longer exist	SNG cases moved to Volume 2 of this report as explained in the Executive Summary and Section 1
		Added Section 2.8	Explains differences in IGCC TPC estimates in this report versus costs reported by other sources
		Added Exhibit ES-14	Mercury emissions are now shown in a separate exhibit from SO_2, NOx, and PM because of the different y-axis scale
		Corrected PC and NGCC CO_2 capture case water balances	The capture process cooling water requirement for the PC and NGCC CO_2 capture cases was overstated and has been revised
		Replaced exhibits ES-4, 3-121, 4-52, and 5-30	The old water usage figures were in gpm (absolute) and in the new figures the water numbers are normalized by net plant output
		Updated Selexol process description	Text was added to Section 3.1.5 to describe how H_2 slip was handled in the models
		Revised PC and NGCC CO_2 capture case energy balances (exhibits 4-21, 4-42 and 5-21)	The earlier version of the energy balances improperly accounted for the capture process heat losses. The heat removed from the capture process is rejected to the cooling tower
		Corrected Exhibit 4-13 and Exhibit 4-27	Sensible heat for combustion air in the two NGCC cases was for only one of the two combustion turbines – corrected to account for both turbines
2	10/27/10	Updated circulating water flow rate values in Section 3.1.8	Revision 1 changes to capture system cooling water flow rate were not made in the text in Section 3.1.8 (Circulating Water System)
		Added Supplemental Chapter 6 "Effect of Higher Natural Gas Prices and Dispatch-Based Capacity Factors"	N/A
		Added Supplemental Chapter 7 "Dry and Parallel Cooling"	N/A
		Added Supplemental Chapter 8 "GEP IGCC in Quench-Only	N/A

Revision Number	Revision Date	Description of Change	Comments
		Configuration with CO_2 Capture"	
		Added Supplemental Chapter 9 "Sensitivity to MEA System Performance and Cost Bituminous Baseline Case B12BA"	N/A
		Updated Aspen models	Major Aspen model updates included: • Converting FORTRAN code-based steam cycles to Aspen blocks • Using the Peng-Robinson property method in the Aspen gasifier section • Modifying the AGR used in the IGCC cases to more closely represent commercially available technology • Increasing the capture efficiency of the E-Gas™ plant with capture to achieve 90 percent • Correcting a steam condition error in the SC PC cases with capture
		Updated case performance results	Major updates included: • Revising the water balances to include withdrawal and consumption • CAD-based HMB diagrams were replaced with Visio versions
		Completed updating case economic results	Major updates included: • Adding owner's costs to the total plant costs to generate total overnight cost • Updating fuel costs • Revising the T&S methodology to include the July 2007 Handy-Whitman Index, pore space acquisition costs, and liability costs • Re-costing of cases based on the updated performance results • Switching to COE as the primary cost metric (as opposed to LCOE)
		Updated report tables, figures, and text to reflect the revision 2 changes	N/A
2a	9/19/2013	Section 2.7.1 was revised to clarify the text that explains the level of technology maturity reflected in the plant level cost estimates	N/A
2b	7/13/2015	Volume 1 has been split into two sub volumes	Major updates included: • IGCC cases are reported in Volume 1b with a cost-only update (issued as an update to revision 2a)

Revision Number	Revision Date	Description of Change	Comments
			• PC and NGCC cases are reported in Volume 1a with a cost and performance update (issued as revision 3) • Executive Summary significantly revised and shortened • Results analysis section added
		Separated Supplemental Chapter 6 "Effect of Higher Natural Gas Prices and Dispatch-Based Capacity Factors" into a stand-alone report	N/A
		Separated Supplemental Chapter 7 "Impact of Dry and Parallel Cooling Systems on Cost and Performance of Fossil Fuel Power Plants" into a stand-alone report	N/A
		Incorporated the Supplemental Chapter 8 "GEP IGCC in Quench-Only Configuration with CO_2 Capture" into the body of the report	The supplemental chapter was broken down and the information regarding the case describe within it is presented similar to cases B5A and B5B in Section 3.4.12
		Removed Supplemental Chapter 9 "Sensitivity to MEA System Performance and Cost Bituminous Baseline Case 12A"	N/A
		Updated the environmental targets to current limits published by EPA and presented in Section 2.3	MATS and NSPS regulate SO_2, NOx, Filterable PM, Hg, and HCl on a lb/MWh-gross basis
		Updated Section 2.5 covering Capacity Factors	Additional information has been included that supports the assumptions made regarding the CFs used for each technology type
		Removed portions of Section 2.7 concerning cost estimating methodology	Many QGESS documents have been published that detail information generic to a number of studies published by NETL. In an effort to reduce the size of this report, text provided in these QGESS documents has been removed and references have been inserted that provide the QGESS document title and revision notation
		Added Cost of CO_2 Captured methodology and results	The Cost of CO_2 Avoided methodology has been moved from the Executive Summary and combined with the Cost of CO_2 Captured methodology in Section 2.7.4
		Removed Section 2.7	N/A
		Updated Section 3.1.4 to reflect the use of a dual carbon bed	N/A
		Updated Section 3.1.5	Superfluous information has been removed and the remaining information has been re-organized,

Revision Number	Revision Date	Description of Change	Comments
			especially concerning AGR/gasifier pairings used in non-capture cases
		Improved the BFD depiction of the HRSGs	N/A
		Updated all cases to a new case naming convention	Example: Revision 2's Case 1 is now Case B5A

		Updated performance tables	Major updates include:
			• Table is split into two sections
			  ○ Performance summary
			  ○ Plant power and auxiliary load breakdown
			  ○ O_2:Coal ratio
			  ○ Cold gas efficiency
			  ○ Combustion turbine efficiency
			  ○ Steam turbine efficiency and heat rate
			  ○ LHV basis efficiency and heat rate

		Updated case performance results	Major updates included: • Added particle concentration to emissions results • Updated Energy Balance tables by adding Motor Losses and Design Allowances, Non-Condenser cooling tower loads, and ambient losses
		Completed updating case economic results	Major updates included: • Updated to 2011-year dollars • Revised the engineering and construction management costs • Added NG supply line • Updated the T&S costing methodology • Updated fuel prices
		Updated report tables, figures, and text to reflect the Revision 2b changes	N/A
3	7/6/2015	Volume 1 has been split into two sub volumes	Major updates included: • IGCC cases are reported in Volume 1b with a cost-only update (issued as an update to revision 2a) • PC and NGCC cases are reported in Volume 1a with a cost and performance update (issued as revision 3) • Executive summary significantly revised and shortened • Results analysis section added
		Separated Supplemental Chapter 6 "Effect of Higher Natural Gas Prices and Dispatch-Based Capacity	N/A

Revision Number	Revision Date	Description of Change	Comments
		Factors" into a stand-alone report	
		Separated Supplemental Chapter 7 "Impact of Dry and Parallel Cooling Systems on Cost and Performance of Fossil Fuel Power Plants" into a stand-alone report	N/A
		Removed Supplemental Chapter 9 "Sensitivity to MEA System Performance and Cost Bituminous Baseline Case 12A"	
		Updated the environmental targets to current limits published by EPA and presented in Section 2.3	MATS and NSPS regulate SO_2, NOx, Filterable PM, Hg, and HCl on a lb/MWh-gross basis
		Updated Section 2.5 covering Capacity Factors	Additional information has been included that supports the assumptions made regarding the CFs used for each technology type
		Removed portions of Section 2.7 concerning cost estimating methodology	Many QGESS documents have been published that detail information generic to a number of studies published by NETL. In an effort to reduce the size of this report, text provided in these QGESS documents has been removed and references have been inserted that provide the QGESS document title and revision notation
		Cost of CO_2 Captured methodology and results have been added	The Cost of CO_2 Avoided methodology has been moved from the Executive Summary and combined with the Cost of CO_2 Captured methodology in Section 2.7.4
		Section 2.8 has been updated to reflect current information	
		The combustion turbine performance characteristics have been updated	The performance provided in this report reflects a state-of-the-art 2013 F-class combustion turbine for NGCC cases
		Updated Natural Gas Composition	Methanethiol was added to the composition
		Improved the BFD depiction of the HRSGs in NGCC Case	
		All cases have been updated to a new case naming convention	Example: Revision 2's Case 9 is now Case B11A
		Performance tables have been updated	Major updates include: • Table is split into two sections ○ Performance summary

Revision Number	Revision Date	Description of Change	Comments
			○ Plant power and auxiliary load breakdown • PC ○ Steam generator efficiency ○ Excess air ○ Steam turbine cycle efficiency and heat rate ○ LHV basis efficiency and heat rate • NGCC ○ Combustion turbine efficiency ○ Steam turbine efficiency and heat rate ○ LHV basis efficiency and heat rate
		Updated case performance results	Major updates included: • Added particle concentration to emissions results • Updated Energy Balance tables by adding Motor Losses and Design Allowances, Non-Condenser cooling tower loads, and ambient losses
		Updated Aspen models	Major Aspen model updates included: • Updated steam turbine efficiency • Incorporated exhaust losses into LP turbine efficiency • Changed Capture system in NGCC and PC cases to Cansolv system • Updated many pressure drops to percent of inlet • Corrected temperature approaches • Corrected pressure drops across various systems • Converted to Aspen 8.2 • Converted to Hierarchy models • Converted steam property method to SteamNBS • Updated CO_2 compression system to front loaded 8 stage design in NGCC and PC cases • ACI and DSI systems were added to PC cases • Boiler air preheater exit temperature was reduced to 300°F • Excess O_2 is controlled at the flue gas exiting the boiler at 2.7 percent dry • Combustion turbine for NGCC cases was updated • Added steam extraction for CO_2 dryer
		Completed updating case economic results	Major updates included: • Updating to 2011-year dollars • Updating the T&S costing methodology • Updating the capital charge factors • Updating fuel prices

Revision Number	Revision Date	Description of Change	Comments
			• Re-costing of cases based on the updated performance results • Updating cost estimates based on recently obtained vendor quotes
		Updated report tables, figures and text to reflect the revision 3 changes	
4	9/24/2019	Volumes 1a (PC and NGCC) and 1b (IGCC) have been recombined into one report (Volume 1 – Rev4)	• IGCC case updates began with the internal Rev4-Performance Only report • PC and NGCC began with the Rev3 report
		Updated syngas scrubber performance and added vacuum flash, brine concentration, and a crystallizer	Added Section 3.1.12 to cover process water sources, define the ZLD methodology, and provide the technology descriptions of the systems used to achieve ZLD
		Added secondary SWS	Secondary SWS is used to remove ammonia from the ZLD condensate prior to being used as steam for the gasifiers
		Removed SWS from Cases B5B and B5B-Q	SWS only treats excess process water from the process water drum. These cases do not have any excess
		Reduced the chloride content of the coal	Added discussion of chloride content of coal to Section 2.2
		Updated the HHV/LHV calculation method for natural gas	Aspen Plus QVALGRS/QVALNET stream property data used to calculate natural gas heating values
		Updated ASU technology description in Section 3.1.2	New information was acquired for ASU performance
		Updated WGS technology description in Section 3.1.3	New information was acquired for WGS performance
		Updated Selexol technology description in Section 3.1.5.4	New information was acquired for Selexol performance
		Updated COS hydrolysis technology description in Section 3.1.5.1	New information was acquired for COS hydrolysis performance
		Updated CO_2 compression and drying system technology description	New information was acquired for compression and drying performance. Sections updated are: • Section 3.1.6 • Section 4.1.9
		Updated gasifier specific technology descriptions to reflect changes made to the common process areas (Section 0)	Sections updated are: • Section 3.2.4 • Section 3.2.8 • Section 3.3.4

Revision Number	Revision Date	Description of Change	Comments
			• Section 3.3.8 • Section 3.4.4 • Section 3.4.8 • Section 3.4.12
		Added chloride control to the plant study configuration matrices	N/A
		Updated performance of the steam cycle	New information was acquired for steam turbine performance for IGCC cases
		Updated NGCC combustion turbine and steam turbine description	New information was acquired for performance. Sections updated are: • Section 5.1.2 • Section 5.1.3 • Section 5.1.4 • Section 5.1.6 • Section 5.1.7 • Section 5.1.10
		Updated Shell Cansolv description for PC and NGCC	New information was acquired for performance. Sections updated are: • Section 4.1.8 • Section 5.1.5
		Updated the PC target net plant output to 650 MW-net	New PC net output provides comparable basis for PC and NGCC capture cases (NGCC w/ capture is 646 MW-net)
		Added spray dryer evaporator for PC cases	Added Section 4.1.10 to cover process water sources and provide the technology descriptions of the spray dryer evaporator
		Updated PC mercury control system descriptions	New information was acquired for performance. Sections updated are: • Section 4.1.6
		Additional Aspen model updates	Major Aspen model updates included: • CO_2 compressor product water target updated to 500 ppmv H_2O • Increased CO_2 compressor intercooling temperatures for final two stages of intercooling • All NOx assumed to be NO (previously considered split of NO and NO_2) • Carbon extent of reaction in PC cases adjusted from 1.0 to 0.994 for bituminous PC cases • DSI/ACI modeled in Aspen Plus • PC boiler block split to allow for ELG spray dryer evaporator flue gas extraction • FGD HCl removal efficiency updated to 99 percent

Revision Number	Revision Date	Description of Change	Comments
			• FGD oxidation air stoichiometric ratio increased to 4.0 • Set excess O_2 prior to the air preheater to 2.6 volume percent-dry for all PC cases • Added IGCC mercury bed preheater
		Energy balance updated to report a Cooling Tower line item	Rather than split out Acid Gas Removal, Condenser, and Non-Condenser cooling loads, all three are summed in the Cooling Tower line item. The AGR cooling duty is reported separately in the Performance Summary table under the Condenser cooling duty
		PC with CO_2 capture cases water balance updated to recycle capture system water recovered as FGD make-up; balance of water recovered sent to discharge	N/A
		Updated fixed auxiliary loads	Steam turbine, Gas turbine, and Miscellaneous Balance of Plant fixed auxiliary loads were updated
		Updated performance data throughout the report to reflect new performance results obtained from changes previously stated in this revision	
		Completed updating case economic results	Major updates included: • Reporting results in 2018-year dollars • Updating the T&S costing methodology • Reverting to LCOE result, but with updated methodology • Updating fuel prices • Re-costing of cases based on the updated performance results • Revised the engineering and construction management costs, as well as some contingencies • Updating cost estimates based on recently obtained vendor quotes

8 REFERENCES

[1] National Energy Technology Laboratory, "Quality Guidelines for Energy System Studies: Detailed Coal Specifications," U.S. Department of Energy, Pittsburgh, PA, 2019.

[2] National Energy Technology Laboratory, "Quality Guidelines for Energy System Studies: Specification for Selected Feedstocks," U.S. Department of Energy, Pittsburgh, PA, 2019.

[3] National Energy Technology Laboratory, "Quality Guidelines for Energy System Studies: Process Modeling Design Parameters," U.S. Department of Energy, Pittsburgh, PA, 2019.

[4] National Energy Technology Laboratory, "Quality Guidelines for Energy System Studies: Cost Estimation Methodology for NETL Assessments of Power Plant Performance," U.S. Department of Energy, Pittsburgh, PA, 2019.

[5] National Energy Technology Laboratory, "Quality Guidelines for Energy System Studies: Fuel Prices for Selected Feedstocks in NETL Studies," U.S. Department of Energy, Pittsburgh, PA, 2019.

[6] National Energy Technology Laboratory, "Cost and Performance Baseline for Fos Energy Plants, Volume 5 - Coal Electricity Generating Units for Flexible Operation, U.S. Department of Energy, Pittsburgh, PA, 2019 (expected).

[7] National Energy Technology Laboratory, "Cost and Performance Baseline for Fos Energy Plants, Volume 1a: Bituminous Coal (PC) and Natural Gas to Electricity, Revision 3," DOE/NETL-2015/1723, Pittsburgh, July 6, 2015.

[8] National Energy Technology Laboratory, "Cost and Performance Baseline for Fos Energy Plants, Volume 1b: Bituminous Coal (IGCC) to Electricity, Revision 2b," DOE/NETL-2015/1727, Pittsburgh, July 31, 2015.

[9] AACE International, Conducting Technical and Economic Evaluations – As Appli for the Process and Utility Industries; TCM Framework: 3.2 – Asset Planning, 3.3 Investment Decision Making, AACE International, 2003.

[10] AACE International, Cost Estimate Classification System – As Applied in Engineeri Procurement, and Construction for the Process Industries; TCM Framework 7.3 – Cost Estimating and Budgeting, AACE International, 2005.

[11] Mining Media, *2004 Keystone Coal Industry Manual,* Prairieville, LA: Mining Medic publications, 2004.

[12] Prairie Research Institute, "Herrin Coal Chlorine," University of Illinois at Urbana-Champaign, [Online]. Available: https://www.isgs.illinois.edu/content/herrin-coa chlorine. [Accessed 24 October 2015].

[13] National Energy Technology Laboratory, "Major Environmental Aspects of Gasification-Based Power Generation Technologies," U.S. Department of Energy, Pittsburgh, PA, 2002.

[14] Gas Research Institute, Variability of Natural Gas Composition in Select Major Metropolitan Areas of the United States, Springfield: U.S. Department of Commerce, 1992.

[15] Environmental Protection Agency, "40 CFR Part 60 - Standards of Performance fo New Stationary Sources - Subpart Da," 16 February 2012. [Online]. Available: https://www.ecfr.gov/cgi-bin/text-idx?SID=d52d331641a470ed3e372a78f38cca58&mc=true&node=pt40.7.60&rgn=5#se40.7.60_144da. [Accessed 21 May 2018].

[16] Environmental Protection Agency, "National Emission Standards for HAPs from Co and Oil-Fired EGUs and Standards of Performance for Fossil-Fuel-Fired Electric Util Industrial-Commercial-Institutional, and Small Industrial-Commercial-Institutional Steam Generating Units; Correction," 6 April 2016. [Online]. Available: https://www.gpo.gov/fdsys/pkg/FR-2016-04-06/pdf/2016-06563.pdf. [Accessed 2 May 2018].

[17] Environmental Protection Agency, "Map of Counties Designated "Nonattainmen for Clean Air Act's National Ambient Air Quality Standards (NAAQS)," 30 April 201 [Online]. Available: https://www3.epa.gov/airquality/greenbook/map/mapnpoll.pdf. [Accessed 10 June 2019].

[18] Environmental Protection Agency, "Electronic Code of Federal Regulations," 201 [Online]. Available: http://www.ecfr.gov. [Accessed 6 February 2013].

[19] Environmental Protection Agency, "40 CFR Part 423 Effluent Limitations Guideline and Standards for the Steam Electric Power," 2015.

[20] Environmental Protection Agency, "National Pollutant Discharge Elimination Syste (NPDES)," [Online]. Available: https://www.epa.gov/npdes. [Accessed 13 July 2017].

[21] G. Thomas, *Delivering the IGCC Solution,* GE Energy, January 2006.

[22] H. Morehead and F. Hannemann, *Siemens Technology Improvements Enhance IGCC Plant Economics,* San Francisco, CA: Gasification Technologies, October 2005.

[23] D. Denton, *Telephone communication,* Eastman Chemical Co.

[24] Environmental Protection Agency, "40 CFR Parts 60 and 63," Environmental Protection Agency (EPA), 2012. [Online]. Available: http://www.gpo.gov/fdsys/pkg/FR-2012-02-16/pdf/2012-806.pdf. [Accessed 6 February 2012].

[25] GE Power, "7F Power Plants," November 2017. [Online]. Available: https://www.ge.com/content/dam/gepower-

pgdp/global/en_US/documents/product/gas%20turbines/Fact%20Sheet/2018-prod-specs/7f-power-plants.pdf. [Accessed 10 May 2018].

[26] L. B. Davis and S. Black, "Dry Low NOx Combustions Systems for GE Heavy-Duty G Turbines," GE Power Systems, October 2000.

[27] Environmental Protection Agency, "40 CFR Part 60 - Carbon Pollution Emissions Guidelines for Existing Stationary Sources: Electric Utility Generating Units; Final Ru Vol. 80 No. 205," 23 October 2015. [Online]. Available: https://www.gpo.gov/fdsys/pkg/FR-2015-10-23/pdf/2015-22842.pdf. [Accessed 9 October 2018].

[28] Office of the Federal Register, "Proposed Rules Vol. 83 No. 244," 20 December 20 [Online]. Available: https://www.govinfo.gov/content/pkg/FR-2018-12-20/pdf/20 27052.pdf. [Accessed 6 June 2019].

[29] North American Electric Reliability Corporation (NERC), "Generating Availability Report," [Online]. Available: http;//www.nerc.com/pa/RAPA/gads/Pages/Reports.aspx. [Accessed July 2018]

[30] R. Ray, "Power Engineering - Power Plant Performance in 2017," June 2018. [Onlin Available: https://digital.power-eng.com/power-eng/201806/MobilePagedArticle.action?articleId=1403573&sub_id=WqxJhzhDpK Q#articleId1403573. [Accessed 6 July 2018].

[31] J. Phillips, *IGCC 101,* Tampa, FL, 2011.

[32] C. Higman, S. DellaVilla and B. Steele, *The Reliability of Integrated Gasification Combined Cycle (IGCC) Power Generation Units,* May 2006.

[33] P. Amick, *ConocoPhillips Presentation at Gasification Technology Council Workshop for Environmental and Economic Regulators,* June 2010.

[34] Electric Power Research Institute, *Evaluation of Alternative IGCC Plant Designs fo High Availability and Near Zero Emissions: RAM Analysis and Impact of SCR,* Palo Alto, CA, December 2005.

[35] Electric Power Research Institute, *Integrated Gasification Combined Cycle (IGC Design Considerations for High Availability, Volume 1: Lessons from Existing Operations,* Palo Alto, CA, 2005.

[36] Electric Power Research Institute, *Integrated Gasification Combined Cycle (IGC Design Considerations for High Availability, Volume 2: RAM Modeling of Standarc Designs,* Palo Alto, CA, 2007.

[37] Electric Power Research Institute, *Gasification Technology Status,* December 201

[38] R. R. Richwine, *Performance Improvement in Coal-Fired Power Stations – the Southern Company Experience,* 2004: World Energy document.

[39] The Marley Cooling Tower Company, Cooling Tower Fundamentals, vol. 2nd Edition, J. C. Hensley, Ed., Mission, Kansas, 1985.

[40] Chemical Engineering, *Chemical Engineering Plant Cost Index,* Access Intelligence, LLC, Ed., 2013.

[41] Federal Reserve Bank of St. Louis, "Gross Domestic Product: Chain-type Price Inde (GDPCTPI)," 2013. [Online]. Available: http://research.stlouisfed.org/fred2/series/GDPCTPI. [Accessed 20 November 20

[42] National Energy Technology Laboratory, "Quality Guidelines for Energy System Studies: Carbon Dioxide Transport and Storage Costs in NETL Studies," U.S. Department of Energy, Pittsburgh, PA, 2019.

[43] McDermott International, Inc., 10 May 2018. [Online]. Available: http://www.mcdermott-investors.com/news/press-release-details/2018/McDermott-Completes-Combination-with-CBI/default.aspx. [Accessed 19 February 2019].

[44] Air Products, "Air Products Completes Acquisition of Shell's Coal Gasification Technology/Patents, and Forms Strategic Alliance with Shell for Liquids (Residue) Gasification for Refineries," 7 May 2018. [Online]. Available: http://www.airproducts.com/Company/news-center/2018/05/0507-air-products completes-acquisition-of-shell-coal-gasification-technology-and-patents.aspx. [Accessed 19 February 2019].

[45] Air Products, "Air Products Syngas Solutions," 2018. [Online]. Available: http://www.airproducts.com/~/media/Files/PDF/microsites/syngassolutions/EN-Coal-Gasification-DS.pdf. [Accessed 19 February 2019].

[46] Air Products, "Air Products to Acquire GE's Gasification Business and Technology," November 2018. [Online]. Available: http://www.airproducts.com/Company/ne center/2018/11/1105-air-products-to-acquire-ge-gasification-business-and-technology.aspx. [Accessed 19 February 2019].

[47] Universal Industrial Gases, "Overview of Cryogenic Air Separation," n.d. [Online]. Available: http://www.uigi.com/cryodist.html. [Accessed 29 August 2013].

[48] S. Jenkins, *Real-World Experience with IGCC – Lessons Learned in Design, Permitting, Operations and Maintenance,* URS Corporation, 2005.

[49] R. Drnevich, *Personal communication,* Praxair, Inc., November 2002.

[50] Katalco, "Sour Shift Designs for NETL IGCC CCS Study," Johnson Matthey Catalyst 2009.

[51] Calgon Carbon Corporation, "Mercury Removal from Flue Gas Streams," 2015. [Online]. Available: http://www.calgoncarbon.com/flue-gas/. [Accessed 10 November 2015].

[52] National Energy Technology Laboratory, "The Cost of Mercury Removal in an IGC Plant," U.S. Department of Energy, Pittsburgh, PA, 2002.

[53] Calgon Carbon Corporation, "HGR-P for Mercury Removal: Pelleted Activated Carbon," 2015. [Online]. Available: https://www.calgoncarbon.com/app/uploads/HGR_P.pdf. [Accessed May 2018

[54] I. Barton, Interviewee, *Employed at Johnson Matthey.* [Interview]. April 2013.

[55] Electric Power Research Institute, "Process Screening Study of Alternative Gas Treating and Sulfur Removal Systems for IGCC Power Plant Applications," December 1987.

[56] CB&I, "E-Gas™ technology," 2013. [Online]. Available: http://www.cbi.com/technologies/e-gas-technology-in-action. [Accessed 1 December 2015].

[57] National Energy Technology Laboratory, "Process Screening Analysis of Alternativ Gas Treating and Sulfur Removal for Gasification, Revised Final Report," U.S. Department of Energy, Pittsburgh, PA, December 2002.

[58] Carbon Capture Simulation Initiative, "Centrifugal Compressor Simulation User Manual," U.S. Department of Energy, 2012.

[59] V. Bilsbak, Conditioning of CO_2 Coming from a CO_2 Capture Process for Transpo and Storage Purposes, Norwegian University of Science and Technology, 2009.

[60] NATCO Group Inc, "Glycol Dehydration Systems," 2009. [Online]. Available: http://www.natcogroup.com. [Accessed 22 June 2009].

[61] M. Beychok, "Claus Process," Wikimedia Commons, 2014. [Online]. Available: http://en.wikipedia.org/wiki/Claus_process#mediaviewer/File:Claus_Sulfur_Recovery.png. [Accessed 11 June 2014].

[62] GE Power Systems, "The 7FB: The Next Evolution of the F Gas Turbine," April 2001. [Online]. Available: https://www.ge.com/content/dam/gepower-pgdp/global/en_US/documents/technical/ger/ger-4194-7fb-next-evolution-of-f-gas-turbine.pdf. [Accessed 28 May 2018].

[63] R. D. Brdar and R. M. Jones, "GE IGCC Technology and Experience with Advance Gas Turbines," GE Power Systems, Schenectady, NY, 10/2000.

[64] GE Power Systems, "Specification for Fuel Gases for Combustion in Heavy-Duty Turbines," January 2002.

[65] GE Power Systems, "Design Considerations for Heated Gas Fuel," March 2003.

[66] R. M. Bethea, Air Pollution Control Technology, New York: Van Nostrand Reinhold Company, 1978.

[67] S. Calvert, "How to Choose a Particulate Scrubber," *Chemical Engineering,* vol. 1 pp. 54-68, August 29, 1977.

[68] B. Jack D and L. K. Legatski, Venturi Scrubbers, Atlanta: FMC Corporation.

[69] Environmental Protection Agency, "SI:412C Wet Scrubber Plan Review (1998). Lesson 4: Liquid-Phase Contacting Scrubbers," EPA, 1998. [Online]. Available: http://www.apti-learn.net/lms/content/epa/courses/si_412C/index.html?cid=12&userID=43049&bkmarks=. [Accessed 27 August 2015].

[70] Babcock & Wilcox Company, Steam, Its Generation and Use, Barberton, OH: J.B. Kitto and S. C. Stultz Eds., 2015.

[71] The International Nickel Company, Inc., "Corrosion Resistance of the Austenitic Chromium-Nickel Stainless Steels in Chemical Environments," 1963. [Online]. Available: http://www.parrinst.com/wp-content/uploads/downloads/2011/07/Parr_Stainless-Steels-Corrosion-Info.pdf. [Accessed 30 October 2014].

[72] STAL, "General Properties," [Online]. Available: http://www.stal.com.cn/pdffile/316316l317317l.pdf. [Accessed 30 October 2014]

[73] CSI Designs, "Stainless Steel Selection Guide," CSI, [Online]. Available: http://www.csidesigns.com/PDFs/SSSguide.pdf. [Accessed 30 October 2014].

[74] W. J. Gilbert, Jet Venturi Fume Scrubbing, Westfield: Croll-Reynolds Company.

[75] Wabash River Coal Gasification Repowering Project, "Topical Report," U.S. Department of Energy, Morgantown, 1995.

[76] Polk Tampa Electric, "Final Public Design Report," U.S. Department of Energy, Morgantown, 1996.

[77] N. A. Hatcher, R. S. Alvis and R. H. Weiland, "Sour Water Stripper Performance in tl Presence of Heat Stable Salts," Optimized Gas Treating, Inc.

[78] L. Addington, C. Fitz, K. Lunsford, L. Lyddon and I. M. Siwek, "Sour Water: Where it comes from and how to handle it," Bryan Research and Engineering, Inc. and Verfahrenstechnik und Automatisierung GmbH.

[79] The Engineering Toolbox, "Super Boiler Efficiency," [Online]. Available: http://www.engineeringtoolbox.com/feedwater-chemistry-limits-d_1064.html. [Accessed 31 August 2015].

[80] Cansolv, "Cansolv CO_2 Capture System," Cansolv Technologies Inc., 2012.

[81] Kerestecioğlu, Ulvi and Thomas Haberle, "Handling of Trace Components for Rectisol® Wash Units," Linde Engineering, [Online]. Available: http://www.gasification.org/uploads/eventLibrary/32KEREST.pdf. [Accessed 28 August 2015].

[82] Cansolv, *Personal Communication,* Cansolv.

[83] Honeywell UOP, *Personal Communication,* Honeywell UOP.

[84] W. Barbour, R. Oommen, G. Sagun Shareef and W. M. Vatavuk, "Wet Scrubbers f Acid Gas," U.S. Environmental Protection Agency, December 1995. [Online]. Available: http://www.epa.gov/ttncatc1/dir1/cs5-2ch1.pdf. [Accessed 1 September 2015].

[85] A. Kohl and R. Nielsen, Gas Purification, Fifth Edition ed., Houston: Gulf Publishing, 1997.

[86] F. Sowa and M. Wolf, "Investigation of Different Equipment Setups for Ammonia Wash and Desulfurization," DMT GmbH & Co. KG, [Online]. Available:

http://www.dmt.de/fileadmin/PDF/Broschueren/Kokereitechnik/Investigation_of_fferent_equipment_setups_for_ammonia_wash_and_desulfurization.pdf. [Access 1 September 2015].

[87] Quick Cut Gasket & Rubber Corporation, "Chemical Resistance Chart," 2014. [Online]. Available: http://www.quickcutgasket.com/pdf/Chemical-Resistance-Chart.pdf. [Accessed 1 September 2015].

[88] Nickel Development Institute, "High-Temperature Characteristics of Stainless Stee Nickel Development Institute, [Online]. Available: http://www.nickelinstitute.org/~/Media/Files/TechnicalLiterature/High_Temperat CharacteristicsofStainlessSteel_9004_.pdf#page=. [Accessed 30 October 2014].

[89] J. Cabe and M. Elliott, "FutureGen Project Report," U.S. Department of Energy, 20

[90] Sandmeyer Steel Company, "Stainless Steel Plate," [Online]. Available: https://www.sandmeyersteel.com/317LMN.html. [Accessed 12 December 2017].

[91] General Electric Energy Power & Water, "Water & Process Technologies," Genera Electric Energy, [Online]. Available: http://www.ge.com/in/sites/www.ge.com.in/files/GE-recycle-water-with-zero-liquid-discharge.pdf. [Accessed 31 August 2015].

[92] General Electric Energy Power & Water, "Zero Liquid Discharge (ZLD). Brine Concentrators and Evaporators," General Electric Energy, [Online]. Available: http://www.gewater.com/products/equipment/thermal_evaporative/brine_cor ntration.jsp. [Accessed 28 March 2011].

[93] Dan Sampson, *Personal communication,* Worley Parsons.

[94] Black & Veatch, "Bituminous Baseline Update for Compliance with Effluent Limitation Guidelines (ELG)," U.S. Department of Energy, Pittsburgh, PA, 2017.

[95] Electric Power Research Institute, "Coal Gasification Guidebook: Status, Applications, and Technologies," EPRI, December 1993.

[96] E. V. Holthoon, "Shell Coal Gasification – Leading Technology Across Multiple Applications," Gasification Technologies Conference, October 6, 2009.

[97] H. J. Van Der Ploeg, T. Chhoa and P. L. Zuideveld, "The Shell Coal Gasification Process for the US Industry," Gasification Technology Conference, Washington, D.C., October 2004.

[98] P. Amick, "Gasification of Petcoke using the E-Gas Technology at Wabash River," *Gasification Technologies Conference*, San Francisco, 2000.

[99] D. Breton and C. Keeler, "Comparative IGCC Performance and Costs for Domes Coals," Gasification Technologies Council, San Francisco, CA, October 2005.

[100] R. Rigdon and L. Schmoe, "The IGCC Reference Plant," Gasification Technologie Conference 2005, San Francisco, CA, October 2005.

[101] GE Power, *Personal communication,* General Electric Power, 2018.

[102] Global Syngas Technologies Council, "The largest, mega coal-chemical project selects GE large quench technology," [Online]. Available: https://www.globalsyngas.org/uploads/downloads/GE-on-Shenhua-Yulin.pdf. [Accessed 9 October 2018].

[103] R. Rigdon and K. Miles, "The Cleaner Coal Option," *Power Engineering Internatior* July 2006.

[104] WorleyParsons, "Steam Conditions for PC Plant Designs Market Based Advanced Coal Power Systems Comparison Study," June 2005.

[105] R. Storm, "Optimizing Combustion in Boilers with Low NOx Burners," *Power Magazi* October 1993.

[106] R. Gansley, D. Love, P. Rader and H. Lancaster, "Cliffside Modernization Project ACQS," Presented at EUEC, Phoenix, 2013.

[107] P. Wieslanger, "Fabric Filters for Power Applications," ALSTOM Power Environment Systems AB, 2000.

[108] C. Senior, "Mercury Oxidation across SCRs in Coal-Fired Power Plants," in *Mercury Control Technology R&D Program Review*, Pittsburgh, PA, 2005.

[109] S. Hinton, A. Jimenez, C. Dene and C. Tyree, "Enhanced Mercury Control by Managing SCR Systems for Mercury and NOx," Baltimore, August 19-23, 2012.

[110] C. Senior and S. Johnson, Impact of Carbon-in-Ash on Mercury Removal Across Particulate Control Devices in Coal-Fired Power Plants, Energy & Fuels, 2005.

[111] M. Gadgil, "20 Years of Mercury Re-emission – What Do We Know?," in *Power Plar Pollutant Control and Carbon Management "MEGA"*, Baltimore, 2016.

[112] N. Pollack, "Novel Carbon Based Sorbents for High SO3 Applications," Arlington, October 26-29, 2009.

[113] Memorandum from Robert Wayland to William H. Maxwell, *Revised New Source Performance Standards (NSPS) Statistical Analysis for Mercury Emissions,* Office of Air Quality Planning and Standards, EPA, May 31, 2006.

[114] Environmental Protection Agency, *Standalone Documentation for EPA Base Cas 2004 (V.2.1.9) Using the Integrated Planning Model,* Washington, D.C., Septembe 2005.

[115] R. K. Srivastava, J. E. Staudt and W. Jozewicz, *Preliminary Estimates of Performanc and Cost of Mercury Emission Control Technology Applications on Electric Utility Boilers: An Update,* Washington, D.C., 2004.

[116] Environmental Protection Agency, "Steam Electric Power Generation Point Sourc Category: Final Detailed Study Report. EPA 821-R-09-008," [Online]. Available: https://www.epa.gov/sites/production/files/2015-06/documents/steam-electric_detailed_study_report_2009.pdf. [Accessed 15 May 2017].

[117] Electric Power Research Institute, "Flue Gas Desulfurization (FGD) Wastewater Characterization," March 2006. [Online]. Available:

http://www.epri.com/abstracts/Pages/ProductAbstract.aspx?ProductId=000000 0001010162&Mode=download. [Accessed 15 May 2017].

[118] National Energy Technology Laboratory, "Screening Analysis: Integrated Compressor Intercooling," U.S. Department of Energy, Pittsburgh, PA, January 20

[119] Environmental Protection Agency, "Technical Development Document for the Effluent Limitations Guidelines and Standards for the Steam Electric Generating Point Source Category," Environmental Protection Agency, Washington, D.C., 20

[120] Kansas City Power & Light, *Personal communication, Kansas City Power & Light,* July 2017.

[121] W. G. Gorman and J. K. Reinker, "Steam Turbines for Utility Applications," GE Pow Generation, 1994.

[122] GE Power, "7F Heavy Duty Gas Turbine," November 2018. [Online]. Available: https://www.ge.com/content/dam/gepower-pgdp/global/en_US/documents/product/gas%20turbines/Fact%20Sheet/2017-prod-specs/GEA32930A%207F_Power_Plants_R1.pdf. [Accessed 6 March 2019].

[123] GE Power, "7HA Power Plants," November 2018. [Online]. Available: https://www.ge.com/content/dam/gepower-pgdp/global/en_US/documents/product/gas%20turbines/Fact%20Sheet/2017-prod-specs/7ha-power-plants.pdf. [Accessed 6 March 2019].

[124] Modern Power Systems, "GE's new all-air-cooled H class turbine," April 2014. [Online]. Available: https://www.modernpowersystems.com/features/featurege new-all-air-cooled-h-class-turbine-4212530/. [Accessed 6 March 2019].

[125] Gas Turbine World, Gas Turbine World: 2016 Performance Specs Volume 46 No. 1 2016.

[126] Office of the Federal Register, "Proposed Rules Vol. 82 No. 63," 4 April 2017. [Onlin Available: https://www.govinfo.gov/content/pkg/FR-2017-04-04/pdf/2017-06597.pdf. [Accessed 6 June 2019].

[127] U.S. Bureau of Economic Analysis, "Read Gross Domestic Product [GDPC1]," FRED Federal Reserve Bank of St. Louis, [Online]. Available: https://fred.stlouisfed.org/series/GDPC1/. [Accessed 12 June 2019].

[128] National Energy Technology Laboratory, "Quality Guidelines for Energy System Studies: Performing a Techno-economic Analysis for Power Generation Plants," U. Department of Energy, Pittsburgh, PA, July 2015.

[129] Investopedia, "Effective Tax Rate," 12 March 2019. [Online]. Available: https://www.investopedia.com/terms/e/effectivetaxrate.asp. [Accessed 12 June 2019].

Robert James
robert.james@netl.doe.gov

Mark Woods
mark.woods@netl.doe.gov

www.netl.doe.gov
Albany, OR • Anchorage, AK • Morgantown, WV • Pittsburgh, PA • Sugar Land, TX
(800) 553-7681

NATIONAL ENERGY TECHNOLOGY LABORATORY