An Overview, Assessment, and Thermodynamic Analysis of an Indirect (closed) Supercritical CO_2 (SCO_2) Power Cycle Configuration

ICEPAG 2014

April 1-3, 2014

Wally Shelton, Kristin Gerdes - NETL

Charles White – Noblis

Arun Iyengar - Booz Allen Hamilton

DOE/NETL-2016/1759

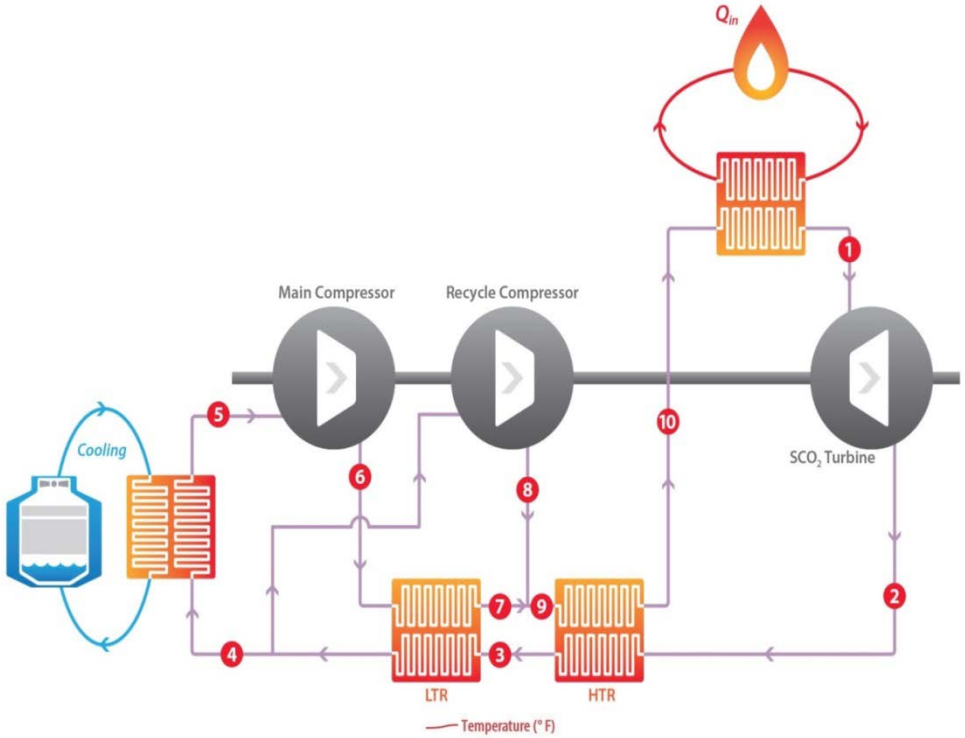

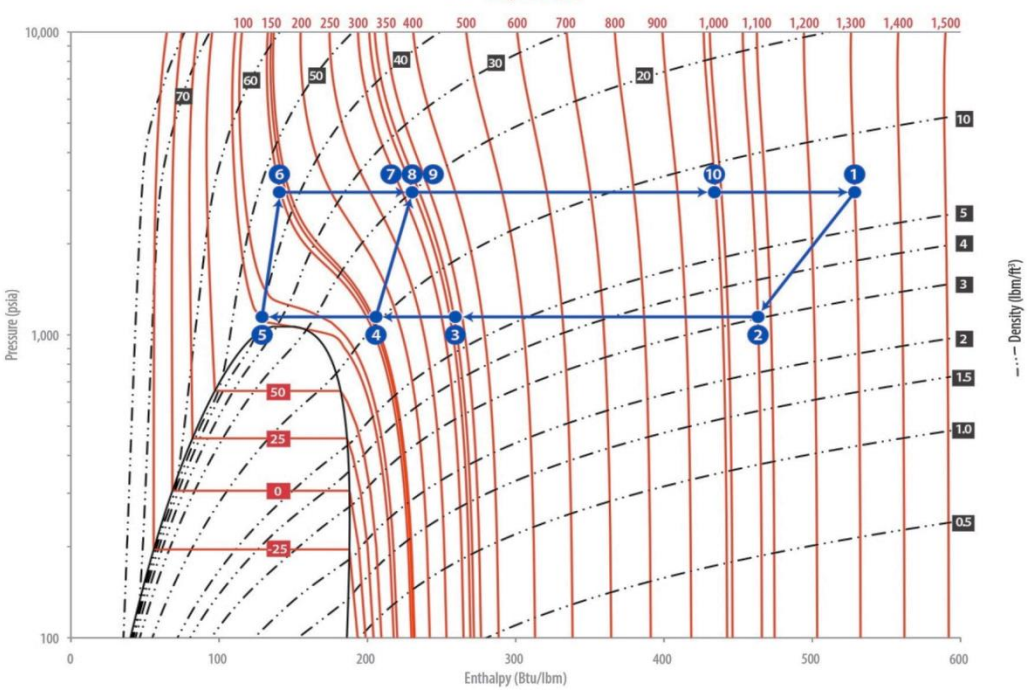

U.S. DEPARTMENT OF ENERGY | National Energy Technology Laboratory

The Office of Program Performance & Benefits

Analyses that guide and evaluate research, development and demonstration programs within NETL's Strategic Center for Coal

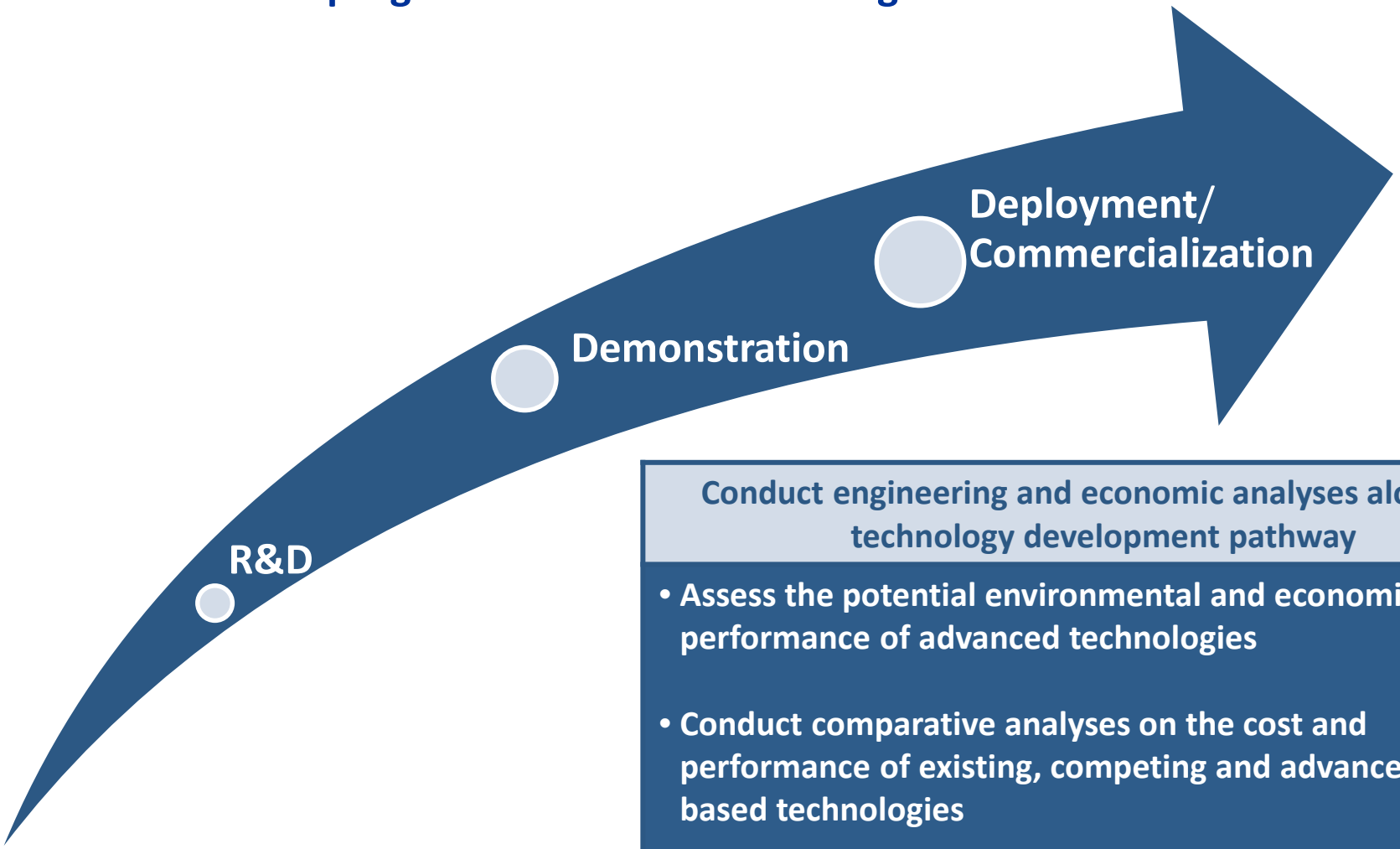

Conduct engineering and economic analyses along the technology development pathway

- Assess the potential environmental and economic performance of advanced technologies
- Conduct comparative analyses on the cost and performance of existing, competing and advanced coal-based technologies
- Forecast economic and environmental benefits of advanced coal-based technologies

Supercritical CO_2 Cycles

- Introduction
- Fundamental thermodynamic analysis of SCO_2 cycles
- Screening of coal-based heat sources
- Potential benefits for coal-based indirect SCO_2 cycles

Why SCO_2 Cycles ?

- Potential higher efficiency relative to traditional fossil energy cycles
  - *Use of recuperators reduces cycle heat rejection*
  - *SCO_2 has certain thermodynamic properties around the critical point that are beneficial (e.g. reduces recompression load)*
- Indirect cycles can be integrated with various heat sources:
  - *Nuclear, solar, geothermal, fossil (optimize at different T)*
- Reduced turbomachinery equipment sizes due to supercritical pressures may result in reduced capital costs
  - *Turbine at $<$ 1/10 of a steam turbine (same P and T)*
- Synergies with material programs for high temperature steam cycles
- SCO_2 may enable higher peak temperatures since it is less corrosive than steam

SCO2 Cycles -- Indirect .vs. Direct

- **Indirect:**
  - CO_2 working fluid is used in a closed Brayton power cycles where heat input occurs using a heat exchanger or heat exchange surfaces
  - Cycles usually operates above the CO_2 critical point
  - Any CO_2 capture occurs outside of the indirect cycle
  - Heat sources include fossil, nuclear, solar, and geothermal

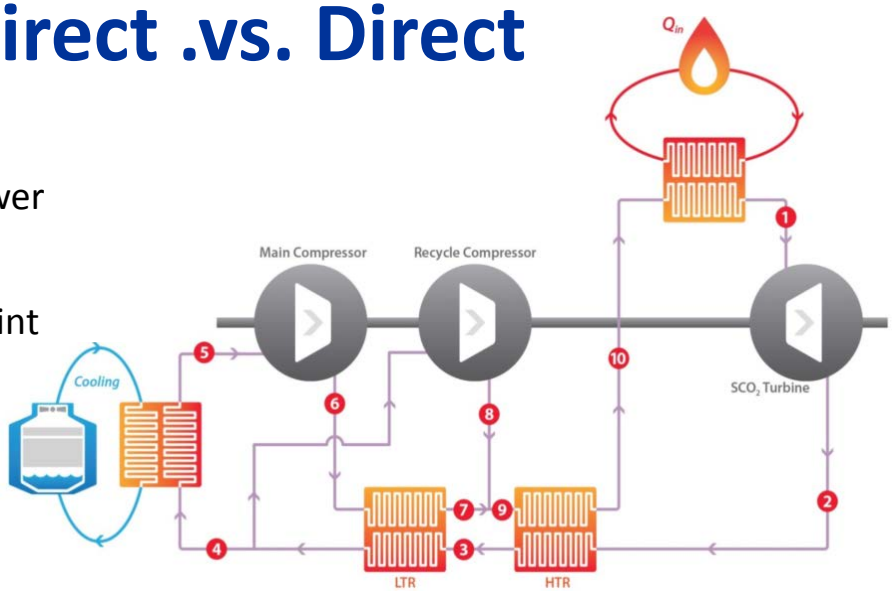

- **Direct:**
  - Recycling work fluid (primarily CO_2) gains heat by an oxy-combustion process directly with the fuel
  - Exhaust stream is sent to a turbine for power recovery
  - Recuperators/heat integration are used to transfer heat to recycling fluid
  - Requirement for removal of impurities/water from recycling fluid
  - CO_2 generated by combustion is removed for carbon capture at a high pressure as a slip stream from the recycling fluid
  - Heat sources are fossil-based

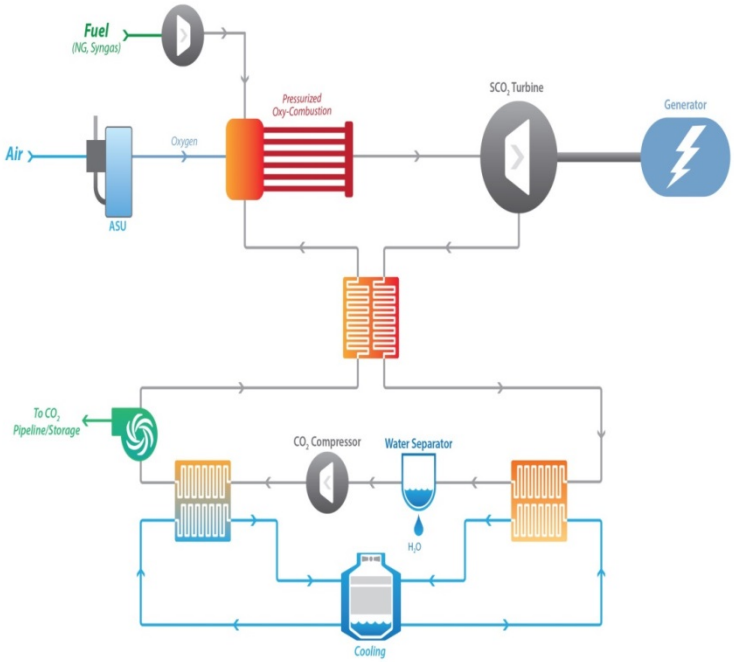

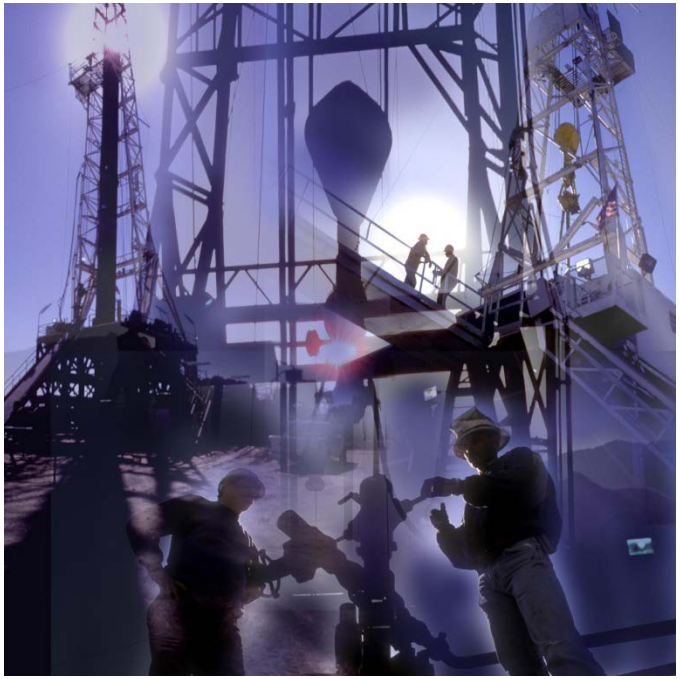

FUNDAMENTAL THERMODYNAMIC ANALYSIS OF SCO_2 POWER CYCLES

Basis for Thermodynamic Analysis

- **Focus on indirect SCO_2 cycles**
- **Generic heat source with no associated temperature or temperature profile**
- **Parameters examined:**
  - Location on the T-P-V surface
  - Configuration (recuperated, reheat, etc.)
  - Turbine inlet temperature, pressure ratio
  - Turbine exit pressure, recompression options (atm or above critical point)
  - Compressor and turbine efficiency
  - Heat exchanger designs/temperature approach
  - Condenser cooling temperature
  - Working fluid (Ar, N_2, CO_2)
- **Cycle Simulations:**
  - ASPEN PLUS

Indirect Brayton Cycle

Simple

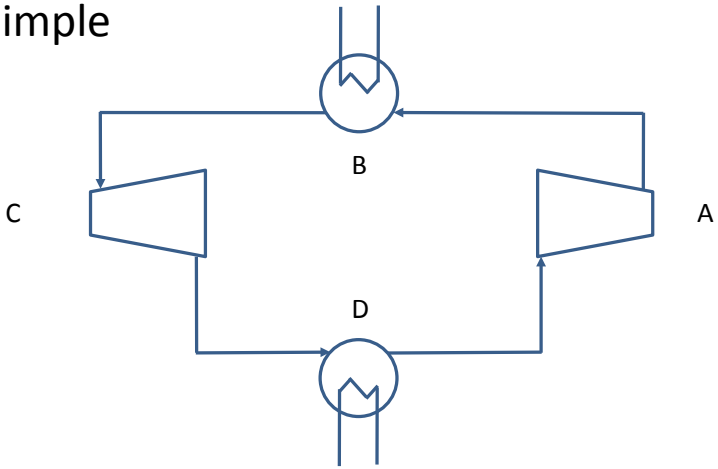

Recuperated

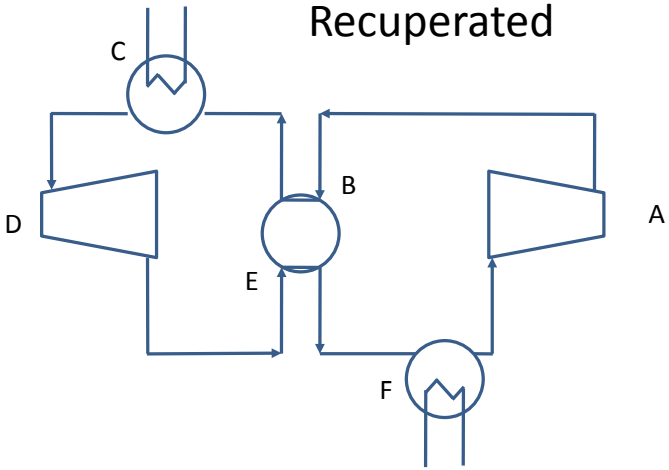

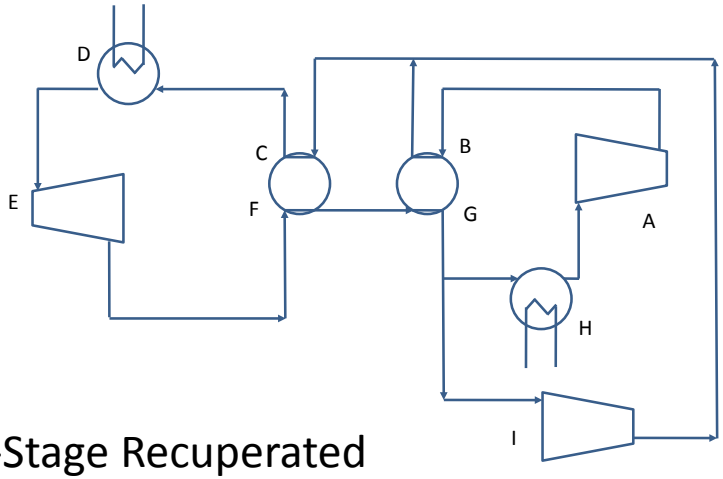

2-Stage Recuperated

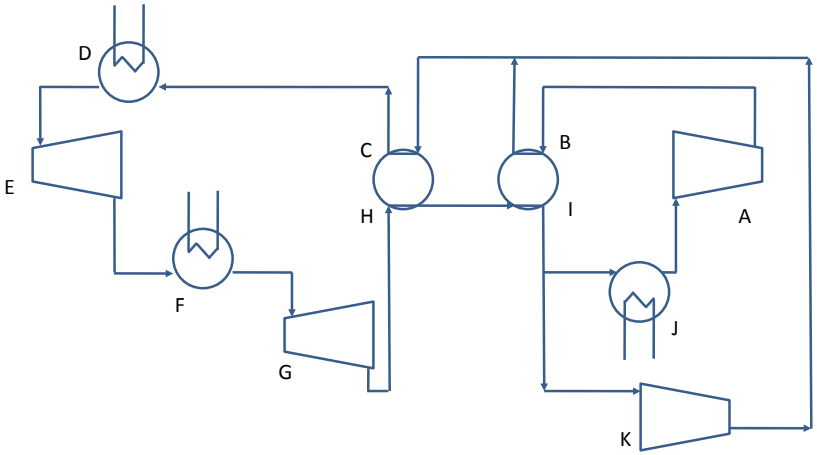

2-Stage Recuperated, Reheat

CO_2 Pressure-Enthalpy Diagram

2-Stage Recuperated

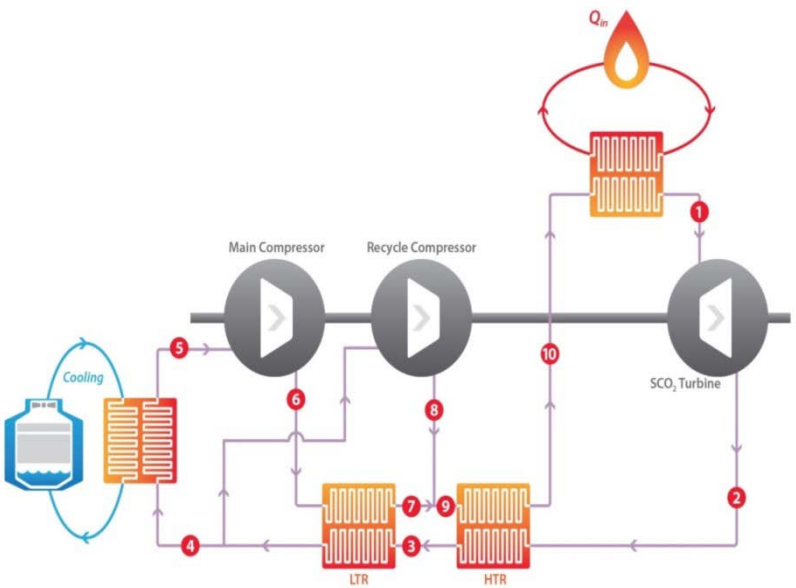

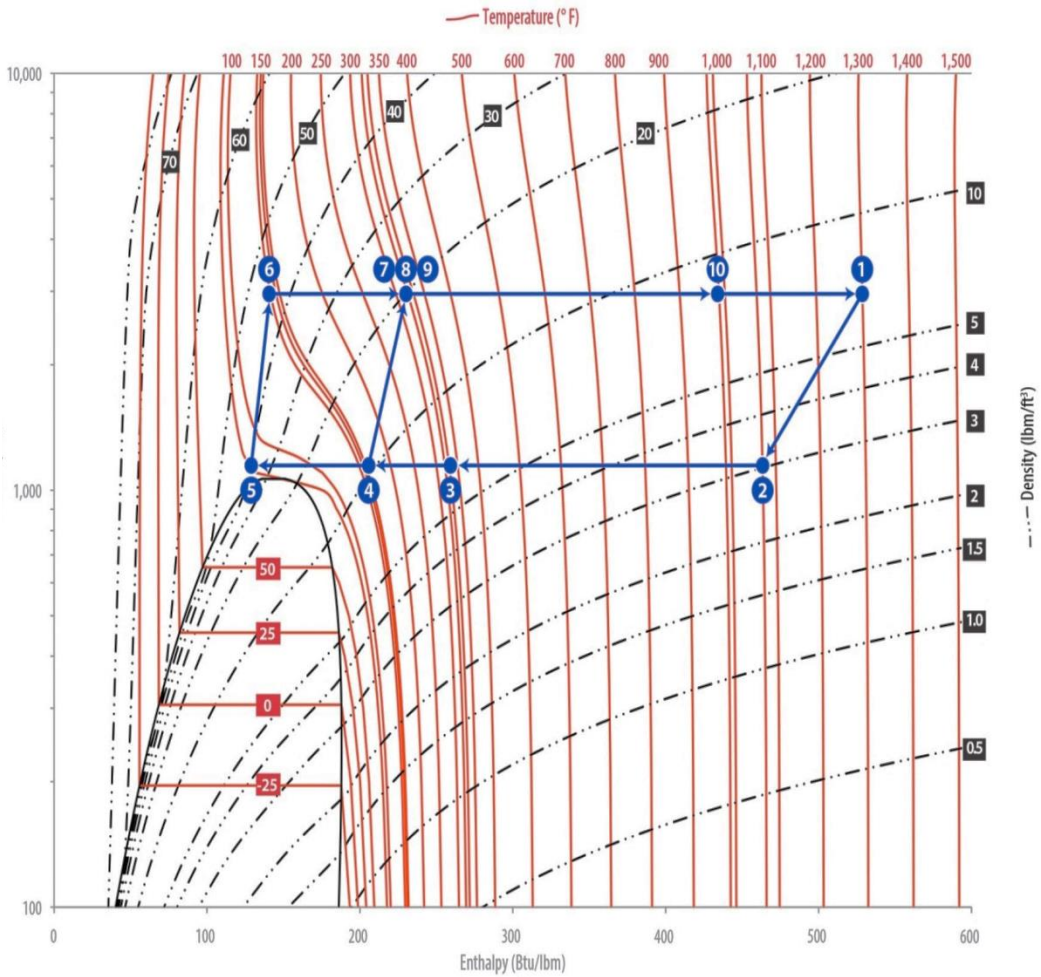

Indirect Fired, Recuperated

Cycle Efficiency versus Pressure Ratio, η = 0.9, TIT = 1300 °F

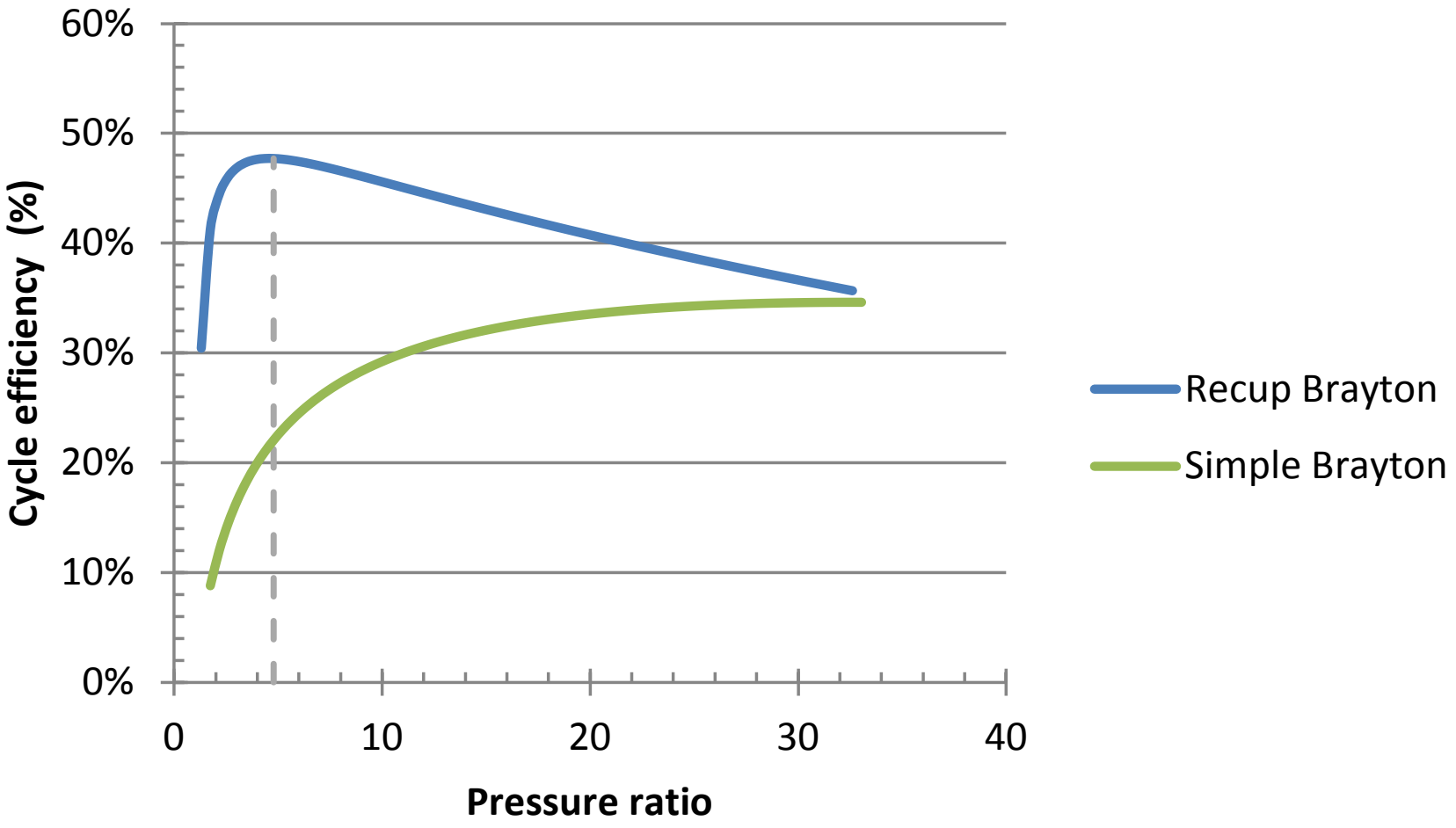

Indirect Fired, Recuperated

Heat Duties versus Pressure Ratio

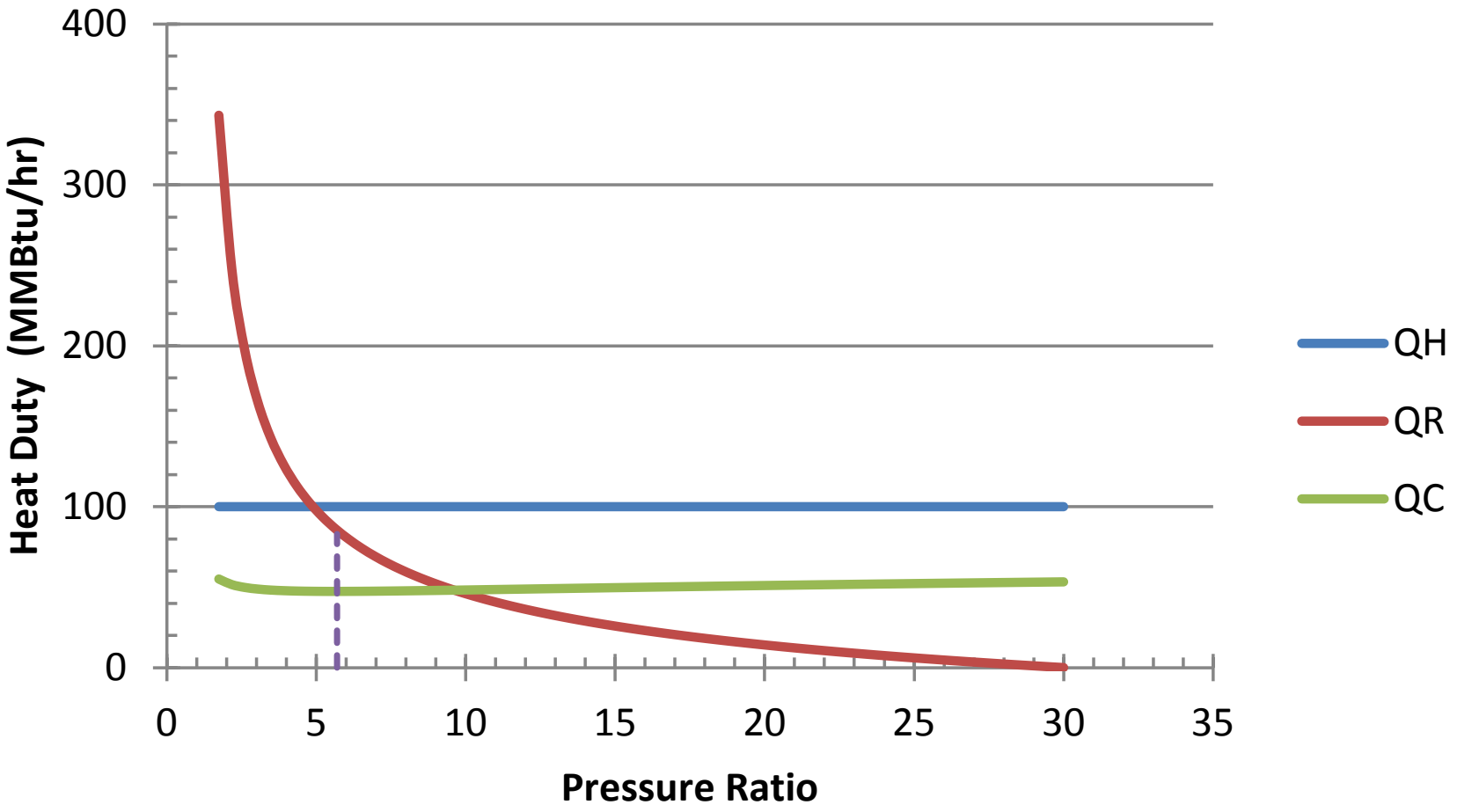

Thermodynamic Analysis for Closed, 2-Stage Recuperated

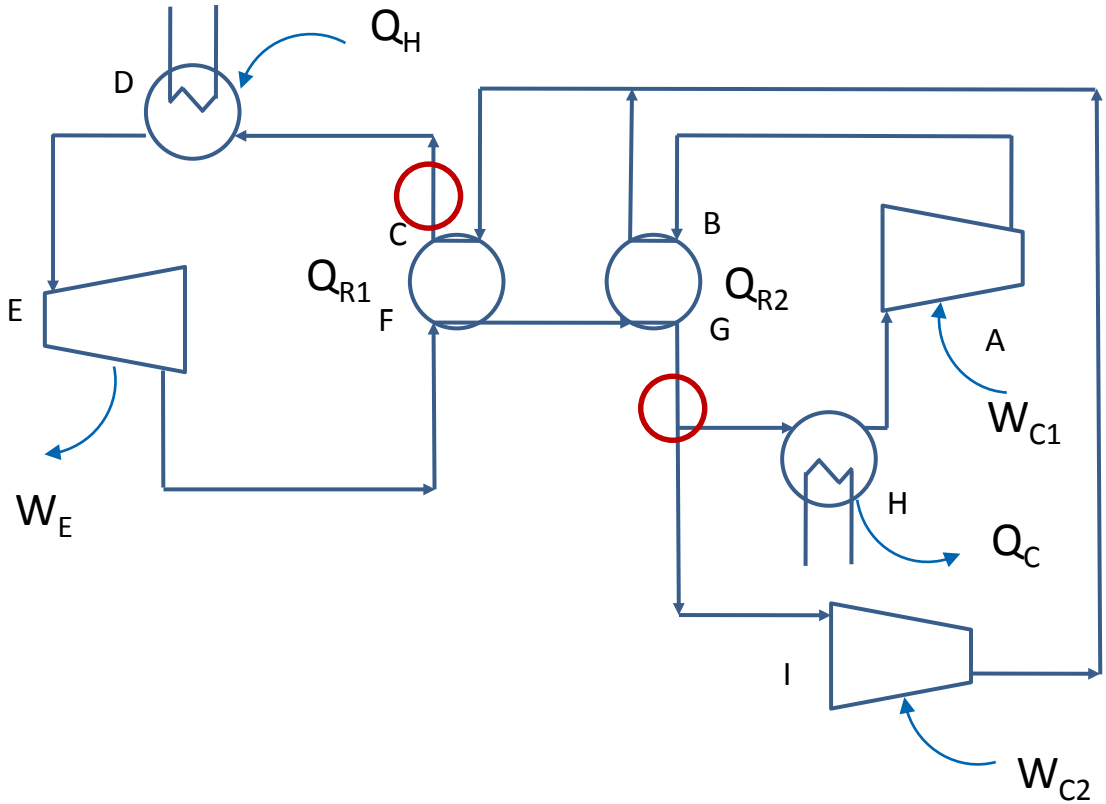

- Increasing the split fraction (SF),
  - reduces Qc (heat rejected)
  - decreases recuperator temp approach (dt)
- Improves cycle efficiency until
  - impractical dt
- SF =0, cycle becomes 1 stage recuperated
- SF = ~ 0.37, ~optimized

Indirect Fired, Closed, 2-Stage Recuperated

Impact of Turbine and Compressor Efficiency

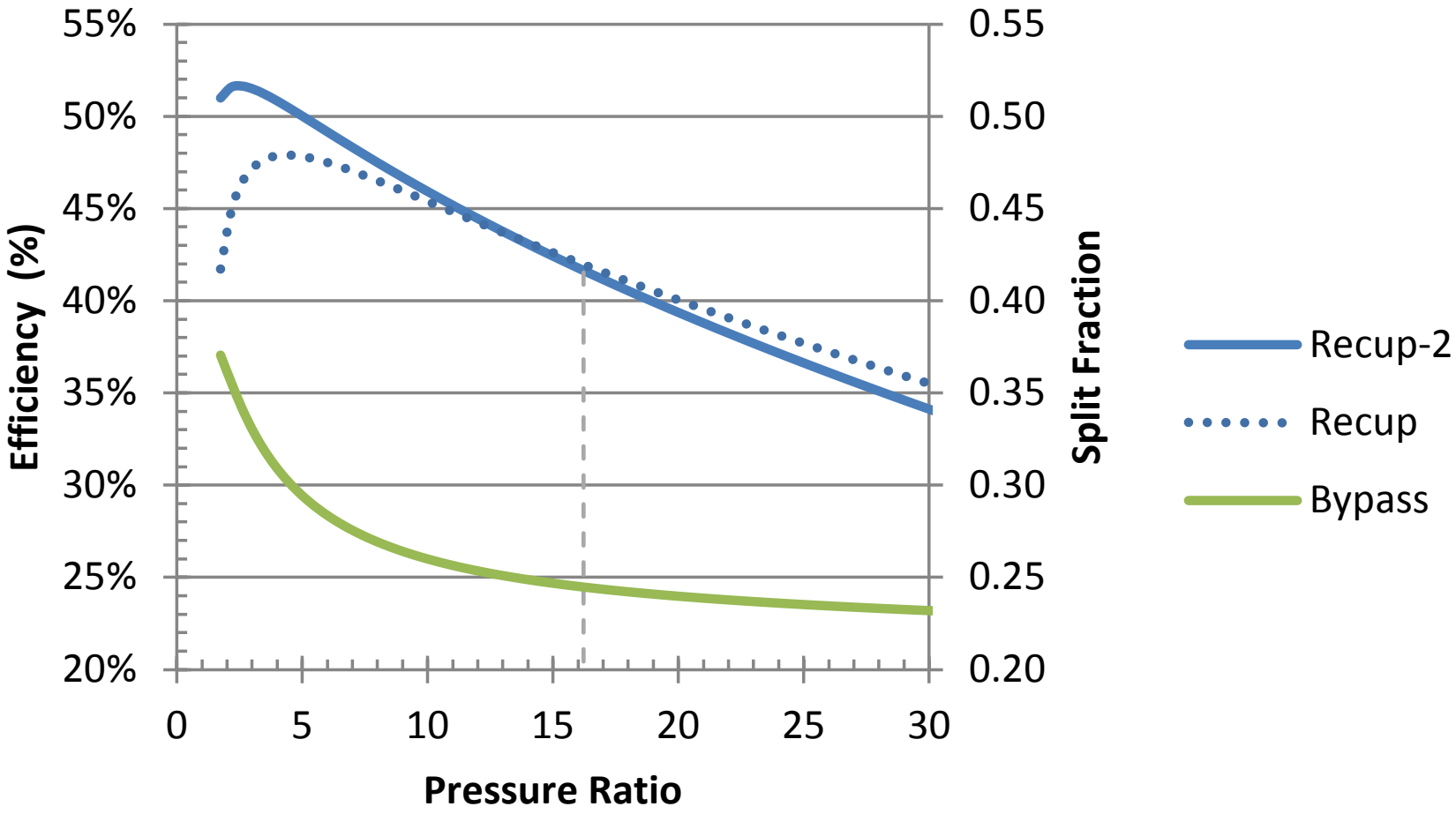

Indirect Fired, 2-Stage Recuperated

Impact of Turbine Inlet Temperature

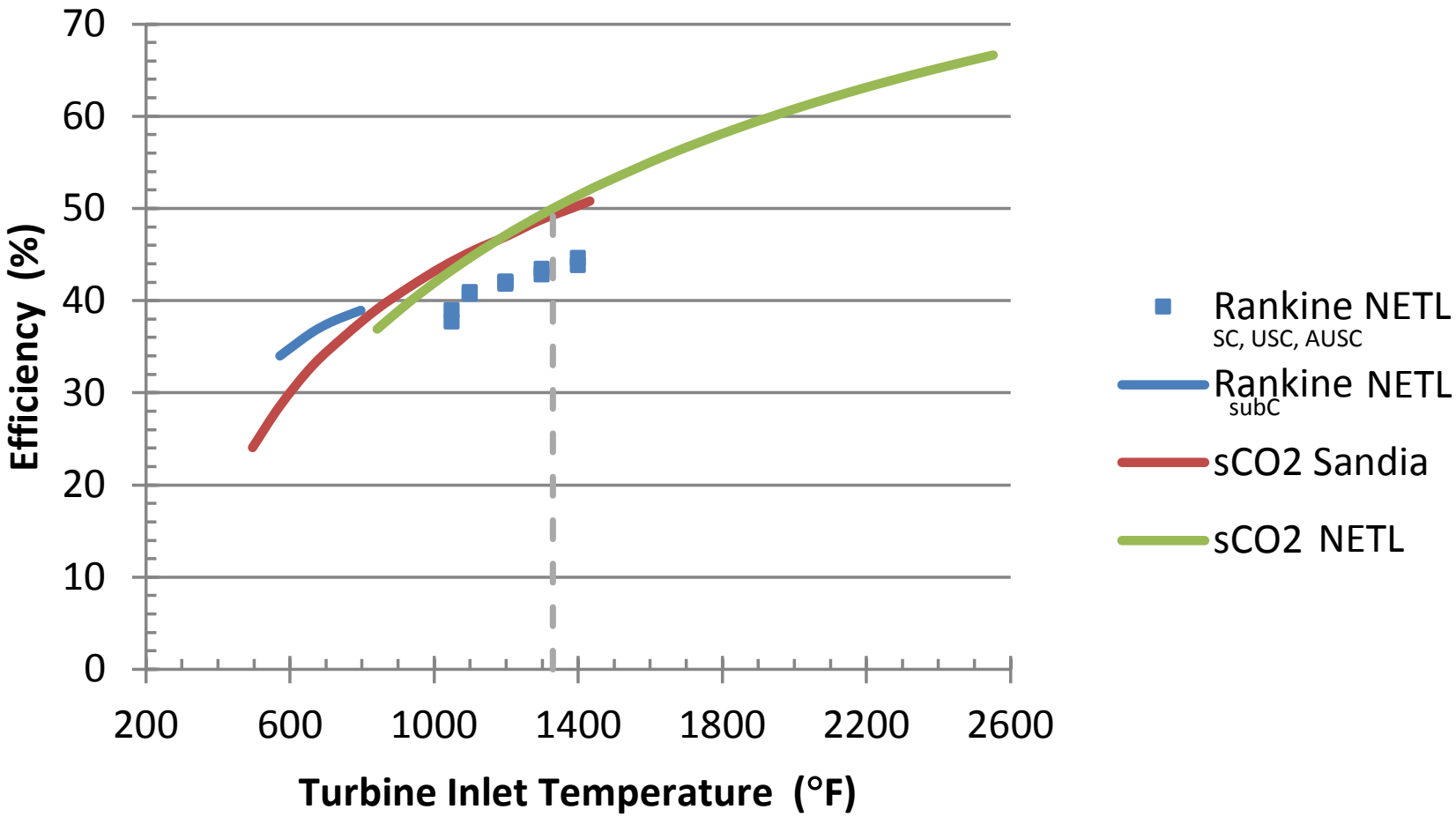

Indirect Fired, Recuperated

Summary of Results

- **Recuperation improves cycle efficiency of SCO_2 cycles for low to moderate pressure ratios but results in large heat transfer requirements**
- **Cycle efficiency show a maximum efficiency at relatively low pressure ratios**
- **Optimizing split factor has a significant effect in improving cycle efficiency (recuperator effectiveness)**
- **Increasing Turbine inlet temperature improves Cycle Efficiency**

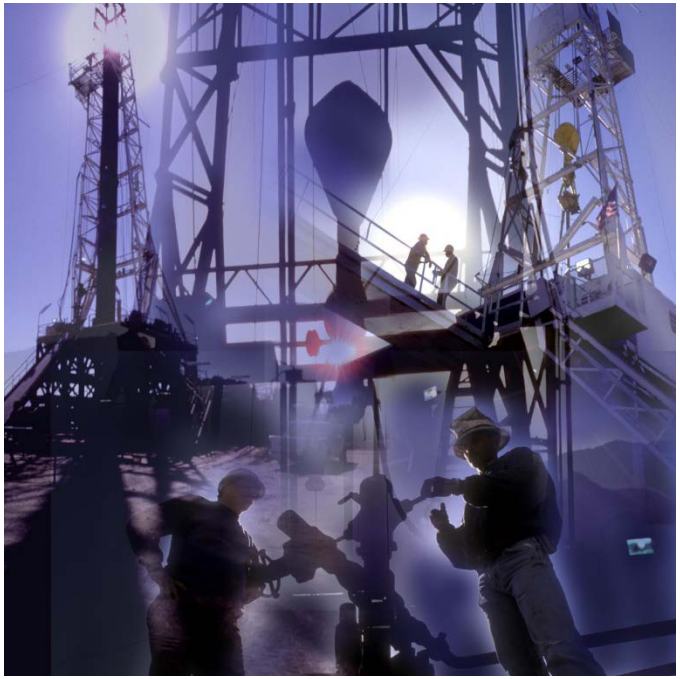

SCREENING OF FOSSIL-BASED HEAT SOURCES FOR INDIRECT SCO_2 CYCLES

Matching Heat Sources to Power Cycles

Minimizing Bottoming Cycles

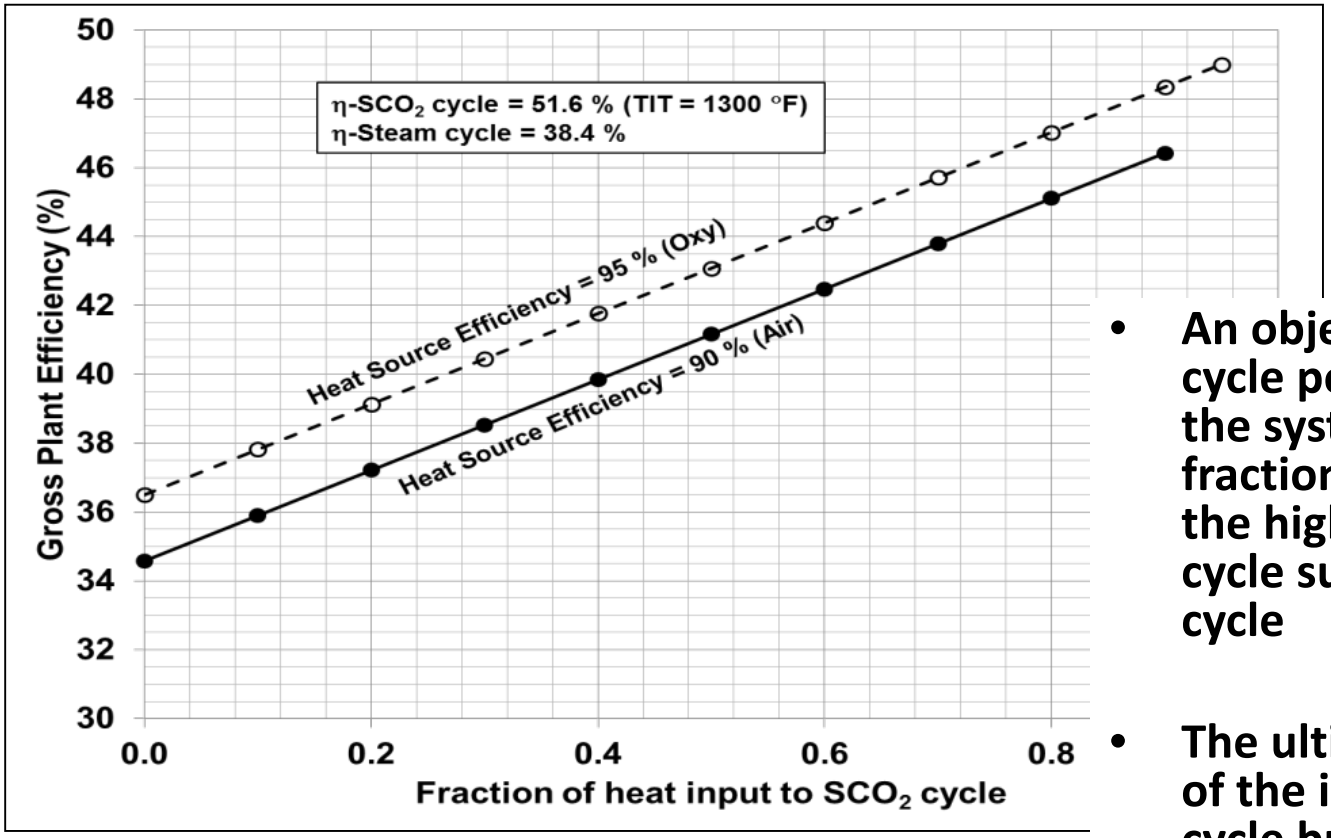

- **An objective with combined cycle power plants is to design the system to maximize the fraction of input heat going to the higher efficiency topping cycle such as a sCO_2 Brayton cycle**
- **The ultimate goal is to use all of the input heat in the topping cycle but this is often difficult without wasting lower level heat**

Matching Heat Sources to Power Cycles

T-Q Diagram for Conventional Coal-Based Systems and example indirect SCO_2 cycle

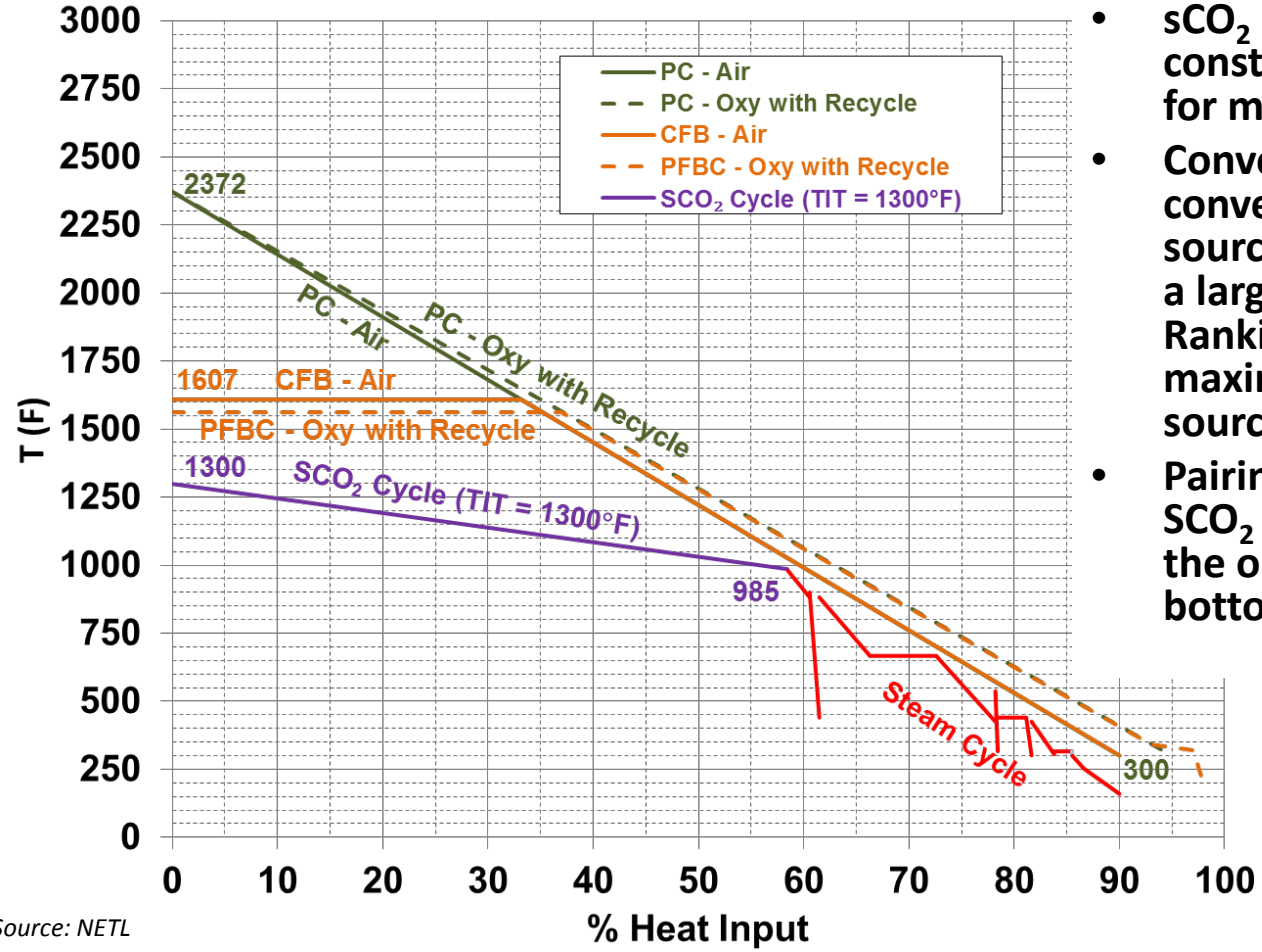

Source: NETL

- **sCO_2 cycle requires a relatively constant temperature heat source for maximum plant efficiency.**
- **Conventional PC, CFB, and conventional oxy-combustion heat sources provide a heat source with a large slope of T versus Q. Steam Rankine cycles have been tuned to maximize the use of this heat source temperature profile.**
- **Pairing theses heat sources and SCO_2 power cycle does not meet the objective of minimizing the bottoming cycle.**

Matching Heat Sources and Power Cycles

T-Q Profiles of Modified Coal-Based Systems

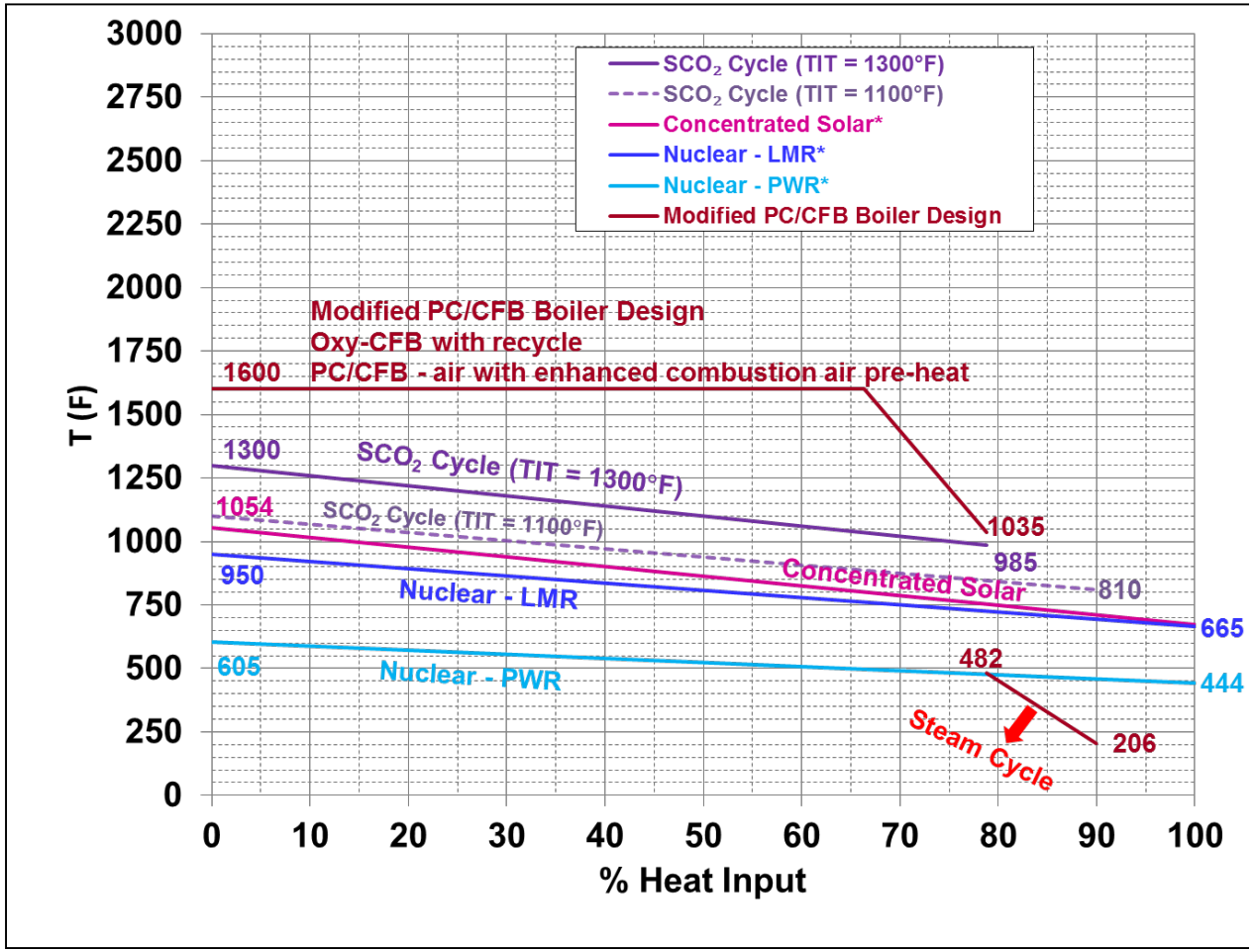

- **Adding enhanced preheat for combustion air or CO_2 recycle enables conventional PC, CFB, and PFBC air and oxy heat sources to be tailored to match the T versus Q profile required for a sCO_2 cycle.**

- **Modifications allow multiple coal-based systems (air, oxy, CFB, etc) to serve as a heat source for indirect SCO_2 power cycles while meeting the objective of minimizing the bottoming cycle.**

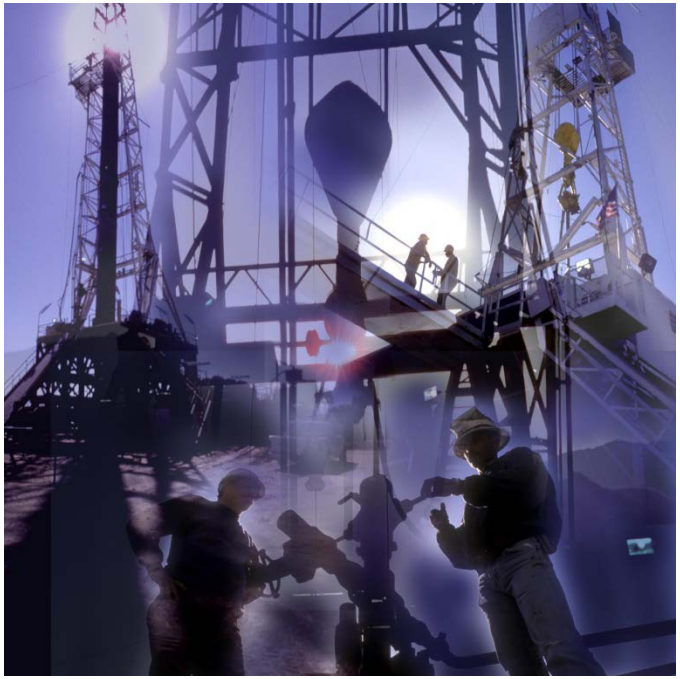

POTENTIAL BENEFITS FOR COAL-BASED INDIRECT SCO_2 CYCLES

Potential Benefits for Coal-Based Indirect SCO_2 Cycles

- **Applicable to multiple coal-based platforms (air and oxygen-fired, PC, CFB, PFBC)**
  - Coal combustor modifications (and associated costs) needed to match temperature-enthalpy profile of SCO_2 cycles of interest
- **Substantial efficiency improvements anticipated as shown in table below**
  - Varies based on temperature, specific cycle configuration and heat integration
- **Significant cost uncertainties associated with SCO_2 power island (eg. recuperators) and combustor modifications**
  - Requires use of sensitivity analysis on cost of these sub-systems
- **Result: SCO_2 cycles may provide 5-15% reduction in COE**
  - Compare to CCRP target of 20% *(consistent with $40/tonne cost of CO_2 capture)*
  - Gap to target met by advances such as 2nd Gen post-combustion capture, ASU, CO_2 purification, etc.

Power Cycle	Net Plant HHV Efficiency Improvement	COE Change Attributable to Advanced Power Cycle	
	• in coal plants with 90% capture • relative to SC steam cycle[1]	Low Cost[3]	High Cost[3]
AUSC Steam[2] 760°C (1400°F)	+3.5%pts	-7 to -8%	+1 to -0%
SCO_2 650°C (1200°F)	+3 to 5%pts	-6 to -11%	+2 to -3%
SCO_2 760°C (1400°F)	+5 to 8%pts	-10 to -16%	-2 to -9%

[1]SC = Supercritical 3500 psig/1100°F/1100°F
[2]AUSC = Advanced ultrasupercritical 5000 psig/1400°F/1400°F consistent with program targets
[3]"Low Cost" assumes combustor + power island costs same as SC steam case;
"High Cost" assumes these sub-systems cost 40% more than for SC steam

No reduction
0 to 8%
> 8%

Coal-Based Supercritical CO_2 Cycles

Cost Uncertainties

- **Minimal information available on SCO_2 power island costs**
  - Turbomachinery expected to have lower costs due to lower pressure ratios and greater power density of SCO_2 relative to steam cycles
  - Configurations achieving high efficiency requires use of recuperators with large heat transfer areas; costs for recuperators are under investigation including identifying novel technologies
    - eg. Microchannel heat exchangers that have 20-100 times greater compactness factor (heat transfer area to volume ratio) than conventional shell and tube exchangers
  - In general, achieving higher efficiencies requires additional cost (i.e. advanced materials, complex cycles with more equipment, lower temperature approaches requiring larger heat exchangers, etc.)
- **Modifications to base coal plant anticipated for most configurations which will likely increase cost of the combustor and associated heat transfer piping**
- **Cost sensitivity approach for this analysis*:**

	Adv. System Cost (Power Island + Coal Combustor) / Ref. System Cost (Power Island + Coal Combustor)
Low	100%
High	140%

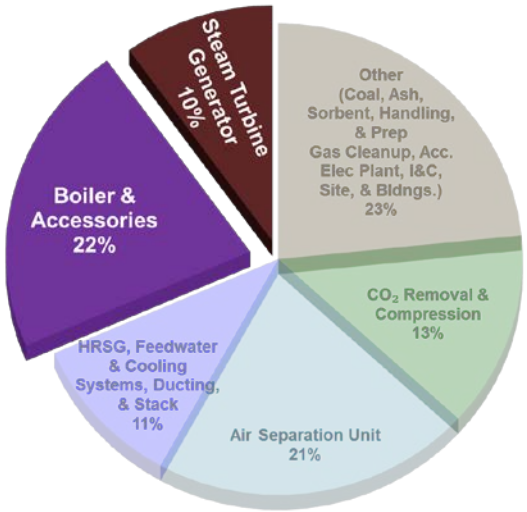

**Assumes all cost changes in total plant cost come from power island and coal combustor cost, which represent 32 % of the total plant cost of the reference SC oxycombustion system*

Cost-Efficiency Trade-off for Adv. Power Cycles

Cost of Electricity

Reference: SOA SC Oxy-combustion

$0/tonne CO_2 Revenue

550 MW

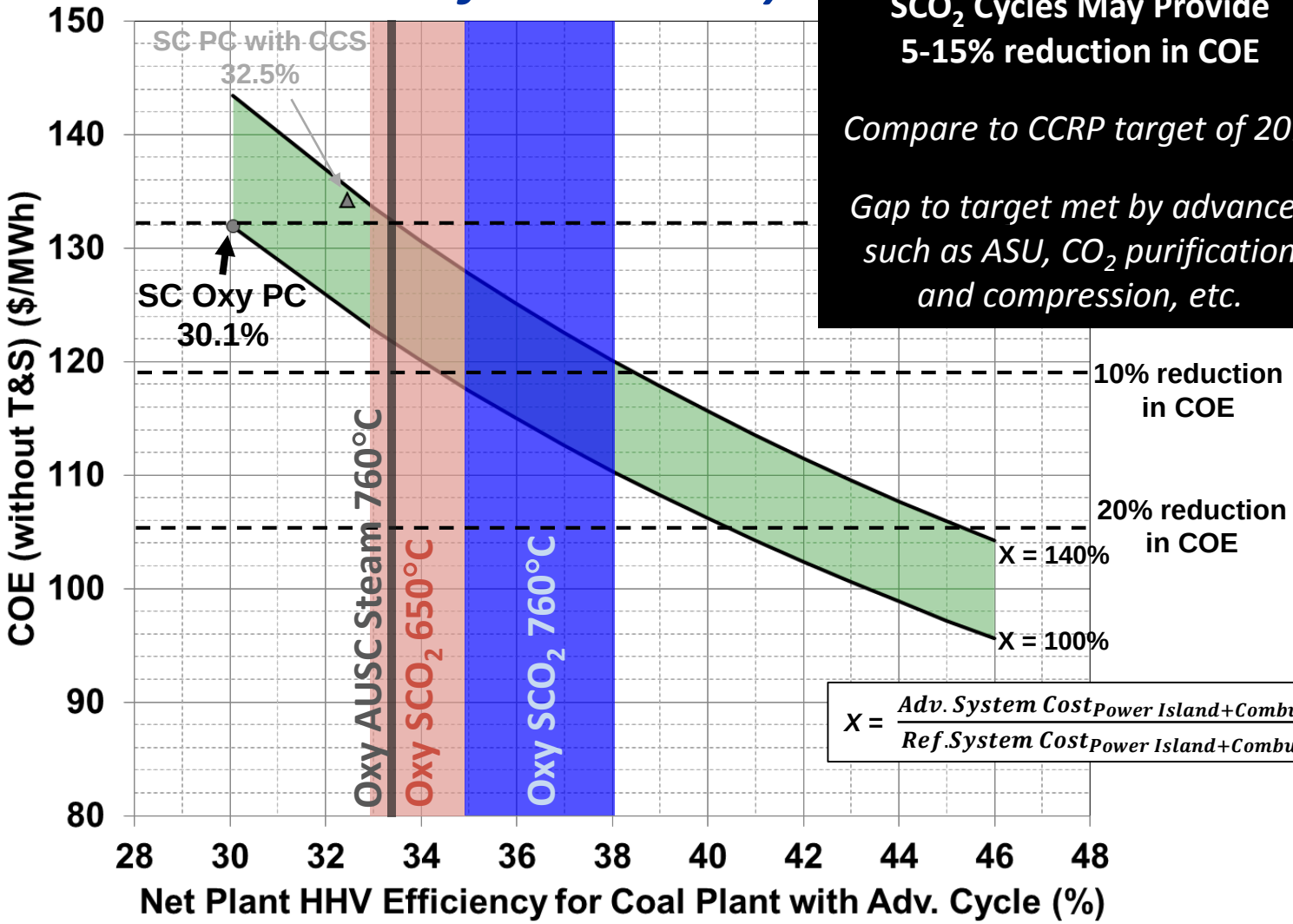

SCO_2 Cycles May Provide 5-15% reduction in COE

Compare to CCRP target of 20%

Gap to target met by advances such as ASU, CO_2 purification and compression, etc.

$$X = \frac{Adv.\ System\ Cost_{Power\ Island+Combustor}}{Ref.System\ Cost_{Power\ Island+Combustor}}$$

Source: NETL

Indirect SCO_2 Power Cycle Analyses

Conclusions

- **Indirect SCO_2 power cycles have the potential for significant efficiency gains over conventional steam cycles; key parameters include:**
  - Configuration (recuperation, etc.)
  - Temperature
- **Indirect SCO_2 power cycles are applicable to multiple coal-based platforms, but require some modifications to match the temperature-enthalpy profile**
- **Costs associated with SCO_2 cycles are uncertain and require further investigation**
- **Coal-based SCO_2 cycles have the potential to provide a 5-15% reduction in the COE**
  - Given costs between 0 and 40% greater than the conventional boiler/combustor and power island

Back-Up

Indirect Fired, 2-Stage Recuperated

Cycle Efficiency versus Cooler Bypass Split

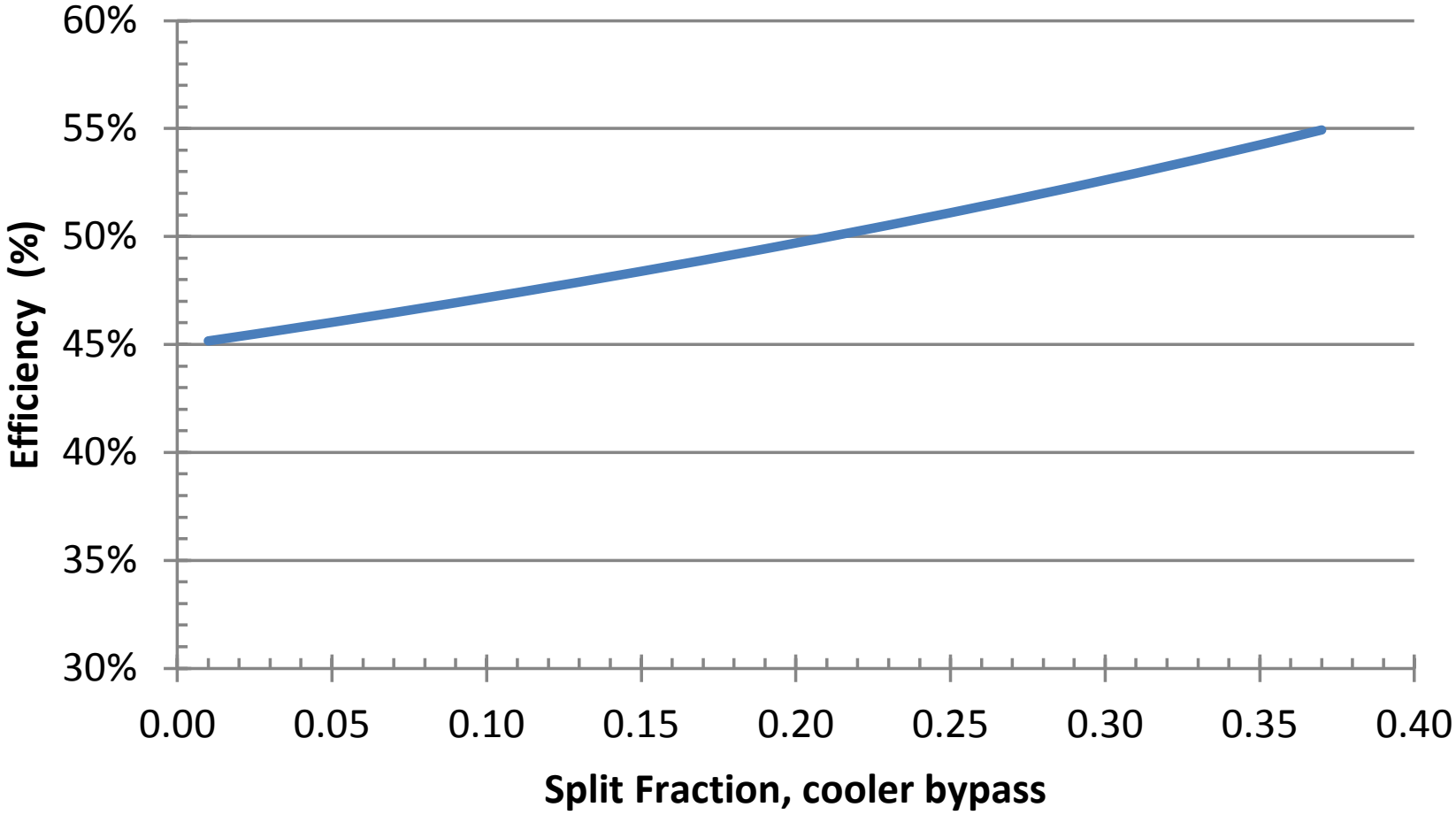

Scope of OPPB SCO_2 Power Cycle Analyses

- **Current Analyses**
  - Fundamental, heat source-independent thermodynamic analyses (complete)
  - Screening of fossil-based heat sources for indirect SCO_2 cycles (preliminary results complete)
  - Preliminary analysis on potential benefits of coal-based indirect SCO_2 power cycles (complete)
  - Full plant thermodynamic analysis of coal-based indirect SCO_2 cycles (early stages)
  - Review of third-party studies including validation and review of simulation models (ongoing)
- **Future Analyses**
  - Cost analysis of fossil fuel-based SCO_2 cycles
  - Full plant thermodynamic analysis of direct SCO_2 cycles

Indirect Fired, Closed, 2-Stage Recuperated

Maximum Cycle Efficiency versus Pressure Ratio

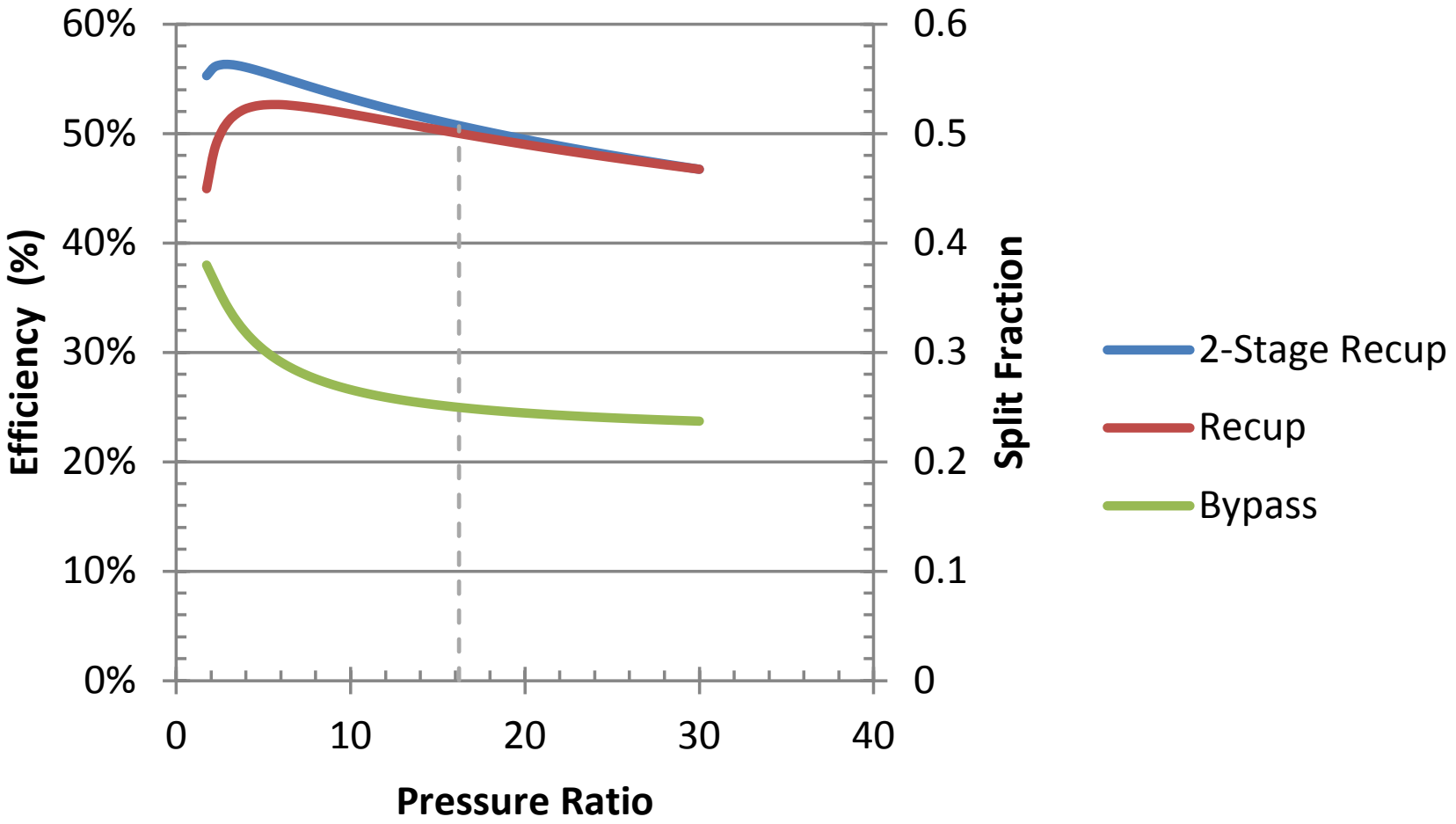

Matching Heat Sources and Power Cycles

T-Q Profiles of Modified Coal-Based Systems

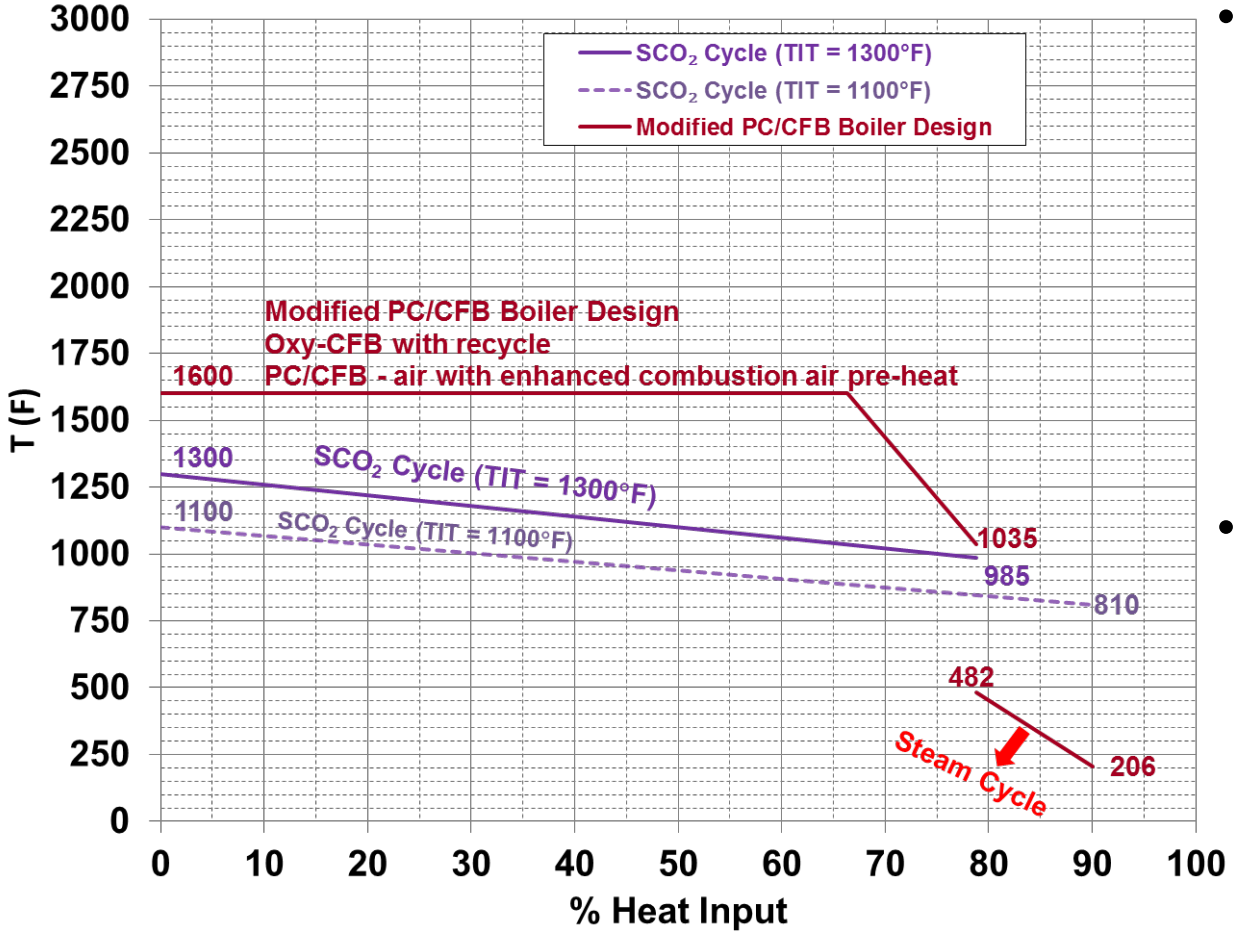

- **Adding enhanced preheat for combustion air or CO_2 recycle enables conventional PC, CFB, and PFBC air and oxy heat sources to be tailored to match the T versus Q profile required for a sCO_2 cycle.**
- **Modifications allow multiple coal-based systems (air, oxy, CFB, etc) to serve as a heat source for indirect SCO_2 power cycles while meeting the objective of minimizing the bottoming cycle.**

Indirect Fired, Recuperated

Summary of Results

- **Recuperation improves cycle efficiency of SCO_2 cycles for low to moderate pressure ratios but results in large heat transfer requirements**
- **Cycle efficiencies show a maximum efficiency at relatively low pressure ratios**
- **Optimizing recuperator effectiveness has a significant effect in improving cycle efficiency**
- **Turbomachinery efficiency has a large impact on cycle efficiency**
  - Turbine efficiency has a significantly larger impact than compressor efficiency
- **Cycle efficiency will vary with turbine exit temperature**
  - Optimum for example system with a TIT of 1300°F occurs at ~1300 psia
- **Cycle efficiency increases with turbine inlet temperature**

Indirect Fired, 2-Stage Recuperated

Maximum Cycle Efficiency versus Turbine Exit Pressure

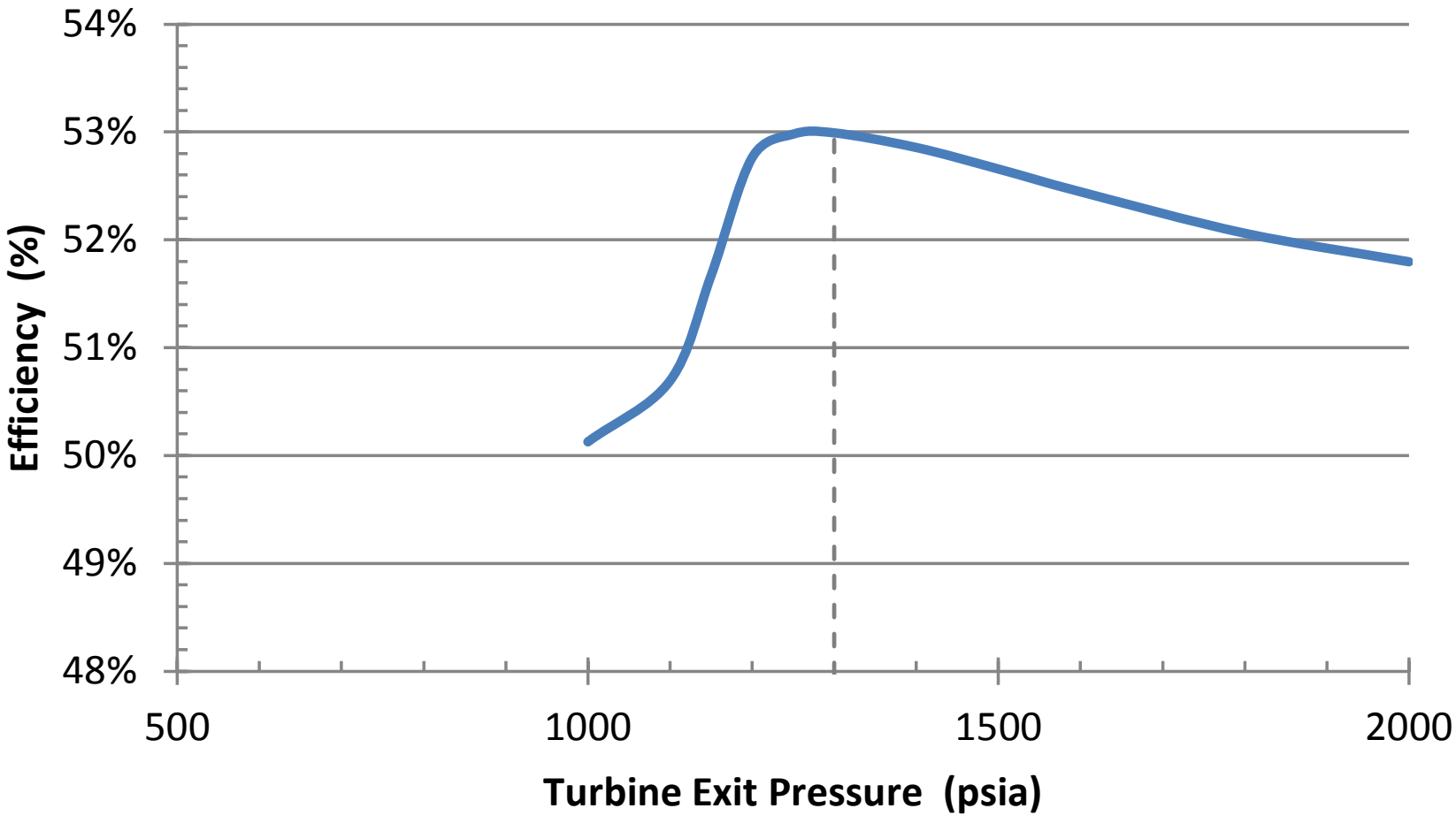

Indirect Fired, 2-Stage Recuperated

Temp-Enthalpy diagram at PR = 1.74, Split = 0.00

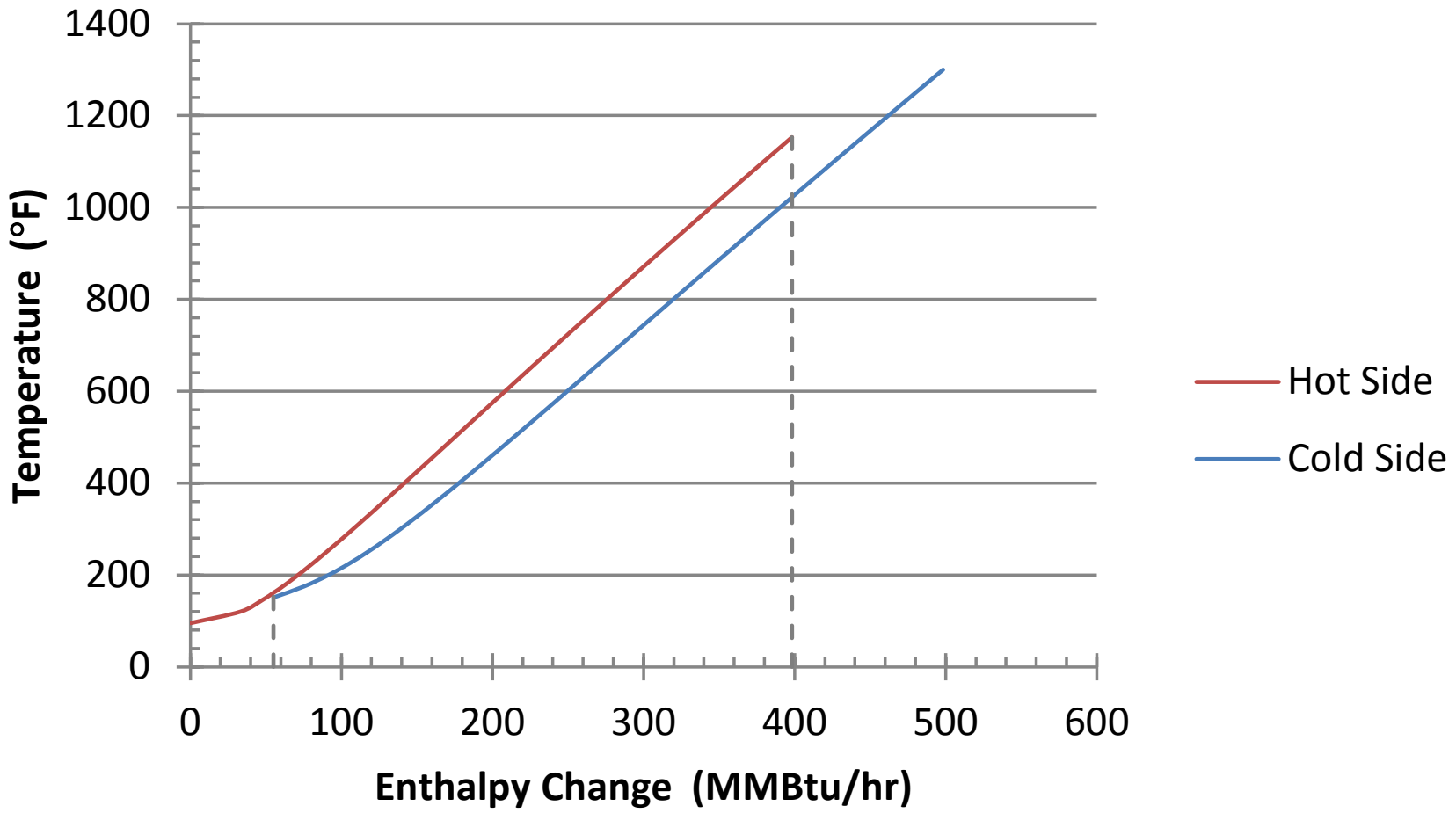

Indirect Fired, 2-Stage Recuperated

Temp-Enthalpy diagram at PR = 1.74, Split = 0.37

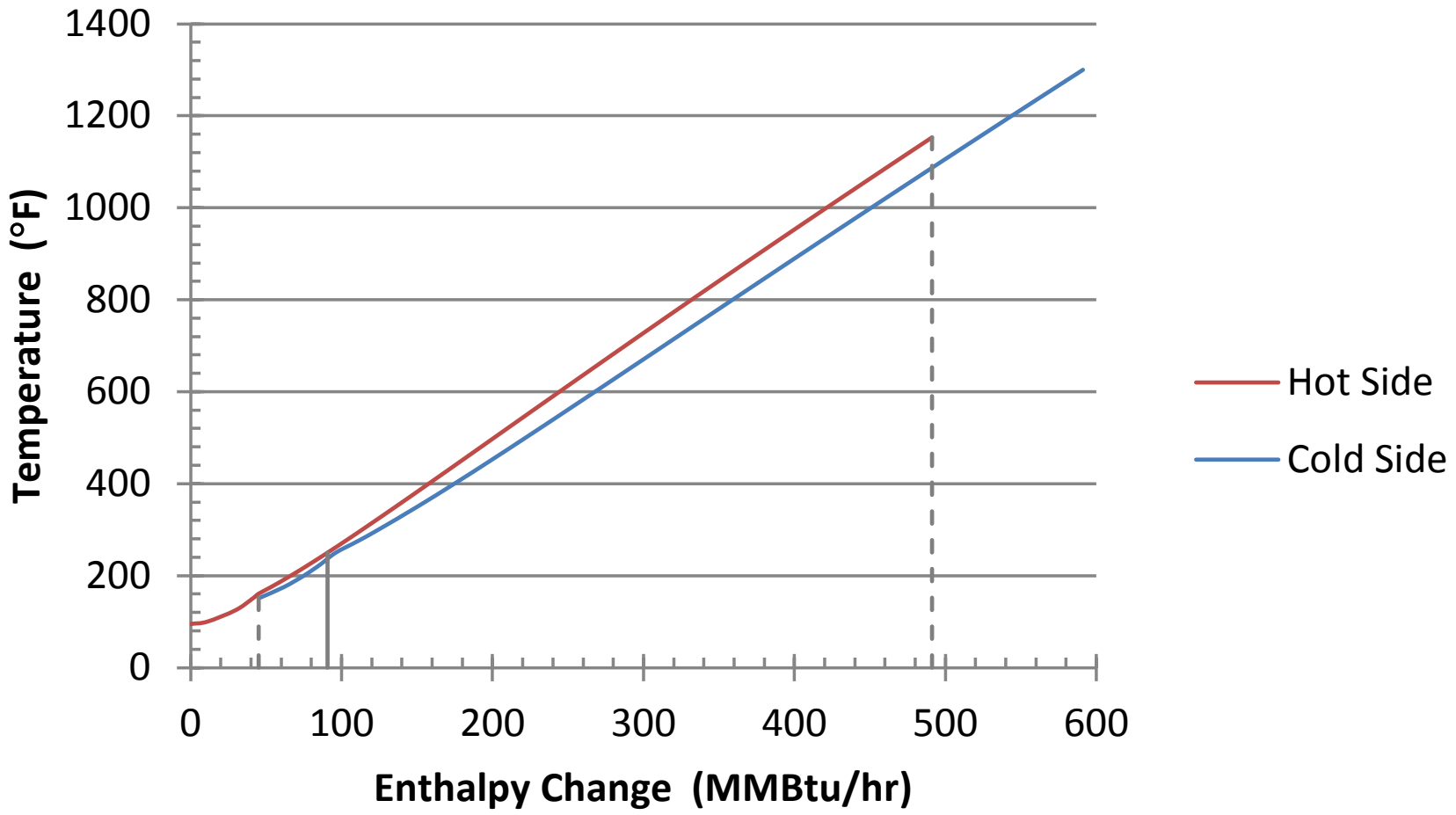

SCO_2 Cycle Basis
Assumptions

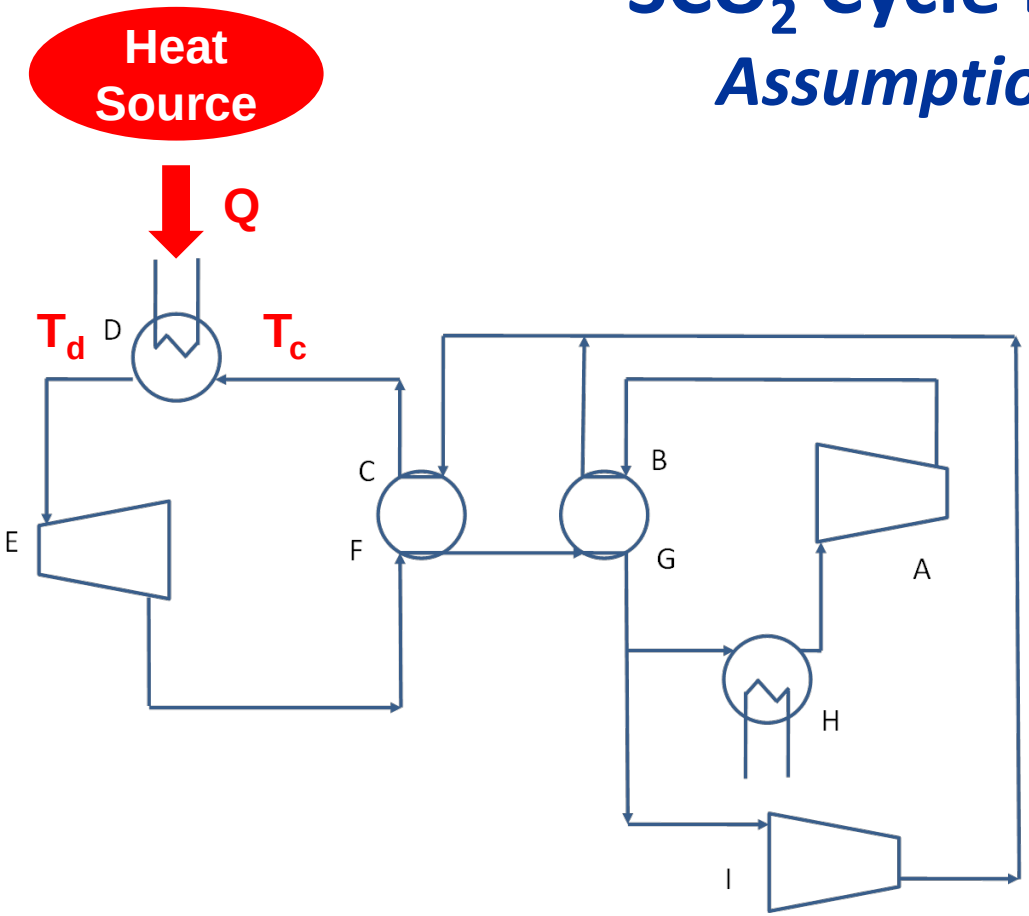

Source: NETL

- **Recompression SCO_2 cycle**
  - Indirect
  - 2-stage
- **Preliminary cycle conditions:**
  - TIT = 1300 °F
  - $\eta_{turbine\ -\ isentropic} = 0.927$
  - $\eta_{compressor\ -\ isentropic} = 0.85$
  - $P_{turbine\text{-}exit} = 1150$ psia
  - $P_{turbine\text{-}inlet} = 3000$ psia
  - Pressure Ratio ~ 2.60
  - $T_C = 95$ °F
  - $T_c = 1100$ °F
  - $T_d = 1300$ °F

Preliminary cycle for discussion only – a more optimum cycle can be used to refine results

Source: NETL

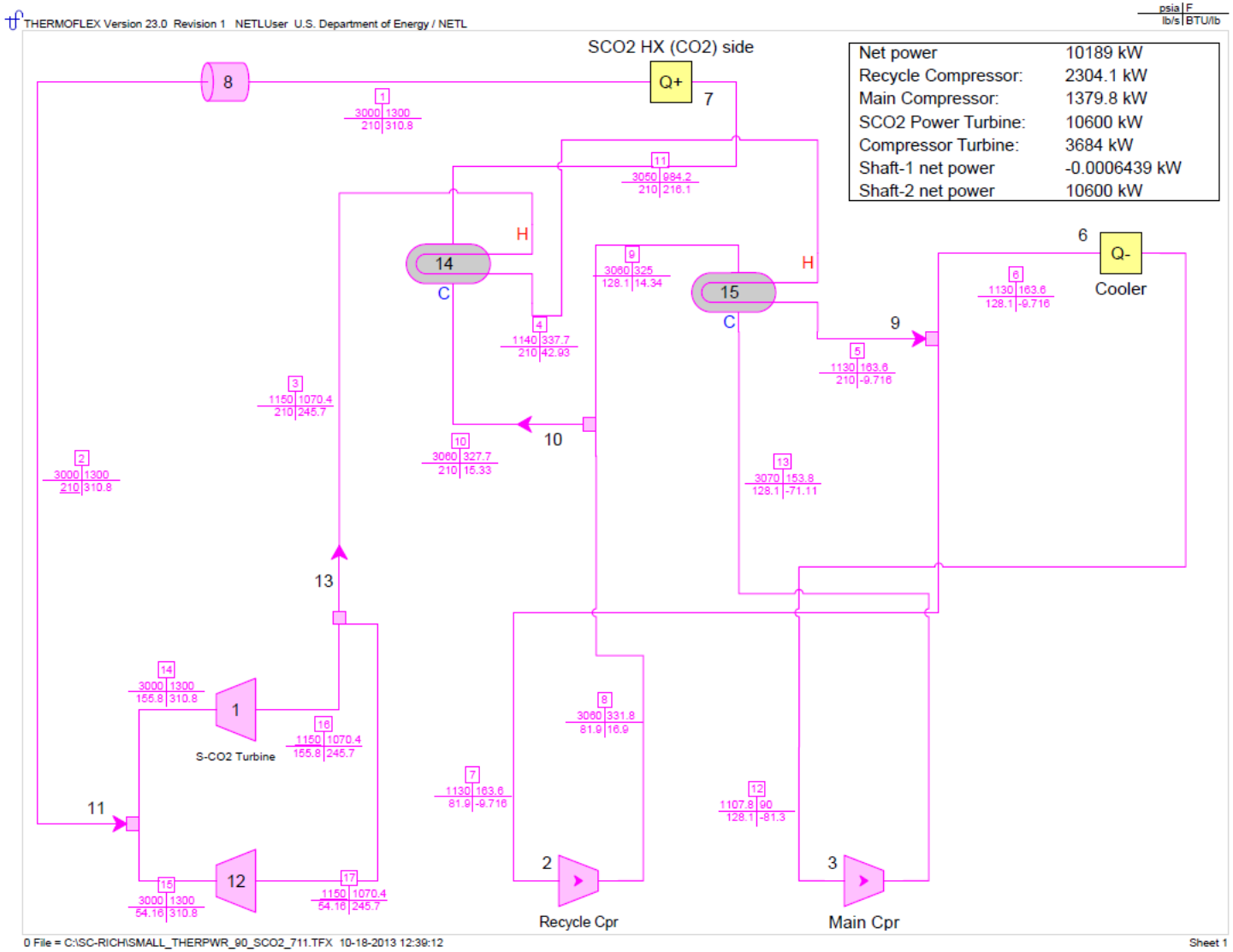
THERMOFLEX Version 23.0 Revision 1 NETLUser U.S. Department of Energy / NETL
psia | F
lb/s | BTU/lb
SCO2 HX (CO2) side
Net power 10189 kW
Recycle Compressor: 2304.1 kW
Main Compressor: 1379.8 kW
SCO2 Power Turbine: 10600 kW
Compressor Turbine: 3684 kW
Shaft-1 net power -0.0006439 kW
Shaft-2 net power 10600 kW
Q+
Q-
Cooler
S-CO2 Turbine
Recycle Cpr
Main Cpr
0 File = C:\SC-RICH\SMALL_THERPWR_90_SCO2_711.TFX 10-18-2013 12:39:12
Sheet 1

Cost-Efficiency Trade-off for Adv. Power Cycles

Objective and Approach

- **Objective:**
  - Evaluate impact of a hypothetical advanced power cycle integrated in a coal-fueled power plant

- **Approach:**
  - Select reference plant
  - Increase net plant efficiency with no corresponding change in cost for advanced components
    - Hold net output constant and vary coal input
    - Scale costs of reference plant to match new coal input
  - Include cost sensitivity to evaluate impact of cost of the advanced power cycle and coal combustor relative to reference plant combustor and power island
  - Evaluate impact of efficiency and cost changes on:
    - COE of coal plant with CCS
    - Natural gas price where COE of Adv. NGCC with CCS is equal to that of the coal plant with advanced power cycle

Scenario Market Conditions (AEO 2013 Ref.)

Fuel Prices (2011$/MMBtu)

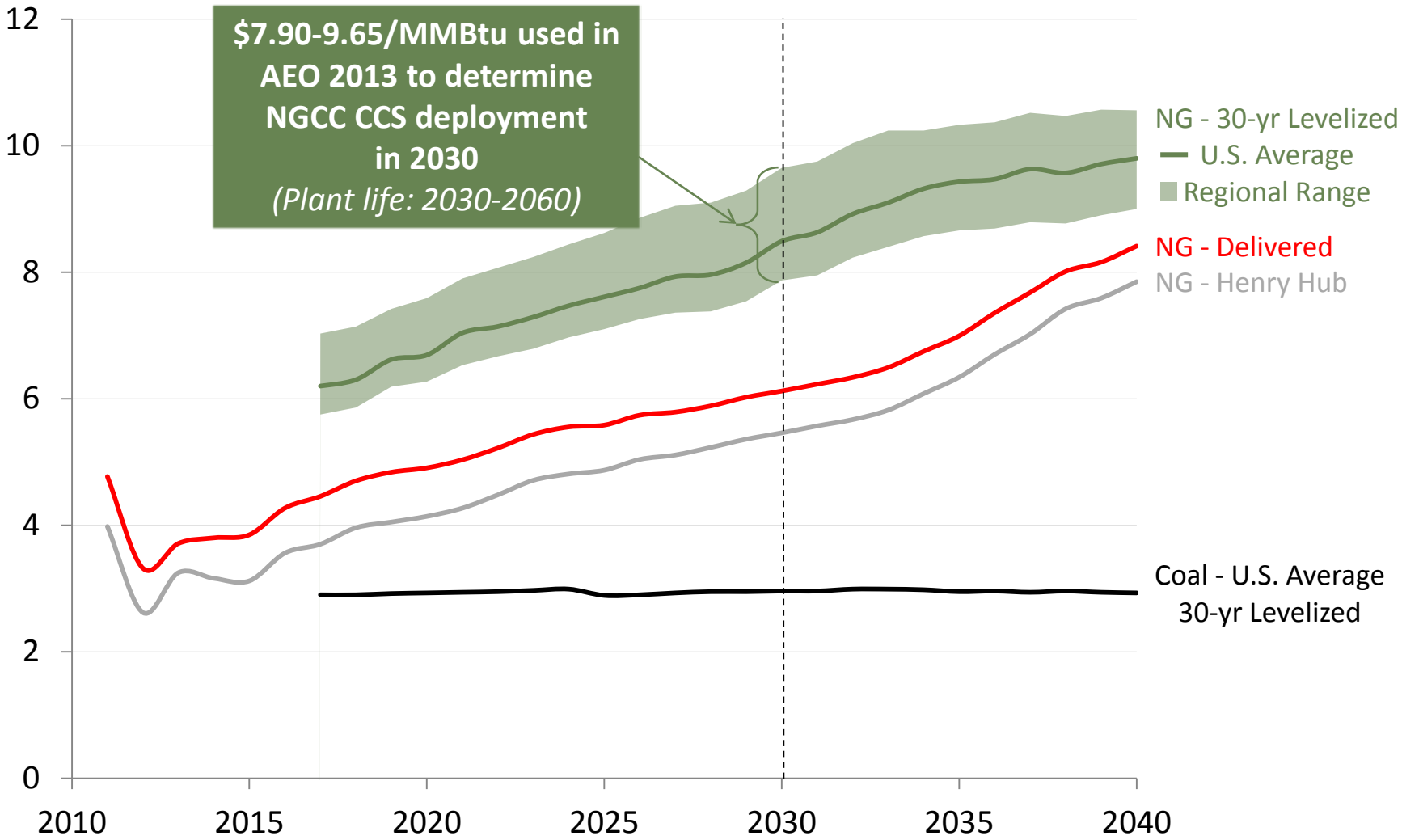

Cost-Efficiency Trade-off for Adv. Power Cycles

NG Price where $COE_{NGCC**} = COE_{2nd\ Gen\ Coal\ with\ Adv.\ Cycle}$

Reference: 2nd Gen Oxy-combustion *(advances in ASU, combustor, CO_2 recycle, and CO_2 compression)*

$40/tonne CO_2 Revenue

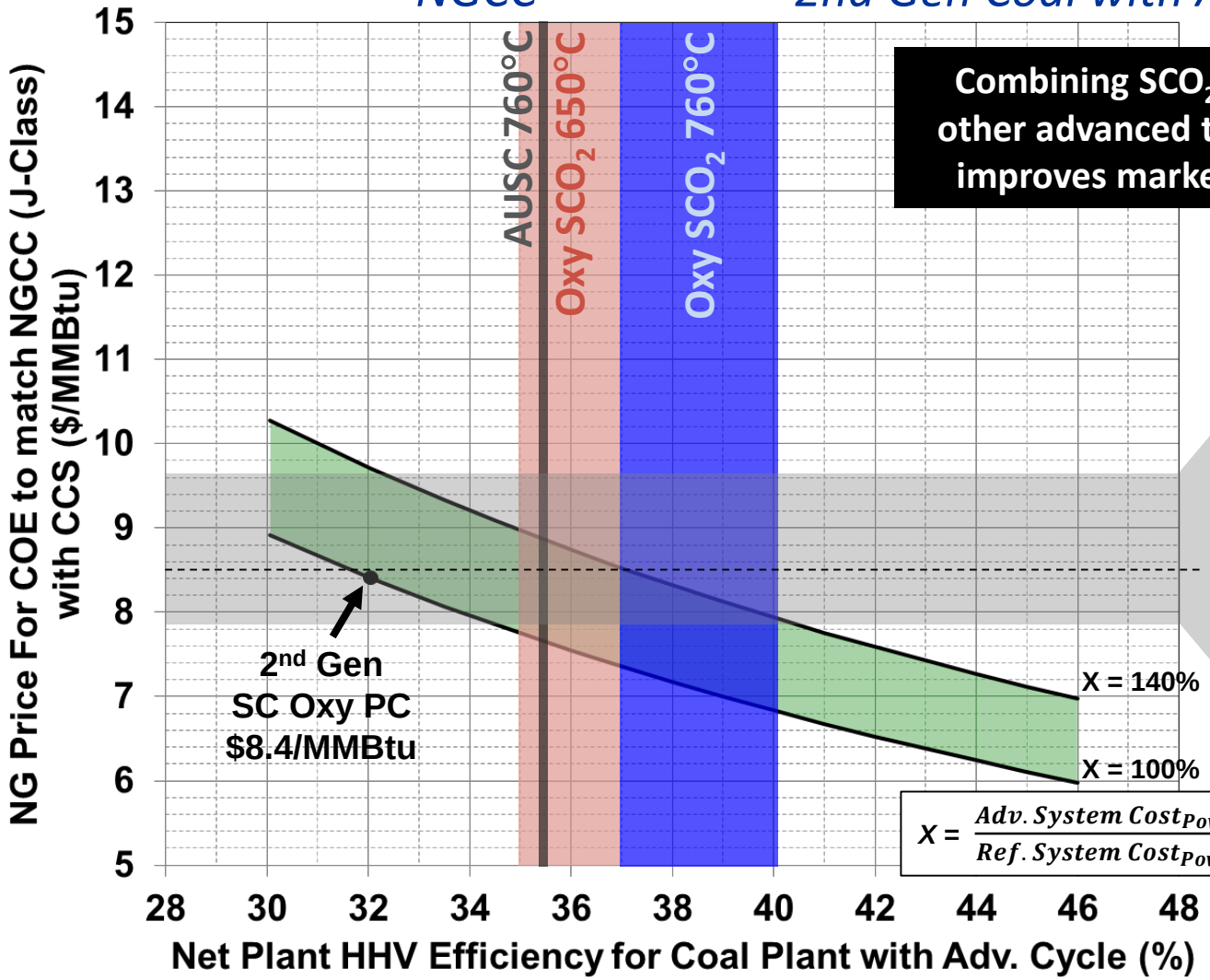

Combining SCO_2 cycle with other advanced technologies improves market potential

Projected 30-yr levelized NG prices for plants starting up in 2030*

$$X = \frac{Adv.\ System\ Cost_{Power\ Island+Combustor}}{Ref.\ System\ Cost_{Power\ Island+Combustor}}$$

Source: NETL

* AEO 2013 Reference case for plants with an economic life 2030-2060; dotted line represents U.S. average of $8.50/MMBtu; range of $7.90 - $9.65/MMBtu is for individual NEMS regions for the year 2030. **No additional advances included for NGCC with CCS

Cost-Efficiency Trade-off for Adv. Power Cycles

NG Price where $COE_{NGCC} = COE_{Coal\ with\ Adv.\ Cycle}$

Reference: SOA SC Oxy-combustion

CO_2 Revenue varying from $0/tonne CO_2 to $60/tonne CO_2

870 MW

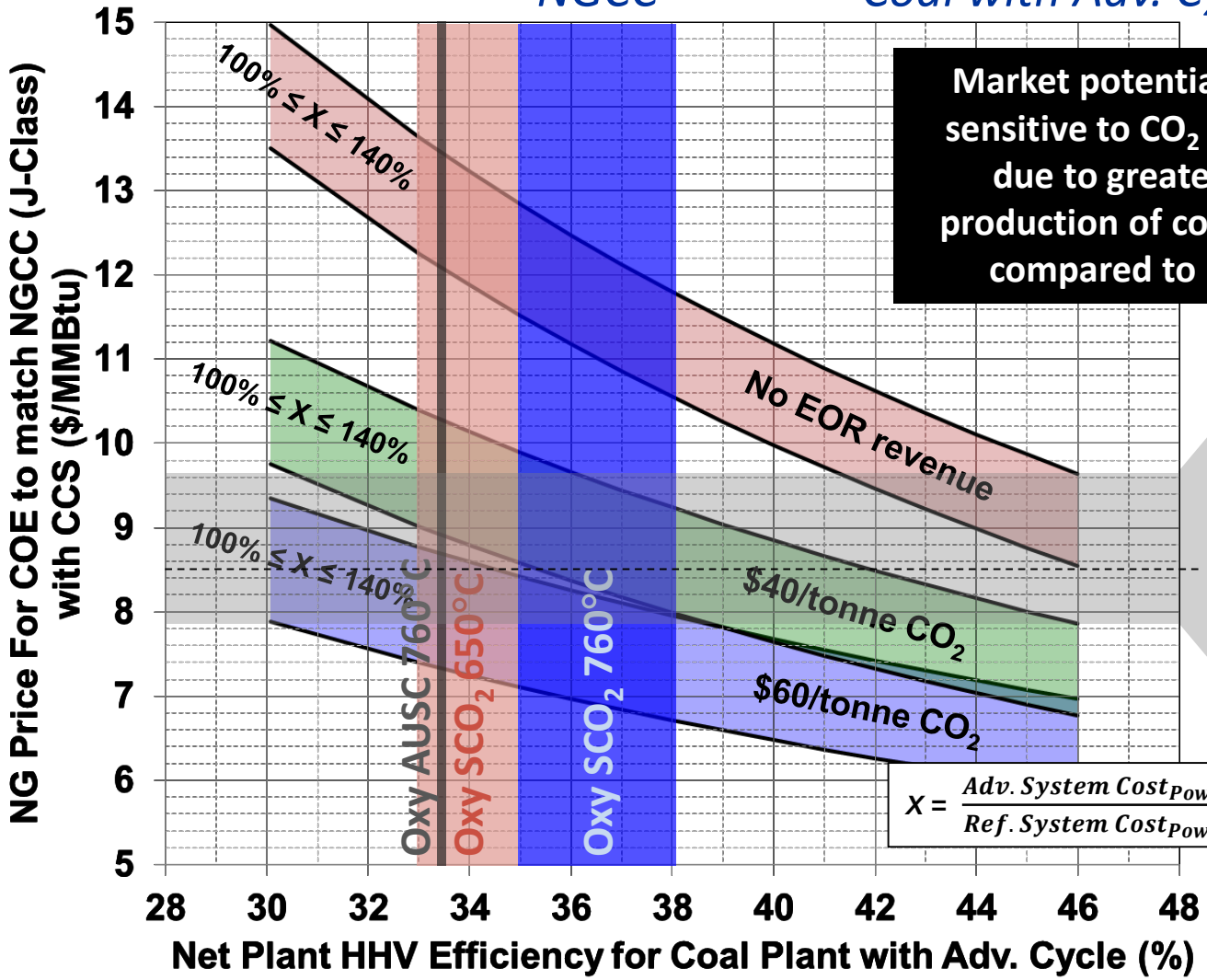

Market potential highly sensitive to CO_2 revenue due to greater CO_2 production of coal plants compared to NGCC

Projected 30-yr levelized NG prices for plants starting up in 2030*

$$X = \frac{Adv.\ System\ Cost_{Power\ Island+Combustor}}{Ref.\ System\ Cost_{Power\ Island+Combustor}}$$

Source: NETL

* AEO 2013 Reference case for plants with an economic life 2030-2060; dotted line represents U.S. average of $8.50/MMBtu; range of $7.90 - $9.65/MMBtu is for individual NEMS regions for the year 2030.

Example Applications – Indirect Cycles

Natural Gas Simple Cycle with SCO_2 Bottoming Cycle (waste heat recovery)

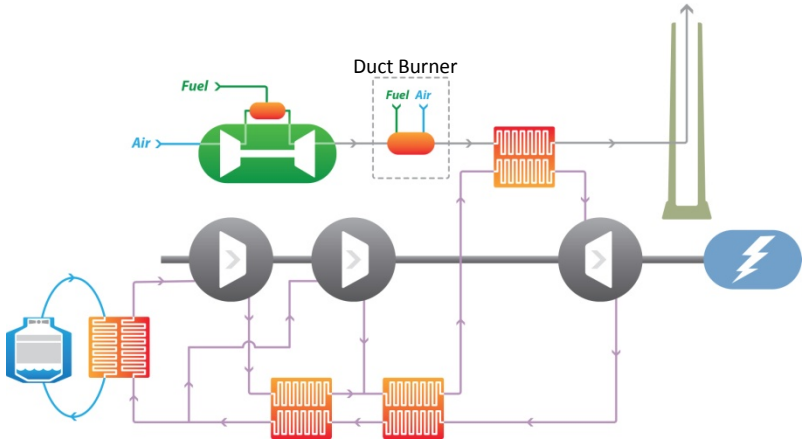

Oxy-Fuel Pressurized Combustor with SCO_2 Topping and Steam Bottoming Cycle

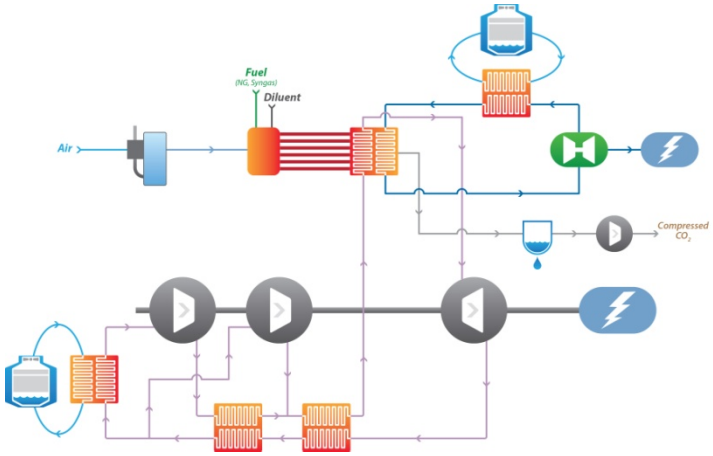

Oxy-Fuel PFBC with SCO_2 Topping Cycle and Steam Bottoming Cycle

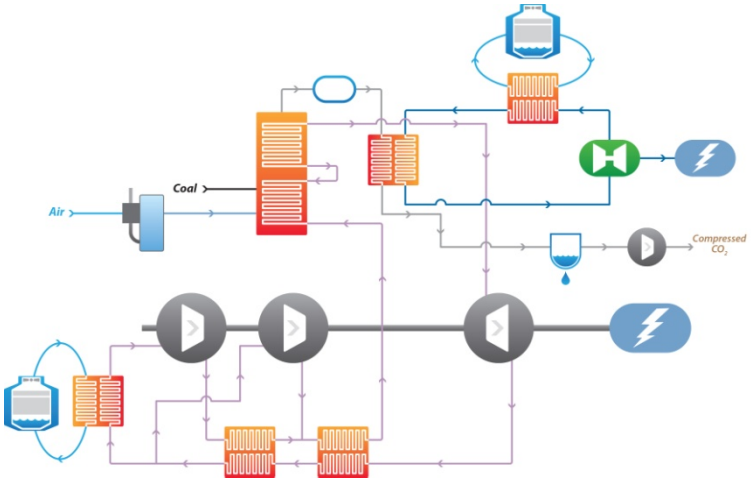

PC Boiler with SCO_2 Power Cycle or solid waste incinerator

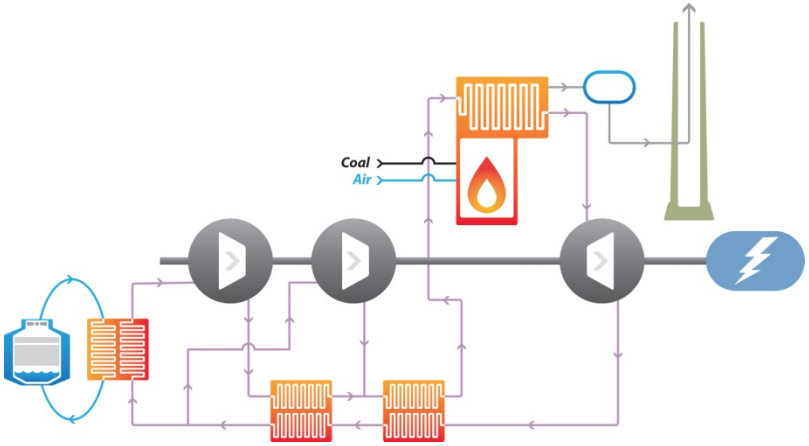

Oxy-Fuel Direct Fired SCO_2 Power Cycle

- **Commercial interest**
  - Net Power
  - Aerojet Rocketdyne
  - SwRI
- **Benefits to CCS**
- **Technical issues**
- **Bottom line: TIT needs to exceed 2,075 F to surpass NGCC w/post CCS on an efficiency basis**

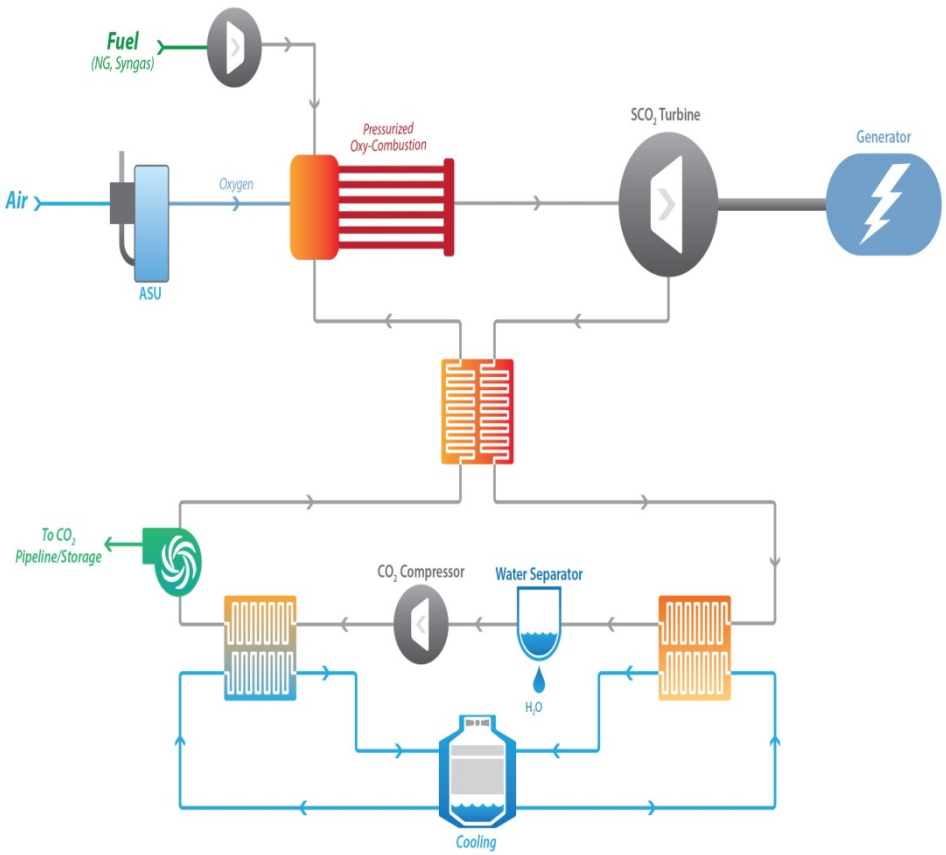

SCO_2 Power Cycle Overview

Potential Benefits for FE Applications

- **Pulverized coal boiler or waste incinerator**
  - EPRI report replaces AUSC steam cycle (5100 psi/1256 F/ 1292F) with SCO_2 RCB cycle (3000 psi/1300 F / PR~3) yields 3.3 % pts. higher thermal cycle efficiency
  - Coal-fired plant concept with SCO_2 Brayton power cycle (4350psi/1150F)
    - Net plant efficiency with 90% CO_2 capture: **41%**; without CO_2 capture: 50%
    - Levelized cost of electricity reduction: 15%
- **Oxy fuel pressurized fluidized bed combustion (OPFBC)**
  - Aerojet Rocketdyne compares OPFBC with steam Rankine (TIT 1110 F) with SCO2 RCB (TIT 1300 F) yields 4.9 % pts. improvement
- **Oxy-fuel boiler with SCO_2 topping steam bottoming cycles**
  - Compact power unit (SCO_2 RCB topping & steam bottoming)
  - Production of clean power, water and CO_2 for EOR
- **SCO_2 bottoming cycle for waste heat recovery**
  - Applications: SGT, WHR, Shipboard, offshore
  - High Power Density -> Low weight, small size
- **Direct SCO_2 power cycle**
  - CCS, water, EOR
  - Potential for higher efficiency