TESTING OF AN ADVANCED DRY COOLING TECHNOLOGY FOR POWER PLANTS IN ARID CLIMATES – STAGE 1

Interim Report

Submitted to:

Barbara Carney

National Energy Technology Laboratory
U.S. Department of Energy
3610 Collins Ferry Road
PO Box 880, MS P03C
Morgantown, WV 26507-0880

Cooperative Agreement: DE-FC26-08NT43291

Submitted by:

Christopher L. Martin
John H. Pavlish

Energy & Environmental Research Center
University of North Dakota
15 North 23rd Street, Stop 9018
Grand Forks, ND 58202-9018

May 2013

EERC DISCLAIMER

LEGAL NOTICE This research report was prepared by the Energy & Environmental Research Center (EERC), an agency of the University of North Dakota, as an account of work sponsored by the U.S. Department of Energy (DOE) National Energy Technology Laboratory (NETL) and the University of Wyoming. Because of the research nature of the work performed, neither the EERC nor any of its employees makes any warranty, express or implied, or assumes any legal liability or responsibility for the accuracy, completeness, or usefulness of any information, apparatus, product, or process disclosed or represents that its use would not infringe privately owned rights. Reference herein to any specific commercial product, process, or service by trade name, trademark, manufacturer, or otherwise does not necessarily constitute or imply its endorsement or recommendation by the EERC.

DISCLAIMER

This report was prepared as an account of work sponsored by an agency of the United States Government. Neither the United States Government, nor any agency thereof, nor any of their employees, makes any warranty, express or implied, or assumes any legal liability or responsibility for the accuracy, completeness, or usefulness of any information, apparatus, product, or process disclosed, or represents that its use would not infringe privately owned rights. Reference herein to any specific commercial product, process, or service by trade name, trademark, manufacturer, or otherwise does not necessarily constitute or imply its endorsement, recommendation, or favoring by the United States Government or any agency thereof. The views and opinions of authors expressed herein do not necessarily state or reflect those of the United States Government or any agency thereof.

ACKNOWLEDGMENT

This material is based upon work supported by DOE, NETL under Award Number DE-FC26-08NT43291.

TESTING OF AN ADVANCED DRY COOLING TECHNOLOGY FOR POWER PLANTS IN ARID CLIMATES – STAGE 1

ABSTRACT

This project will evaluate the feasibility of using the EERC's dry cooling technology to meet the cooling needs of power plants located in arid environments. The EERC's technology does not require cooling water, and it is estimated to have a lower ratio of cost versus performance compared to conventional dry cooling options such as an air-cooled condenser. The project has been divided into two stages of evaluation, Stages 1 and 2. This report covers the activities of Stage 1, which were to construct a test facility and prototype cooling system and conduct performance testing to determine if the concept warrants a detailed Stage 2 evaluation.

Overall, the findings from Stage 1 were positive. The process of heat dissipation to the ambient air was determined to be as efficient as assumed in the original economic analysis and the potential problem of working fluid aerosol emissions (i.e., drift) was found to be small and could effectively be eliminated with proper design and operation of the direct contact heat exchanger. On the steam condenser side of the process, the temperature differential between the condensing steam and the coolant were higher than expected; this issue has been traced to lower tube surface thermal conductivity values than estimated during the design phase. Efforts are ongoing to resolve this issue, and in addition, testing of an alternative condenser cooling configuration is planned for Stage 2.

Based on the conclusions drawn from the Stage 1 effort, it appears that the technology still has significant potential as a dry cooling alternative for power plants. Therefore, it is recommended that the concept should advance to the Stage 2 evaluation, which consists of an expanded set of experimental tests, testing of a water-cooled condenser, and an in-depth revision of the economic comparison between this technology and conventional dry cooling options.

TABLE OF CONTENTS

LIST OF FIGURES ii

LIST OF TABLES ii

INTRODUCTION 1

TECHNOLOGY BACKGROUND 3

OBJECTIVES 4

EXPERIMENTAL SYSTEMS 5
- Test Facility 5
- Prototype Cooling System 9

RESULTS AND DISCUSSION 9
- Air Exchanger Design and Performance 10
- Working Fluid-to-Air Heat Transfer 12
- Steam Condenser Performance 13

CONCLUSIONS AND RECOMMENDATIONS 14

REFERENCES 15

LIST OF FIGURES

1 Power plant integration of the EERC dry cooling technology 2

2 Sample case study simulation results: Steam condensation temperatures for various cooling technologies 4

3 Resulting performance-versus-cost summary for the case study examined during the initial investigation of the EERC dry cooling concept 5

4 Process diagram for the dry cooling test facility 6

5 Exterior (left) and interior (right) views of the cooling system test facility 6

6 Photograph of the steam generator with the prototype steam condenser installed 8

7 Photograph of the completed dry cooling test facility during a drift-sampling measurement 8

8 Schematic of the drift measurement apparatus 11

9 Photograph of drift-sampling equipment 11

10 Experimentally measured sensible heat-transfer data for the air exchanger 13

LIST OF TABLES

1 Summary of Parameters for Steam Bottoming Cycle Case Study 3

2 Summary of Drift Sampling at the Air Exchanger Outlet (SP10) 12

3 Summary of Condenser Heat-Transfer Data at Constant 10-kW Thermal Load 14

TESTING OF AN ADVANCED DRY COOLING TECHNOLOGY FOR POWER PLANTS IN ARID CLIMATES – STAGE 1

INTRODUCTION

Water is essential for coal-based power generation. Water is the working fluid for the Rankine cycle, which is used to extract power from coal combustion, and water is used significantly as a conduit for numerous plant operations such as environmental control and transport processes. However, by far, the largest and most critical water use at power plants has been to provide cooling. For new water-cooled coal power plants, cooling water represents 85%–90% of the plant's consumptive water use (1). Water-based cooling is typically the most efficient and cost-effective solution where water is available. However, in Wyoming, unfettered access to water is usually not an option. This is a significant obstacle to power generation in a place that otherwise has strong energy development potential. Wyoming is home to vast deposits of good-quality, low-sulfur, subbituminous coal, primarily in the Powder River and Green River Basins, and it has grid access to the large demand centers of the western United States.

The prospect of water availability in Wyoming is clear; while other states are moving to ban once-through cooling in favor of wet recirculating systems, plants in Wyoming have been and continue to be constructed with dry cooling. In fact, the Neil Simpson 1 plant near Gillette was the first air-cooled condenser (ACC) installation for a power plant in the United States. This facility was followed by the Wyodak plant that, at the time of construction, was the largest application of an ACC in the world. The trend continues to this day with the election to use dry cooling at the Dry Fork station that has recently been constructed.

Based on the successful operating history of these plants, the lack of sufficient water for cooling can obviously be overcome with the application of dry cooling. The key disadvantage of dry cooling is a lower return on investment; ACCs are 3–4 times more expensive to construct than wet recirculating cooling systems, and the performance of an ACC degrades rapidly with hot weather—often limiting plant output during times of peak demand. The cost and performance gap associated with conventional dry cooling is a costly disadvantage for new power plant construction in Wyoming.

In response to these trends, the Energy & Environmental Research Center (EERC) is developing a novel dry cooling technology to meet the cooling needs of power plants located in arid environments such as the coal-producing regions of Wyoming. The unique aspect of the EERC's dry cooling technology is its use of a hygroscopic working fluid as a heat-transfer medium. A simplified process diagram of the cooling system integrated with a Rankine-based power cycle is shown in Figure 1. In the system, the circulating working fluid accepts thermal energy from condensing steam in the condenser, and this thermal energy is ultimately transferred to a flow of ambient air in an air-cooled heat exchanger. Heat rejection in the air heat exchanger is achieved through direct contact of the cooling fluid and the air, somewhat like the contact in

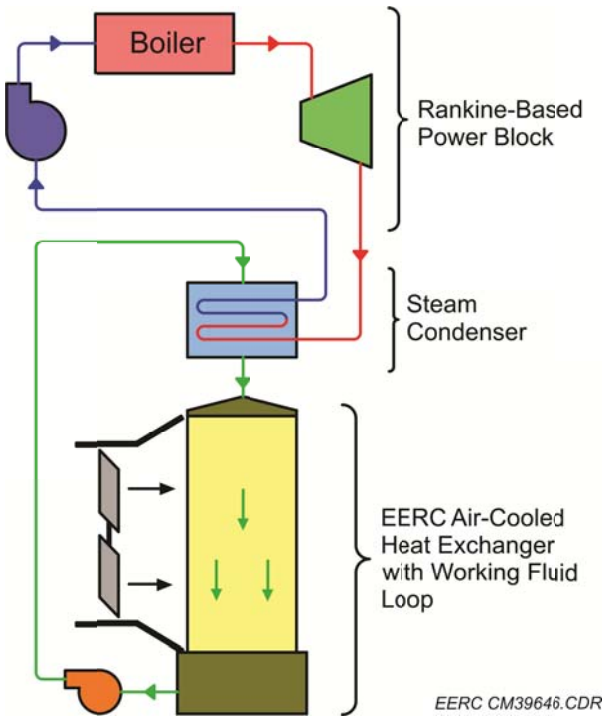

Figure 1. Power plant integration of the EERC dry cooling technology.

a conventional wet recirculating cooling system. However, unlike wet evaporative cooling with water, the hygroscopic fluid is stable under contact with the atmosphere (i.e., it will remain as a liquid) and can be recycled continuously without requiring makeup fluid. In the EERC system, heat transfer to the atmosphere is primarily sensible; however, the process is augmented by transient absorption and desorption of moisture.

The unique design of the EERC dry cooling system enables several features that are beneficial for power plant-scale thermal energy dissipation to the atmosphere. They are as follows:

- Direct contact of the working fluid and air allows for large heat-transfer surfaces to be created from inexpensive, wetted packing structures.

- Combined heat and mass transfer occur between the working fluid and the air, which improves heat-transfer efficiency. This makes it feasible to construct a heat rejection system with low-ambient approach temperatures and potentially lower air-side pressure drop.

- Daily fluctuations in ambient temperature cause cyclic absorption and desorption of moisture in the working fluid. The resulting cyclic periods of evaporation act as integrated thermal storage, which dampens daytime performance degradation that hinders conventional dry cooling systems.

- It is a zero-liquid-discharge process, and no blowdown is required. The initial charge of working fluid is expected to last for the life of the system.

This project will evaluate the feasibility of using the EERC's dry cooling technology to meet the cooling needs of power plants located in arid environments. In order to determine the market potential for this technology, the project has been divided into two stages of evaluation, Stages 1 and 2. This report covers the activities of Stage 1, which were to construct a test facility and prototype cooling system and conduct performance testing to determine if the concept warrants a detailed Stage 2 evaluation.

TECHNOLOGY BACKGROUND

Exploratory research funding from the U.S. Department of Energy has been used to show that the concept is fundamentally sound, and that it appears to have benefits for the utility market. In that exploratory investigation, a detailed case study was performed to evaluate the potential advantage of the EERC's dry cooling technology over conventional cooling systems. The study was modeled closely after the primary case study presented in an Electric Power Research Institute (EPRI) review of cooling technologies (2), which evaluated cooling options for the steam bottoming cycle of a natural gas combined-cycle plant. Key parameters for the case study are summarized in Table 1. Comparisons were made between the EERC dry cooling system, an ACC, and a wet recirculating system.

Cost and performance estimates for the EERC dry cooling system were computed based on the scaled performance of a laboratory-scale experimental system that was tested under the exploratory project. Corresponding models for the cost and performance of wet recirculating cooling and an ACC were derived from information in the EPRI review (2). Since the performance of the EERC dry cooling system is dependent on ambient temperature and humidity conditions, as well as the sequencing of these conditions, real recorded weather data for Omaha, Nebraska (2008), were used in a simulation to establish the performance capabilities of the three cooling systems.

A sample of the input weather data (ambient and dew point temperatures) along with the simulation results are presented in Figure 2. The simulation results are presented in terms of the steam condensation temperature calculated for each cooling technology. Baseline cooling performance was provided by the wet recirculating system. The EERC cooling system was sized to provide equivalent power production performance to the wet system, as was one of the

Table 1. Summary of Parameters for Steam Bottoming Cycle Case Study

Application	170-MW_e steam bottoming cycle
System Thermal Load	316 MW
Location	Omaha, Nebraska
Capacity Factor	100% during simulated time frame
Heat Rate Penalty	Derived from heat rate versus turbine back-pressure data (2)
Lost Production Cost	$100/MWh

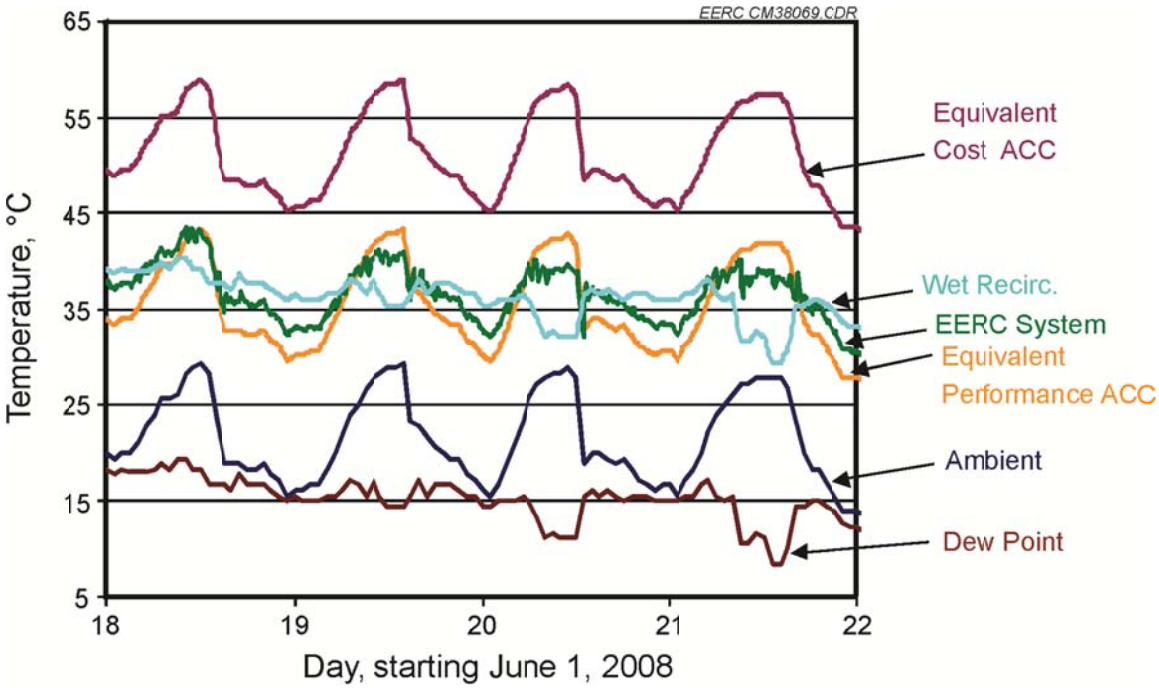

Figure 2. Sample case study simulation results: Steam condensation temperatures for various cooling technologies. Weather data for Omaha, Nebraska.

ACC scenarios, i.e., the equivalent performance ACC. The equivalent cost ACC results are the estimated steam condensation temperatures for an ACC sized to have the same estimated capital cost as the EERC system.

The resulting tradeoff between the annual lost power production penalty and the cooling system capital costs is shown in Figure 3 for the three systems of interest. The wet recirculating system is represented by a single point, since it is economically feasible to size a wet system without a compromise to plant output. The wet system has clear performance and capital cost advantages compared to the other two options, and in areas where water is available, this cooling system will typically be the best design choice for large-scale heat dissipation. However, in areas like northeastern Wyoming, without sufficient water, the choice would be restricted to the EERC dry cooling system and an ACC. As for this comparison, Figure 3 shows that the EERC system is estimated to have a significant cost and performance advantage over the conventional ACC.

OBJECTIVES

Based on the promising results from the exploratory project, the overall objectives for this project include the following:

- Demonstrate the advantages of the EERC cooling concept using an experimental system that includes steam condensation and ambient air heat dissipation processes.

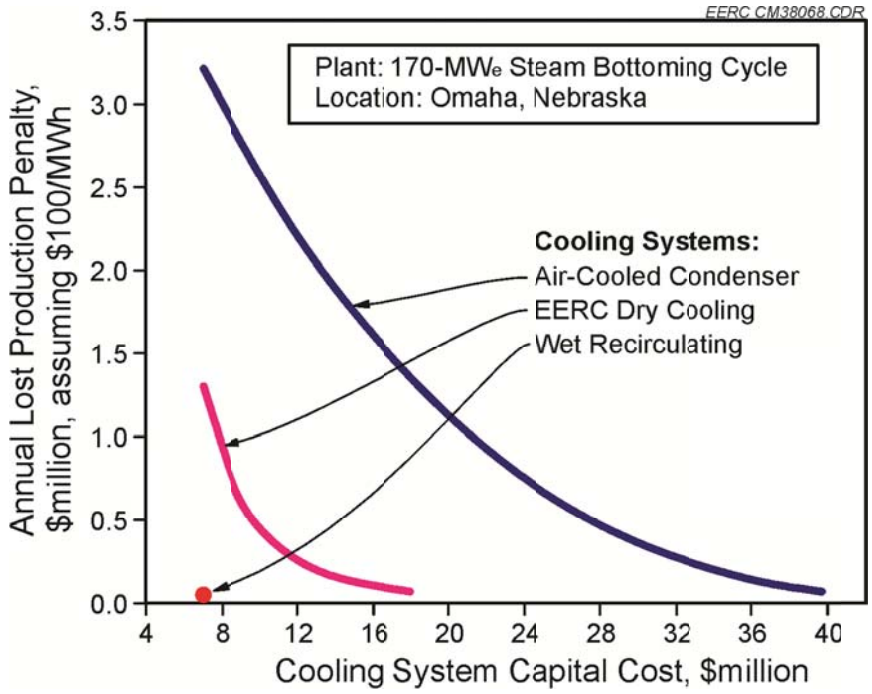

Figure 3. Resulting performance-versus-cost summary for the case study examined during the initial investigation of the EERC dry cooling concept.

- Verify that the technology operates in an environmentally acceptable manner.
- Determine the market viability for the cooling technology.

In order to meet the stated objectives, the project is divided into two stages of evaluation, Stages 1 and 2. This report covers the activities of Stage 1, in which the objectives were to construct a test facility and prototype cooling system and conduct performance testing to determine if the concept warrants a detailed Stage 2 performance and economic evaluation.

EXPERIMENTAL SYSTEMS

Test Facility

In order to generate reliable and consistent test conditions, it was decided to construct a test facility that would produce simulated environmental conditions of interest. The test facility consists of two subsystems: one to generate a temperature- and humidity-controlled air stream for testing the air-cooled heat exchanger and the other to produce low-pressure steam to mimic a turbine exhaust thermal load.

A process diagram for the test facility is shown in Figure 4. In the system, air temperature regulation is divided into two stages: air is first drawn through a gas-fired preheater and is then

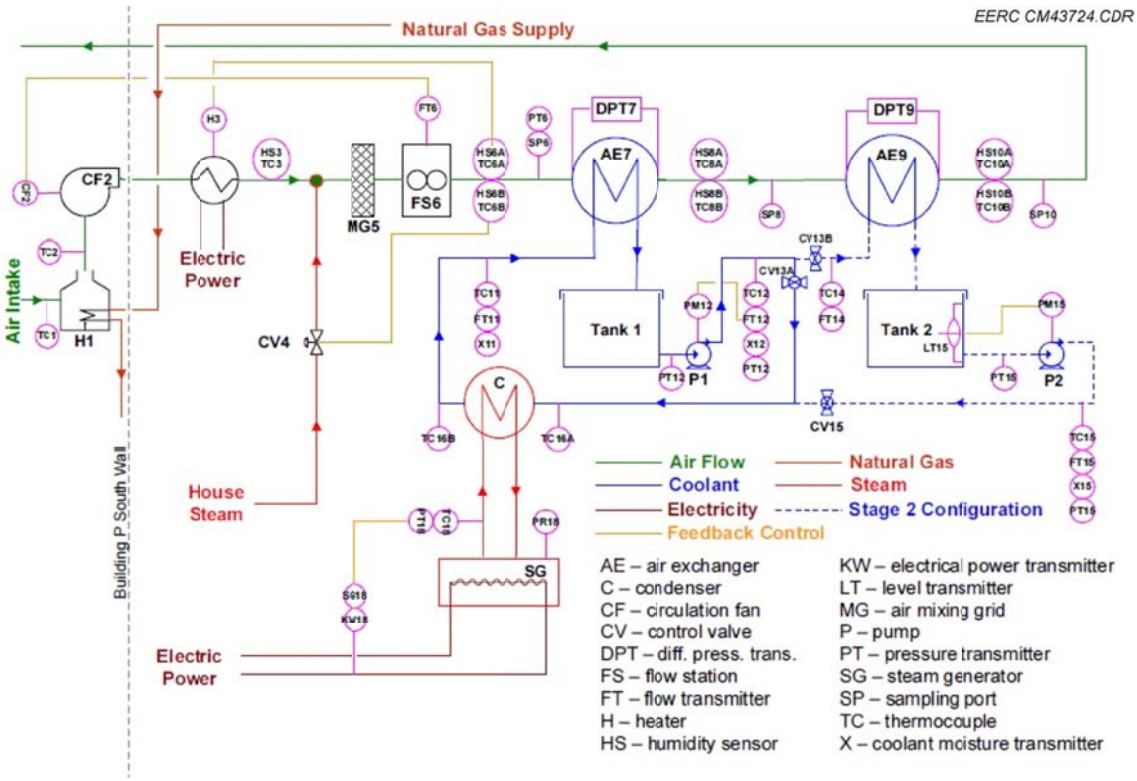

Figure 4. Process diagram for the dry cooling test facility.

blown across a bank of resistance heating elements for trim temperature control. Following the trim heater, steam is injected to maintain the desired humidity set point. An expanded metal grid is located further downstream to induce turbulence in the air flow and promote thorough mixing. After passing through the air exchanger test sections, the flow is turned 180° and exhausted back outdoors. Figure 5 contains photos of the system during construction that show the outdoor air preheating system and the air circulation ductwork.

Figure 5. Exterior (left) and interior (right) views of the cooling system test facility.

The system's cross-sectional flow path is square in shape and 0.76 m to a side. Volume flow rate is monitored by an averaging differential pressure flow station with an integral flow straightener section, FS6. As shown in Figure 4, flow, temperature, and humidity data collected at Station 6 are used to provide feedback to the circulation fan, trim heater, and steam valve, respectively. At the inlet and outlet of the air exchanger test sections, dual measurements of temperature and humidity are made on opposite sides and at different elevations within the duct and averaged in order to minimize effects of stratification.

The heat load used to challenge the cooling technology is generated by an electrically heated steam boiler that is maintained under vacuum to simulate power plant turbine exhaust (SG in Figure 4). A photograph of this system is provided in Figure 6; the vertical riser leaving the steam generator conducts steam flow to the condensing heat exchanger. Circulation of the steam is maintained by natural convection as condensation creates a low-pressure region in the condenser. Condensate then flows back by gravity into the boiler.

The coolant circuit is designed to circulate working fluid from the collection tanks to the fluid-cooled steam condenser and back to either air exchanger for ultimate heat dissipation to the air stream. Two air exchanger test sections were included in the test facility in order to accommodate advanced test configurations during Stage 2, but only Air Exchanger 7 was used during Stage 1 as indicated by the solid versus dashed coolant lines in Figure 4.

The most appropriate working fluids for use in the EERC's dry cooling technology are necessarily hygroscopic, but they are also generally corrosive to common engineering materials and pose a concern for operating personnel safety. It is believed that a safe cooling system can be engineered, but additional safety precautions are needed compared to conventional wet or dry cooling systems. To satisfy safety needs during testing, curtains were installed around the test system to contain unexpected splashes and keep all but authorized operators out of the equipment zone. This is highlighted in the completed system photograph in Figure 7. System operators were required to wear the appropriate personal protective equipment consisting of protective overalls, gloves, eye protection, and a hard hat with face shield when working behind this curtain.

In addition to the physical components of the system, a LabView-based control and data acquisition system was customized for the test facility and implemented on a PC laptop. This control system processes the feedback loops that maintain the airflow conditioning set points, liquid flow set point, and heat load input. A necessary feature of the control system is the ability to either set static or dynamic airflow conditioning set points. As the name implies, static set points maintain constant air temperature and relative humidity values at the air exchanger inlet. In dynamic mode, the temperature and humidity set points are continually updated in order to mimic the diurnal weather cycle of ambient air.

The control system also displays and records data from the system's transducers, and it calculates a number of mass and energy balance parameters instantaneously to aid interpretation of the system's performance during operation. Additionally, a number of automatic alarms and emergency shutdown routines have been incorporated in the control system in case of unexpected events.

Figure 6. Photograph of the steam generator with the prototype steam condenser installed.

Figure 7. Photograph of the completed dry cooling test facility during a drift-sampling measurement.

During start-up of the test facility, a variety of verification measurements were used to corroborate the system's instrumentation and data-processing calculations. Measurements of primary system parameters were verified by parallel readings using an independent set of instrumentation. For instance, air station measurements were confirmed by measuring a cross-sectional grid pattern with an insertion anemometer; liquid flowmeters were verified by measuring the displaced volume in the air exchanger basins; and the electric power readings were substantiated with multimeter measurements of amperage and current.

Derived mass and energy balance parameters were checked by computing the average change measured during static test conditions. For example, the instantaneous calculations of moisture exchange between the working fluid and the air were verified by collecting working fluid samples over time and determining the average change in working fluid moisture content.

Prototype Cooling System

A scaled heat dissipation system based on the EERC dry cooling concept was fabricated for evaluation. The system comprises the entire working fluid circuit outlined in Figure 1 and was implemented according to the process diagram of Figure 4. It includes a working fluid-cooled steam condenser, air-cooled heat exchanger, storage reservoir, and circulation pump. All component materials of the system were selected to be compatible with the working fluid under the expected operating temperatures, and where possible, standard commercially available components were used to demonstrate compatibility with the dry cooling concept.

Components made specifically for this evaluation include the air exchanger and the working fluid-cooled steam condenser. The air exchanger is composed of a structured packing that is specifically designed to wet and form a uniform film of the specific working fluid under evaluation. It also contains a liquid distribution manifold that evenly delivers working fluid to the entire section of packing.

The steam condenser is a shell and tube heat exchanger constructed out of corrosion-resistant materials on the shell side, which is the working fluid side of the heat exchanger. The steam circuit is inside of the tubes, which are constructed from carbon steel. This flow configuration is the reverse orientation of a conventional power plant steam condenser where steam typically condenses on the shell side, but the configuration was necessary to test the use of a thin film over the tubes to protect them from corrosion while minimizing the impact to heat-transfer efficiency. The condenser was oriented vertically, as shown in Figure 6, to allow the condensate to drain out of the condenser and back into the steam generator.

RESULTS AND DISCUSSION

This section presents the available data and general observations from Stage 1 testing and the perceived impacts on the dry cooling technology. Detailed analysis of the collected data will continue through the end of the Stage 1 project.

Testing was divided into one of three general phases: component optimization, static condition tests, and dynamic response tests. Each test series was used to extract specific performance information about the cooling technology, including the following key items:

- Air exchanger design and performance
- Heat transfer rates between the working fluid and the airflow
- Performance of the working fluid-cooled steam condenser

Air Exchanger Design and Performance

Design of the air exchanger packing was iterated during the component optimization tests by varying materials of construction and its structural design. The packing's function is to provide a substrate for the formation of a uniform film of the working fluid while exposing it to the cross-flow of air. Key design parameters for the packing are that it must wet readily and uniformly, be resistant to the corrosive nature of the candidate working fluids, and be structurally strong when placed in the airflow at operating temperature. The original economic evaluation for the dry cooling technology assumed metrics of packing cost and heat-transfer capacity per unit volume of packing material. Therefore, targets have been established with which to compare the performance of the prototype packing design.

Another necessary feature of the air exchanger is the prevention of working fluid drift or the carryover of fine aerosols of working fluid out of the air exchanger. Carryover and emission of working fluid in the exhaust air stream could lead to localized equipment corrosion and would possibly pose safety concerns. Furthermore, carryover of working fluid would create a situation comparable to the drift that leaves conventional wet cooling towers and would contribute to a plant's particulate air emissions.

Drift sampling was conducted downstream of the air exchanger test section, SP10 in Figure 4. An extractive sampling technique based on U.S. Environmental Protection Agency sampling methodology for stack and plume emissions was used to sample for water-soluble species of the specific working fluid used during testing. A diagram of the sampling setup is shown in Figure 8 with a photograph of the equipment in Figure 9. As indicated in the schematic, the nozzle was inserted through the test facility duct wall and used to isokinetically extract a sample of the exhaust airflow. The gas sample passed through a particulate filter (heated to prevent moisture condensation), through an umbilical tube, and into an impinger train to absorb any gas-phase vapors. The vapor collection train was probably not necessary since the thermodynamic properties of the working fluid suggest that it is very unlikely that the fluid would exist as a vapor. Instead, it is much more likely that if the working fluid were present, it would exist as fine aerosols that would be captured on the particulate filter.

Recovery of the sample consisted of emptying the impinger solutions into a collection flask and rinsing the nozzle, umbilical tube, filter holder, and all connecting glassware into the same flask. The particulate filter itself was then submerged in the same rinse liquid where any water-soluble aerosols would enter the liquid phase. The resulting solution was then sampled and analyzed for the working fluid's characteristic chemical species using ion chromatography

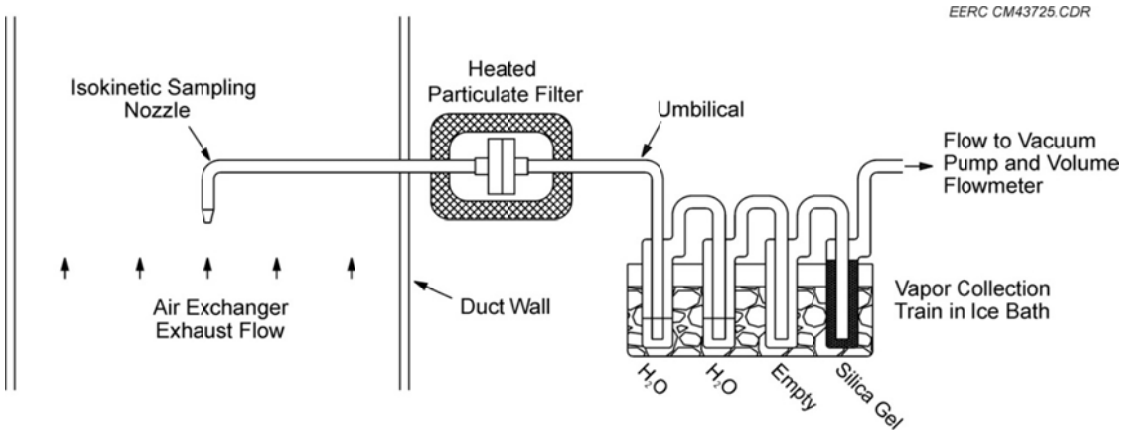

Figure 8. Schematic of the drift measurement apparatus.

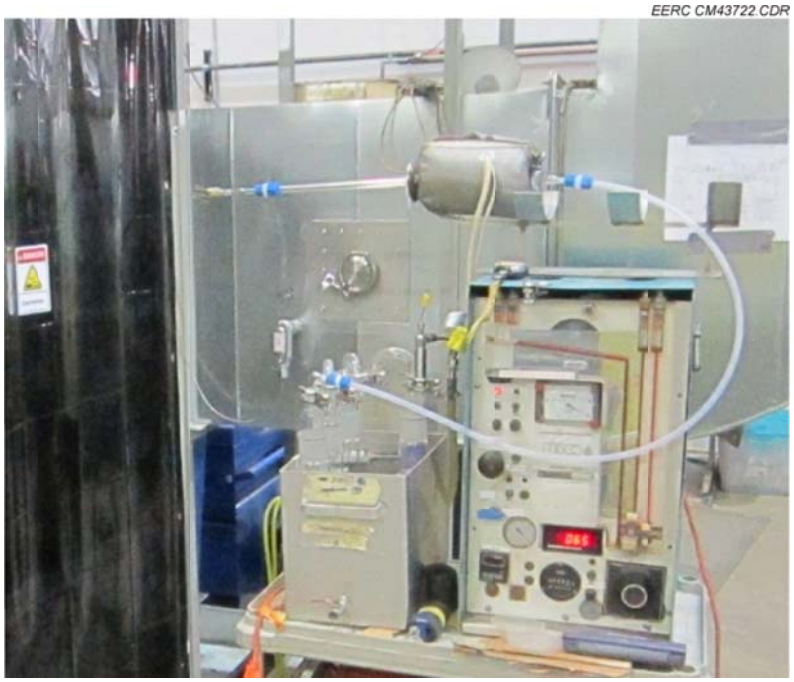

Figure 9. Photograph of drift-sampling equipment.

Drift samples were conducted periodically under a variety of experimental conditions, and these results are summarized in Table 2. Many of the samples fell below their respective detection limit as indicated by the “less than” values in the table. The detection limit varied as a function of the sample run time and the volume of sample gas that was collected. Later sampling was extended to a 2-hour collection time in order to achieve a 0.1 ppmv detection limit. There were two instances where components of the working fluid were detected by the drift measurement. In both cases, there were corresponding notes about visible foam in the air exchanger basin. It is believed that these events are correlated since as the foam bubbles burst, they provide an opportunity for aerosols to be released to the air stream. This is qualitatively

demonstrated by correlating minimal or no foam conditions to nondetectable readings of working fluid. Foaming of the working fluid has since been investigated and the underlying cause has been identified. Modifications to avoid foaming conditions will be made for future testing of the dry cooling system along with additional verification drift measurements.

Working Fluid-to-Air Heat Transfer

In the air exchanger, both sensible and latent heat transfer takes place between the working fluid and the air stream. Sensible heat transfer is driven by temperature gradients, while latent heat transfer (the evaporation or condensation of moisture) is driven by vapor pressure gradients. Given the relatively large amount of energy associated with the moisture-phase change, latent heat-transfer rates can be large if a suitable vapor pressure gradient exists, e.g., as in a conventional wet cooling tower. However, sensible heat transfer is the constraining mode of heat release to the atmosphere in the EERC technology and is used as the metric for evaluating air exchanger heat-transfer performance.

Selected static condition data are plotted in Figure 10 and were used to estimate the overall average heat-transfer coefficient for the air exchanger. The graph is a plot of sensible heat transfer as a function of the air inlet to working fluid outlet temperature gradient, which are related according to the governing equation:

$$Q_{AE} = hA_{AE}(T_{air\ in} - T_{fluid\ out}) \qquad \text{[Eq. 1]}$$

where Q_{AE} is the heat-transfer rate per unit volume of air exchanger packing, h is the average heat-transfer coefficient, and A_{AE} is the heat-transfer surface area per unit volume. Based on prior experience with a laboratory-scale air exchanger and the calculated performance of the cross-flow configuration, the most appropriate temperature gradient for sensible heat-transfer analysis was determined to be between the inlet air temperature and the outlet fluid temperature.

The slope of the data in Figure 10 represents the product hA in Equation 1. For the prototype packing, A has a value of 70 m^2/m^3 which results in an average heat-transfer coefficient value of 86.5 $W/m^2/K$. This is in good agreement with the calculated value of 89.5 $W/m^2/K$ based on turbulent flow convection correlations for the given packing geometry and appropriate surface roughness estimation for the liquid film.

Table 2. Summary of Drift Sampling at the Air Exchanger Outlet (SP10)

Sample	Working Fluid Drift Reading, ppmv	Notes
1	< 0.10	Blank, no working fluid in system
2	< 0.26	No foaming noted
3	< 0.54	No foaming noted
4	0.61	Foaming noted
5	< 0.10	Foaming minimized
6	0.19	Foaming noted

Steam Condenser Performance

As mentioned previously, the process flows in the steam condenser were reversed compared to the operation of most conventional power plant condensers, i.e., in the test system, steam was condensed inside of the tubes and coolant was circulated through the shell. The condenser energy balance was determined from the inlet and outlet coolant conditions (flow rate and temperatures) and by monitoring the steam condensation temperature near the entrance to the condenser. Isothermal operation of the steam generator was confirmed by multiple surface temperature measurements with a handheld infrared thermometer. However, surface temperature measurements of the bottom flange of the condenser and the hot well showed that the condensate was subcooled to temperatures very near those of the inlet coolant.

Steam condenser performance was evaluated using the governing equation:

$$Q_{cond} = UA_{cond}\Delta T_{lm} \qquad \text{[Eq. 2]}$$

where Q_{cond} is the rate of heat transfer, U is the condenser's heat-transfer coefficient, A_{cond} is the condenser's surface area, and ΔT_{lm} is the log mean temperature difference for a counterflow heat exchanger with a condensing fluid on one side.

Transfer of heat from the condensing steam to the circulating fluid was restricted by a series of thermal resistances that include the steam condensation convection coefficient, the

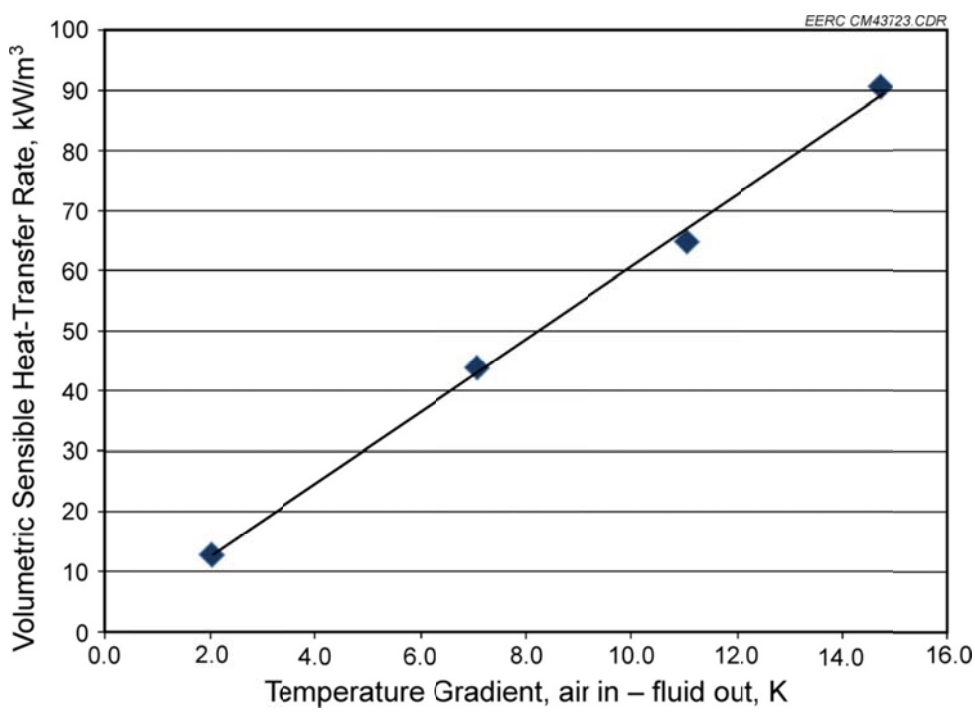

Figure 10. Experimentally measured sensible heat-transfer data for the air exchanger.

thermal conductivity of the metal tube wall, the thermal conductivity of the protective film coating, and the convective heat transfer of the fluid side of the heat exchanger. In relative terms, the steam-side convection coefficient, the metal tube thermal conductivity, and the liquid-side convection coefficient are estimated to be 2–3 orders of magnitude smaller than the film's thermal resistance; therefore, the condenser's heat-transfer coefficient is dominated by the thermal resistance presented by the protective film.

The effective tube surface thermal conductivity was determined for each test condition by assuming the entire thermal resistance was because of the film; the pertinent data are summarized in Table 3. It was found that the effective film thermal conductivity values were only one-third to one-quarter of the values estimated during the design of the condenser. This appears to be the underlying reason for the higher-than-anticipated temperature differences between the condensing steam and the working fluid.

In addition to the poorer-than-expected heat transfer, the condenser also suffered a tube breech, and the steam generator vacuum could not be maintained. An internal inspection of the condenser with a borescope suggests that the leak was caused by damage to the film on an isolated tube during assembly.

CONCLUSIONS AND RECOMMENDATIONS

In summary, the limited amount of Stage 1 testing has shown that performance of the EERC dry cooling technology is consistent with earlier observations and modeling assumptions. The test facility that was constructed has advanced the technology by allowing systematic evaluation of key operating processes. Data collected under Stage 1 will be used to refine and substantiate the EERC dry cooling technology package.

Specific conclusions that can be drawn from Stage 1 of this project include the following:

- The dry cooling technology is very effective at dissipating thermal energy to ambient airflow. The measured sensible heat-transfer rate of the direct-contact air heat exchanger was in agreement with that observed during the exploratory project and that assumed in the economic modeling effort. Furthermore, the potential problem of working fluid drift from the air exchanger appears to be small and manageable with proper design and operation of the air exchanger packing.

Table 3. Summary of Condenser Heat-Transfer Data at Constant 10-kW Thermal Load

Condenser Test	Log Mean Temperature Difference, ΔT_{lm}, K	Overall Heat-Transfer Coefficient, U, W/m^2/K	Protective Film Effective Thermal Conductivity, W/m/K
1	28.6	229	0.035
2	30.4	205	0.031
3	31.1	203	0.031
4	22.4	313	0.047

- Improved steam condenser performance is needed in order to take full advantage of the air exchanger's potential. A fluid-cooled steam condenser was tested first since this was viewed as a more attractive configuration for new power plants that could accommodate a novel condenser design. However, the thermal resistance of the tested condenser negates the good performance of the air exchanger by introducing a high temperature differential between the condensing steam and the working fluid coolant. An analysis is ongoing to identify improvements based on the tested condenser, but another path forward will be to evaluate a water-cooled condenser that is part of the Stage 2 testing. The water-cooled condenser necessitates the addition of a water-to-hygroscopic working fluid heat exchanger, but it could result in less complex heat exchanger and condenser designs and may ultimately translate into a more competitive configuration.

After evaluation of the information gained during Stage 1 testing, it appears that the technology still has significant potential as a dry cooling alternative for power plants. Therefore, it is recommended that the concept should advance to Stage 2 evaluation, which consists of an expanded experimental evaluation, testing of a water-cooled condenser, and an in-depth revision of the economic comparison between this technology and conventional dry cooling options.

REFERENCES

1. U.S. Department of Energy National Energy Technology Laboratory. *Water Requirements for Existing and Emerging Thermoelectric Plant Technologies—April 2009 Revision;* 402/080108; April 2009.

2. Maulbetsch, J. *Comparison of Alternate Cooling Technologies for California Power Plants: Economic, Environmental and Other Tradeoffs*; Document No. 1005358; Electric Power Research Institute: Palo Alto, CA, 2004.