novozymes
Rethink Tomorrow

DOOSAN

Rethink tomorrow

Low-Energy Solvents for Carbon Dioxide Capture Enabled by a Combination of Enzymes and Ultrasonics

Pacific Northwest NATIONAL LABORATORY
Proudly Operated by Battelle Since 1965

UK UNIVERSITY OF KENTUCKY
Center for Applied Energy Research

DE-FE0007741
Project Kick-off Meeting
DOE-NETL
November 8, 2011

novozymes
Rethink Tomorrow

Outline

- Introduction
  - Project Objective
  - Budget & Duration
  - Project Team & Organization
  - Project Tasks & Schedule
  - Risk Management - Initial
- Project Partner Introductions & Contributions
  - Novozymes
  - PNNL
  - University of Kentucky
  - Doosan Power Systems
- Success Criteria

Overall Project Objective

- Complete a bench-scale study and corresponding full technology assessment to validate the potential in meeting the DOE Program Objectives of a *solvent-based post-combustion carbon dioxide capture* system that integrates
  - a low-enthalpy, aqueous potassium carbonate-based solvent
  - with an absorption-enhancing carbonic anhydrase enzyme catalyst
  - and an ultrasonic-enhanced regenerator
  - in a re-circulating absorption-desorption process configuration

DOE Program Objectives

Develop solvent-based, post-combustion technology that

- Can achieve ≥90% CO_2 removal from coal-fired power plants
- Demonstrates progress toward the DOE target of <35% increase in LCOE

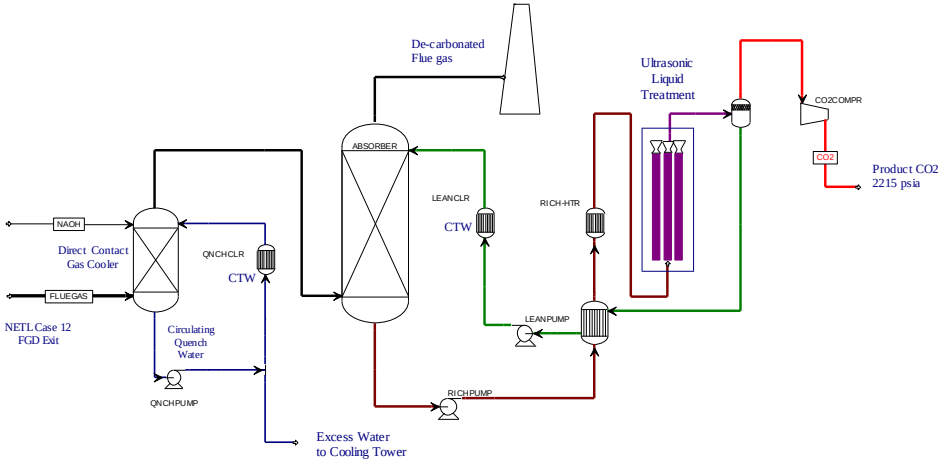

Project Overview

- Project Participants

- Project Duration: 10/1/2011 – 9/30/14

- Total Project Budget: $2,088,643
  - FFRDC Share: $489,949
- Total Project Award: $1,598,694
  - DOE Share: $1,168,670
  - Total in-kind Cost Share: $430,024

Project team/project organization

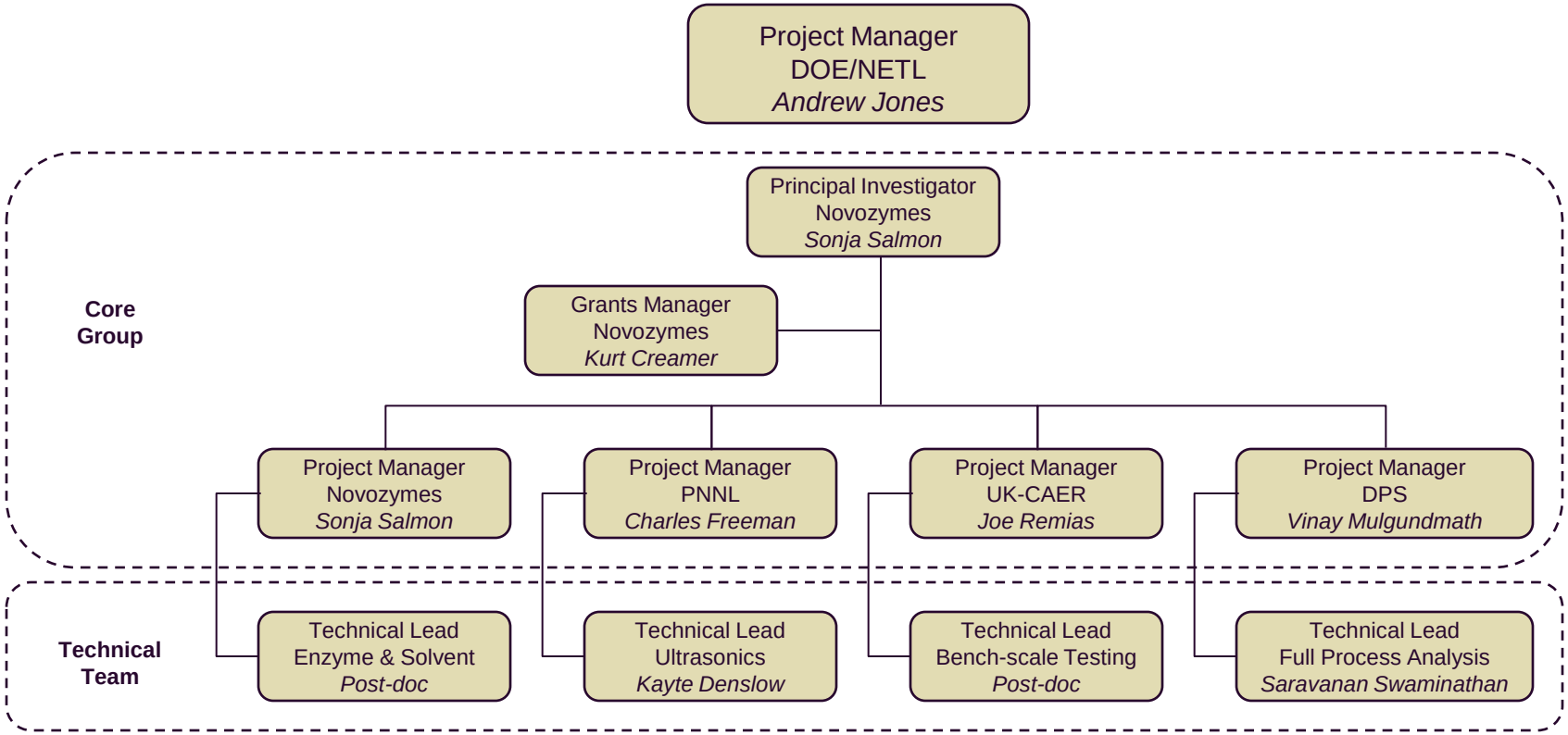

novozymes® Rethink Tomorrow

Project tasks and schedule

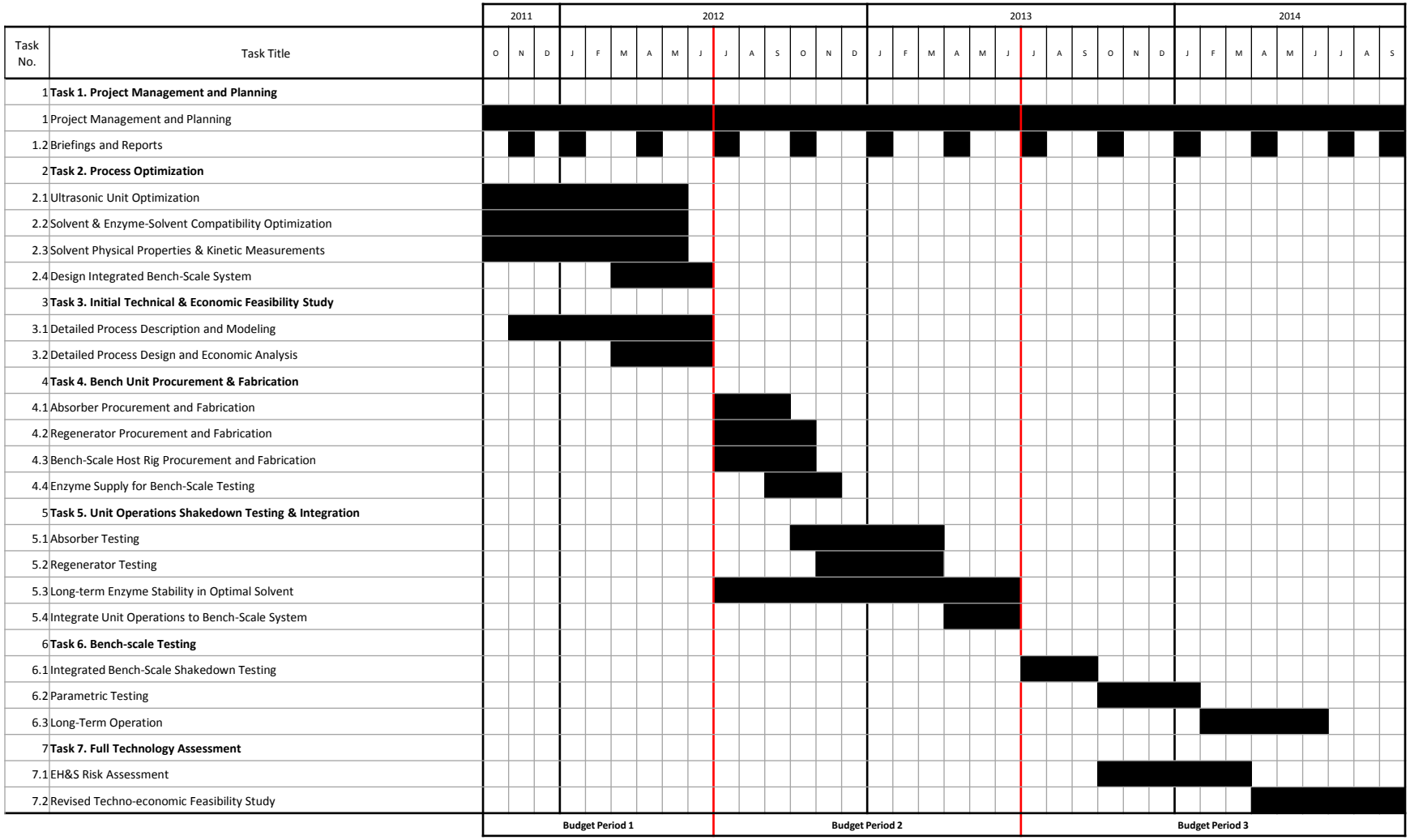

novozymes
Rethink Tomorrow

Key Meetings

- Key Core Group Meetings
  - Project Kick-off Meeting at NETL
  - Bench-scale Design Working Session
  - DOE Project Manager Site Visit with Project Review
  - Full Techno-economic Feasibility Working Session
- Technical Working Sessions
  - Subtask 2.1: Ultrasonics-enzyme optimization
  - Subtask 3.1: Process modeling
  - Subtask 5.4: Bench-scale unit operations integration
  - Subtask 6.1: Bench-scale shakedown & testing

novozymes
Rethink Tomorrow

Risk management – Initial Risks

- *Management Risks*
  - Establishment of contracts, work authorization, financial and administrative routines to meet DOE requirements
- *Resource Risks*
  - Staffing key technical positions. No-cost extension may be needed if time delays are unrecoverable.
- *Technical Risks*
  - Establishment of compatible optimal process conditions for integration of enzyme, solvent, and ultrasonics.

novozymes
Rethink Tomorrow

Success Criteria

Budget Period	Summarized Success Criteria
BP1	• Lab ultrasonics demonstrates a lean loading equivalent to lean loading achieved with vacuum stripping at 70°C. • CO_2 absorption rate with optimal enzyme-solvent formulation ≥ 50% the rate for benchmark 30 wt% MEA solvent, under same conditions. • Bench-scale engineering design package. • Topical Report – Preliminary Technical and Economic Feasibility Study.
BP2	• Complete construction of an integrated bench-scale system capable of treating gas flow of ≤ 30 SLPM. • Test matrix for the bench-scale parametric testing campaign.
BP3	• Complete 500 hours of integrated bench-scale testing. • Topical Report - Final Technical and Economic Feasibility Study. • Topical Report – Preliminary EH&S Assessment. • Final Report.

Project Partner Introductions & Contributions

- Partner Profile
- Technology Background
- Specific Objectives & Deliverables

Enzymes & Solvents	Ultrasonics & Aspen®	Bench-scale Testing	Full Process Analysis

Novozymes in Brief – World Leader in Bioinnovation

- Largest market share of all players in Industrial Enzymes (47%)
- More than 60 years legacy in the business
- 2010 sales of USD ~ 1.75 billion
- 20 years sales growth CAGR of 8%
- 2010 EBIT margin of ~ 22%
- ~ 14% of sales spent on R&D
- + 6,300 granted and pending patents
- + 5,500 employees
- More than 700 products used in 130 countries in over 30 different industries

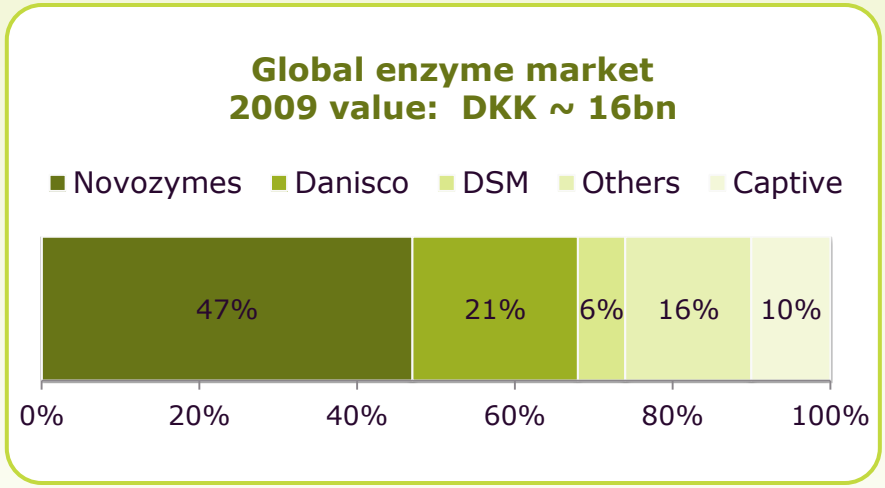

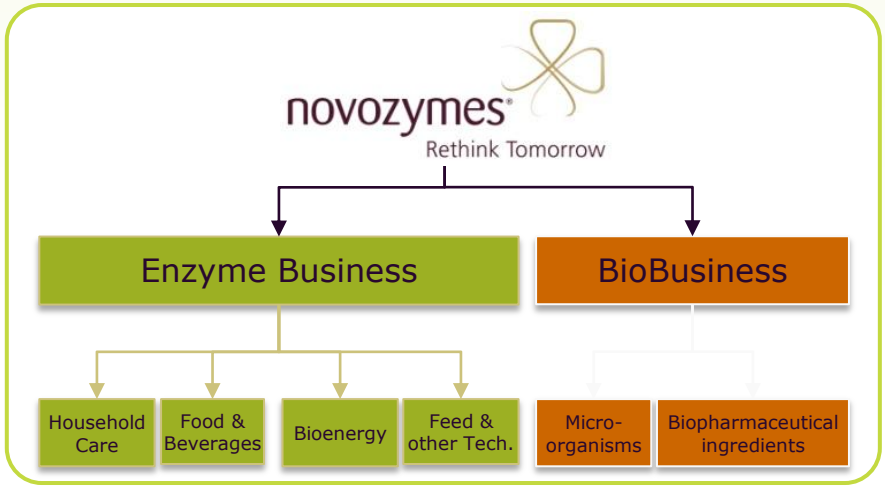

*A+B shares April, 2011

novozymes
Rethink Tomorrow

Close to our customers around the world

- Producing more than 700 products
- Reliably delivering to customers in 130 countries
- Serving more than 30 different industries
- We are global leader in industrial enzymes & microorganisms
- With >5,500 dedicated employees worldwide

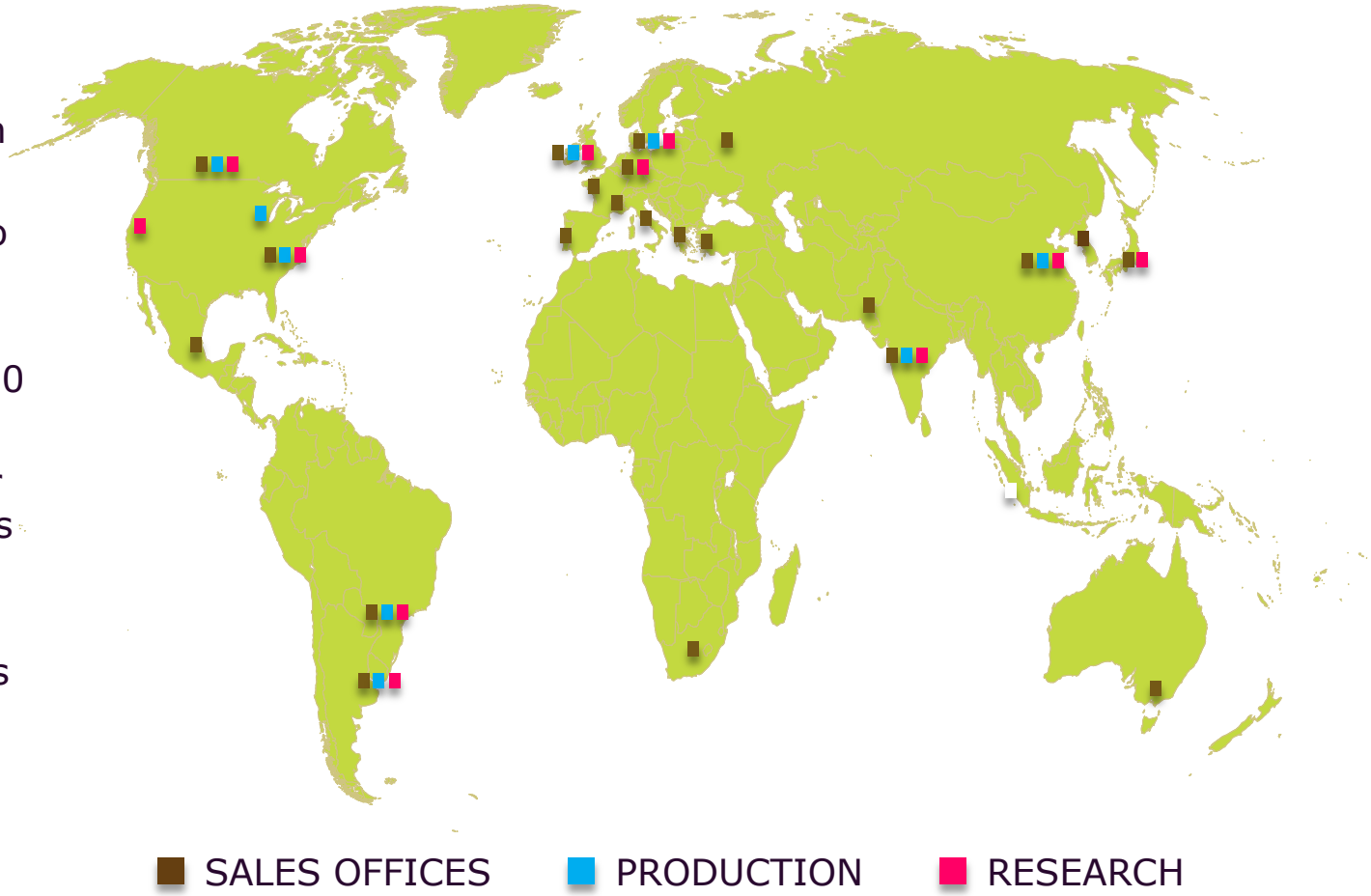

novozymes
Rethink Tomorrow

Enzymes create “more from less”

Enzyme technology is green technology

Enzymes are biological catalysts

Enzymes save energy

Enzymes save chemicals

Enzymes save raw materials

Enzymes save limited resources and reduce water pollution

novozymes
Rethink Tomorrow

Enzymes are produced sustainably and efficiently

1. Improving the production host
Improving the microorganisms' ability to produce more enzymes per m^3 fermentation tank through genetic engineering

2. Optimizing the industrial production Traditional production optimization
- Process optimization
- Equipment optimization
- Input optimization

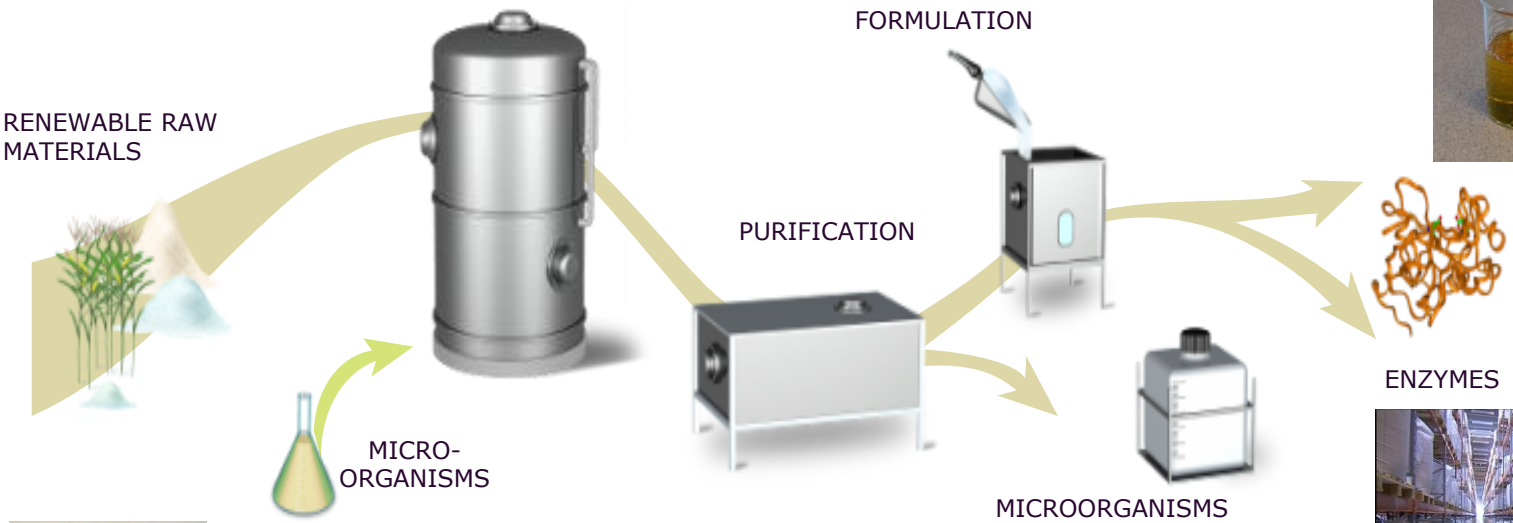

3. Improving the enzyme produced
Improving the efficacy of the enzymes through protein engineering. Customers buy efficacy, not volume

Our global collaborations drive sustainable development, such as the Sugar Platform…

- … providing renewable raw materials for an increasing range of sustainable products

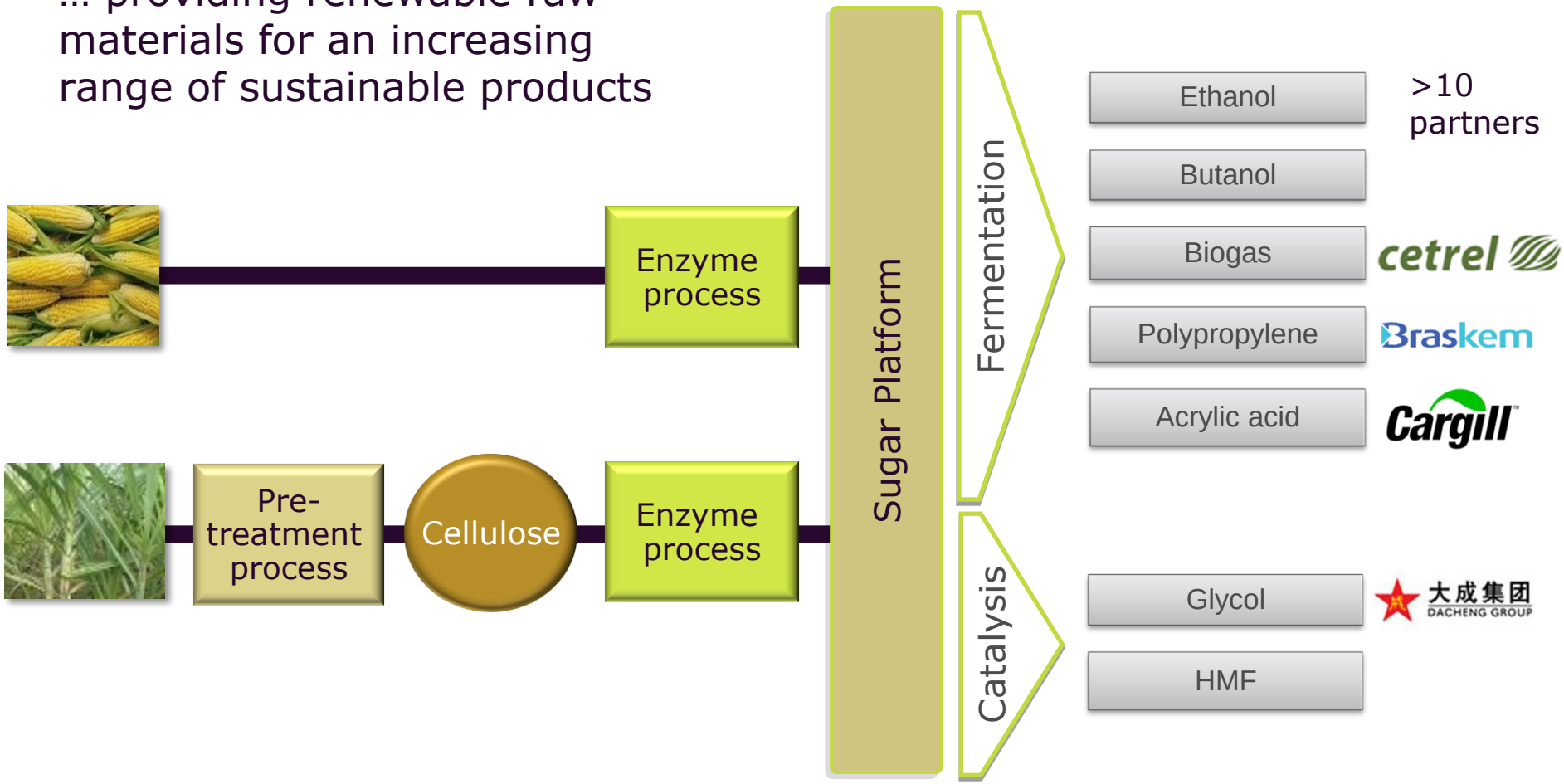

Research & Collaboration leads to Commercial Viability

For example - A combination of Enzyme and Process improvements leads to success for cellulosic ethanol

Novozymes developed and launched an enzyme product that **enables total cellulosic ethanol production cost of down to USD 2/gal**

– an 80% cost reduction over the last 2-3 years…

…successfully building on work supported by the DoE since 2001 (when the enzyme cost alone was at USD 6-8/gal cellulosic ethanol)

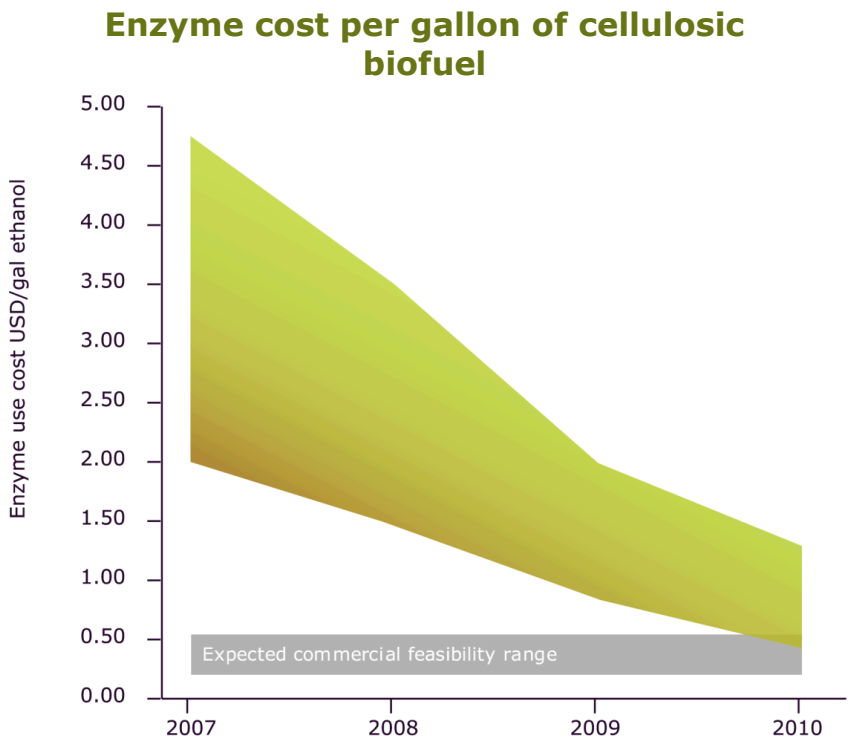

Reducing CO_2 Emissions together with Our Customers

- In 2009, Novozymes helped customers save 27 million tons of CO_2
- Novozymes vision: Working towards a future where biological solutions create the necessary balance between a better business, a cleaner environment and better lives

Net CO_2 saving using 1kg enzyme in different production processes

Novozymes Technology Background and Contribution for Project Award DE-FE0007741

Enzyme-Promoted CO_2 Solvent Process Concepts

Temperature & pH operating range

Enzyme temperature and pH constraints allow two operating concepts

Temperature: 40 – 70 deg.C

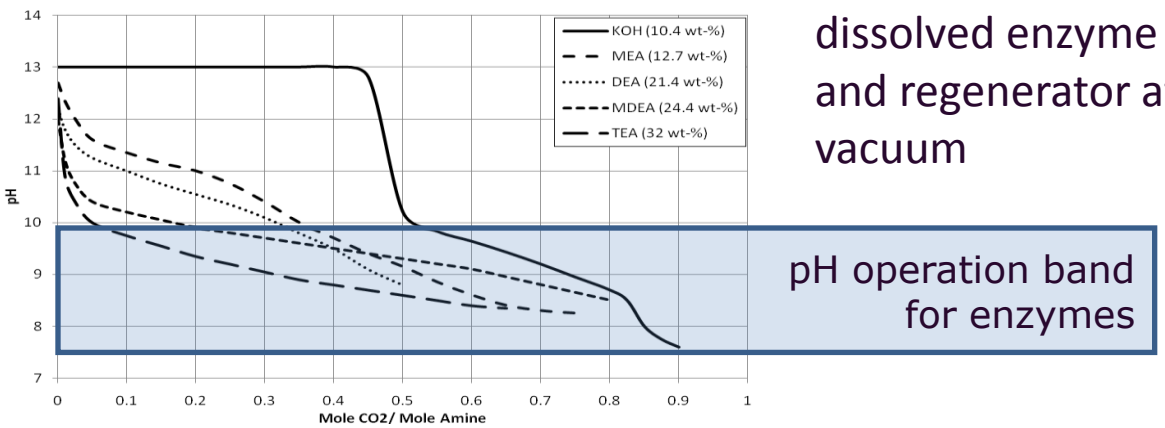

Titration curves showing pH during neutralization of ethanolamine and KOH solutions with CO_2 (redrawn after Kohl & Nielsen, 1997, p. 47); shaded area is the carbonate/bicarbonate buffer region.

A:
MDEA or K^+ with immobilized enzyme in absorber

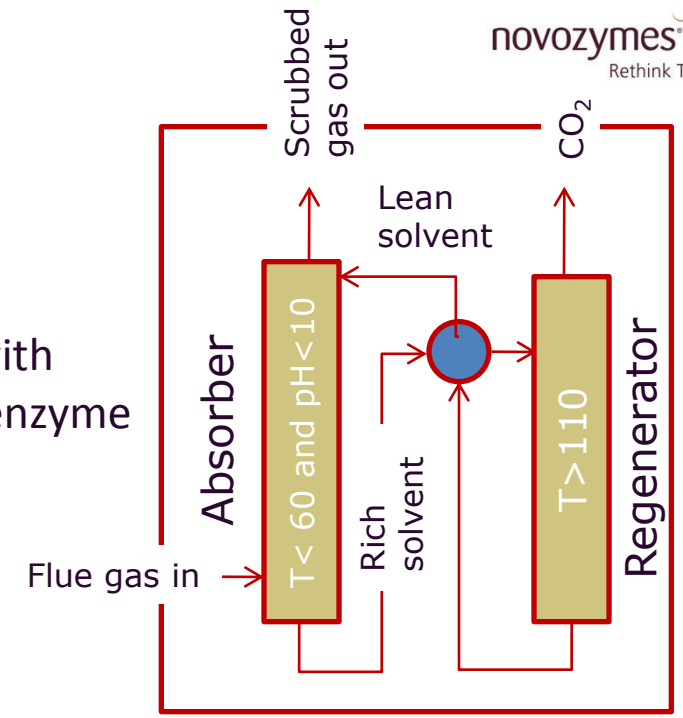

B:
MDEA or K^+ with dissolved enzyme and regenerator at vacuum

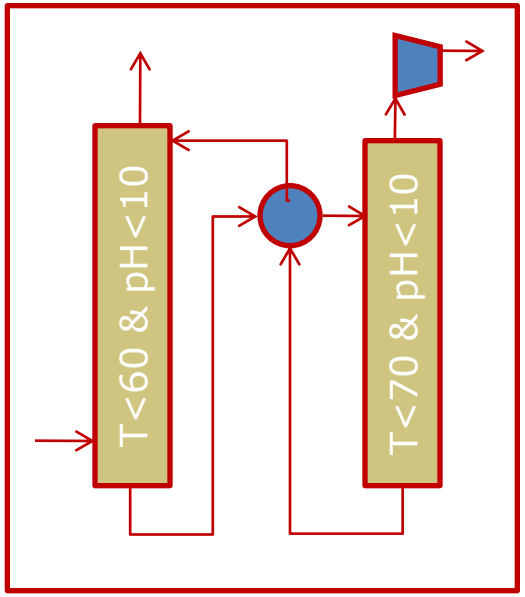

Chemical reactions for bicarbonate mechanism

1) CO_2 (g) < -- > CO_2 (aq) (gas-liquid physical mass transfer)
2) CO_2 (aq) + HO^- < -- > HCO_3^-
3) HCO_3^- + HO^- < -- > $CO_3^=$ + H_2O (pKa = 10.3)
4) CO_2 (aq) + H_2O < -- > H_2CO_3
5) H_2CO_3 + HO^- < -- > HCO_3^- + H_2O (pKa = 6.4)
6) H_2O < -- > H^+ + HO^-

Equations 2.2 and 2.3 represent the reactions in equilibrium through the alkaline buffer region (pH 6-10) relevant for CO_2 absorption.

CO2 in solution wt-%	pH 7.3	pH 8.1	pH 9.0
CO2 (aq)	0.01	0.01	0.01
H2CO3	0.00002	0.00002	0.00002
HCO3-	0.22	1.8	10.0
CO3=	0.0	0.1	4.0
Total CO2	0.2	1.9	14

J. Mogensen, ChemCAD simulation.

Enzyme-catalyzed CO_2 reaction mechanism

Carbonic anhydrase catalyzes (increases kinetic rates) the hydration of CO_2 and dehydration of bicarbonate resulting in enhanced absorption and desorption of CO_2 into and out of a CO_2 absorber solvent.

Hydration / Absorption

$$H_2O + CO_2 \underset{}{\overset{CA}{\rightleftharpoons}} HCO_3^- + H^+$$

Dehydration/ Desorption

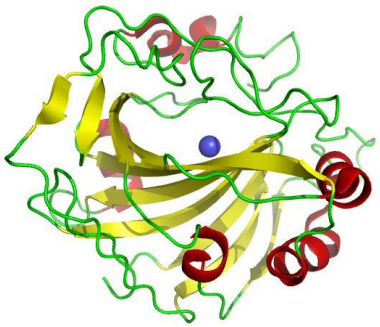

3D structure of Human CAII

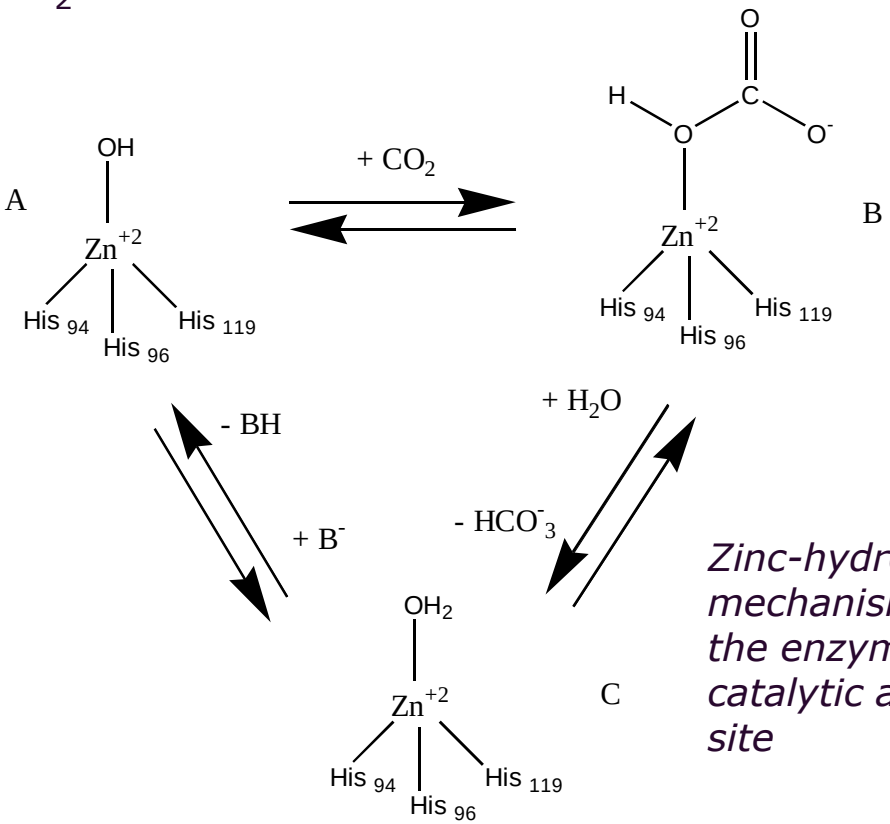

Zinc-hydroxide mechanism at the enzyme's catalytic active site

”Observing” the absorption effect - Carbonic anhydrase accelerates drop in pH when CO_2 is present

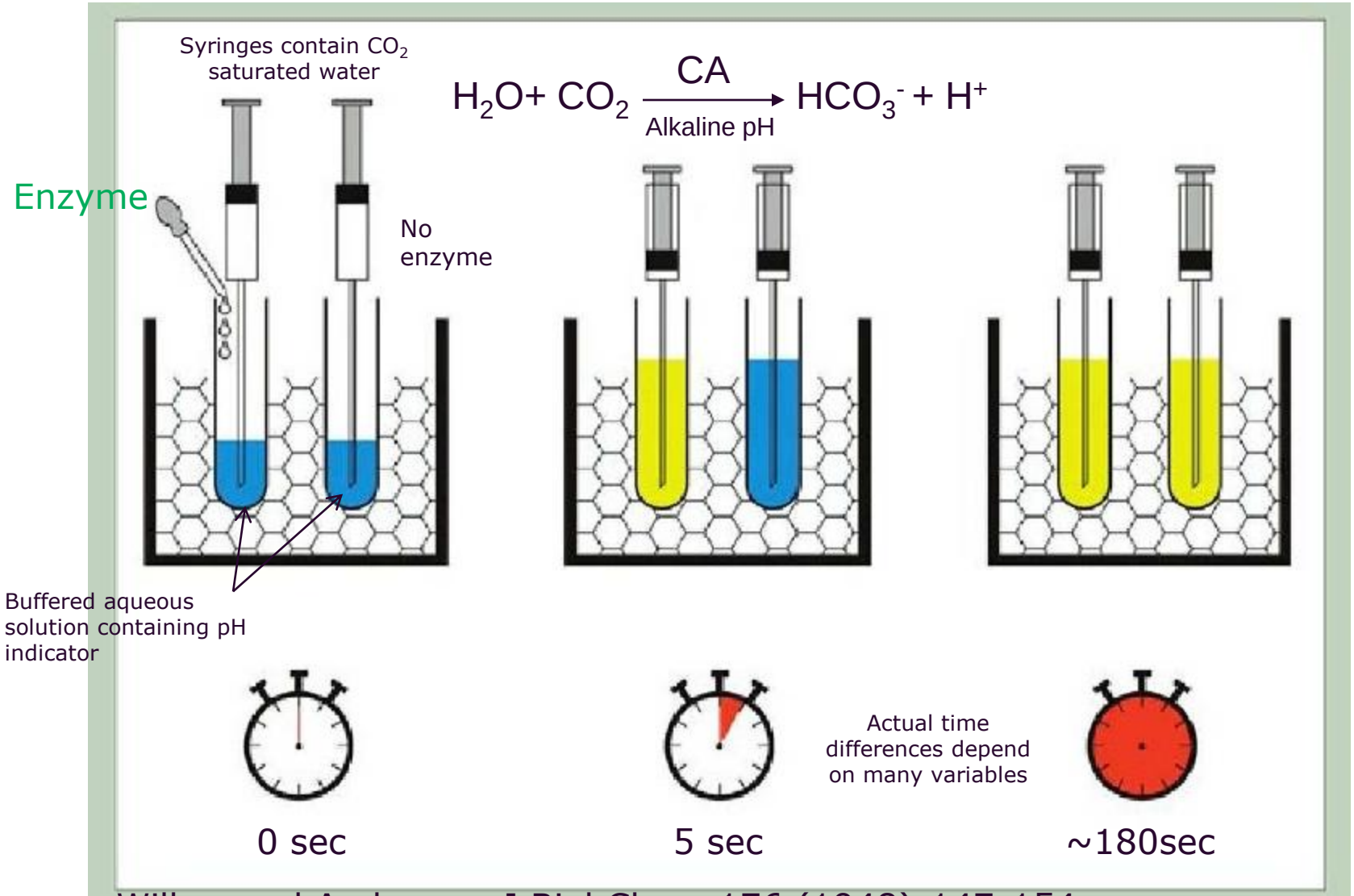

Wilbur and Anderson, J Biol Chem 176 (1948):147-154

Different carbonic anhydrases have different properties, e.g. thermal stability

Heating time: 15 minutes at temperature indicated

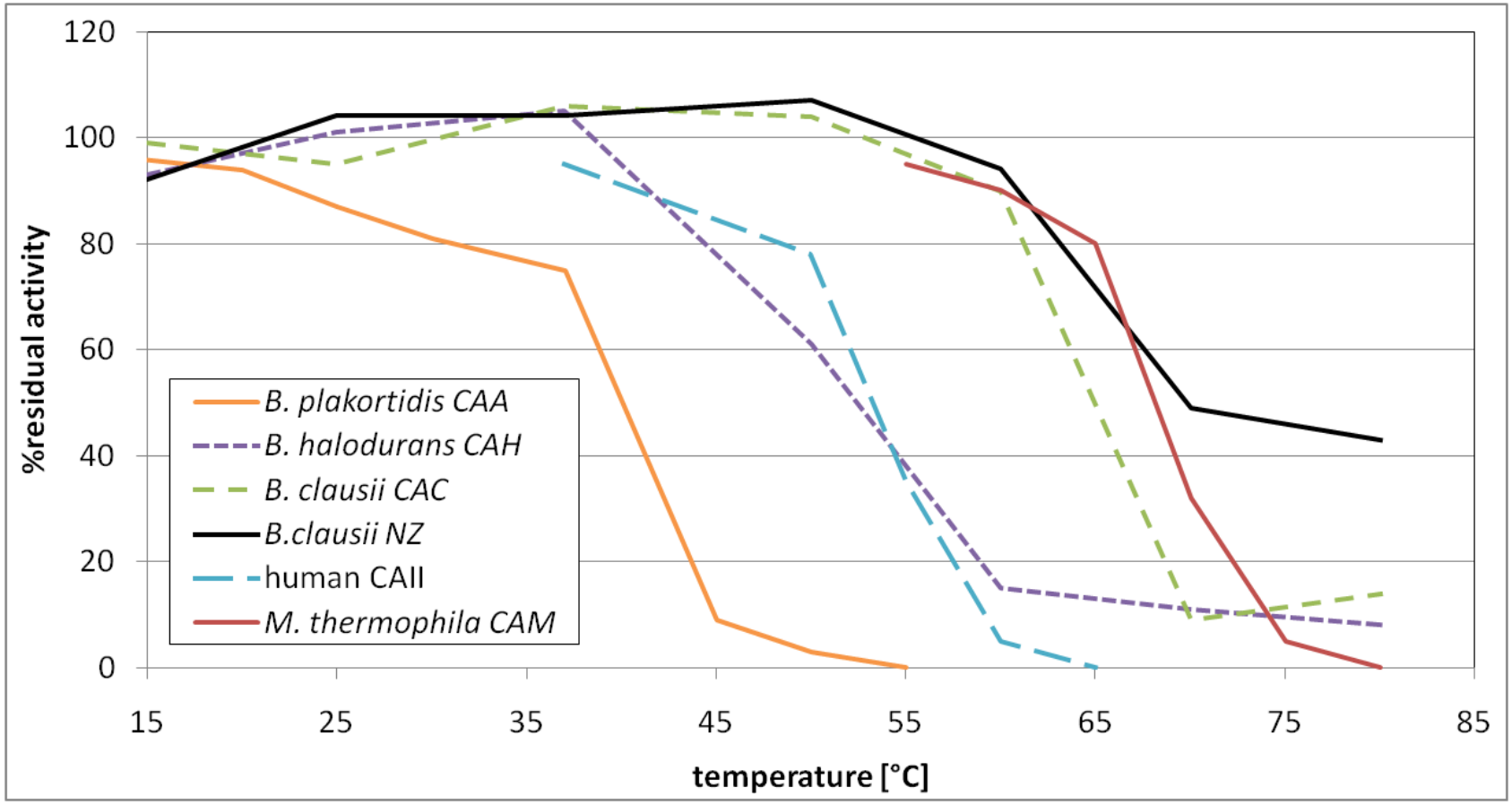

M. Borchert and P .Saunders, 2009, Dansk Kemi 90(12): 24-27

Initial single-pass CO_2 absorption lab results

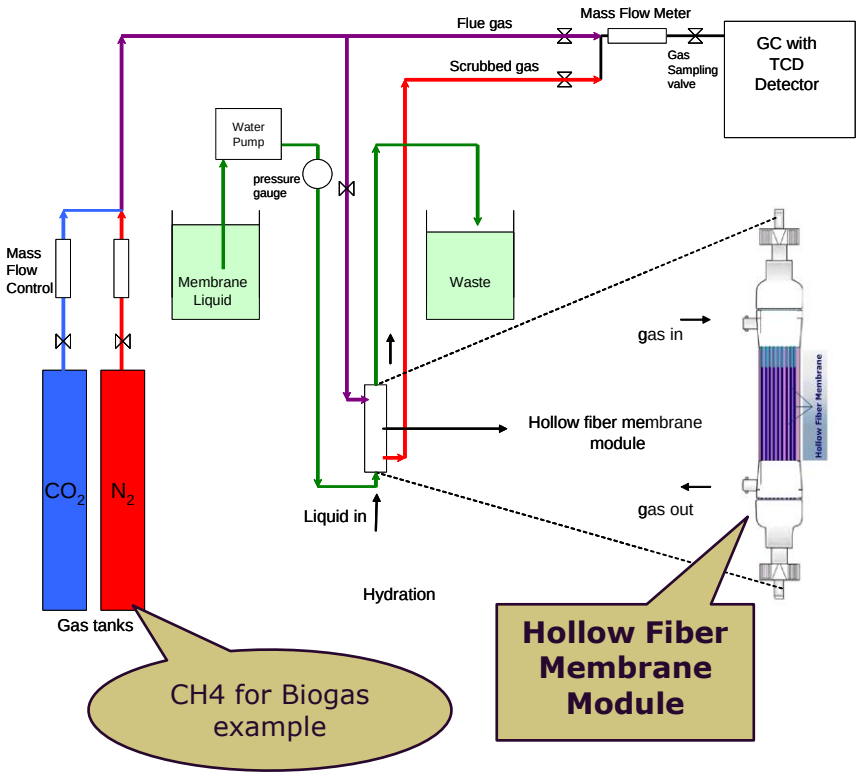

Model gas: N_2/CO_2; Data Collected at 25°C

Absorber Solvent	pH	% CO2 in Scrubbed Gas	% CO2 in Flue Gas	% CO2 Removed
1M NaHCO3	9.5	10.2	15.3	33
1M NaHCO3 + CA	9.5	0.8	14.3	94
1M NaHCO3 + CA	10	<0.1	15.3	>99

Conditions were found where all CO_2 is absorbed

Absorber Solvent	% CH4 in Enriched Stream	% CH4 in Feed Stream	% CO2 Removed
DI Water	62.9	59.4	~9
1M NaHCO3 pH 9.3	83.0	59.4	~59
1M NaHCO3 + 0.6 g/L CA pH 9.3	95.7	59.4	~90

Model Biogas: CH_4/CO_2; Data Collected at 25°C

Re-circulating hollow fibre reactor for CO_2 capture

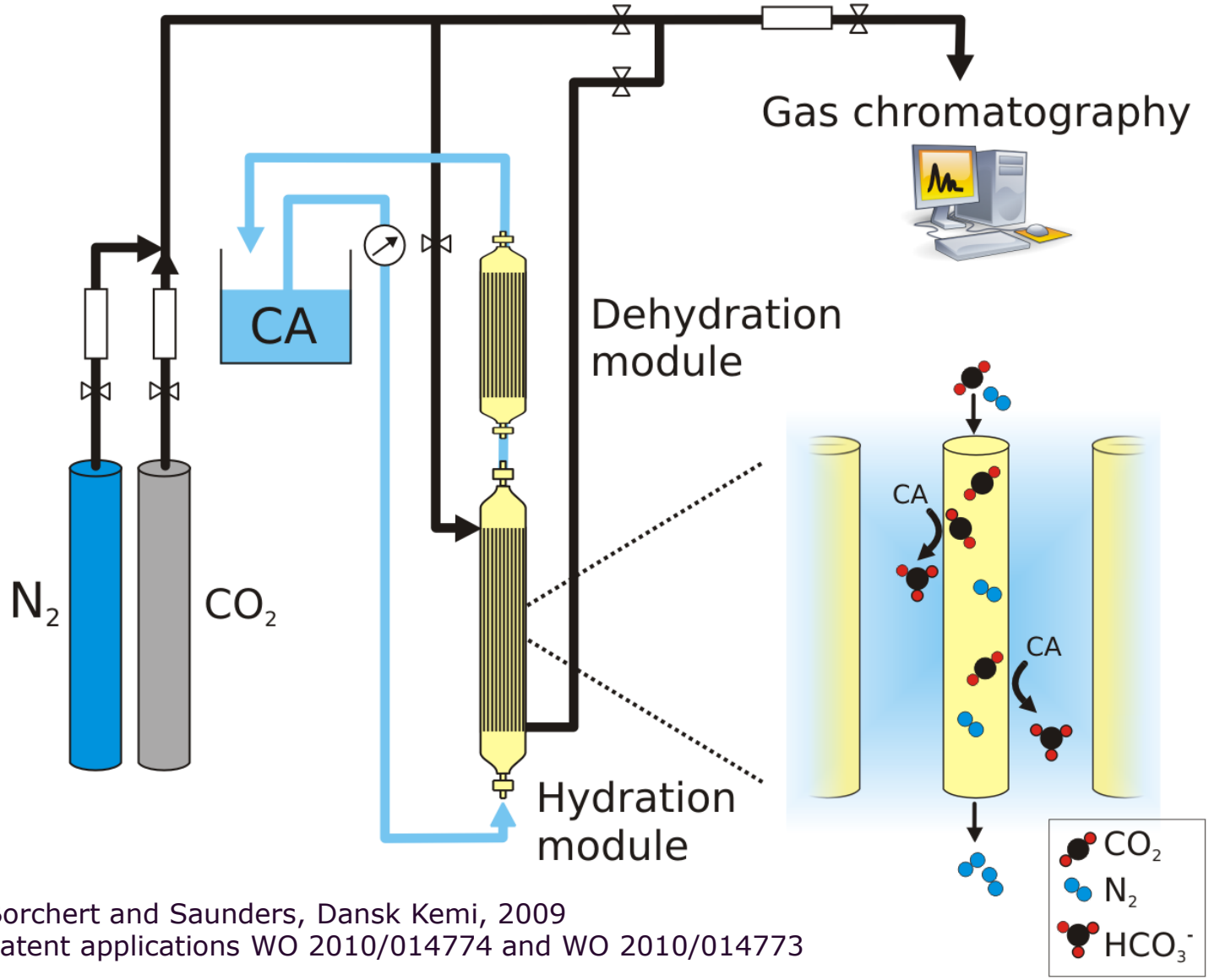

Borchert and Saunders, Dansk Kemi, 2009
Patent applications WO 2010/014774 and WO 2010/014773

Re-circulating CO_2 Capture lab reactor results

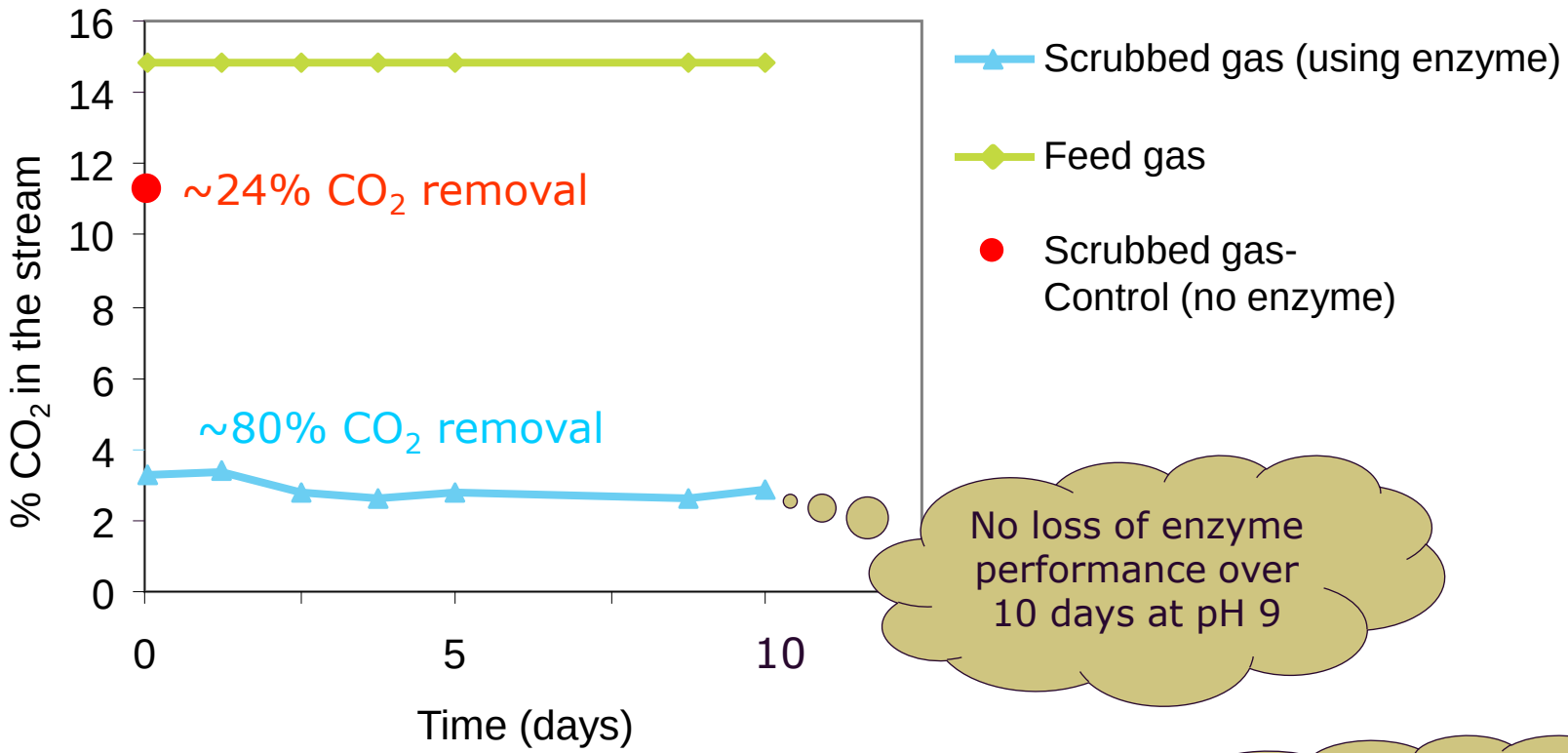

No loss of enzyme performance over 10 days at pH 9

Data collected at 25 °C at lab scale
Gas Mix: CO_2/N_2; Absorber solvent: 1M $NaHCO_3$

Similar results obtained at 50°C

Carbonic anhydrase can increase bicarbonate dehydration rate (releasing CO_2)

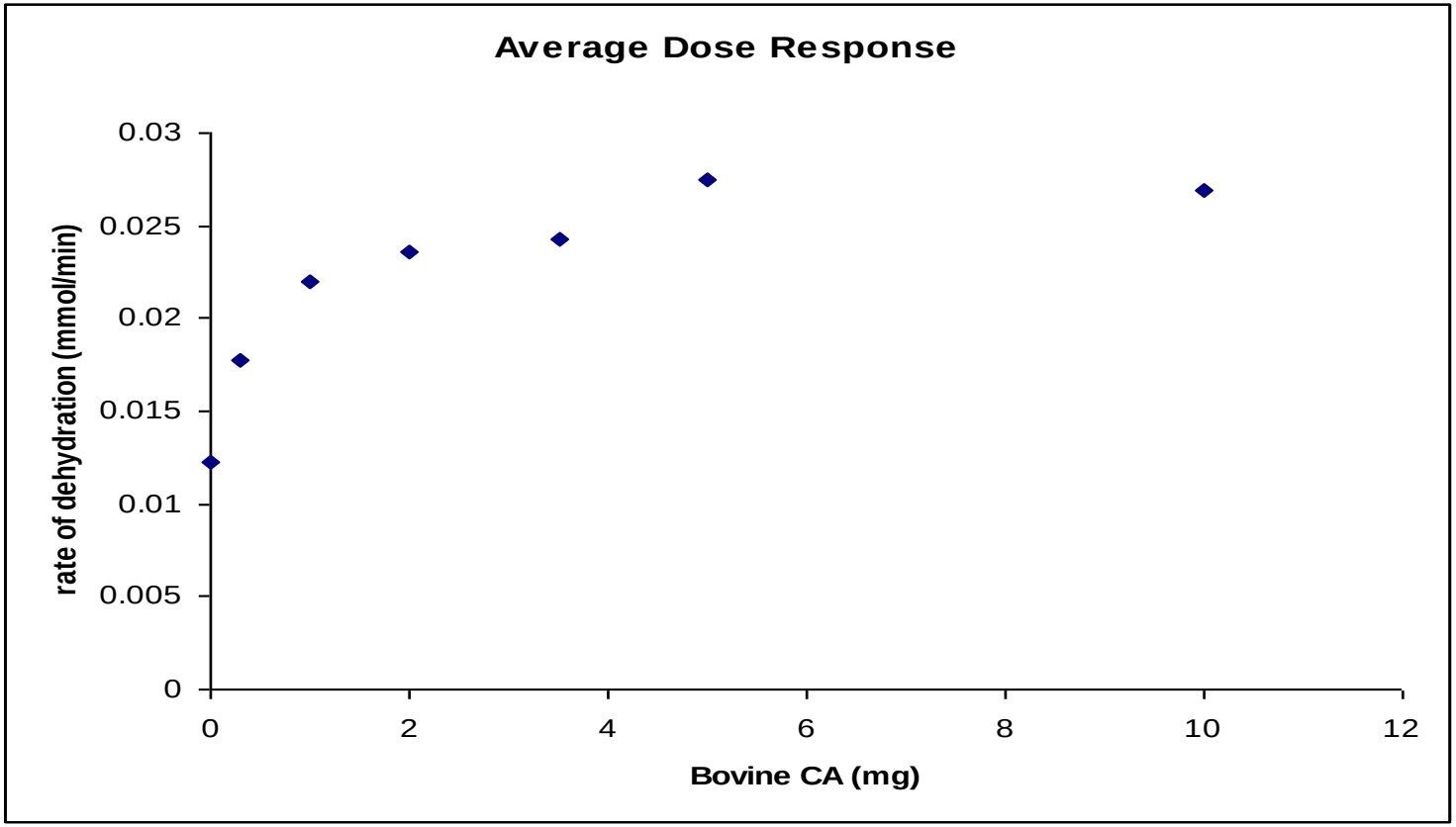

CA can tolerate “mild” ultrasonic bath

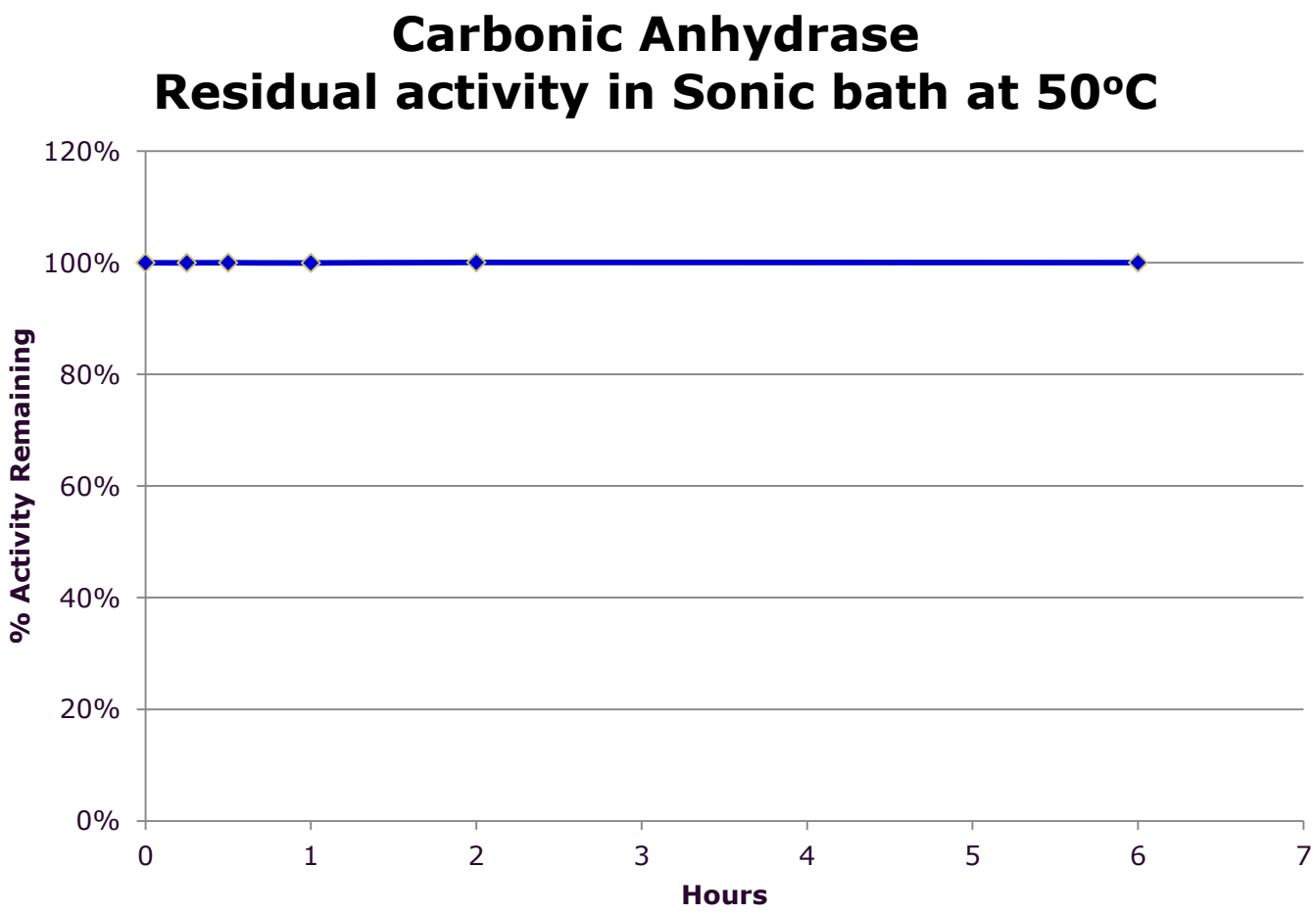

novozymes
Rethink Tomorrow

Specific Objectives and Deliverables

- **Objectives**
  - Optimize the potassium carbonate-based solvent for maximum CO_2 absorption rate
  - Demonstrate limits of enzyme robustness for setting bench-scale test ranges
  - Establish an integrated design for the bench-scale system
- **Deliverables**
  - **BP1**
    - Down-select to the optimal enzyme-solvent formulation for integrated bench-scale testing & update state point table
    - Complete detailed bench-scale unit design and engineering utilizing a refined mass and energy balance of the process
  - **BP2**
    - Establish an enzyme dosing program for the integrated bench-scale test campaign
    - Provide enzyme for bench-scale testing
  - **BP3**
    - Contribute EH&S information relevant to enzyme
    - Monitor enzyme activity in support of bench-scale testing
    - Overall completion of project and submission of the Final Report

novozymes
Rethink Tomorrow

Pacific Northwest National Laboratory

Pacific Northwest
NATIONAL LABORATORY

Proudly Operated by Battelle *Since 1965*

Pacific Northwest Laboratory (PNNL) Overview and DE-FE0007741 Project Contribution

Charles Freeman and Katye Denslow

November 7, 2011

Ultrasonic and Acoustic Capabilities at PNNL

- Acoustic modeling and simulation
- Transducer/sensor design, fabrication, and characterization
- Prototype development and field testing
- 18 issued patents; 1 pending
  - Sonochemistry
  - Foreign object and fouling detection
  - Materials, liquids, and structures characterization
    - Enhanced chemical processing
    - Process monitoring and control
    - Flaw detection
    - Characterization of material degradation
    - Liquid, slurry, and particle characterization, including mixing uniformity

Industrial Uses of Ultrasonics

- Degassing (carbonated beverages, high-temperature melting materials, bioreactor fermentations, liquid food products, etc.)
- Emulsification
- Homogenization
- Extraction
- Crystallization
- Dewatering
- Low temperature pasteurization
- Defoaming
- Particle size reduction
- Viscosity alteration

Conceptual Design of Process for Carbon Capture

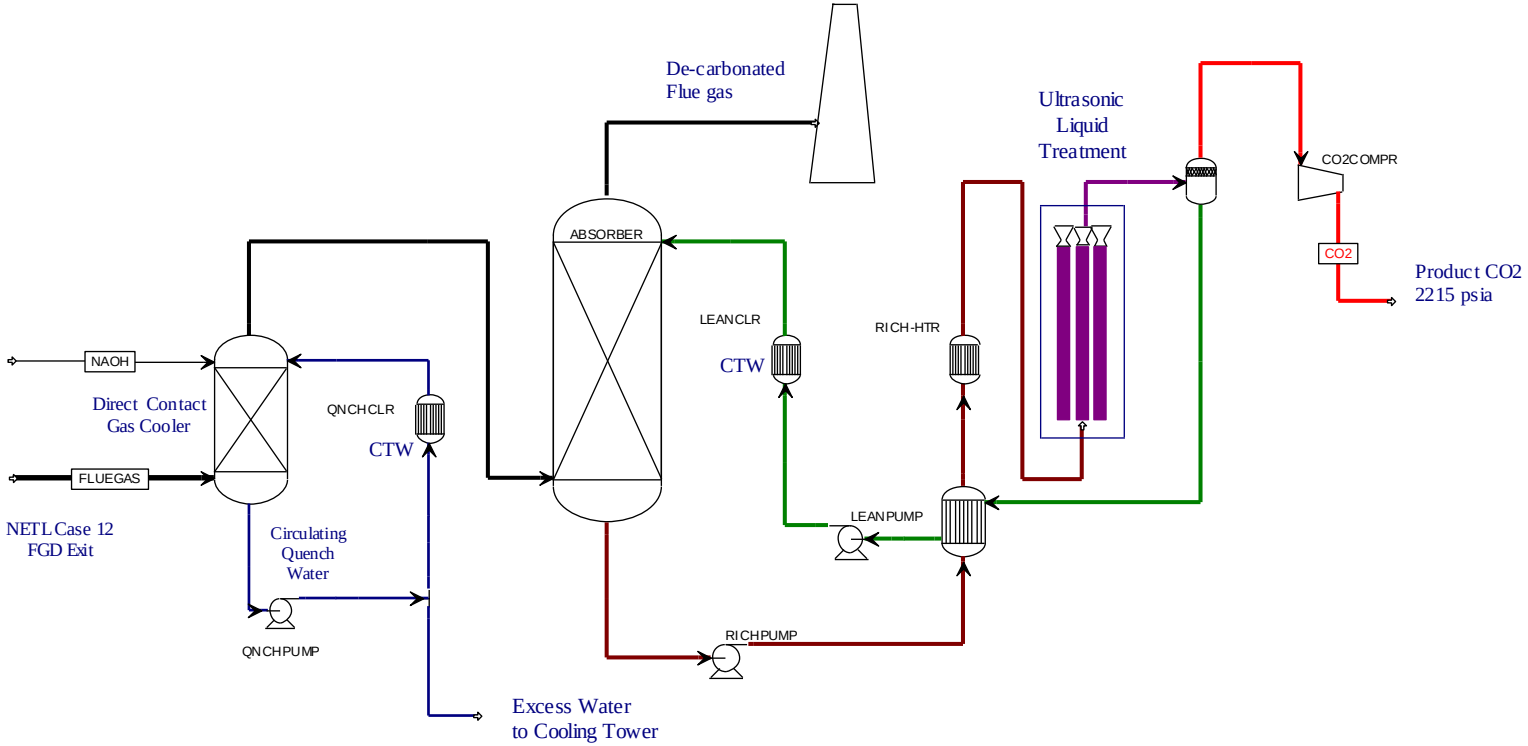

- 20 wt% K2CO3 solution and CA enzyme (dissolved or immobilized)
- Rich solvent heated by cross exchange and steam to 60-70C.
- Ultrasonically-enhanced stripping.
- Power requirement estimates less than 6 MW for the baseline power plant.

Ultrasonic Device for Bench-Scale (and larger) Systems

- Commercial 20 kHz transducer/waveguide assembly capable of sub-cavitation and cavitation levels in liquid systems.
- The transducer/waveguide assembly is coupled to a single-wall conduit via a clamp to non-invasively sonicate a fluid flowing through the spool piece.

Pacific Northwest NATIONAL LABORATORY
Proudly Operated by Battelle Since 1965

Project Responsibilities for PNNL

- 2.1 – Lead the ultrasonic regenerator optimization study in a static configuration will be performed to identify the optimal operating envelope
- 2.4 – Support the bench-scale design work
- 3.0 – Provide support for the initial technical and economic feasibility study
- 4.0 – Develop specifications and design of the bench-scale ultrasonic regenerator
- 5.2 – Lead the final assembly and shakedown testing of the ultrasonic regenerator
- 5.4 – Support integration of regenerator unit into the bench-scale system
- 6.0 – Support shakedown, parametric, and continuous testing of the integrated bench-scale system
- 7.0 – Support final technical and economic feasibility

novozymes
Rethink Tomorrow

University of Kentucky
Center for Applied Energy Research

UK-CAER at a Glance

- Center opened in 1977
- Lab originally supported growing synthetic transportation fuels industry (coal and oil shale)
- Mission expanded to include electric power generation and emissions control, carbon materials, biofuels, electrochemical processes
- Over 100 research staff and associates
- $8-14M annual financial support

Power Generation and Utility Fuels

- Kentucky Energy and Environment Cabinet
- Carbon Management Research Industrial Members
  - AEP
  - Duke
  - East Ky Power
  - LG&E and KU
  - EPRI
- ARPA-E (three years) for post-scrubbing solution dewatering
- DOE International Collaboration (five years) on catalyst development and CDI dewatering
- DOE (four years) on slipstream-scale study on solvent-based post-combustion CO_2 capture process

Importance for Enhanced Rate

	ΔH_{abs} (kJ/mol)	Rate Constant (L/mol·s)	Vapor Pressure (kPa)
MEA	84	6000	< 0.1
$(NH_4)_2CO_3$	27	44 - 3000	44*
K_2CO_3	27	0.03 - 1400	-
*35% NH_3 solution			

Importance for Enhanced Rate

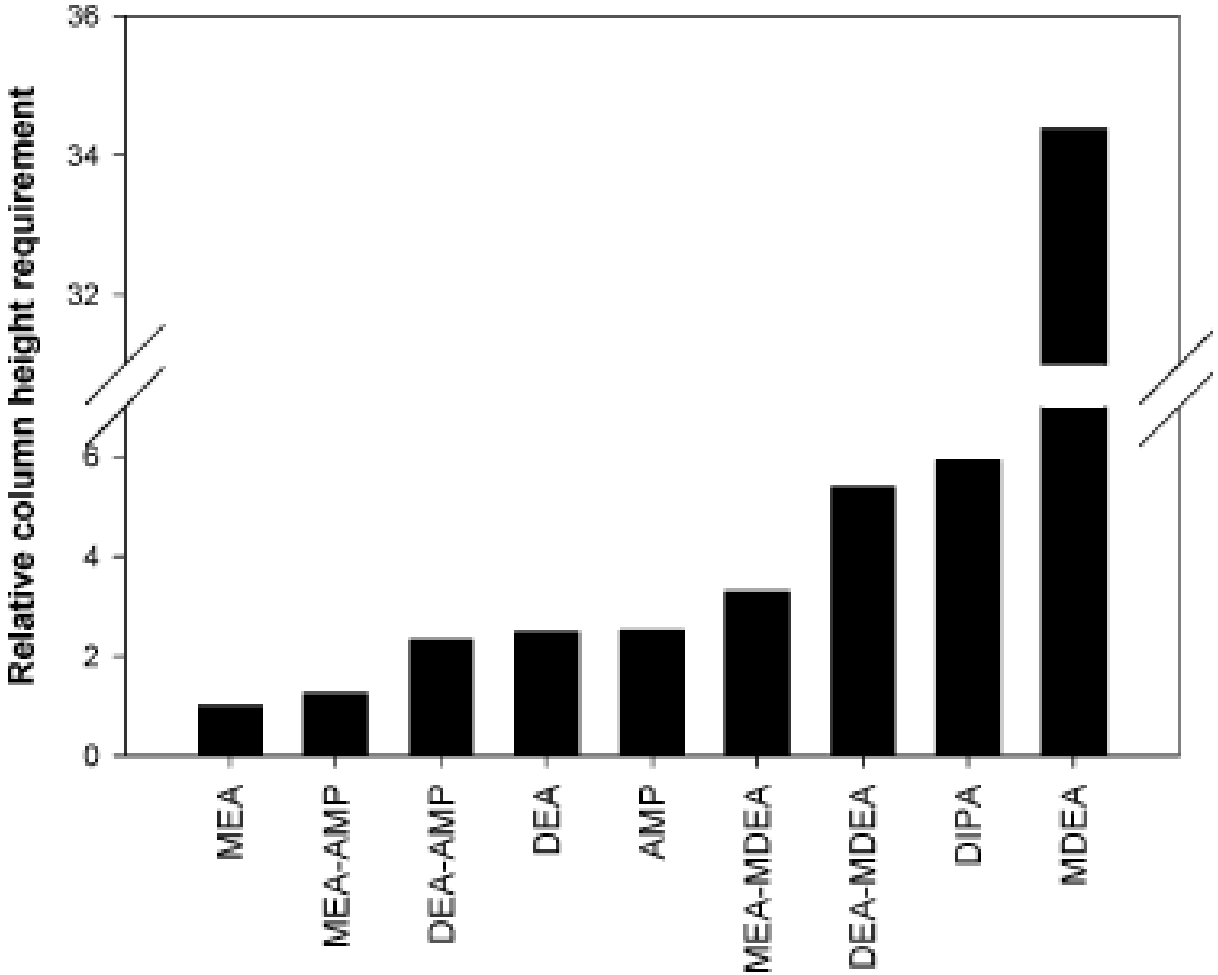

Aroonwilas, A.; Veawab, A., *Ind.Eng. Chem. Res.* **2004,** *43* (9), 2228.

CAER WWC

Similar Process Equipment

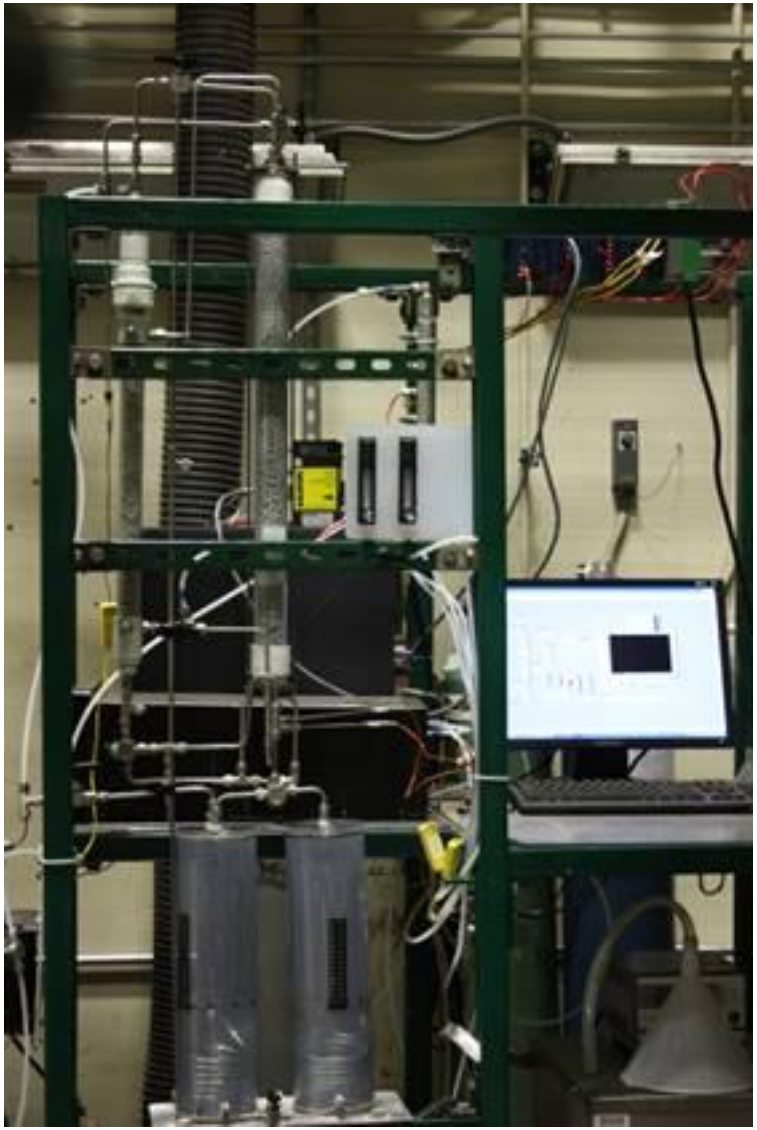

Proposed Bench-scale Process

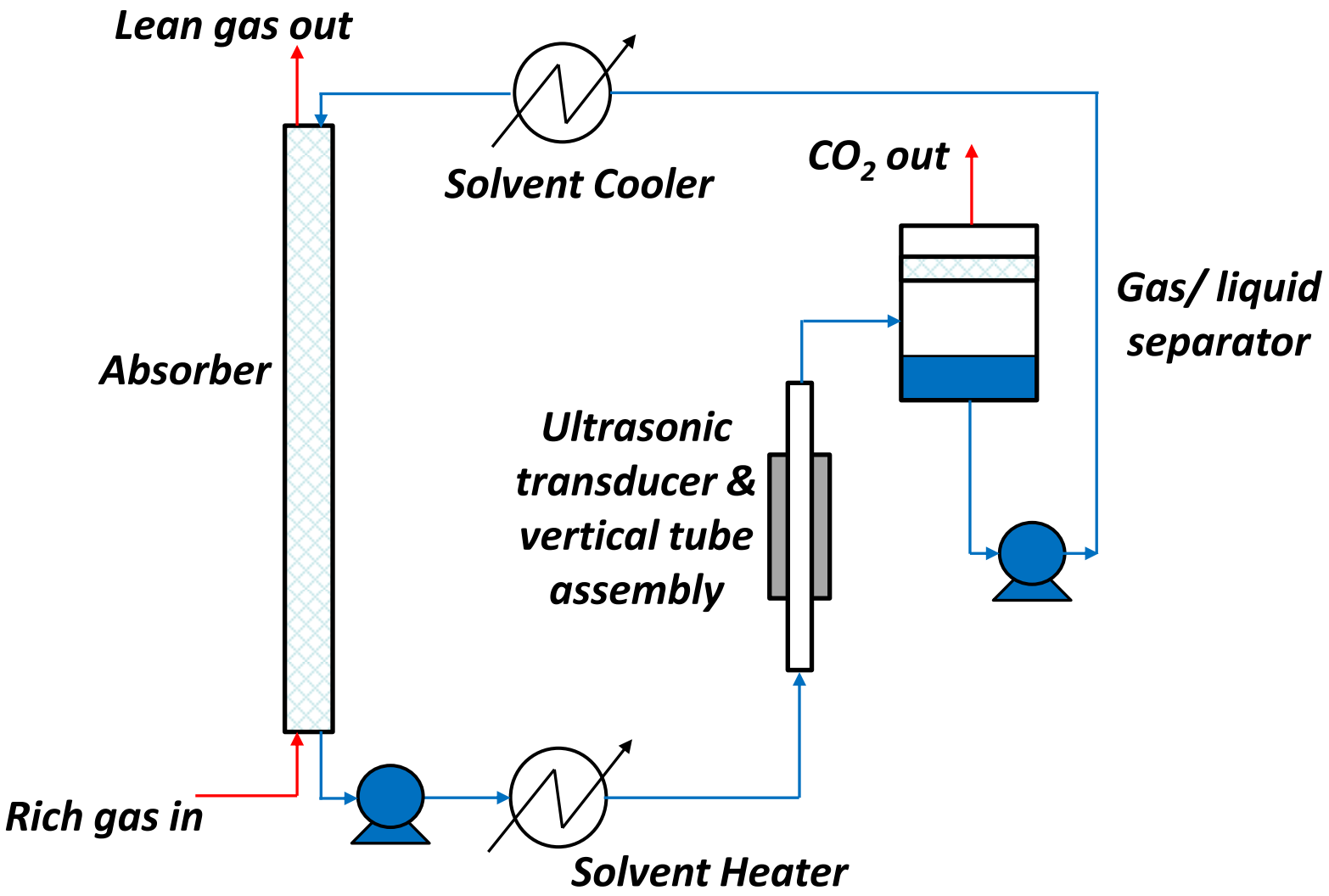

CAER Contribution

- Objectives
  - Demonstrate absorption mass transfer feasibility
  - Evaluation of Novozyme/PNNL technology using an integrated bench-scale process
- Deliverables
  - BP1
    - Mass transfer measurements using WWC
    - Contribution to updated physical properties
  - BP2
    - Absorber construction
    - Bench scale test unit (minus stripper)
    - Absorber evaluation
    - Integrate process operations
  - BP3
    - Parametric evaluation of integrated process
    - Long-term process evaluation

novozymes
Rethink Tomorrow

Doosan Power Systems

DOOSAN

Introduction to Doosan Power Systems

Dr Vinay Mulgundmath

8 November 2011

Doosan Power Systems

Global clean energy products and services.

A Proud Heritage

Babcock

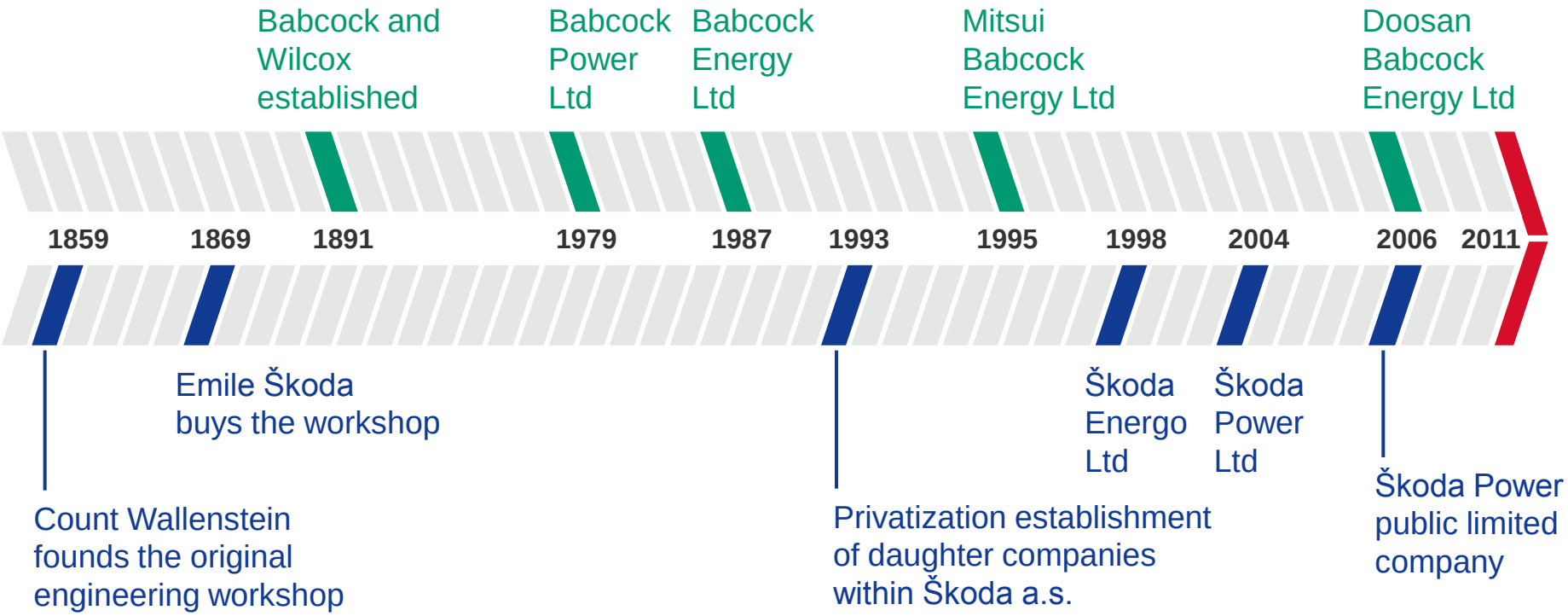

Škoda Power

Part of the Doosan Group

Doosan Group

Doosan Heavy Industries & Construction

Casting and Forging	Nuclear	**Doosan Power Systems**	Power	EPC	Desalination

	Turnover	**Employees**
Doosan Group	£12.7 Billion	38,000
Doosan Heavy Industries & Construction	£4.2 Billion	19,000
Doosan Power Systems	**£0.9 Billion**	**5,600**

Doosan Power Systems – Products and Services

Doosan Power Systems

Boilers Babcock	**Turbogenerators** Škoda Power	**Plant**	**Wind**	**Services** Babcock

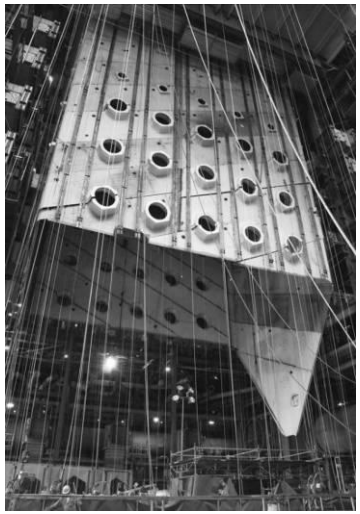

Doosan Power Systems – Locations

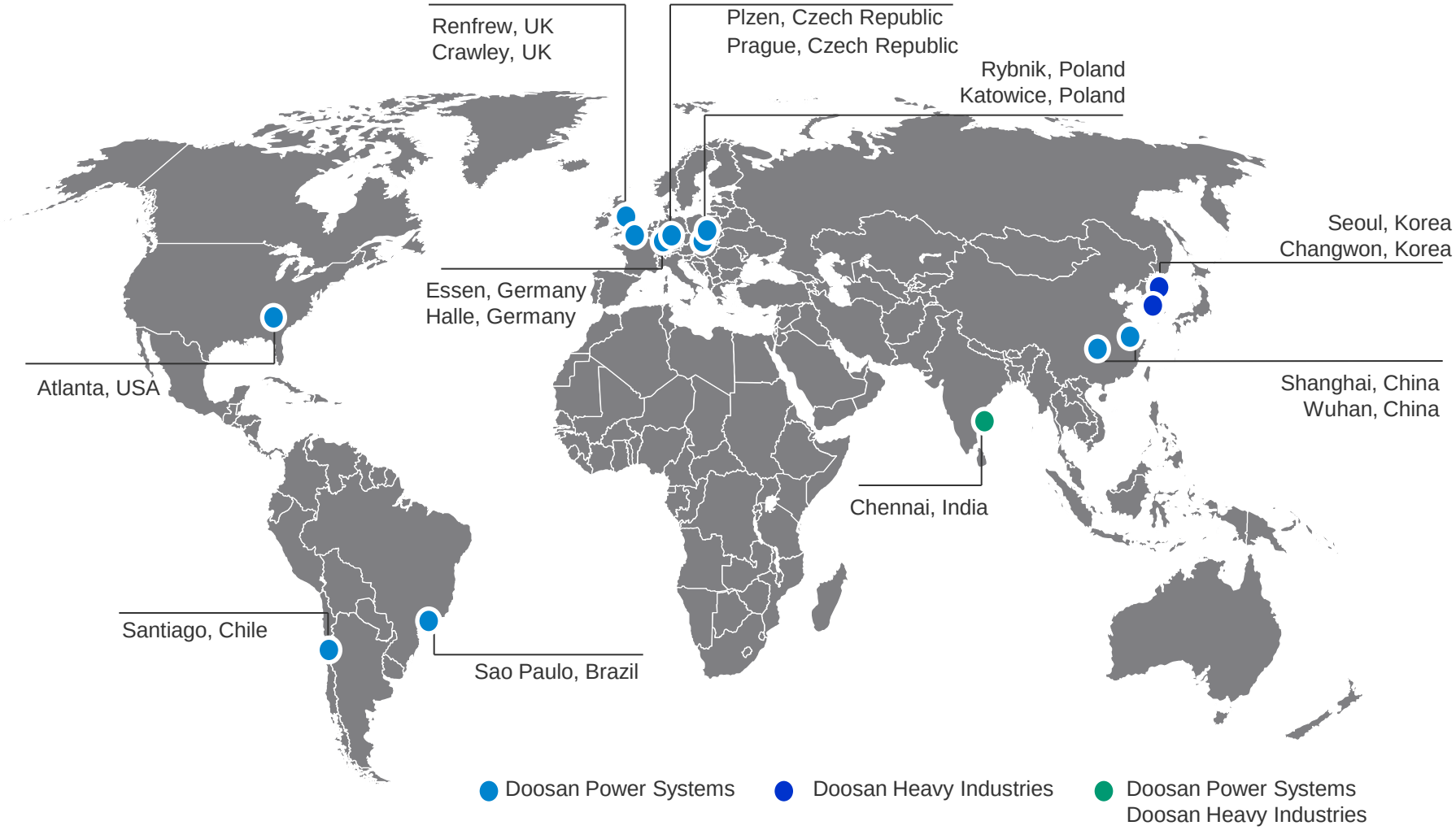

Turbogenerators

Škoda Power's turbine technology

Efficient turbogeneration for:

- Supercritical steam power plants (660 MW - 800 MW)
- Combined Cycle Power Plants (70 - 300 MW)
- Cogeneration (30 - 140 MW)
- Nuclear (200 - 1200 MW)
- Industrial (20 - 250 MW)

1000 MW Nuclear
Temelin

46 MW IST
Kuopio biomass

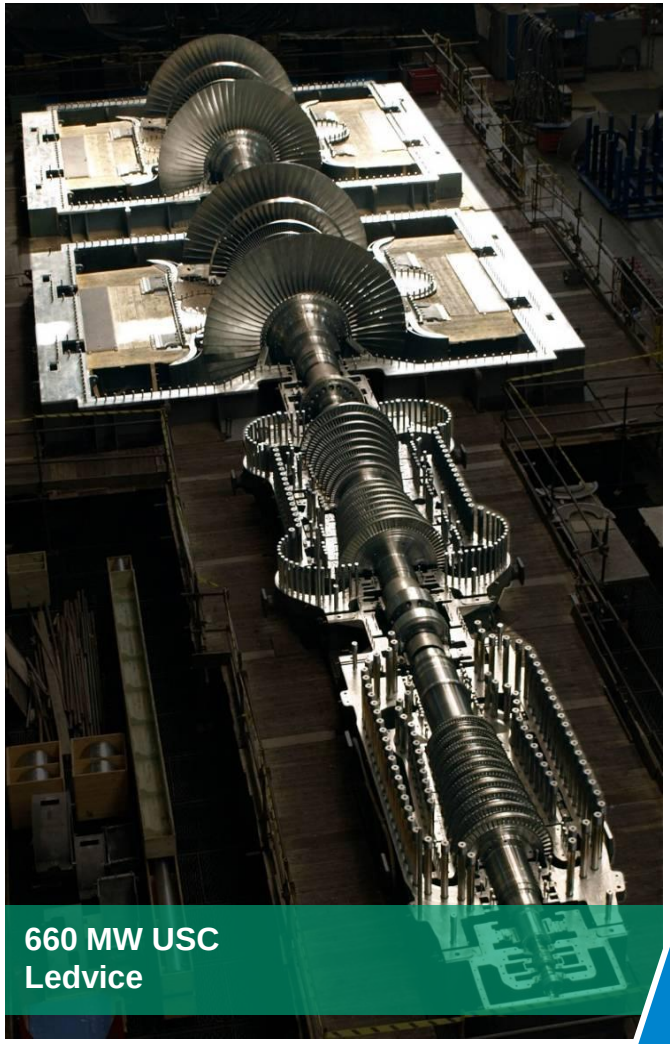

660 MW USC
Ledvice

Offshore Wind Power

Offshore wind power:

- Qualified 3 MW turbine – WinDS3000 – developed by Doosan Heavy Industries
- Creation of Development Centre in Renfrew
- 6 MW+ product under development for commercialisation by 2014
- Optimised for efficiency, quality, installation and maintenance in offshore conditions

Service

Power and Energy

- An aftermarket support business, servicing our customers' needs in the coal, oil, gas and nuclear sectors
- Providing an extensive range of overhaul and maintenance, manufacturing, testing, inspection, upgrade and life extension programs
- OEM Integrated Projects in the Power Sector
- Specialized technology solutions

Boilers

Babcock boiler technology – worldwide references

- Supercritical (hard coal, lignite) – up to 1000 MW class
- Subcritical
- Low NOx combustion systems and SCR
- Oxyfuel
- Committed to cleaner and more efficient coal powered plant

Oxyfuel test facilities, Renfrew

CLP Castle Peak D-NOx burners
4 x 680 MW sub-critical boilers

Pecem / Itaqui, Brazil
4 x 360 MW sub-critical boilers

Post-Combustion CO_2 Capture

Doosan Power Systems offers:

- Advanced amine scrubbing technology
- Partnership with the University of Regina for solvents (specialists in CO_2 capture since 1987)
- Full EPC carbon capture plant capability
- Optimisation with the full plant
- Development centre based in Renfrew with 100 engineers and scientists

Boundary Dam
Operated since 2000

Emissions Reduction Test Facility, Renfrew

Ferrybridge/CC Pilot 100+
Start of operations: November 2011

DPS scope within the DOE funded project (Award No.DE-FE-0007741)

Project Objectives and Deliverables

Objectives

- Process design and equipment sizing
- Capital and operating cost estimation
- Environmental, Health and Safety Assessment

Deliverables

- **BP1**
  - Preliminary Technical and Economic Feasibility Study
  - Preliminary equipment and consumables cost report for full scale plant
- **BP3**
  - Topical Report - Final Technical and Economic Feasibility Study
  - EH&S Risk Assessment Report
  - Project Final Report & Technical Design Documentation

Approach to Model development

1. Boiler Turbine Generator Model with Flue Gas treatment (ThermoFlex™) according to NETL Case 10 (Sub-critical PC Plant with CO_2 Capture)

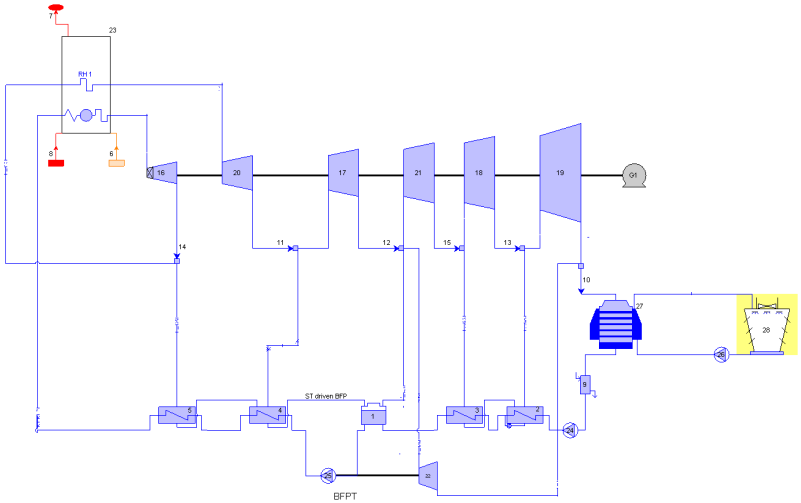

550 MWe before PCC Integration

Illustration purpose only (from ThermoFlex™)

2. PCC with compression (Aspen Plus®)

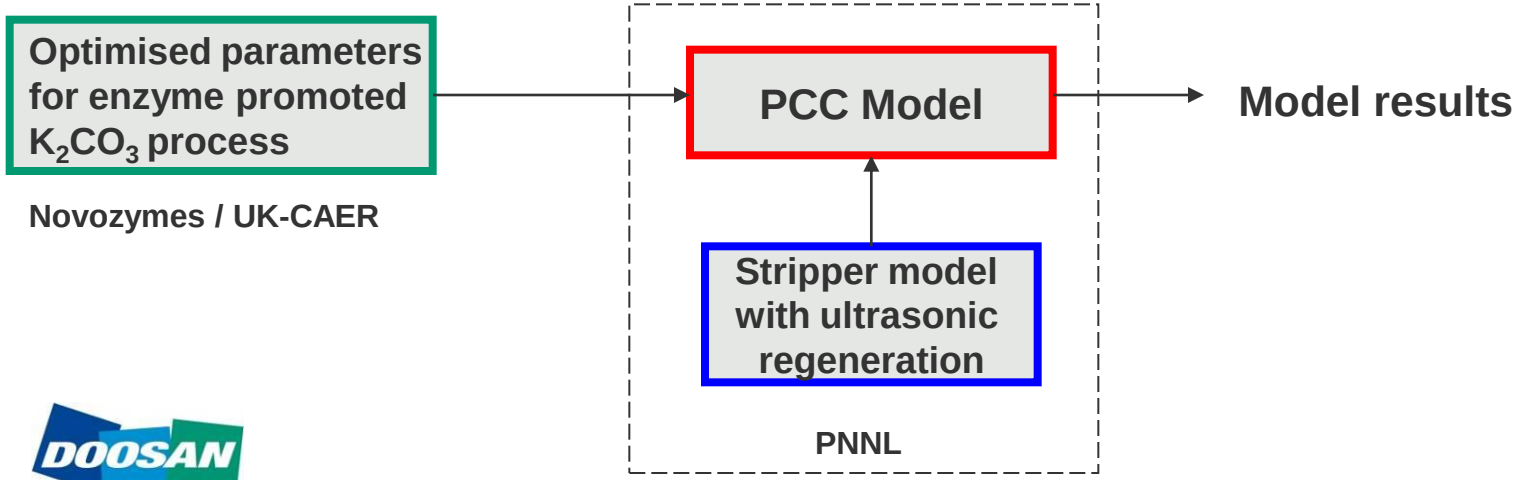

Approach to Model development

3. Revised Boiler Turbine Generator Model (ThermoFlex™) to achieve 550 MWe after integration with PCC.

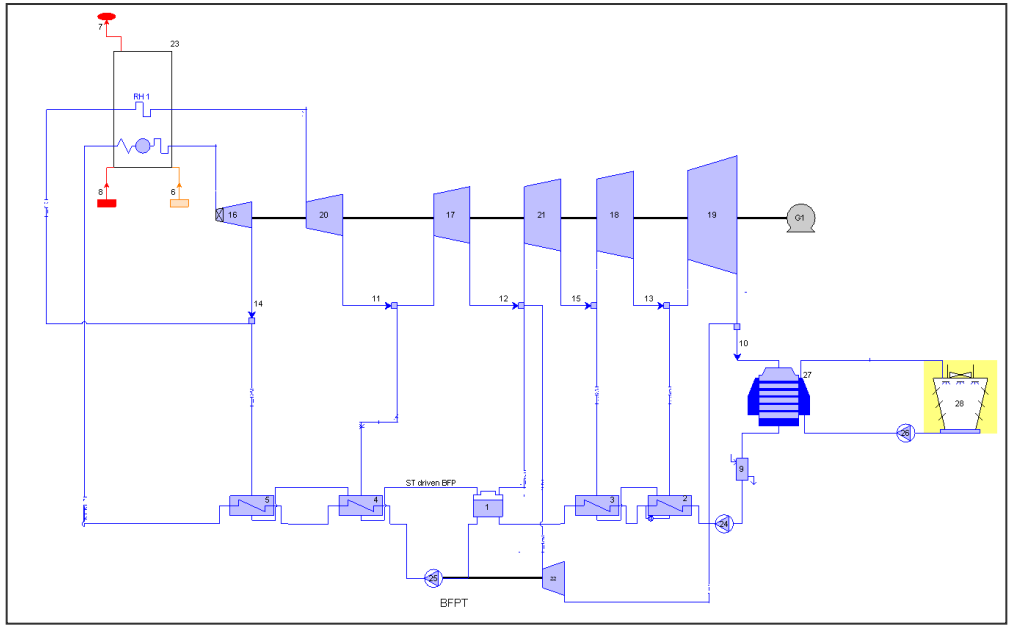

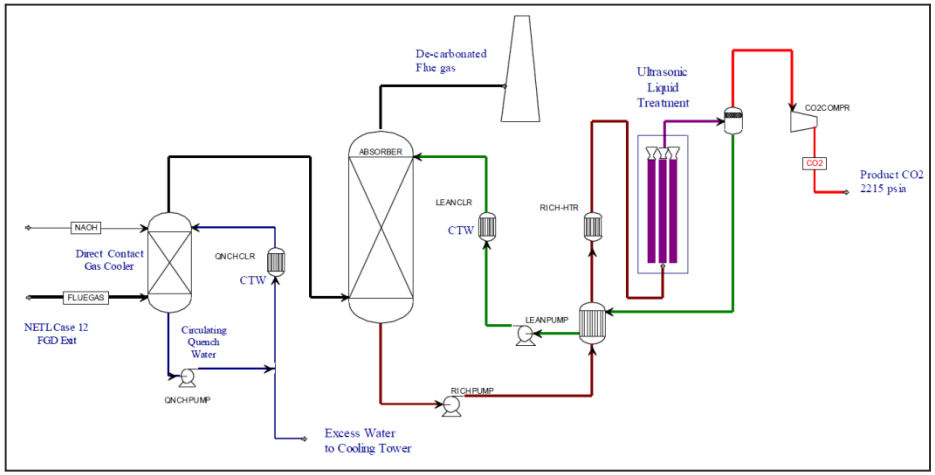

4. Perform a detailed Techno Economic Assessment of the integrated system.

THANK YOU

Disclaimer:
The contents in this presentation are for information purposes only and are not intended to be used or relied upon by the reader and are provided on the condition that you 'use it at your own risk'. Doosan Power Systems Limited does not accept any responsibility for any consequences of the use of such information.

All rights are reserved and you may not disseminate, quote or copy this presentation—written by Doosan Power Systems Limited—without its written consent.

DOOSAN

Doosan Power Systems