Project Title: **Oxygen-Fired CO_2 Recycle for Application to Direct CO_2 Capture From Coal-Fired Power Plants**	
Technology Area: Oxy-Combustion	**Technology Maturity:** Pilot, actual flue gas, 25 tonnes of CO_2/day
Primary Project Goal: Southern Research Institute (Southern Research) is designing and developing oxygen (O_2)-fired carbon dioxide (CO_2) recycle technology for retrofit application to coal-fired utility boilers.	
Technical Goals: The technical goals of this project are to: • Modify the pilot-scale Combustion Research Facility (CRF) to allow O_2-fired and CO_2-recycle operations. • Design, manufacture, and install an oxy-combustion burner specifically for the CRF. • Collect data on furnace temperatures, unburned carbon, gas composition, and flow rates into and out of the furnace. • Evaluate the effect of various parameters, including firing configuration, oxygen purity, CO_2 recycle rate, O_2 concentration, and coal type.	
Technical Content: Southern Research is developing flue-gas recycle for retrofit application to coal-fired utility boilers in order to avoid the excessive flame temperatures that are associated with O_2-firing and to maintain flow and heat-transfer requirements in the furnace and convective sections in existing plants. Southern Research will conduct the pilot-scale, oxy-combustion experiments using a modified CRF. Figure 1 contains a diagram that represents the CRF with the necessary modifications. These modifications include the addition of an O_2 storage tank and concrete pad; O_2 skid, control, and safety systems; a new burner by MAXON that is designed for O_2 combustion and CO_2 recycle; the additional ducting to allow flue-gas recirculation to the burner; and the decrease in ducting size to account for smaller flue gas flow rate.	

Project Title:

Oxygen-Fired CO_2 Recycle for Application to Direct CO_2 Capture From Coal-Fired Power Plants

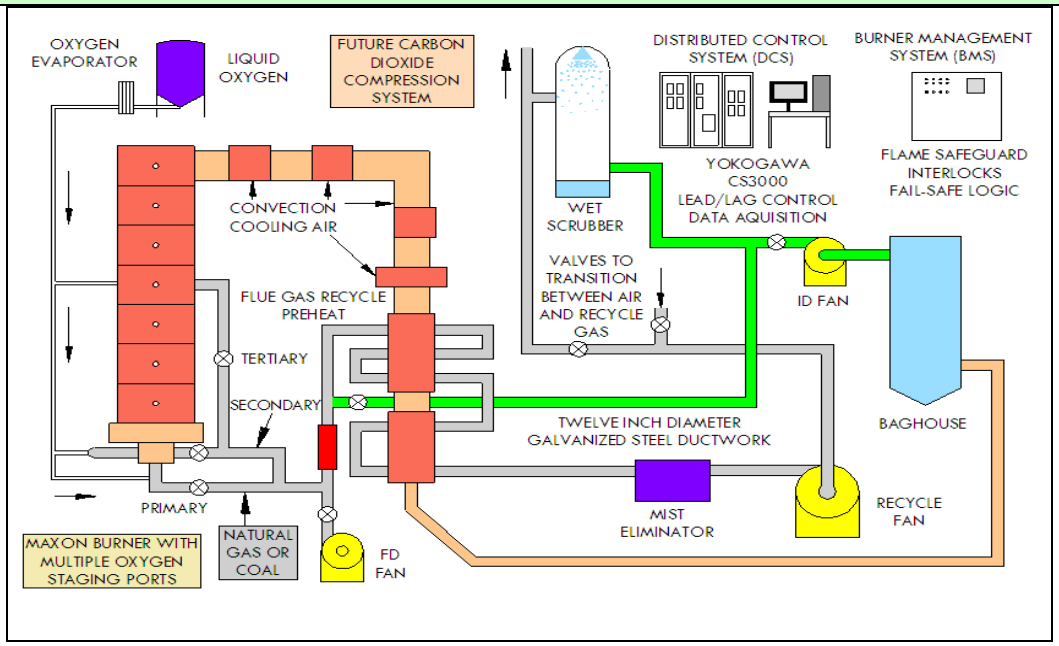

Figure 1: Diagram of the Modified CRF

The CRF will be used to investigate the effects of coal type, firing staging, percentage of flue gas recycled, and O_2 purity on oxy-combustion.

In addition to flue gas recirculation, an advanced O_2 burner developed by MAXON will be used to allow the flame shape and heat released to be controlled and to provide a stable attached flame. Figure 2 is an image of the oxy-burner being tested by MAXON that is now being used in the CRF at Southern Research.

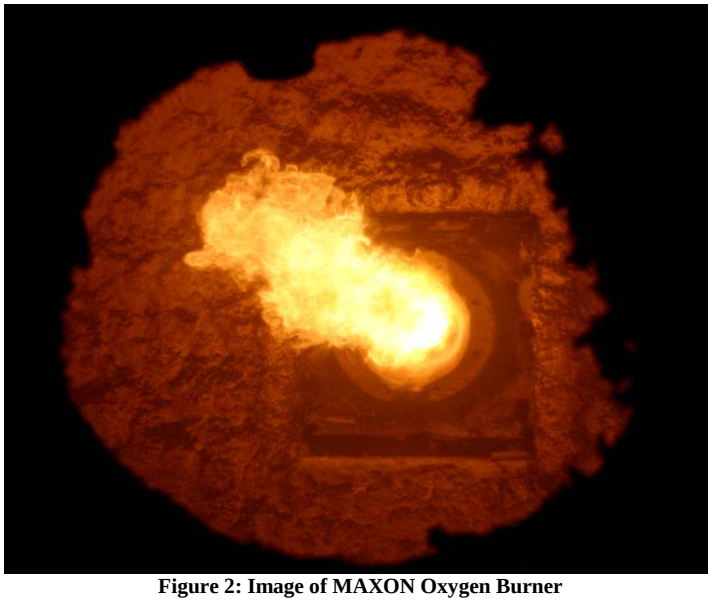

Figure 2: Image of MAXON Oxygen Burner

A preliminary test was performed on the MAXON burner using Illinois Bituminous coal. The test chamber was heated to 2,400ºF with 3% excess O_2. Performance of the burner under air-fired conditions resulted in 0.3 to 0.4 lbs nitrogen oxide (NO_X)/MMBtu. However, oxy-combustion testing resulted in 0.16 to 0.18 lbs NO_X/MMBtu.

Reaction Engineering International (REI), a project team member, also updated a computational fluid dynamic (CFD) model of the CRF facility for oxy-combustion conditions in order to predict oxy-fired burner scenarios. This model will be validated by the CRF oxy-combustion experiments and utilized for any follow on project scaleup preliminary designs.

Technology Advantages:

- Oxy-combustion burner is able to maintain a stable attached flame and can light off without natural-gas assist.
- The reduced volume flue gas produced under oxy-combustion conditions can be less expensive to purify and

Project Title:

Oxygen-Fired CO_2 Recycle for Application to Direct CO_2 Capture From Coal-Fired Power Plants

compress for carbon sequestration than conventional pulverized coal (PC) plants flue gas.

- Recycling dry flue gas through Powder River Basin (PRB) coal pulverizers eliminates concern of pulverizer fires.
- Burners and recycle rate can be tuned to achieve low-cost operation (i.e., minimize recycle) and maximum heat transfer for a given boiler type and plant configuration.
- With new plants, advanced thermodynamic cycles can recover some of the energy penalty associated with air separation.

R&D Challenges:

- Cost of retrofit for existing plants is significant.
- Energy penalty to produce O_2 is approximately 25%.
- Concern about corrosion of low-temperature ductwork and equipment.

Results To Date/Accomplishments:

- The retrofit has been completed and checked out.
- All of the ductwork, piping, valves, control systems, computers, and safety systems have been installed. The Burner management system has been installed.
- Completed the stand-alone version of the CFD model.
- Manufactured, tested, and installed the oxy-fuel burner in the 1-MW facility.

Next Steps:

- Currently constructing a modification to the system in the form of heat exchangers to cool the recycled flue gas and sulfur dioxide (SO_2) scrubber.
- Conduct flue gas recycle and oxy-combustion tests on various coals and firing configurations in the CRF facility, while altering the following factors:
  - Staging (order in which components are deployed in burner).
  - Percentage of flue gas recycled.
  - Oxygen purity.
- Compile the data from the testing and the studies done in conjunction with DTE Energy.
- Perform runs of the CFD computer model for each of the test conditions performed or scheduled.
- Final test results will not be available until the June 2010 project completion date.

Available Reports/Technical Papers/Presentations:

Southern Research Oxy-Combustion Presentation – March 2009.

Contract No.:	**NETL Project Manager:**
DE-FC26-05NT42430	Timothy Fout timothy.fout@netl.doe.gov

Project Title: **Oxygen-Fired CO_2 Recycle for Application to Direct CO_2 Capture From Coal-Fired Power Plants**	
Principal Investigator: Thomas Gale Southern Research Institute gale@sri.org	**Partners:** BOC Gases (Linde Gas) CORR Systems Doosan Babcock DTE Energy Maxon Corporation Reaction Engineering International Southern Company