Crosscutting Research & Analysis Program Water Management Research and Development Project Portfolio

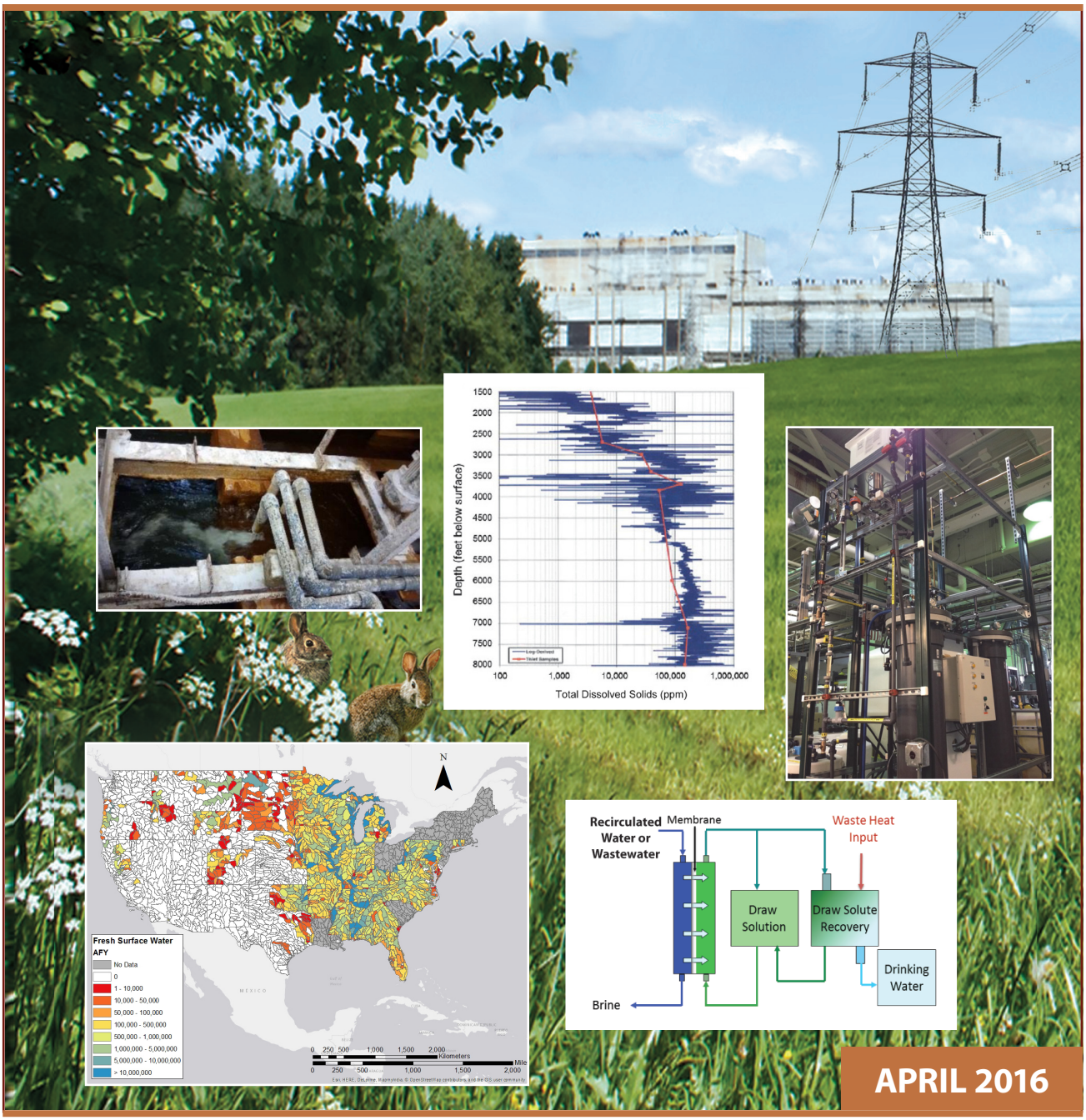

APRIL 2016

U.S. DEPARTMENT OF ENERGY | the ENERGY lab
National Energy Technology Laboratory

Disclaimer

This report was prepared as an account of work sponsored by an agency of the United States Government. Neither the United States Government nor any agency thereof, nor any of their employees, makes any warranty, express or implied, or assumes any legal liability or responsibility for the accuracy, completeness, or usefulness of any information, apparatus, product, or process disclosed, or represents that its use would not infringe privately owned rights. Reference herein to any specific commercial product, process, or service by trade name, trademark, manufacturer, or otherwise does not necessarily constitute or imply its endorsement, recommendation, or favoring by the United States Government or any agency thereof. The views and opinions of authors expressed herein do not necessarily state or reflect those of the United States Government or any agency thereof.

Contents

Introduction 5

Water Management Research and Development 7

Projects by Research Area 9

PROCESS EFFICIENCY AND HEAT UTILIZATION 10

Carnegie Mellon University — Evaluating the Techno-Economic Feasibility of Forward Osmosis Processes Utilizing Low Grade Heat: Applications in Power Plant Water, Wastewater, and Reclaimed Water Treatment 11

Gas Technology Institute (GTI) — Simultaneous Waste Heat and Water Recovery from Power Plant Flue Gases for Advanced Energy System 12

Porifera, Inc. — The COHO - Utilizing Waste Heat and Carbon Dioxide at Power Plants for Water Treatment 13

Southern Company Services, Inc. — Field Demonstration Study for Heat and Water Recovery at a Coal-Fired Power Plant 14

WATER TREATMENT AND REUSE 15

Board of Trustees of the University of Illinois — An Integrated Supercritical System for Efficient Produced Water Treatment and Power Generation 16

GE Global Research — Model-Based Extracted Water Desalination System for Carbon Sequestration 17

General Electric Company — Water Desalination Using Multi-Phase Turbo-Expander 18

LANL – Los Alamos National Laboratory — Advanced Thermally Robust Membranes for High Salinity Produced Brine Treatment via Direct Waste Heat Integration 19

NanoSonic, Inc. — Wireless Networked Sensors in Water for Heavy Metal Detection 20

NETL – Research & Innovation Center (RIC) — Separations for the Water-Energy Nexus 21

Ohio University — Advanced Integrated Technologies for Treatment and Reutilization of Impaired Water in Fossil Fuel-Based Power Plant Systems 22

Research Triangle Institute — Fouling-Resistant Membranes for Treating Concentrated Brines for Water Reuse in Advanced Energy Systems 23

Research Triangle Institute — Low-Energy Water Recovery from Subsurface Brines 24

Southern Research Institute — Treatment of Produced Water from Carbon Sequestration Sites for Water Reuse, Mineral Recovery and Carbon Utilization 25

Sporian Microsystems, Inc. — Integrated Sensors for Water Quality 26

University of Pittsburgh — Development of Membrane Distillation Technology Utilizing Waste Heat for Treatment of High Salinity Wastewaters 27

DATA MODELING AND ANALYSIS 28

SNL - Sandia National Laboratories — Exploring Energy-Water Issues in the United States 29

Abbreviations 30

Contacts 31

Acknowledgements 31

Introduction

The Crosscutting Research and Analysis Program develops a range of innovative and enabling technologies that are key to improving existing power systems and essential for accelerating the development of a new generation of highly efficient environmentally benign fossil fuel-based power systems. The mission space is focused on bridging the gap between fundamental and applied research and development (R&D) efforts. Technologies that successfully bridge this gap are intended to offer viable step-change improvements in power system efficiency, reliability, costs, and environmental impacts.

The Crosscutting Research and Analysis Program executes R&D efforts by partnering and collaborating with research institutions and the power generation industry throughout the United States and in select international locations. The Program also sponsors one of the longest running and most important university training and research programs to reinforce the research-based education of students at U.S. universities and colleges with emphasis on fossil energy science. The major objective for this program is to produce tools, techniques, and technologies that map to the Clean Coal Research Program efforts.

The Program comprises three technology areas: Coal Utilization Sciences, Plant Optimization Technologies, and University Training and Research. A general description of each of these technology areas is detailed below:

Coal Utilization Sciences: The Coal Utilization Sciences technology area research effort is conducted to develop modeling and simulation technologies leading to a suite of products capable of designing and simulating the operation of next-generation near-zero-emissions power systems such as gasification and oxy-combustion. These products are based on validated models and highly detailed representations of equipment and processes. Multinational laboratory efforts are being coordinated through the National Risk Assessment Partnership (NRAP) and Carbon Capture Simulation Initiative (CCSI) to focus on post-combustion capture of carbon, risk assessment, and integrated multiscale physics-based simulations.

Plant Optimization Technologies: The Plant Optimization Technologies technology area exists to develop advanced sensors and controls, materials, and water- and emissions-related technologies. Projects within this funding area enable novel control systems to optimize operations where harsh environmental conditions are present in both current and future applications in power plants and industrial facilities.

University Training and Research: The University Training and Research (UTR) program awards research-based educational grants to U.S. universities and colleges in areas that benefit the Office of Fossil Energy and the Crosscutting Research and Analysis Program. UTR is the umbrella program under which the University Coal Research (UCR) and Historically Black Colleges and Universities (HBCU) and Other Minority Institutions (OMI) initiatives operate. These grant programs address the scientific and technical issues key to achieving Fossil Energy's goals, and build our nation's capabilities in energy science and engineering by providing hands-on research experience to future generations of scientists and engineers.

In addition to the Crosscutting Research and Analysis Program listed above, NETL uses its participation in the U.S. Department of Energy's (DOE) Office of Science **Small Business Innovation Research (SBIR) Program** to leverage funding, enhance the research portfolio, and most importantly, facilitate a pathway to commercialization. SBIR is a highly competitive program that encourages small businesses to explore technological potential and provides the incentive to profit from commercialization. By including qualified small businesses in the nation's R&D arena, high-tech innovation is stimulated and the United States gains entrepreneurial spirit to meet specific research and

development needs. SBIR targets the entrepreneurial sector because that is where most innovation and innovators thrive. By reserving a specific percentage of Federal R&D funds for small business, SBIR protects small businesses and enables competition on the same level as larger businesses. SBIR funds the critical startup and development stages and encourages the commercialization of the technology, product, or service, which, in turn, stimulates the U.S. economy. Since its inception in 1982 as part of the Small Business Innovation Development Act, SBIR has helped thousands of small businesses compete for Federal research and development awards. These contributions have enhanced the nation's defense, protected the environment, advanced health care, and improved our ability to manage information and manipulate data.

The Crosscutting Research and Analysis Program comprises these key technology areas:

Sensors and Controls: The basis for this research area is to make available new classes of sensors and measurement tools that manage complexity; permit low cost, robust monitoring; and enable real-time optimization of fully integrated, highly efficient power-generation systems. Controls research centers on self-organizing information networks and distributed intelligence for process control and decision making.

High Performance Materials: Materials development under the Crosscutting Research and Analysis Program focuses on structural materials that will lower the cost and improve the performance of fossil-based power-generation systems. Computational tools in predictive performance, failure mechanisms, and molecular design of materials are also under development to support highly focused efforts in materials development.

Simulation-based Engineering: This technology area represents a vast amount of expertise and capability to computationally represent the full range of energy science from reactive and multiphase flows up to a full-scale virtual and interactive power plant. Science-based models of the physical phenomena occurring in fossil fuel conversion processes and development of multiscale, multi-physics simulation capabilities are just some of the tools and capabilities under this technology area.

Innovative Energy Concepts: Innovative Energy Concepts is concerned with the development of novel cost-effective technologies that promote efficiency, environmental performance, availability of advanced energy systems, and the development of computational tools that shorten development timelines of advanced energy systems. This area provides for fundamental and applied research in innovative concepts with a 10-25 year horizon that offers the potential for technical breakthroughs and step-change improvements in power generation and the removal of any environmental impacts from fossil energy-based power systems.

Water Management Research and Development: Water research encompasses the need to reduce the amount of freshwater used by power plants and to minimize any potential impacts of plant operations on water quality. The vision for this program area is to develop a 21st-century America that can count on abundant, sustainable fossil energy and water resources to achieve the flexibility, efficiency, reliability, and environmental quality essential for continued security and economic health. To accomplish this, crosscutting research is needed to lead a critical national effort directed at removing barriers to sustainable, efficient water and energy use, developing technology solutions, and enhancing understanding of the intimate relationship between energy and water resources.

Water Management Research and Development

This Project Portfolio report showcases 17 Water Management Research and Development projects within the Crosscutting Research and Analysis Program. Each project page clearly describes the technology, project goals, and anticipated overall benefits.

Water is a vital resource that is inextricably linked to our quality of life. The role water plays in generating power is well documented and national efforts are underway to minimize water demands.

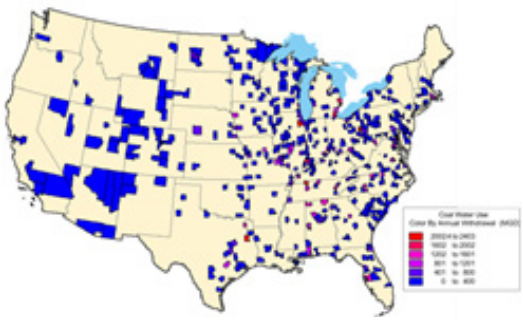

U.S. Water Withdrawal
Coal Fired Units – County Level.

In concert with the Energy-Water Nexus initiative, the Water Management Research and Development technology area focuses on reducing water use and consumption for thermoelectric power generation. Thermoelectric power generation accounts for over 40 percent of freshwater withdrawals (143 billion gallons of water per day) and over 3 percent of freshwater consumption (4 billion gallons per day) in the United States. Thermoelectric power plant water consumption is slated to increase from 3 percent (1995 USGS data) to as high as 10 percent given the expansion of closed loop cooling and cooling towers. To further exacerbate the problem, water consumption projections for the power generation sector will dramatically increase with the implementation of carbon capture technologies. As the cost associated with water consumption increases, so too will the cost of water treatment, recovery, and reuse.

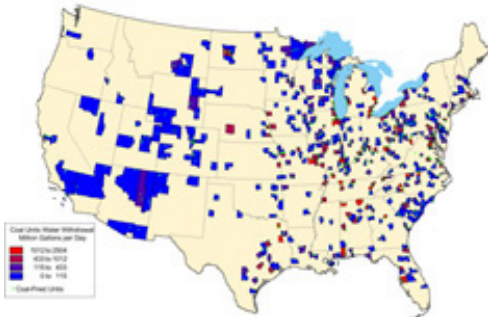

U.S. Water Consumption
Coal Fired Units – County Level.

The Crosscutting Research and Analysis Program has supported water research over the past decade. The current goal is to identify projects which will develop a range of technologies to optimize and/or reduce freshwater use for energy processes through improved waste heat recovery, alternative heat transfer fluids, and new sources of water (i.e., utilizing treated wastewater). Acquisition of these research projects is based on a comprehensive, multipronged R&D approach with a portfolio of technologies on multiple paths to enhance the probability of success of research efforts that are operating at the boundaries of current scientific understanding. The R&D covers a wide range, integrating advances and lessons learned from fundamental research, technology development, and large-scale testing. The success of this effort will enable cost-effective implementation of technologies throughout the power generation sector. These projects are being developed on 3- to 5-year timelines.

The Water Management Research and Development project portfolio is categorized into three core technologies:

Process Efficiency and Heat Utilization

Greater process efficiency and heat utilization will be needed to reduce water utilization as improvements in heat transfer technology and better thermal integration of power plant systems (particularly new plants that include carbon capture technologies) are made.

Water Treatment and Reuse

Research on water treatment and reuse is being performed to develop advanced technologies to reuse power plant cooling water and associated waste heat and to investigate methods to recover water from power plant flue gas. Considering the quantity of water withdrawn and consumed by power plants, any recovery or reuse of this water can significantly reduce the plant's water requirements. Water treatment research is focused on high dissolved solids waste streams.

Data Modeling and Analysis

Data modeling and analysis is being undertaken to improve the quality and amount of data collected, conduct comprehensive modeling efforts of complex systems, and provide crosscutting analyses to help decision-makers and support policy development. Stakeholder decision making must target qualitative and quantitative scenarios, probabilistic approaches, insights into system shocks and extremes, and improved uncertainty characterization.

Projects by Research Area

Process Efficiency and Heat Utilization

Performer	Project Title	Page
Carnegie Mellon University	Evaluating the Techno-Economic Feasibility of Forward Osmosis Processes Utilizing Low Grade Heat: Applications in Power Plant Water, Wastewater, and Reclaimed Water Treatment	11
Gas Technology Institute (GTI)	Simultaneous Waste Heat and Water Recovery from Power Plant Flue Gases for Advanced Energy System	12
Porifera, Inc.	The COHO - Utilizing Waste Heat and Carbon Dioxide at Power Plants for Water Treatment	13
Southern Company Services, Inc.	Field Demonstration Study for Heat and Water Recovery at a Coal-Fired Power Plant	14

Evaluating the Techno-Economic Feasibility of Forward Osmosis Processes Utilizing Low Grade Heat: Applications in Power Plant Water, Wastewater, and Reclaimed Water Treatment

Performer: Carnegie Mellon University

Award Number: FE0024008

Project Duration: 10/01/2014 – 09/30/2016

Total Project Value: $ 671,508

Technology Area: Plant Optimization Technologies

This project will evaluate the techno-economic feasibility and environmental benefits of low-temperature heat capture and utilization for forward osmosis (FO) water treatment at power plants. Water treatment applications that will be considered in process modeling include tertiary treatment of municipal wastewater effluent for cooling water make-up, production of ultra-high-purity water for boiler water make-up, and removal of dissolved aqueous contaminants from wastewaters generated by power plant air emissions control technologies. The first objective is to develop estimates of heat quantity, quality, and availability from U.S. power generators to 2040 in light of changes in the electricity mix and regulatory environment. The second objective is to model cost-effective, low-temperature heat recovery systems and integrate the models with FO draw solute recovery models. The third objective is to model FO water treatment processes for use in tertiary treatment of wastewater effluent for recirculating cooling water make-up, production of ultra-high-purity water for boiler water make-up, and removal of dissolved aqueous contaminants from wastewaters generated by power plant air emissions control technologies and ash ponds. The fourth objective is to demonstrate the economic feasibility and environmental benefits of recovering low-temperature heat for water treatment in the NETL model pulverized coal combustion plant and at an industry partner plant under current and projected policy scenarios for air and water emissions control.

Forward osmosis has the potential to cost-effectively capture low-grade heat that can be utilized to facilitate water treatment at power plants. The outcome of this project may be the ability to treat water streams of variable quality and flow rates, helping to meet growing water treatment needs at power plants. Deployment of FO systems is expected to enable reduced freshwater intake and decrease operational costs and environmental contaminant discharge from power plant wastewaters relative to current and future practices.

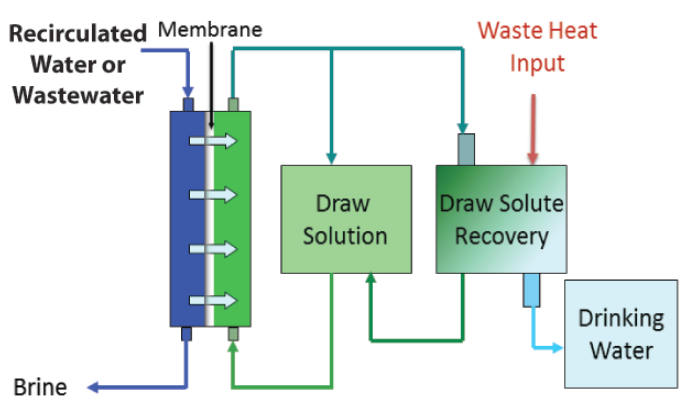

Generalized FO system design.

Simultaneous Waste Heat and Water Recovery from Power Plant Flue Gases for Advanced Energy System

Performer: Gas Technology Institute (GTI)

Award Number: FE0024092

Project Duration: 10/01/2014 – 09/30/2016

Total Project Value: $ 630,000

Technology Area: Plant Optimization Technologies

This project will offer a novel, energy-efficient approach to separate and recover flue gas moisture to replace freshwater boiler makeup, and supply other plant water n such as cooling tower makeup. The heart of this technology is a nonporous ceramic membrane device—the Transport Membrane Condenser (TMC)—developed by the Gas Technology Institute (GTI) to recover water vapor and its latent heat from boiler flue gases. In the TMC, water vapor from the flue gas condenses and passes through a permselective membrane via direct contact with low-temperature water on the permeate side, so that the transported water is recovered along with virtually all of its latent heat. The conditioned flue gas leaves the TMC at a reduced temperature and a relative humidity below saturation.

The TMC technology will be investigated and optimized for application to coal-fired power plants. Detailed approaches will be developed to reuse the high-quality water recovered in the boiler feed water circuit to replace all the fresh makeup water to save energy. The majority of the remaining recovered water can be used for other power plant processes including cooling tower water makeup, flue gas desulfurization (FGD) water makeup, and other water requirements. In tests with industrial gas-fired boilers, GTI has demonstrated up to 45% recovery of flue gas moisture, but recovery is limited by the available cooling water which, for industrial boilers, is provided by the boiler makeup freshwater. For power plants, in addition to the lower temperature turbine steam condensate, the large amount of cooling water (typically 25 times the boiler feed water flow rate) can provide a much larger driving force for the TMC, such that up to 90% moisture removal from the flue gas is possible. For a power plant equipped with a wet FGD, flue gas exiting at 160 to 180 degrees Fahrenheit (°F) and nearly 100% relative humidity contains a much larger amount of water vapor than the flue gas from an industrial gas-fired boiler. For a power plant with a dry FGD, the flue gas moisture content is still comparable to industrial gas-fired flue gas, with a dew point from 130 to 140 °F, or about 20% by volume of water vapor in the flue gas stream.

This project may offer substantial environmental and economic benefits to the power industry, especially for future advanced energy systems with much higher moisture content flue gases. U.S. plants could save 8.3 billion tons of fresh water per year with an associated cost savings of $4.3 billion. In addition, this project may increase boiler thermal efficiency by using hot water from the TMC to replace the cold boiler makeup freshwater.

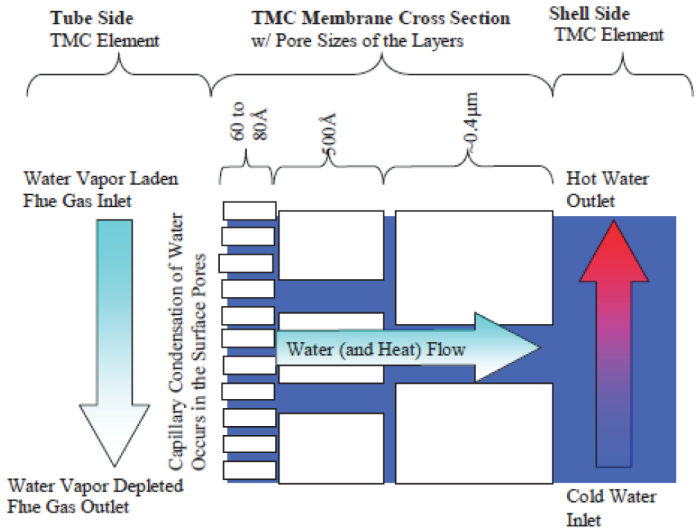

Transport Membrane Condenser (TMC) concept.

The COHO - Utilizing Waste Heat and Carbon Dioxide at Power Plants for Water Treatment

Performer: Porifera, Inc.

Collaborators: INL – Idaho National Laboratory

Award Number: FE0024057

Project Duration: 10/01/2014 – 09/30/2016

Total Project Value: $ 500,750

Technology Area: Plant Optimization Technologies

This project will enable the development of a water treatment system—the COHO—powered by low-grade heat and carbon dioxide at power plants. COHO combines the high-performance of a novel forward osmosis (FO) membrane in combination with a carbon dioxide-based switchable draw. The FO technology excels in processing difficult-to-treat waters, such as blowdown waters created by power plants. Porifera's novel FO membrane has higher flux and reduced reverse salt flux compared to conventional membranes. It is more chemically stable, enabling the development of a system that uses a draw solute that can capture carbon dioxide from flue gas. For this project, Porifera will collaborate with Idaho National Laboratory, the developers of a switchable draw solute that can obtain high osmotic pressure and is recyclable for reuse within the system. Porifera and Idaho National Laboratory will design, build, and optimize the COHO and determine the economic viability of the system at power plants.

The goals of the project are to first optimize the system process, including carbon dioxide and water processing, as well as the draw chemistry. The team will then build, operate, and test their bench-scale system. The Porifera project will develop a techno-economic model of COHO and determine its feasibility for scale-up and installation at a power plant.

The expected result of this project is a model demonstrating that installation of COHO at a power plant will (1) reduce the volume of wastewater, (2) expand the capabilities of water treatment and provide additional water streams, (3) facilitate carbon dioxide capture from flue gas as part of the water treatment process, and (4) use waste heat to reduce the energy costs of treating wastewater.

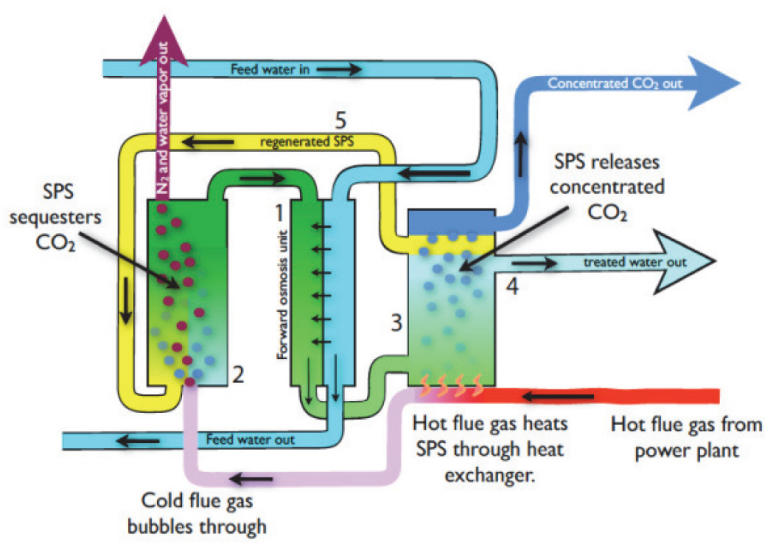

Schematic of COHO draw phase switching.

Field Demonstration Study for Heat and Water Recovery at a Coal-Fired Power Plant

Performer: Southern Company Services, Inc

Collaborators: Electric Power Research Institute (EPRI), URS Group

Award Number: FE0024085

Project Duration: 10/01/2014 – 04/30/2016

Total Project Value: $ 422,144

Technology Area: Plant Optimization Technologies

The objective of this project is to conduct an engineering study as a prelude to a field demonstration of how low-grade waste heat can be used to reduce water usage rates and improve system efficiency in a coal-fired power plant. A commercial system combining low-grade heat-recovery technologies and end uses to cost-effectively improve efficiency and reduce water consumption has not yet been developed. Work done during this project will facilitate the next step toward accomplishing that goal.

The key objectives are to (1) establish the relationships required to enable a field demonstration of a low-temperature heat-recovery/use system designed to meet the needs of coal-fired power plants; (2) compare the capabilities of commercially available and novel heat-recovery technologies to the heat/temperature requirements of various heat-use options—the project team will identify combinations of heat-recovery/use technologies that match up well for heat and temperature profiles, enabling identification of near-term opportunities for utilities to use waste heat; (3) compare the costs and benefits of emerging heat-recovery technologies with commercially-available technologies for the recovery of heat from low-temperature flue gas—the project team will quantify the value of potential improvements in heat-recovery technologies with respect to the cost of the technology, potential increased benefits by expanding the availability of heat-uses that can be coupled with them, and potential water savings in terms of amount of water per unit of power produced; and (4) recommend a combined process to be field tested at a Southern Company plant. The engineering analysis conducted during the project will provide the conceptual design and indicative cost estimate for the field demonstration project.

This project may lead to a developmental breakthrough in water management for coal-fired power plants. The technologies developed, paired with the economic justification, may result in a pilot-scale field demonstration at a full-scale power plant. Interactions with the utility industry and its research and engineering partners will enable technology vendors to gain a better understanding of the requirements for operating coal power generators, while utilities will gain a better understanding of the near-term opportunities for viable heat-recovery/use technologies.

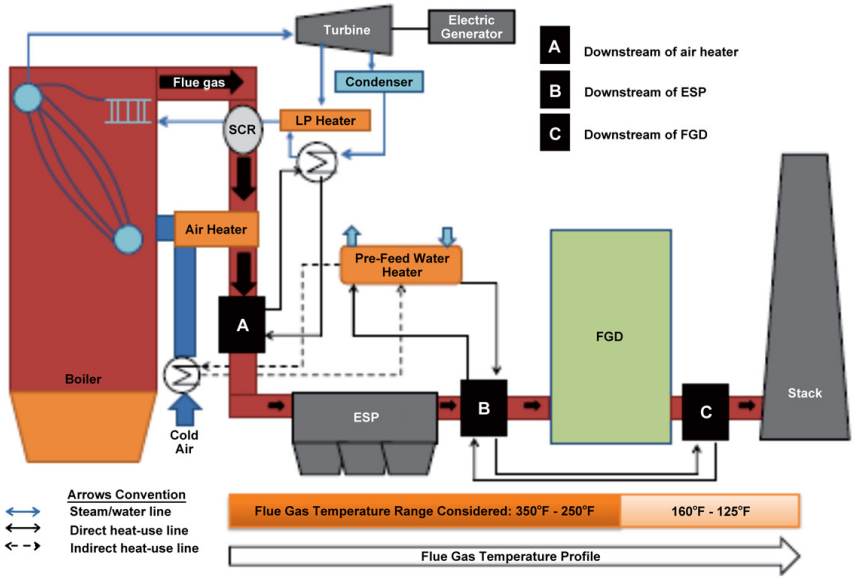

Example of heat-recovery and heat-use in a coal-fired power plant. The black boxes (A,B,C) represent potential waste-heat sources.

Water Treatment and Reuse

Performer	Project Title	Page
Board of Trustees of the University of Illinois	An Integrated Supercritical System for Efficient Produced Water Treatment and Power Generation	16
GE Global Research	Model-Based Extracted Water Desalination System for Carbon Sequestration	17
General Electric Company	Water Desalination Using Multi-Phase Turbo-Expander	18
LANL – Los Alamos National Laboratory	Advanced Thermally Robust Membranes for High Salinity Produced Brine Treatment via Direct Waste Heat Integration	19
NanoSonic, Inc.	Wireless Networked Sensors in Water for Heavy Metal Detection	20
NETL – Research & Innovation Center (RIC)	Separations for the Water-Energy Nexus	21
Ohio University	Advanced Integrated Technologies for Treatment and Reutilization of Impaired Water in Fossil Fuel-Based Power Plant Systems	22
Research Triangle Institute	Fouling-Resistant Membranes for Treating Concentrated Brines for Water Reuse in Advanced Energy Systems	23
Research Triangle Institute	Low-Energy Water Recovery from Subsurface Brines	24
Southern Research Institute	Treatment of Produced Water from Carbon Sequestration Sites for Water Reuse, Mineral Recovery and Carbon Utilization	25
Sporian Microsystems, Inc.	Integrated Sensors for Water Quality	26
University of Pittsburgh	Development of Membrane Distillation Technology Utilizing Waste Heat for Treatment of High Salinity Wastewaters	27

An Integrated Supercritical System for Efficient Produced Water Treatment and Power Generation

Performer: Board of Trustees of the University of Illinois

Collaborators: Midwest Geological Sequestration Consortium (MGSC), Illinois Clean Coal Institute (ICCI), Podolsky Oil Company, and Pioneer Oil Company.

Award Number: FE0024015

Project Duration: 01/01/2015 – 12/31/2016

Total Project Value: $ 656,311

Technology Area: Plant Optimization Technologies

The goal of this project is to evaluate the feasibility of an innovative, integrated supercritical cogeneration system for cost-effective treatment of produced waters resulting from carbon dioxide (CO_2) sequestration, oilfields, and coal-bed methane recovery. Methane or coal is used as an energy source to drive the proposed system that generates both electricity and pure water. Project tasks include process simulation, thermodynamic analysis, and techno-economic evaluation of the integrated system; design and assembly of supercritical salt precipitation and membrane distillation systems; development and characterization of advanced carbon membranes for supercritical membrane distillation; and desalination and purification of different produced water samples with salt concentrations of 30,000 ppm (mg/L) to 200,000 ppm.

This project may provide a transformative approach to generating power from coal or natural gas, purifying high salinity saline or produced water, and recovering valuable, strategic minerals in a zero liquid discharge plant. Produced water is expected be treated at a much lower cost due to the higher efficiency of the proposed supercritical integrated system compared to existing cogeneration or evaporation/crystallization systems.

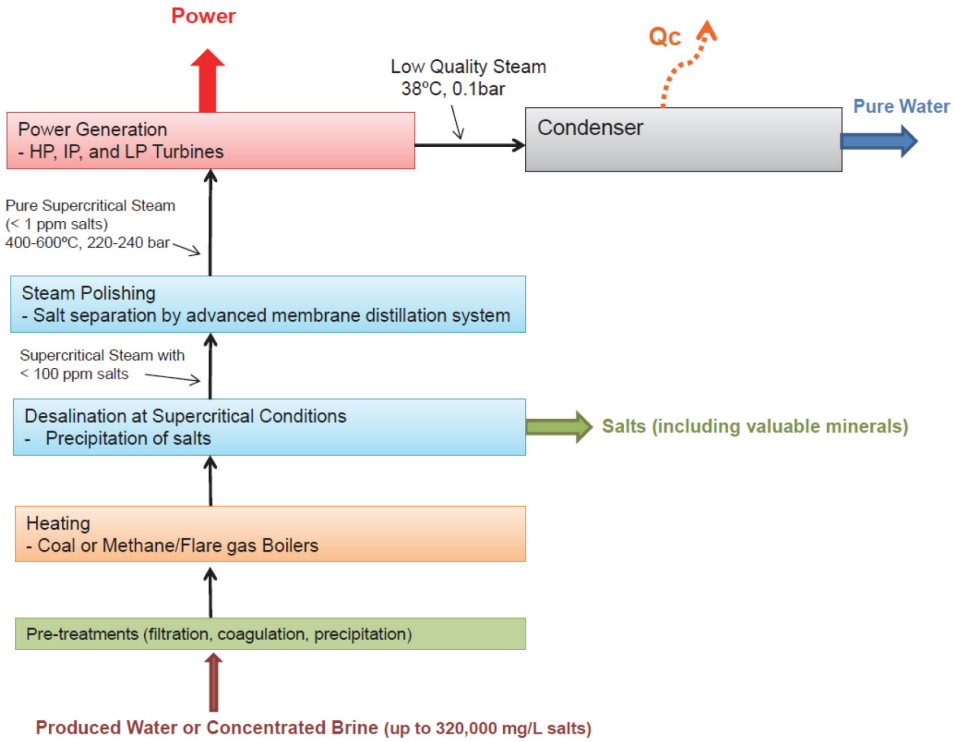

Conceptual diagram of the proposed supercritical produced water desalination and energy generation system.

Model-Based Extracted Water Desalination System for Carbon Sequestration

Performer: GE Global Research

Collaborator: Pennsylvania State University (PSU)

Award Number: FE0026308

Project Duration: 09/01/2015 – 02/28/2017

Total Project Value: $ 1,004,453

Technology Area: Plant Optimization Technologies

The objective of this project is to leverage new technology to develop a cost-effective process for recovering clean water from high salinity extracted formation water. Deep saline formations have significant potential for long-term carbon sequestration as supercritical CO_2. However, many formations will require water to be extracted for pressure management and CO_2 plume control, which will generate substantial quantities of high-salinity brine that will need to be disposed of in an environmentally and economically responsible manner.

The project objectives are as follows: (1) define a scalable, multi-stage extracted water desalination system that yields clean water, concentrated brine and, optionally, salt from saline brines (180,000 parts per million total dissolved solids [TDS]) and that meets a cost target; (2) validate the overall system performance with field-sourced water using GE pre-pilot and lab facilities; and (3) define the scope of and identify a team and test location for pilot-scale implementation of the desaliation system.

Successful execution of this project has the potential to dramatically increase the capacity of deep saline formations for CO_2 storage with minimal cost impact. This project will also serve as a basis for pilot validation of new, low-cost water pretreatment and desalination technologies.

GE's produced water pre-pilot pretreatment facility.

Water Desalination Using Multi-Phase Turbo-Expander

Performer: General Electric Company

Award Number: FE0024022

Project Duration: 01/01/2015 – 06/30/2016

Total Project Value: $ 614,925

Technology Area: Plant Optimization Technologies

The goals of this project are to establish the technical and economic feasibility of the multi-phase turbo-expander-based water desalination process. The main objective is to develop a novel brine freeze desalination process based on brine cooling via expansion of a compressed air/brine stream in a turbo-expander. Ice crystals, formed after water in brine freezes, are separated from salt crystals. The proposed innovative approach to cool the brine droplets by expanding cold air results in very efficient heat transfer between the cooling media (air) and the brine, reducing process power requirements. Since the presence of liquids is not essential to heat transfer in expanding air, water recovery in the process has the potential to be close to 100%. The key component of the proposed process is an expander capable of working with three phases of the expanding fluid: air, liquid (concentrated brine), and solid (ice and salt crystals). The project consists of four modeling tasks and one experimental task that will establish process design, develop tools for use in designing the expander, and investigate process economics. The experimental task will provide data needed for calibrating the design tools and demonstrate technology feasibility.

Successful completion of this project could reduce treatment costs of high-salinity water by at least 20% compared to thermal evaporation. This process may have fewer corrosion problems than thermal evaporation and use less-expensive materials. Furthermore, the developed process will be well suited for mobile applications.

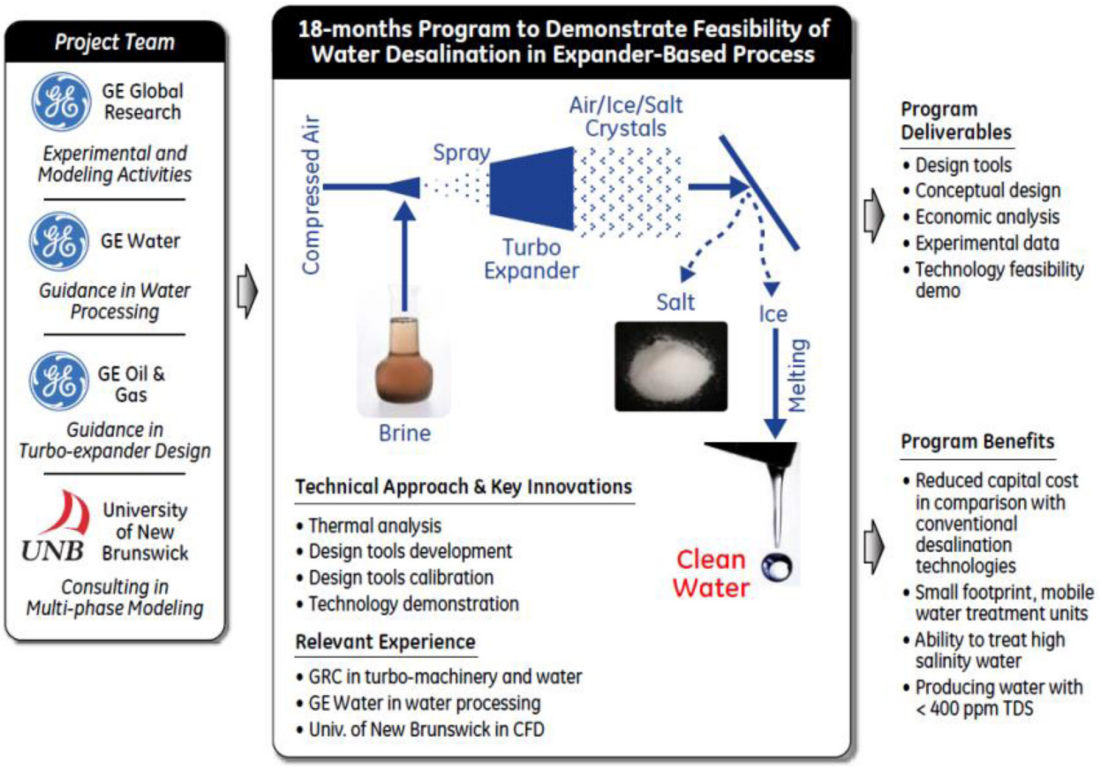

Summary of the proposed Water Desalination Using Multi-Phase Turbo-Expander project.

Advanced Thermally Robust Membranes for High Salinity Produced Brine Treatment via Direct Waste Heat Integration

Performer: LANL – Los Alamos National Laboratory

Award Number: FWP-FE-663-15-FY-16

Project Duration: 02/01/2016 – 09/30/2016

Total Project Value: $ 250,000

Technology Area: Plant Optimization Technologies

This project will develop and evaluate a polymeric membrane that can withstand high temperature, high salt concentration, and the presence of oxygen for use with hot, waste-gas streams as a membrane sweep within the "hot gas sweep membrane brine separation" (HGSMBS) process for high salinity brine treatment. The developed membrane process will enable water removal from the brine stream, thereby concentrating the brine and reducing its volume for re-injection or disposal. The water vapor in the gas sweep stream can either be exhausted into the environment or utilized in a subsequent unit operation. The membrane technology would reduce brine disposal costs while increasing power production opportunities by co-utilization of waste heat and water derived from these high salinity brines via membrane distillation for power production.

Managing and extracting value from the large quantities of produced waters from operations including CO_2-storage, oil/gas development, and geothermal reservoirs poses major technical, economic, and environmental challenges. Produced/geothermal water resources are typically characterized as low temperature (< 90 °C), moderate temperature (90–150 °C), and high temperature (> 150 °C) with power being typically derived from those sources in the higher temperature range. These water resources have total dissolved solids (TDS) concentrations ranging from that of seawater (TDS < 40,000 mg/L) to concentrations in excess of 300,000 mg/L with the common range for reuse/concentration targeted here ranging from 40,000 to 150,000 mg/L. The temperatures and TDS characteristics of the produced waters from these sources span broad ranges that lead to a significantly more challenging separations problems than those encountered in non-produced water desalination applications (e.g., sea and brackish waters).

Whereas reverse osmosis (RO) is currently the most energy efficient technology for desalination, it is inherently limited to lower salinity brines such as those encountered in sea water treatment. Current commercial technologies for treating high salinity brine streams for reuse applications, (e.g., evaporative crystallization and mechanical vapor compression) are often considered too costly and energy inefficient to warrant their use. Successful development of novel polymeric membranes that could be utilized in the HGSMBS separation process would yield significant techno-economic and environmental benefits across the numerous arenas in which these produced waters are encountered.

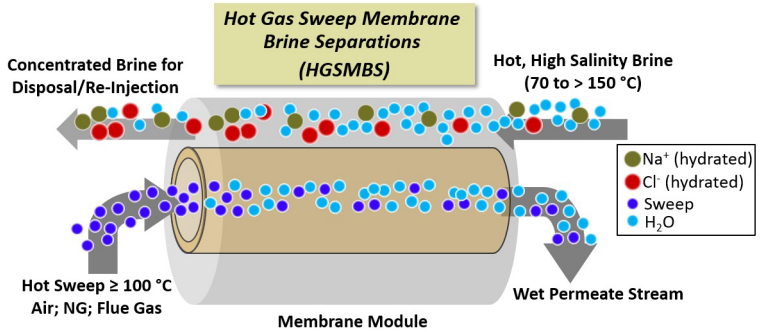

Conceptual depiction of the HGSMBS process for hot high salinity geothermal brine treatment using a hot gas sweep aimed at utilizing waste heat and water from brine.

Wireless Networked Sensors in Water for Heavy Metal Detection

Performer: NanoSonic, Inc.

Collaborators: Virginia Tech

Award Number: SC0013811

Project Duration: 06/08/2015 – 03/07/2016

Total Project Value: $ 150,000

Technology Area: Plant Optimization Technologies

The overall goals of this project are to develop wireless networked sensors using conformal nanomembrane-based (NM-based) chemical field effect transistors (ChemFETs) to detect heavy metals in water and to combine the advanced nanotechnology thin film deposition process—Electrostatic Self-Assembly—and conformal nanomembrane ChemFET technology to produce a wireless sensor network for in situ environmental monitoring.

To achieve these goals, the project will (1) develop an improved understanding of the operation of NM ChemFET sensors through engineering analysis, modeling, and direct side-by-side experimental comparison with commercial chemical sensors; (2) further design polymer and semiconductor chemistries to improve sensor sensitivity, selectivity, and re-usability; (3) integrate wireless ChemFET sensors on a unmanned aerial vehicle platform (as a transceiver) to demonstrate small size, low power consumption, and energy harvesting feasibility; and (4) characterize improved NM ChemFET sensors using NanoSonic facilities and equipment available at Virginia Tech.

The successful completion of this project could enable efficient monitoring of heavy metals for environmental surveillance in water, locate pollution sources via analysis from concentration gradients, and detect and map chemical concentrations that are potentially harmful to people and/or destructive to agriculture.

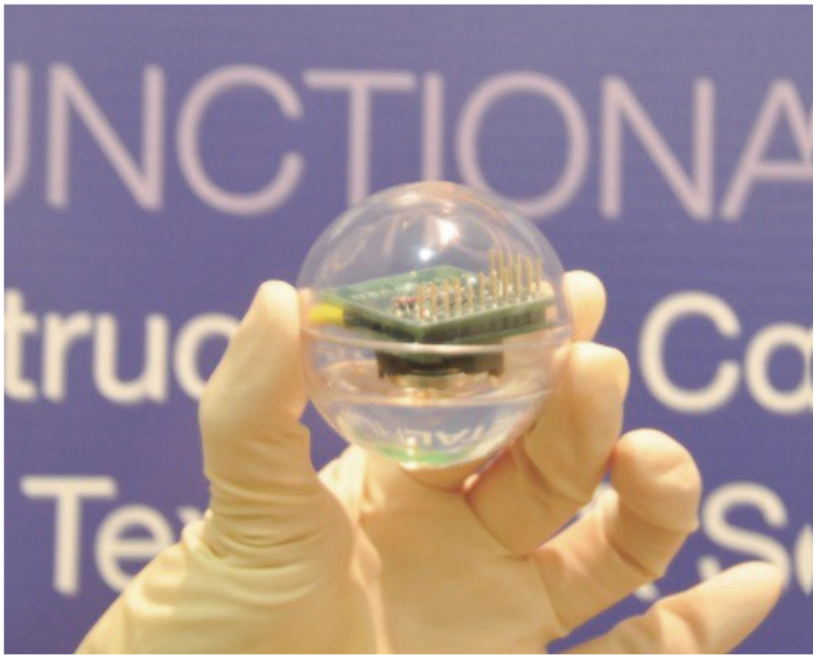

Wireless Sensor Node.

Separations for the Water-Energy Nexus

Performer: NETL – Research & Innovation Center (RIC)

Award Number: IPT_FY16: Task 6.0

Project Duration: 10/01/2015 – 09/30/2016

Total Project Value: $ 429,353

Technology Area: Plant Optimization Technologies

Work under the IPT (Innovative Process Technologies) project supports the Department of Energy (DOE) Strategic Objective to "Advance the goals and objectives in the President's Climate Action Plan by supporting prudent development, deployment, and efficient use of 'all of the above' energy resources that also create new jobs and industries," particularly by improving energy productivity by increasing efficiency, and by advancing options for diverse energy resources and conversion devices for power. The overall IPT project spans seven tasks, each focused on a different research area.

The objective of this task (task 6) is to develop technology to purify high salinity brines produced during oil/gas development, during CO_2 storage, or from geothermal reservoirs. The following work items will be completed during the course of this task, which ends in 2020: (1) literature review of state-of-the-art research and development (R&D) as well as commercially-available technologies for desalinating high concentration brines; (2) development of laboratory testing capability at NETL-RIC for high salinity brine separation; (3) research guidance for experimental testing at Los Alamos National Laboratory (LANL); and (4) conduct a techno-economic analysis of the pervaporation membrane process and compare the cost of separation against competing technologies using experimental data collected at LANL.

The goal of the research in FY16 is to develop a literature review of both commercial and state-of-the-art R&D technologies to generate fresh water from high concentration brines produced during oil/gas development and CO_2 sequestration in saline aquifers. As part of the literature review, estimated electrical and financial costs to generate fresh water from high-concentration brines as a function of inlet and outlet salt concentration will be determined. The capability to measure permeability and selectivity of membranes for high salinity brine separation will be developed at NETL-RIC. In addition, as part of the literature review, the team will determine/develop which separation technology to experimentally test in the new water-brine separation laboratory under construction at NETL-RIC.

Advanced Integrated Technologies for Treatment and Reutilization of Impaired Water in Fossil Fuel-Based Power Plant Systems

Performer: Ohio University

Collaborators: West Virginia University, American Electric Power

Award Number: FE0026315

Project Duration: 09/01/2015 – 02/28/2017

Total Project Value: $ 937,500

Technology Area: Plant Optimization Technologies

The objective of this project is to validate the technical/commercial promise of an advanced multi-stage process for treating and reutilizing impaired water as make-up water in fossil fuel-based power plants through small-scale testing and prepare the technology for a future pilot-scale test effort. This process is based on an advanced multi-stage treatment process, which utilizes commercial solids filtering and ultra-violet light treatment to remediate bacteria, a low-cost natural zeolite to remove naturally occurring radioactive material (NORM) found in oil/gas-based impaired water, electrochemical stripping (E-stripping) and selective sulfation to remove minor constituents, and a breakthrough supercritical water unit design, which utilizes internal Joule-based heating to remove major constituents and hydrocarbons.

Both U.S. energy and economic security rely on fossil fuel-based power plants having access to suitably clean water. To address the competing societal and industry demands for available water and the effects of climate change, new water sources for these power plants are necessary to reduce their existing water-supply stress. In the near future, the U.S. is projected to generate significant quantities of impaired water from carbon dioxide (CO_2) storage, along with impaired water from existing oil and natural gas (oil/gas) production. As such, these impaired water sources represent a potential water supply for fossil fuel-based power plants. However, the impaired water resources contain a host of components including suspended solids, dissolved solids or salts and, in the case of oil/gas sources, may also contain hydrocarbons and NORM.

The impaired water treatment process developed under this project could be used to recover up to 95% of benefically resusable water from impaired water and reduce water treatment costs. Further, it could meet the goal of developing a deployable processes to cost-effectively treat 500 gallons per minute of impaired water from CO_2 storage or oil/gas operations to supplement make-up water used in power plant systems.

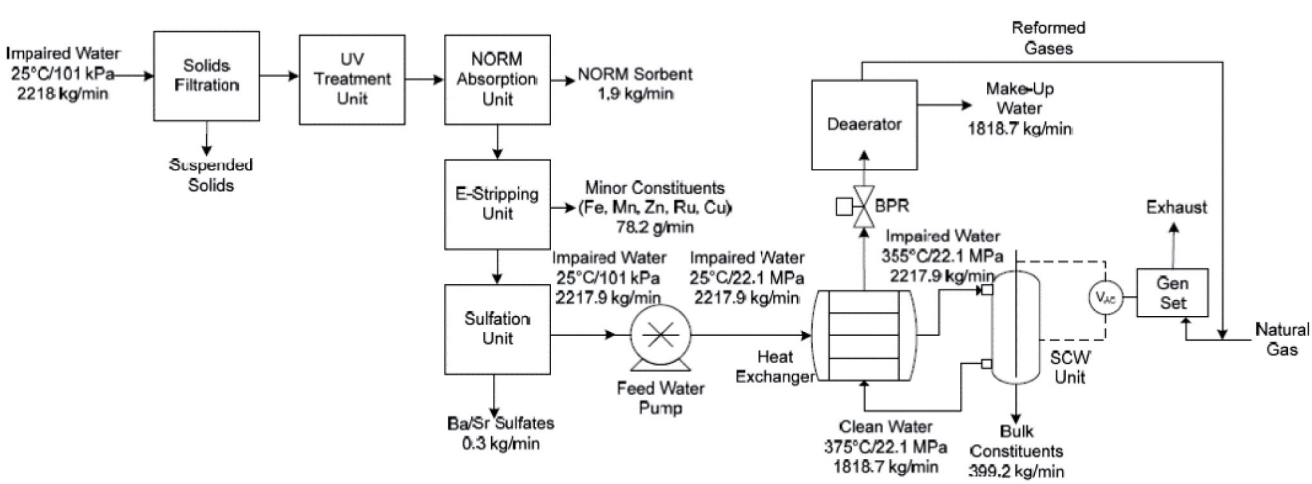

Schematic of Impaired Water Treatment Process.

Fouling-Resistant Membranes for Treating Concentrated Brines for Water Reuse in Advanced Energy Systems

Performer: Research Triangle Institute

Collaborators: University of California at Riverside, Veolia Water

Award Number: FE0024074

Project Duration: 10/01/2014 – 09/30/2016

Total Project Value: $ 625,000

Technology Area: Plant Optimization Technologies

The overall project objective is to demonstrate the efficacy of membrane distillation (MD) as a cost-savings technology to treat concentrated brines (such as, but not limited to, produced waters generated from fossil fuel extraction) that have high levels of total dissolved solids (TDS) for beneficial reuse in power production and other industrial operations as well as for agricultural and municipal water uses. In addition, a novel fouling-resistant nanocomposite membrane will be developed to reduce the need for chemicals to address membrane scaling due to the precipitation of divalent ions in high-TDS waters and improve overall MD performance via an electrically conductive membrane distillation (ECMD) process. This anti-fouling membrane technology platform is based on incorporating carbon nanotubes (CNTs) into the surface layer of existing, commercially available MD membranes. The CNTs confer electric conductivity to the membrane surface so that an electric potential can be applied to remove and prevent membrane scaling and fouling.

Specific technical objectives are the (1) demonstration of MD to recover at least 50% of wastewater with concentrations of up to 180,000 mg/L TDS; (2) development of ECMD membranes having improved fouling resistance as demonstrated by limiting the decline in flux over time to about 20% when compared to the relative flux of a non-conductive membrane during the treatment of highly scaling water; (3) development of an experimentally validated model that can predict the separation performance achievable with the new conductive membranes; (4) preliminary design of a full-scale ECMD module; and (5) preliminary techno-economic analysis of an MD-based water treatment processes utilizing the ECMD membranes.

The expected benefits of this project include at least a 50% reuse of treated effluent for produced water at 180,000 mg/L, an 80% reduction in water management costs when compared to deep well injection costs, a 35% to > 90% reduction in costs associated with water treatment/disposal, and improvements in membrane fouling relative to existing membranes.

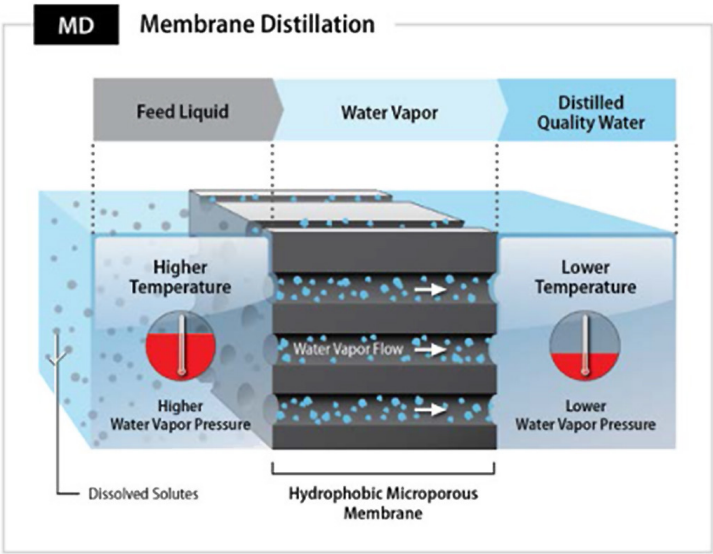

Illustration showing the MD process. Water evaporates in the feed and is transported through the hydrophobic membrane leaving the non-volatile solutes behind and generating high quality product water.

Low-Energy Water Recovery from Subsurface Brines

Performer: Research Triangle Institute

Award Number: FE0026212

Project Duration: 09/01/2015 – 02/28/2017

Total Project Value: $ 937,500

Technology Area: Plant Optimization Technologies

The objective of this project is to develop and demonstrate bench-scale feasibility of a low-cost, low-energy water treatment process using non-aqueous solvents (NAS) for the economical extraction of clean water from high-total dissolved solids (TDS) brines. TDS is a measure of the amount of dissolved matter in water and a reflection of the salinity; the energy required for separation increases with salinity. The high TDS levels in concentrated brines generated from CO_2 subsurface storage and fossil fuel extraction (often eight times higher than those of seawater) make the current state-of-the art approaches to water treatment/disposal such as reverse osmosis (RO) untenable. Specific project objectives are to identify candidate solvents that can absorb water under one condition and release it under better conditions; test different solvents and/or mixtures of solvents for optimum water uptake and release to maximize water recovery from 180,000 parts per million TDS brine; develop optimum conditions to maximize the kinetics of the process; test water quality and, if necessary, develop a downstream process to satisfy potable water standards; and develop strategies to optimize the overall process and perform a techno-economic assessment for scale-up.

This water extraction technology approach addresses the two major challenges associated with treating this type of water: (1) the NAS can be used to treat water with very high TDS content and (2) the novel solvent method can be applied at large scale and low cost and energy. The successful development of this approach will provide a comprehensive solution to the water management issues encountered in high-TDS brine treatment, advnacing expanded water reuse and discharge options beyond those that are currently feasible. This solvent technology will conserve precious water resources and reduce the environmental impact of concentrated brines. Some other anticipated benefits of the proposed technology include low energy costs, low capital expenditure costs, high-quality effluent, and easy scale-up.

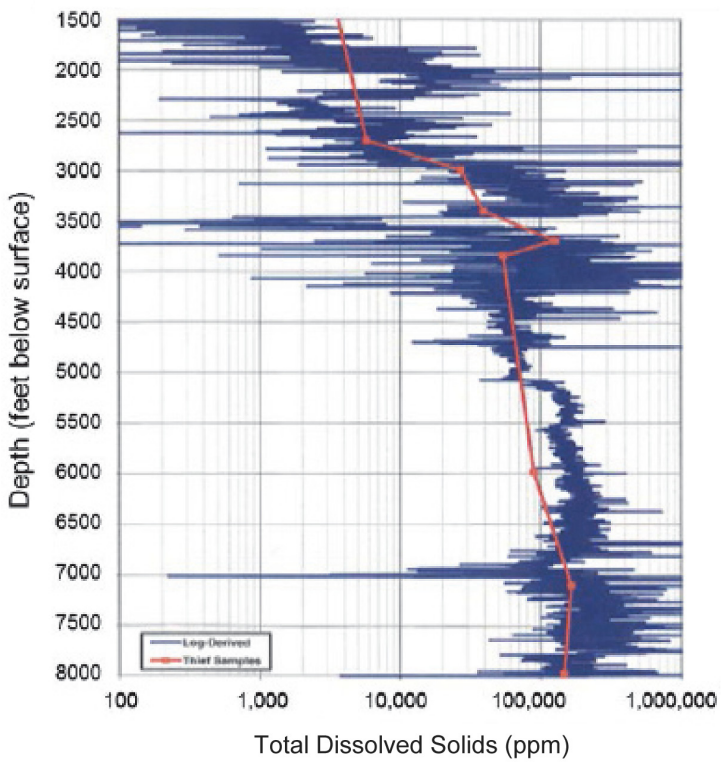

Subsurface plot showing the increasing TDS concentration in water with depth at a possible CO_2 storage site.

Treatment of Treatment of Produced Water from Carbon Sequestration Sites for Water Reuse, Mineral Recovery and Carbon Utilization

Performer: Southern Research Institute

Collaborators: Advanced Resources International Inc., Heartland Technology Partners LLC, New Logic Research, Southern Company Services, Electric Power Research Institute (EPRI), and DiFlippo Consulting

Award Number: FE0024084

Project Duration: 10/01/2014 – 09/30/2016

Total Project Value: $ 653,686

Technology Area: Plant Optimization Technologies

The primary project objectives are to (1) select four representative CO_2 sequestration reservoirs based on water varying chemical and geologic properties; (2) develop an integrated and adaptable concentration system; (3) develop solidification and stabilization (S/S) mixtures to immobilize residual contaminants; (4) evaluate opportunities to recover strategic and rare earth minerals (SREMs) and efficiently utilize CO_2 and produced water; and (5) complete a technical readiness review, economic feasibility analysis, and environmental risk assessment. The produced water volume and characteristics necessary to facilitate the injection of 3.5 million tons per year (TPY) of CO_2 will be used for the mass and energy calculations and to determine long-term viability.

Early project work by Advanced Resources International led to the selection of the Tuscaloosa, Mount Simon, Sulphur Point & Keg River and the Wasson Field formations for use in geochemical characterizations. The four formations provide concentrations ranging from 35,000-190,000 mg/L TDS, 4,851-63,014 mg/L Na and 200-19,000 mg/L Mg. The varied geochemistry will require a wide range of design considerations that must be addressed to optimize the use of low-temperature membrane treatment versus thermal concentration techniques.

Current project activities are focused on balancing the efficient treatment of low-to-medium TDS streams utilizing the New Logic Research VSEP process with the Heartland Technology Partner's thermal concentrator, which is very effective on high to very high TDS streams. Recent results indicate that an integrated approach has the potential to provide technically and economically feasible treatment solutions.

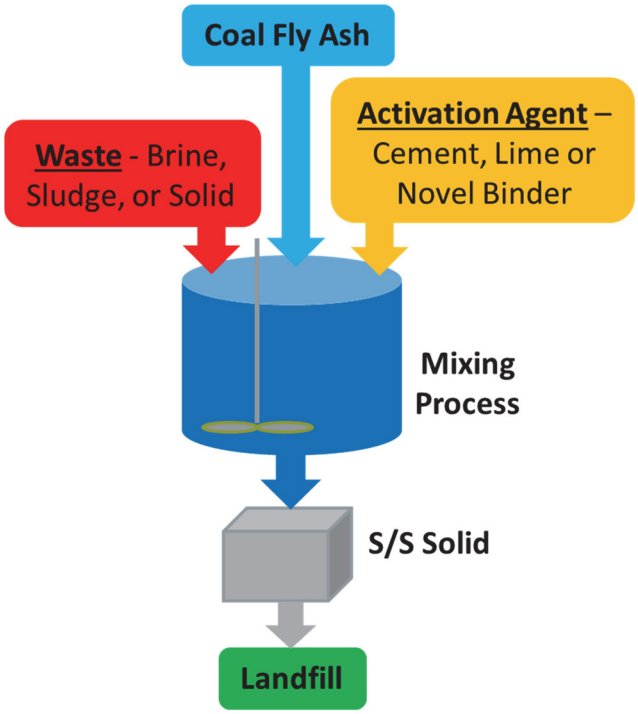

Solidification and Stabilization Overview for Long Term Treatment of Brine Contaminants and Coal Fly Ash.

Integrated Sensors for Water Quality

Performer: Sporian Microsystems, Inc.

Award Number: SC0013863

Project Duration: 06/08/2015 – 03/07/2016

Total Project Value: $ 154,999

Technology Area: Plant Optimization Technologies

The overall goal of this project is to develop a low-cost, rapidly-deployable, wireless, self-powered integrated water sensor package that can relay real-time information relevant to in-situ water monitoring. Measurements by the sensor package will include total dissolved solids, scale forming minerals (e.g., calcium), other salts (chlorine), heavy metals (RCRA-8), temperature, turbidity, flow, and pH.

To achieve these goals, Phase I of this project will (1) prepare, optimize, and characterize imprinted polymer (IP) systems; (2) evaluate IP film fabrication methodologies; and (3) experimentally evaluate and demonstrate IP sensing performance with Sporian's existing sensor system hardware.

The successful completion of this project could help to maintain or reduce the water-use footprint in the energy sector. It could also provide highly reliable, real-time measurement-based data for water management with a low cost to deploy. This technology could be highly attractive to monitoring sectors that require sanitary water for consumption or whose processes affect water and need sensing capability to ensure proper contamination monitoring and abatement. This could include such sectors as energy, industrial/agricultural, civilian drinking water, and wastewater monitoring.

Hardware variant for inline treatment monitoring with optional ruggedized handheld interface.

Development of Membrane Distillation Technology Utilizing Waste Heat for Treatment of High Salinity Wastewaters

Performer: University of Pittsburgh

Award Number: FE0024061

Project Duration: 10/01/2014 – 09/30/2016

Total Project Value: $ 654,183

Technology Area: Plant Optimization Technologies

The main objective of this study is to evaluate the feasibility of using membrane distillation (MD) technology to treat high salinity wastewater generated during unconventional gas production or CO_2 sequestration utilizing waste heat that is available in thermoelectric power plants or compressor stations (both natural gas [NG] and CO_2 compressors). Technical information developed in these laboratory-scale studies will be utilized for a systems-level integration of the MD process with low-grade heat sources (i.e., thermoelectric power plants and NG and CO_2 compressor stations) or NG as a fuel source. The project's approach is to (1) examine the laboratory-scale performance of two MD schemes (Direct Contact Membrane Distillation and Vacuum Membrane Distillation), along with operating conditions and process configurations in terms of productivity and permeate quality; (2) conduct laboratory-scale studies with synthetic and actual wastewaters to assess the capabilities and limitations of MD technology and define key design and operating parameters. High-salinity produced waters representative of several shale gas plays and geologic sequestration locations are being used to study how water composition affects MD performance; (3) use this information for a systems-level analysis to assess the feasibility of integrating MD process with low-grade heat sources (i.e., thermoelectric power plants and natural gas and CO_2 compressor stations); and (4) conduct a preliminary economic assessment of MD technology for saline wastewater treatment.

This project may advance the use of alternative sources of energy for treatment of wastewater, promote the recycle and reuse of wastewater, reduce the energy footprint and enhance the mobility of treatment systems, and enhance the economic and environmental performance of MD technology.

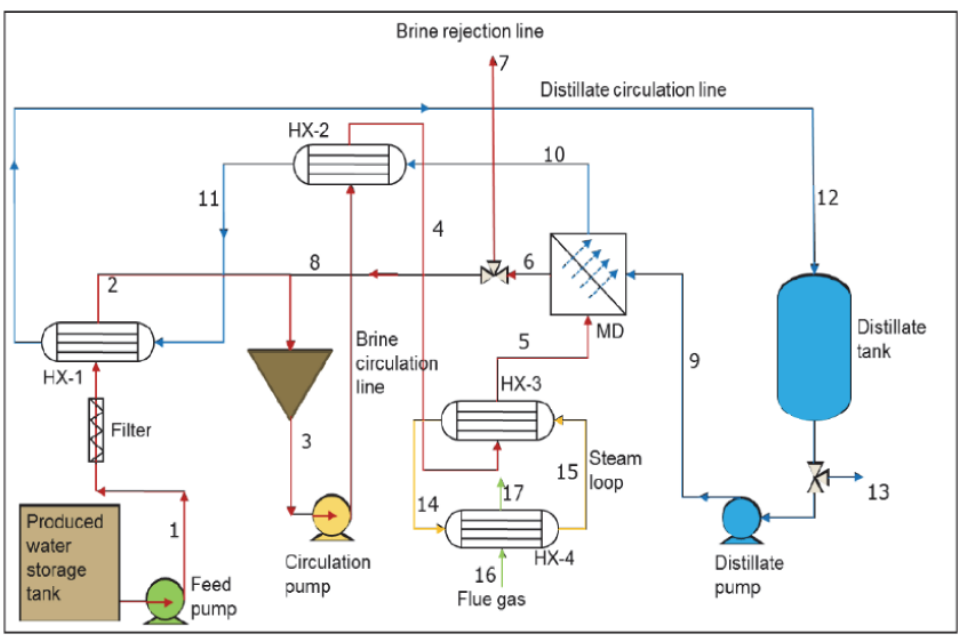

Flow diagram of plant level configuration for desalination of produced water by membrane distillation (MD).

Data Modeling and Analysis

Performer	Project Title	Page
SNL – Sandia National Laboratories	Exploring Energy-Water Issues in the United States	29

Exploring Energy-Water Issues in the United States

Performer: SNL – Sandia National Laboratories

Collaborator: Carnegie Mellon University

Award Number: FWP-14-017626

Project Duration: 10/01/2014 – 09/30/2016

Total Project Value: $ 1,133,000

Technology Area: Plant Optimization Technologies

The objective of the work is to develop data and models to better understand the link between thermoelectric power generation and water. This effort will involve two broad areas of research, one involving the development of a water atlas and the second involving assessing water use requirements of fossil-fueled electric power plants. The water atlas task will compile estimates of water availability, cost, and projected future demand at the watershed level (8-digit Hydraulic Unit Code [HUC], corresponding to roughly 2,250 watersheds) for the lower 48 states. Water availability and cost metrics will be developed for four sources of water including surface water, groundwater, municipal wastewater, and shallow brackish groundwater. The second task will enhance the analytical capabilities of the Integrated Environmental Control Model (IECM) to assess water use requirements of fossil-fueled electric power plants to consider a variety of alternative water treatment and cooling technologies and processes for CCS.

The Enhanced IECM may significantly enhance the ability to analyze and assess water needs, costs, and impacts of fossil energy plants. In addition, it could provide an integrated analysis of low-carbon electricity generation, alternative water technologies, and regional water resource impacts. As a publicly available tool, it could allow a broad range of constituents to utilize the results of NETL-supported research on water and carbon capture technologies.

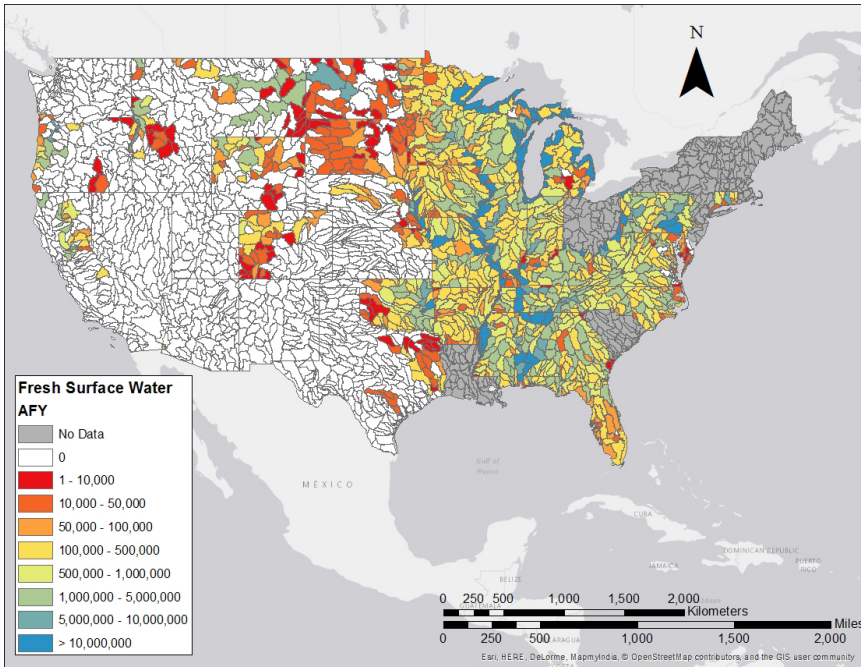

Fresh Surface Water Availability Mapped at the HUC-8 Level for the Conterminous United States.

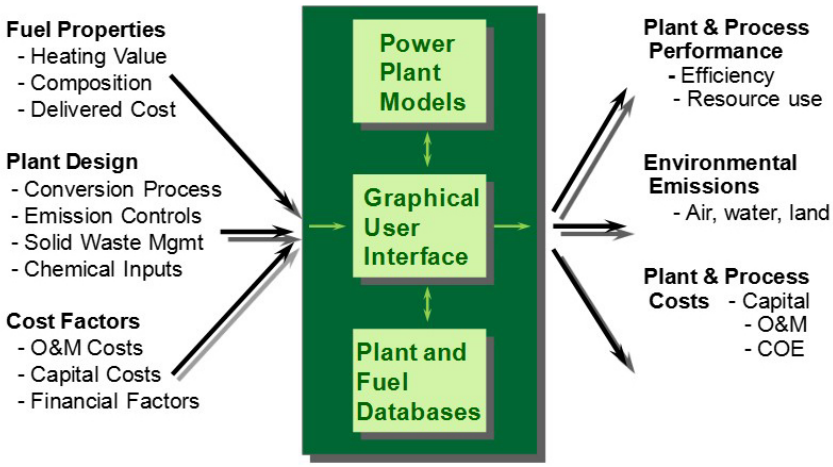

IECM Software Package

Abbreviations

°C ..... degrees Celsius
°F ..... degrees Fahrenheit
Ca ..... calcium
CCS ..... carbon capture and storage
CCSI ..... Carbon Capture Simulation Initiative
ChemFET ..... chemical field effect transistors
Cl ..... chlorine
CNT ..... carbon nanotubes
CO2 ..... carbon dioxide
COHO ..... Porifera water treatment system, powered by low-grade heat and carbon dioxide, that combines the high-performance of a novel forward osmosis (FO) membrane with a carbon-dioxide based switchable draw.
DOE ..... [U.S.] Department of Energy
EC ..... evaporative crystallization
ECMD ..... electrically conductive membrane distillation
EPRI ..... Electric Power Research Institute
E-stripping ..... electrochemical stripping
FGD ..... flue gas desulfurization
FO ..... forward osmosis
FY16 ..... Fiscal Year 2016
GE ..... General Electric
GTI ..... Gas Technology Institute
H ..... hydrogen
HBCU ..... Historically Black Colleges and Universities
HGSMBS ..... hot gas sweep membrane brine separation
HUC ..... hydraulic unit code
ICCI ..... Illinois Clean Coal Institute
IECM ..... Integrated Environmental Control Model
INL ..... Idaho National Laboratory
IP ..... imprinted polymer
IPT ..... Innovative Process Technologies
LANL ..... Los Alamos National Laboratory
MD ..... membrane distillation
Mg ..... magnesium
mg/L ..... milligrams per liter
MGSC ..... Midwest Geological Sequestration Consortium
MVX ..... mechanical vapor compression
Na ..... sodium
NAS ..... non-aqueous solvents
NETL ..... National Energy Technology Laboratory
NG ..... natural gas
NM ..... nanomembrane
NORM ..... naturally occurring radioactive material
NRAP ..... National Risk Assessment Partnership
OMI ..... Other Minority Institutions
PCC ..... pulverized coal combustion
pH ..... power of hydrogen
ppm ..... parts per million
PSU ..... Pennsylvania State University
R&D ..... research and development
RCRA-8 ..... Resource Recovery and Conservation Act lists and monitors a group of eight heavy metals
RIC ..... Research & Innovation Center
RO ..... reverse osmosis
S/S ..... solidification and stabilization
SCW ..... supercritical water
SNL ..... Sandia National Laboratories
SREM ..... strategic and rare earth minerals
TDS ..... total dissolved solids
TMC ..... Transport Membrane Condenser
TPY ..... tons per year
UAV ..... unmanned aerial vehicle
UCR ..... University Coal Research
USGS ..... United States Geological Survey
UTR ..... University Training and Research
ZLD ..... zero liquid discharge

Contacts

Robert Romanosky
Acting Portfolio Manager
304-285-4721
Robert.Romanosky@netl.doe.gov

Patricia Rawls
Supervisor
Enabling Technologies and Partnerships Team
412-386-5882
Patricia.Rawls@netl.doe.gov

Websites:

http://energy.gov/fe/coal-utilization-science

http://www.netl.doe.gov/research/coal/crosscutting

Acknowledgements

The Water Management Project Portfolio was developed with the support of Principal Investigators, Federal Project Managers, Portfolio Managers, Supervisors, and National Energy Technology Laboratory site-support contractors.

National Energy Technology Laboratory

www.netl.doe.gov

National Energy
Technology Laboratory

1450 Queen Avenue SW
Albany, OR 97321-2198
541-967-5892

420 L Street, Suite 305
Anchorage, AK 99501
907-271-3618

3610 Collins Ferry Road
P.O. Box 880
Morgantown, WV 26507-0880
304-285-4764

626 Cochrans Mill Road
P.O. Box 10940
Pittsburgh, PA 15236-0940
412-386-4687

13131 Dairy Ashford Road, Suite 225
Sugar Land, TX 77478
281-494-2516

WEBSITE: **www.netl.doe.gov**

CUSTOMER SERVICE: **1-800-553-7681**

U.S. DEPARTMENT OF ENERGY

April 2016