Addressing the Challenge of Low-Emission Combustion

Geo. A. Richards (gricha@fetc.doe.gov)
Kent H. Casleton (kcasle@fetc.doe.gov)
Daniel J. Maloney (dmalon@fetc.doe.gov)
Randall S. Gemmen (rgemme@fetc.doe.gov)

Federal Energy Technology Center
P.O. Box 880, 3610 Collins Ferry Road
Morgantown, WV 26505

Introduction

The Advanced Turbine Systems program has produced impressive advances in combustion technology. Careful development of premix systems allows state-of-the-art combustors to operate with NO_X levels approaching single digit performance. Although this progress is notable, reliable attainment of ultra-low emissions is contingent on tight control of manufactured components, engine operating parameters, and fuel specifications. Failure to operate a premix combustor within planned specifications can lead to problems that range from failure to meet emissions targets to hardware failure caused by flashback or oscillating dynamics. This sensitive behavior presents a challenge for expanded deployment of low-emission combustors that have been optimized almost exclusively for operation with natural gas fuel. The desire to operate such combustors on various fuels or in unique engine cycles (e.g., highly humidified cycles, biomass gasification combined cycles) poses a new set of constraints for low-emission operation.

The Combustion and Cleanup Division at the Federal Energy Technology Center (FETC) is conducting several research projects aimed at expanding the successful application of low-emission combustors. In this paper, we outline various FETC activities addressing emerging options for attaining reliable, low-emission combustion in advanced gas turbines. As described in an earlier paper (Halow, Maloney, and Richards 1994), the FETC laboratories provide a mid-scale test facility where Government, industrial, and university partners can participate in collaborative research programs. Interested parties can obtain detailed information from one of the authors about Cooperative Research and Development Agreements (CRADAs), or university participation through the South Carolina Energy R&D Center (SCERDC) industry/university consortium.

We outline ongoing work in the following areas:

(1) Effects of fuel composition on low-emission combustion dynamics.
(2) Investigation of a non-catalytic oxidizer for extremely low heating-value fuels.
(3) Humidified air combustion to support the development of advanced turbine humid-air cycles.
(4) Tests of a novel porous burner, using thermal feedback for flame stabilization.

Projects covering each of these four topics are described below.

Fuel Composition in Low Emission Gas Turbines

The typical approach to achieve ultra-low NO_X emission in modern gas turbines is to premix the fuel and air, and burn the mixture at overall lean operating conditions. This approach avoids the diffusion flame burning that is responsible for thermal NO_X production. As shown in Figure 1a, for a typical premix combustor, the flame position and flame stability are determined by the fuel nozzle geometry, the air flow rate, and the combustion chemistry. For a constant fuel type, careful tailoring of the combustor design will produce excellent performance. However, Figure 1b shows that variable fuel impurities can produce flame relocation or flame oscillation. These problems can damage the combustor hardware through overheating or vibration, producing cycle fatigue, worn combustor seals, etc.

In an effort to quantify the sensitivity of the combustion process to changes in fuel type, FETC has compared the combustion dynamics from a premix fuel nozzle burning natural gas versus propane. A detailed paper describing these results is available (Janus et al. 1997). In Figure 2, we present the measure root mean square (RMS) pressure from these tests at several inlet air temperatures. In each graph, the horizontal plane represents the air flow rate and mixture equivalence ratio (i.e., the normalized fuel/air ratio, F/A as shown). The vertical scale is the measured RMS pressure. Comparing these graphs, note that both the fuel type (natural gas versus propane) and the inlet air temperature play a role in determining where the combustion will be stable (low RMS) or will oscillate (high RMS). As explained by Janus et al. (1997) these results indicate that optimal combustor design should include careful consideration of ambient conditions and potential problems with fuel variability. As an extreme example, Schadel et al. (1996) report that natural gas can include as much as 50 percent “peakshaving gas” during periods of high gas demand. The data in Figure 2 suggest that these excursions, if not accounted for, can present unexpected problems.

To assist the design of combustors and fuel injectors that are less sensitive to fuel composition, FETC has developed an experimental combustor to study the effect of fuel injector geometry on combustion dynamics (Figure 3). A detailed description of this combustor and recent results are presented in papers by Richards et al. (Richards, Gemen, and Yip 1997; Richards and Janus 1997). As shown in Figure 3, the modular fuel nozzle design allows different nozzle geometries to be studied by simply re-stacking the fuel injector “rings.” Recent test results using two points of fuel injection are shown in Figure 4. By injecting fuel at two locations (A and B), the measured RMS pressure at a wide range of operating conditions is lower than when injecting fuel at either positions A or B alone. The bar graphs compare the measured RMS pressure versus the equivalence ratio at 30, 40, 50 and 60 m/s nozzle reference velocity. Test conditions were 7.5 atm pressure, with 600 °F inlet air temperature. As shown, the combined injection at A and B usually produced a lower RMS pressure than injecting from the single points. This behavior appears to follow the hypothesis of Keller (1995) who suggested that combustion oscillations could be reduced by distributing the fuel along the axis of a fuel nozzle, rather than mixing in a single axial position. If this result can be generalized, it may offer a method to improve the stability of premix fuel nozzles, independent of fuel type. A complete report describing recent FETC tests with two points of fuel injection is available (Straub and

Richards 1998). Ongoing work will address further refinement of techniques to stabilize low-emission combustion, including dual-fuel applications (liquid and gas).

Low and Variable Heating Value Fuels

During 1997, FETC developed an atmospheric-pressure test combustor devoted to non-catalytic oxidation of low-heating-value fuels. The primary objective of this work was to validate FETC model predictions that it should be possible to completely oxidize the residual fuel energy produced by fuel cell exhaust streams, but without the cost and complexity of catalytic oxidizers. Figure 5 shows a photograph of the test facility, and a comparison of the FETC CASAM (Combustion and Sensitivity Analysis Model) (Gemmen 1996) and laboratory data. The data points show the gas temperature where fuel ignition occurs (anode gas temperature) for different heating-value fuels. Pollutant measurements corresponding to these data points showed that the FETC-developed combustion approach produced essentially pollutant-free combustion of these extremely dilute fuels, and may offer a practical, inexpensive alternative to catalytic oxidation of fuel cell exhaust streams. A complete report on recent results from these tests is being prepared.

The experimental facility shown in Figure 5 was designed to operate over a range of fuel compositions. Work in progress will cover a range of fuel compositions that may be of interest to gas turbines burning air-blown biomass gasifier products, or proposed fuel cell/turbine hybrid cycle arrangements.

Humid Air Combustion

In the quest for further increases in system performance, various advanced cycles have been suggested. One of these, the humid air turbine (HAT) cycle, involves the addition of significant moisture to the compressor discharge air so that the combustor inlet flow contains 20 to 40 percent water vapor. The additional mass flow of the water vapor substantially increases the turbine ouput. While this moisture should reduce the NO_X emissions significantly, the presence of high levels of moisture could also lead to combustion instabilities.

United Technologies Corporation and the Department of Energy are investigating HAT cycle technology development. Some of the goals of this effort are to identify applicable nozzle and combustor hardware for a full-scale system and to confirm that low emissions and high system efficiencies can be obtained for the HAT cycle. A significant amount of testing for this program will be performed in the Low Emissions Combustor Test and Research (LECTR) facility at FETC. In the first phase of testing, three sets of scaled fuel-air mixing nozzles are being tested over a wide range of pressures, steam loadings, equivalence ratios, and air preheat temperatures to map stability margins, combustion efficiency, and emission levels of NO_X, CO, and unburned hydrocarbons. In future phases of this work, combustor liner design and flame stability will be investigated.

Porous Surface Stabilized Burner for Low Emission Combustion

As discussed above, lean premixed combustion is the leading approach being developed to achieve low NO_X emissions in gas turbine engines. However, this approach can also lead to combustion instabilities with potential damage to hardware. Hence some engine manufacturers are investigating alternatives to lean premixed combustion. Alzeta Corporation is investigating the use of ultra-low NO_X, surface-stabilized combustor (SSC) technology for gas turbine applications. The goal of that effort is the development of a dry, low-NO_X gas turbine combustor that is reliable, quiet, compact and operates with low NO_X, CO, and unburned hydrocarbon emissions, suitable for operation in regions with stringent emissions regulations.

FETC and Alzeta Corporation have teamed through two CRADAs to investigate the operating characteristics of SSC burners for gas turbine applications. Parametric testing has been performed at FETC to determine the burner operating envelope, as well as the influences of equivalence ratio, combustion intensity, and Reynolds number on the burner surface temperature and NO_X emissions. Burner testing was successful with regard to demonstrating operation at pressures up to 12 atmospheres with CO and NO_X levels below 10 ppm. Follow-on work to investigate improved burner stability and durability is planned.

Summary

Although considerable progress has been made to develop low-emission turbine combustors, reliable low-emission operation on a wide range of fuels presents a continuing challenge for future combustor designs. To address this issue, FETC's Combustion and Cleanup Division is gathering basic data on the effects of variable operating conditions (different fuel types, humidified air) as well testing various methods for mitigating combustion oscillation problems. In addition, FETC is investigating novel combustion concepts for potential application in low-emission power systems. The FETC facilities provide a mid-size laboratory where novel concepts as well as basic data can be gathered in collaborative projects with industry and academia. Ongoing work is aimed at further application of low-emission combustion for advanced energy systems.

References

Gemmen, R.S. 1996. Optimized Air Staged Injection for the Oxidation of Low Calorific Value Gases. Presented at the Combustion Institute/Eastern States Section Fall Technical Meeting, December 9-11, Hilton Head, SC.

Halow, J.S., D.J., Maloney, and G.A. Richards. 1994. METC Combustion Research Facility. In *Proceedings of the Advanced Turbine Systems Annual Program Review Meeting*. DOE/OR-2025.

Janus, M.C., G.A. Richards, M.J. Yip, and E.H. Robey. 1997. Effects of Ambient Conditions and Fuel Composition on Combustion Stability. Accepted by *ASME Journal of Engineering for Gas Turbines and Power*. ASME paper 97-GT-266.

Keller, J.J. 1995. Thermoacoustic Oscillations in Combustion Chambers of Gas Turbines. *AIAA Journal* 33 (12): 2280-2287.

Richards, G.A., and M.C. Janus. 1997. Characterization of Oscillations During Premix Gas Turbine Combustion. Accepted by *ASME Journal of Engineering for Gas Turbines and Power*. ASME paper 97-GT-244.

Richards, G.A., R.S. Gemmen, and M.J. Yip. 1997. A Test Device for Gas Turbine Combustion Oscillations. *ASME Journal of Engineering for Gas Turbines and Power*. 119: 776-782.

Schadedel, S., C. Czachorski, P. Rowley, M. Richards, Y. Shidari. 1996. *Gas Composition Issues and Implications for Natural Gas Vehicles and Fuel Stations, Topical Report.* Institute of Gas Technology, Contract No. 5093-493-2682, GRI-96/0028.

Straub, D.L., and G.A. Richards. 1998. Effect of Nozzle Geometry on Premix Combustion Oscillations, Submitted for presentation at the 1998 ASME/IGTI Turbo-Expo Meeting, June 2-5, Stockholm, Sweden.

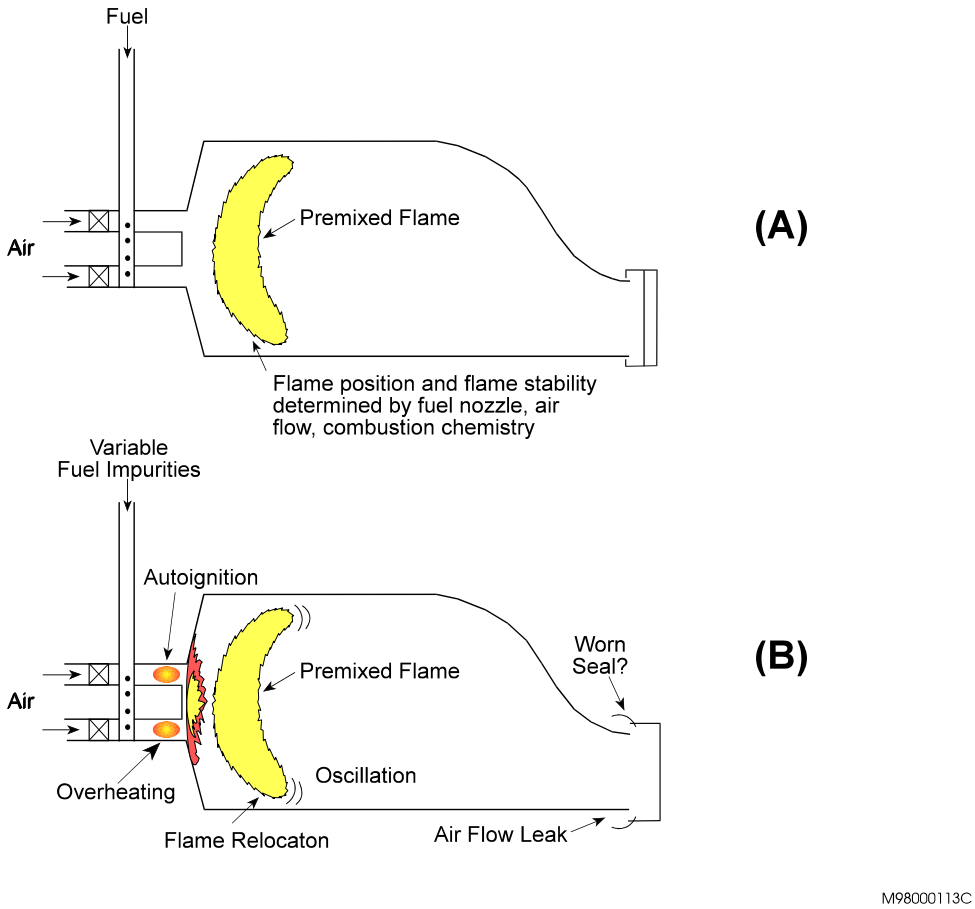

Figure 1. **Schematic of Typical Premix Combustor** In Figure 1a, the flame position and stability are determined by the noted parameters. In Figure 1b, a change in fuel properties may be accompanied by a change in flame position or stability.

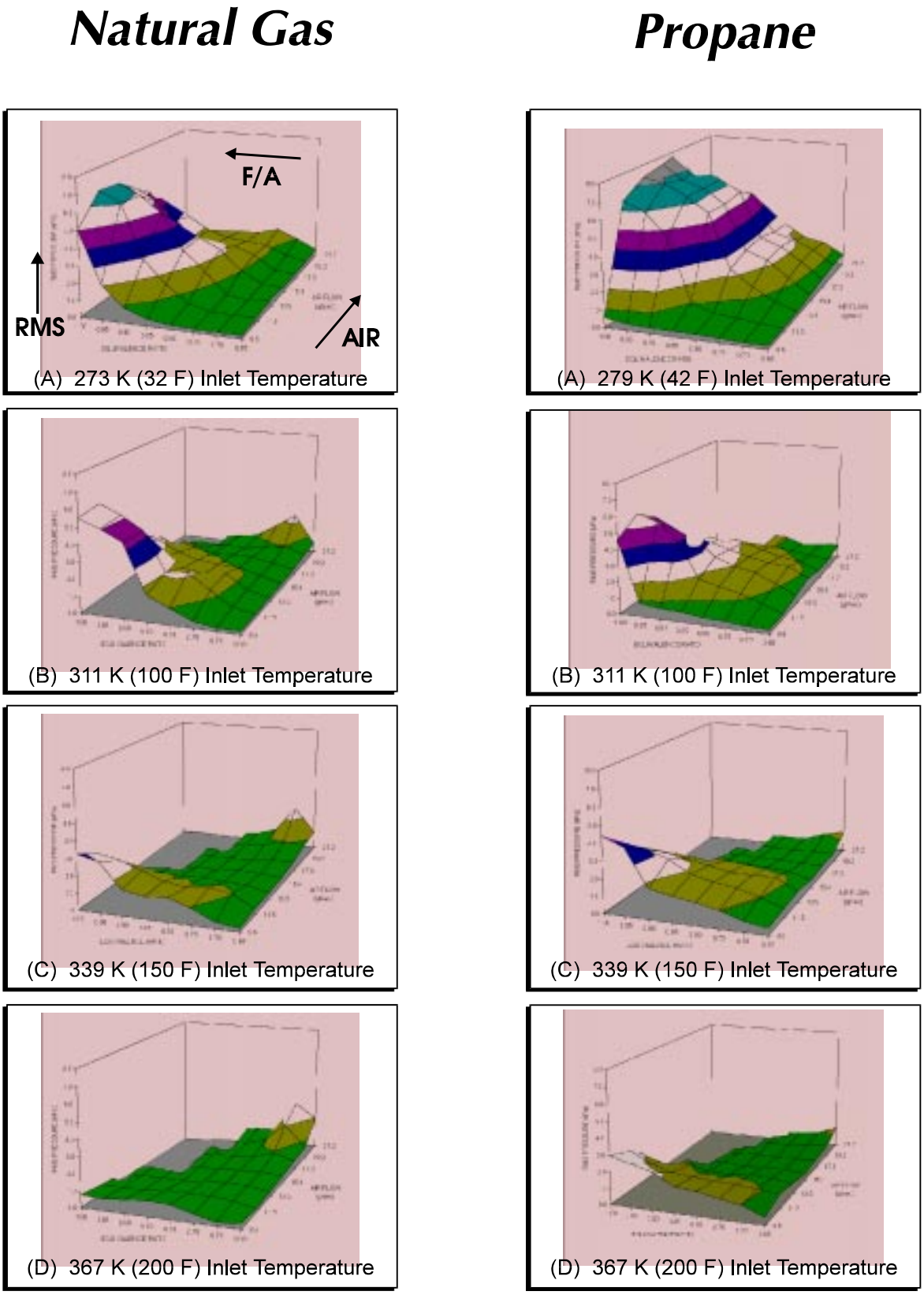

M98000115C

Figure 2. Measure Root Mean Square (RMS) Pressure From Premix Combustion Tests at Different Inlet Air Temperatures, Comparing Natural Gas and Propane Combustion

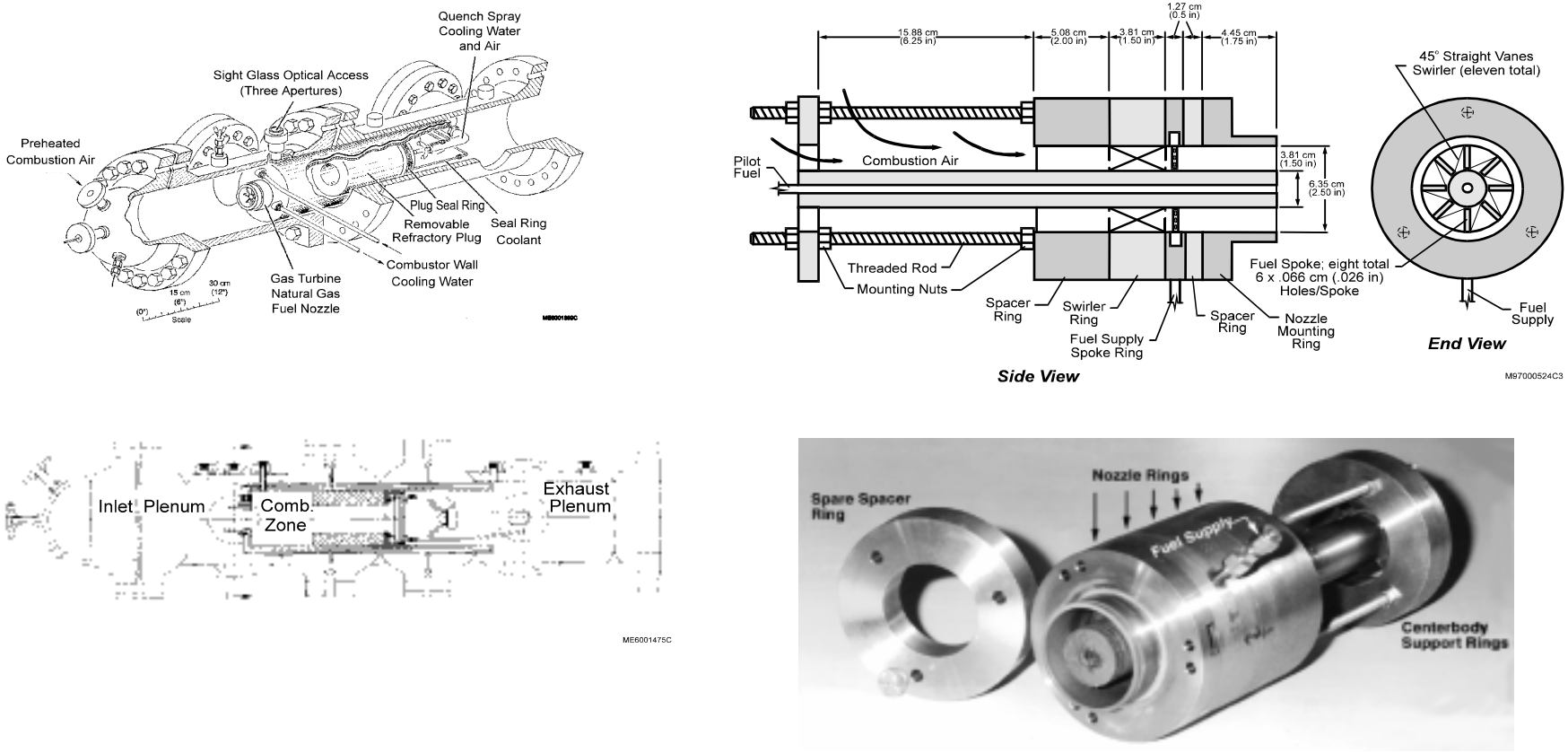

Figure 3. FETC Experimental Combustor and Modular Fuel Nozzle

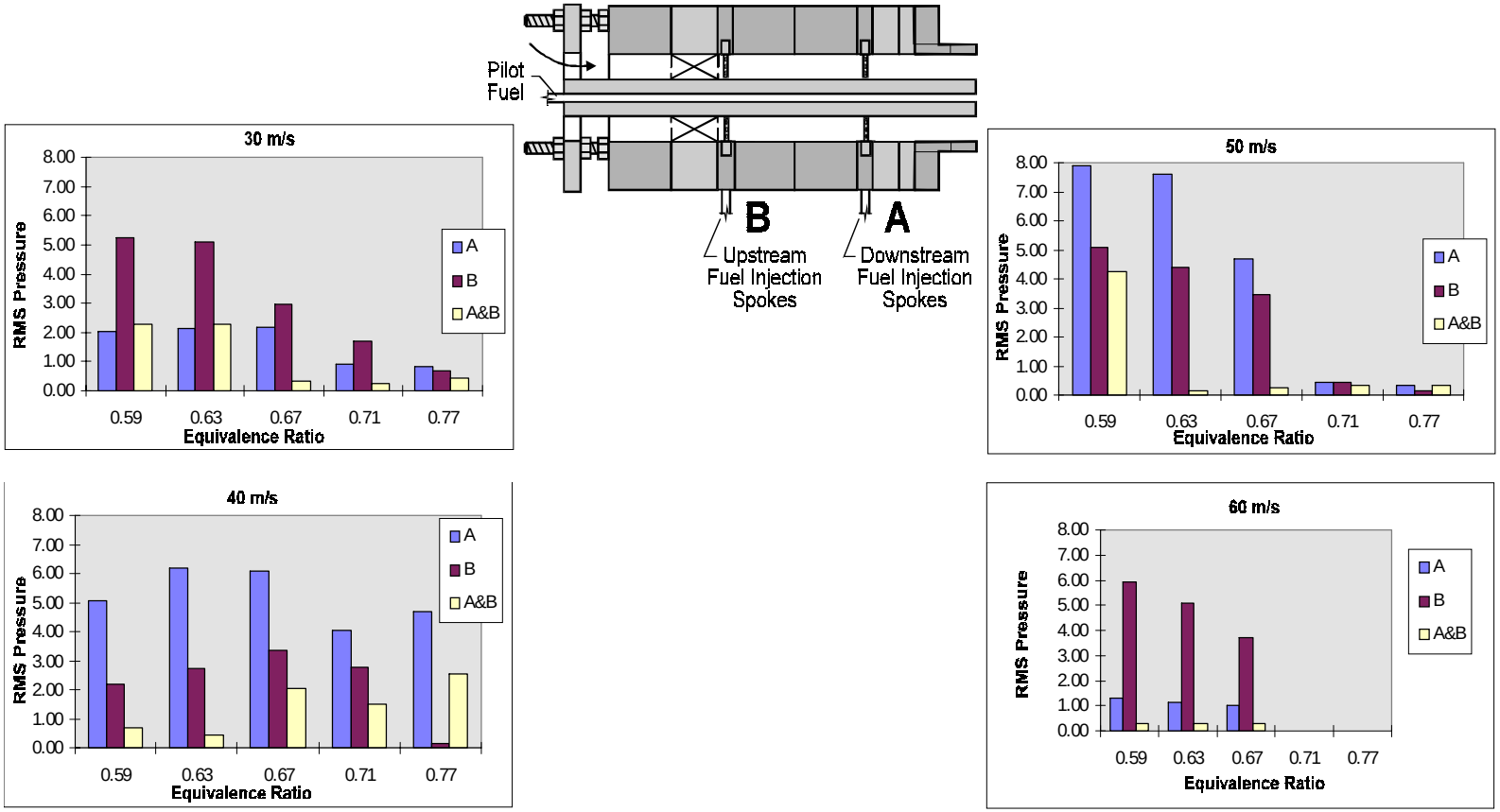

Figure 4. Results from Experimental Combustor, Showing That Combined Fuel Injection at Points A and B Produce Enhanced Stability for Various Air Velocities (30 - 60 m/s) and at Different Equivalence Ratios

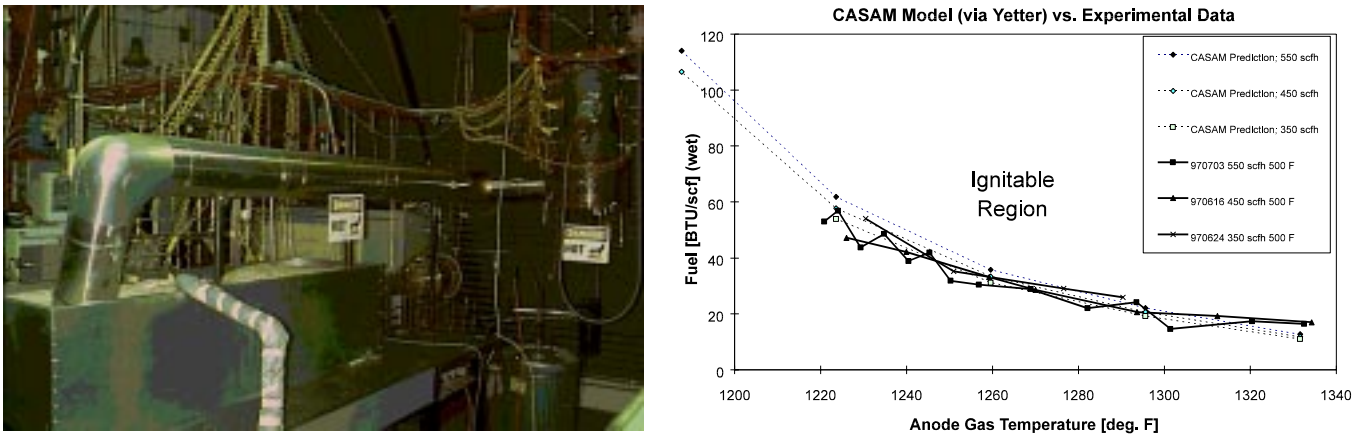

M98000121C

Figure 5. Photo of Low-heating Value Test Combustor and Numeric/Experimental Results Showing Ignition of Dilute Fuel Streams at Various Temperatures