ENGINEERING FEASIBILITY OF CO_2 CAPTURE ON AN EXISTING US COAL-FIRED POWER PLANT

Nsakala ya Nsakala (nsakala.y.nsakala@power.alstom.com; 860-285-2018)
John Marion (john.l.marion@power.alstom.com; 860-285-4539)
Carl Bozzuto (carl.bozzuto@power.alstom.com; 860-285-5007)
Gregory Liljedahl (greg.n.liljedahl@power.alstom.com; 860-285-4833)
Mark Palkes (mark.palkes@power.alstom.com; 860-285-2676)
ALSTOM Power Inc.
US Power Plant Laboratories
2000 Day Hill Rd.
Windsor, CT 06095

David Vogel (david.c.vogel@us.abb.com; 713-821-4312)
J.C. Gupta (jcgupta@us.abb.com; 713-821-5093)
ABB Lummus Global Inc.
3010 Briarpark
Houston, TX 77042

Manoj Guha (mkguha@aep.com; 614-223-1285)
American Electric Power
1 Riverside Plaza
Columbus, OH 43215

Howard Johnson (hjohnson@odod.state.oh.us; 614-644-8368)
Ohio Coal Development Office
77 South High St, 25th Floor
Columbus, OH 43216

Sean Plasynski (plasynsk@fetc.doe.gov; 412-386-4867)
US DOE NETL
626 Cochrans Mill Rd.
Pittsburgh, PA 15236

For Presentation at the
First National Conference on Carbon Sequestration
May 15-17, 2001, Washington DC

ABSTRACT

ALSTOM Power Inc.'s US Power Plant Laboratories (ALSTOM) has teamed with American Electric Power (AEP), ABB Lummus Global Inc. (ABB), the US Department of Energy National Energy Technology Laboratory (DOE), and the Ohio Coal Development Office (OCDO) to conduct a comprehensive study evaluating the technical feasibility and economics of alternate CO_2 capture and sequestration technologies applied to an existing US coal-fired electric generation power plant. Three retrofit technology concepts are being evaluated, namely:

- Concept A: Coal combustion in air, followed by CO_2 separation with Kerr-McGee/ABB Lummus Global's commercial MEA-based absorption/stripping process
- Concept B: Coal combustion with O_2 firing and flue gas recycle
- Concept C: Coal Combustion in air with Oxygen Removal and CO_2 Separation by Tertiary Amines

Each of these technologies is being evaluated against a baseline case and CO_2 tax options from the standpoints of performance and impacts on power generating cost. A typical existing US domestic pulverized coal fired power plant is being used in this evaluation. Specifically, AEP's 450 MW Conesville Unit No. 5, located in Conesville, Ohio is the power plant case study. All technical performance and cost results associated with these options are being evaluated in comparative manner. These technical and economic issues being evaluated include:

- Boiler performance and plant efficiency
- Purity of O_2 produced and flue gas recycled
- Heat transfer into the radiant and convective sections of the boiler
- NO_X, SO_2, CO and unburned carbon emissions
- Heat transfer surface materials
- Steam temperature control
- Boiler and Steam Cycle modifications
- Electrostatic Precipitator system performance
- Flue Gas Desulfurization system performance
- Plant systems integration and control
- Retrofit investment cost and cost of electricity (COE)

ALSTOM is managing and performing the subject study from its US Power Plant Laboratories office in Windsor, CT. ABB, from its offices in Houston, Texas, is participating as a sub-contractor. AEP is participating by offering their Conesville Generating Station as the case study and cost sharing consultation, and relevant technical and cost data. AEP is one of the largest US utilities and as the largest consumer of Ohio coal is bringing considerable value to the project. Similarly, ALSTOM and ABB are well established as global leaders in the design and manufacturing of steam generating equipment, petrochemical and CO_2 separation technology. ALSTOM's world leaders in providing equipment and services for boilers and power plant environmental control, respectively, and are providing their expertise to this project. The DOE National Energy Technology Laboratory and the Ohio Coal Development Office provided consultation and funding. All participants contributed to the cost share of this project.

The motivation for this study was to provide input to potential US electric utility actions to meet Kyoto protocol targets. If the US decides to reduce CO_2 emissions consistent with the Kyoto protocol, action would need to be taken to address existing power plants. Although fuel switching to gas may be a likely scenario, it will not be a sufficient measure and some form of CO_2 capture for use or disposal may also be required. The output of this CO_2 capture study will enhance the public's understanding of control options and influence decisions and actions by government, regulators, and power plant owners to reduce their greenhouse gas CO_2 emissions.

TECHNICAL ANALYSIS

The technical approach followed and results obtained therefrom are presented in this paper. The investment costs and economic analysis are currently under study, and will be presented in subsequent publications.

Study Unit Description.

The unit analyzed in this study was AEP's Conesville Unit #5. The sectional side elevation drawing of the study unit steam generator is shown in Figure 1. This unit can be described as a nominal 450 MWe-gross, tangentially coal fired, subcritical pressure, controlled circulation, radiant reheat unit. Its generator produces 463 MW of electric power at maximum continuous rating (MCR). The furnace is a single cell design utilizing five elevations of tilting tangential coal burners. The unit fires mid-western bituminous coal. The coal is pulverized in five 903-RP bowl mills and fed into the boiler through five elevations of tilting-tangential fuel nozzles. The 903-RP bowl mill has a design base capacity of 119,000 lb/h of coal with a Hardgrove Grindability Index of 55, and is pulverized to 70% through 200 mesh. The unit is

configured in a “Conventional Arch” type design and is representative in many ways of a large number of coal fired units in use today. The unit is designed to generate about 3.1 x 10^6 lbm/hr of steam at 2400 psig and 1005 ^oF with reheat also to 1005 ^oF. These represent the most common steam cycle operating conditions for existing utility scale power generation systems. Outlet steam temperature control is provided with de-superheating spray and burner tilt. The other major components of Unit #5 are identified in Figure 1.

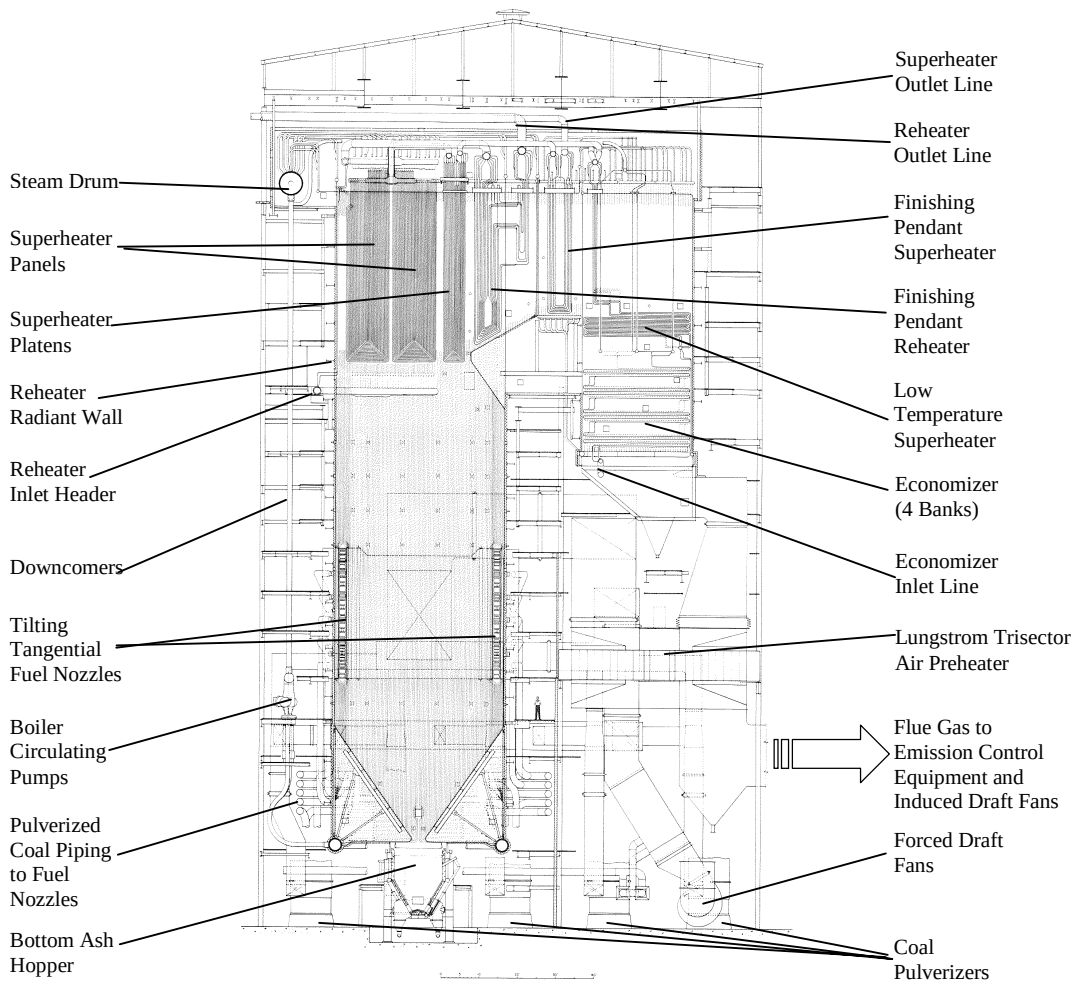

Figure 1: Side Elevation of AEP’s Conesville Unit No. 5

Base Case Analysis.

The Base Case represents the “business as usual” operating scenario and was used as the basis of comparison for the three CO_2 capture concepts investigated in this study. The first step in the development of a Base Case was to set up ALSTOM’s proprietary computer model of the boiler. The computer model was calibrated, using test data supplied by Conesville Plant personnel. The calibrated boiler model was then used for analysis of the Base Case and the three CO_2 capture concepts.

Using the calibrated boiler model and providing it with steam side inputs (mass flows, temperatures, and pressures) from the agreed upon MCR steam turbine material and energy balance, the model was run

and performance was calculated for the Base Case. The simplified gas side process flow diagram for the Base Case is shown in Figure 2.

Steam temperature control was achieved through the use of burner tilt and de-superheating spray. The performance analysis results indicated the reheater circuit required about 3.1% spray to maintain the reheat outlet temperature at the design value. The superheater circuit required about 3.6% spray to maintain the superheat outlet temperature at the design value. The burner tilt was set at –10 degrees, the minimum value the customer uses.

Boiler efficiency was 88.13%, the net plant heat rate was 9,749 Btu/kWh, and overall plant thermal efficiency was about 35%. Auxiliary power and net plant output were 29,700 kW and 433,778 kW, respectively. Carbon dioxide emission was 866,156 lbm/hr or about 1.997 lbm/kWh.

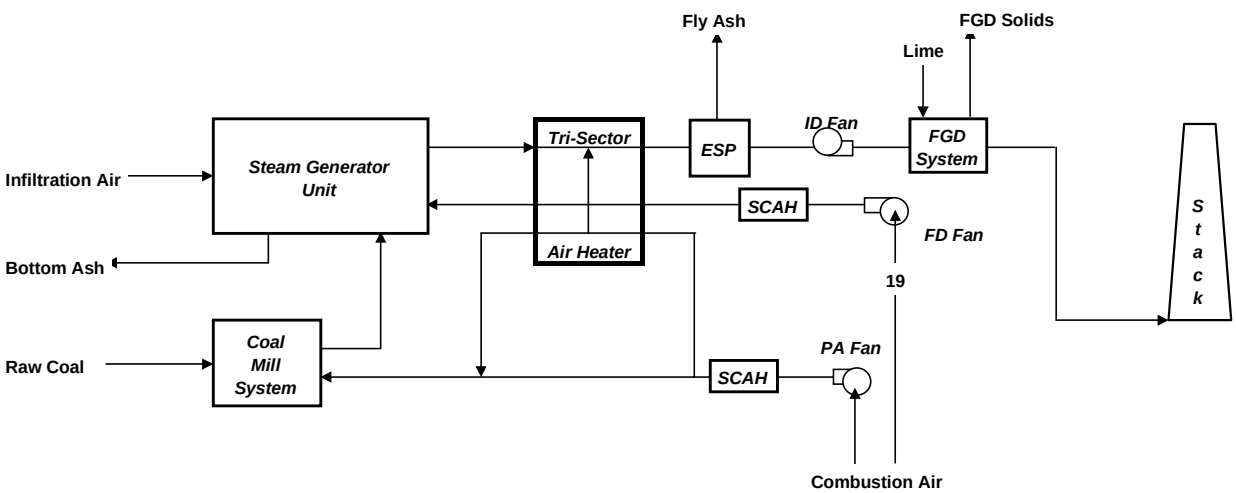

Figure 2: Simplified Existing Power Plant Gas Side Process Flow Diagram

Concept A: CO_2 Separation with Monoethanolamine (MEA) Absorption

Concept A is a process entailing the following: Coal is burned conventionally in air. A commercially proven Kerr-McGee/ABB MEA-based CO_2 recovery process, installed downstream of the flue gas desulfurization unit, is integrated into the power plant to strip CO_2 from the effluent gas stream (containing about 15% CO_2 by volume).

Overall System Description. A simplified process flow diagram for the modified unit is shown in Figure 3. It should be noted that the flue gas desulfurization (FGD) unit was modified with the addition of a secondary absorber to reduce the SO_2 content to about 10 dppmv as required by the amine system downstream. The flue gases leaving the modified FGD system are cooled with a direct contact cooler and ducted to the MEA system where more than 96% of the CO_2 is removed, compressed, and liquefied for usage or sequestration. The remaining flue gases leaving the new MEA system, consisting of primarily oxygen, nitrogen, water vapor and a relatively small amount of sulfur dioxide and carbon dioxide, is discharged to the atmosphere.

Boiler performance for this case was identical to the Base Case. Boiler efficiency was 88.13%. The net plant heat rate, on the other hand, increased significantly to 16,217 Btu/kWh due to steam cycle changes and increased auxiliary power. Hence, the overall plant thermal efficiency was about 21%, or 60% of the Base Case value. Auxiliary power increased to 70,655 kW and the net plant output was reduced to

260,757 kW. Carbon dioxide emission was 31,049 lbm/hr or about 0.119 lbm/kWh (or about 6% of the Base Case).

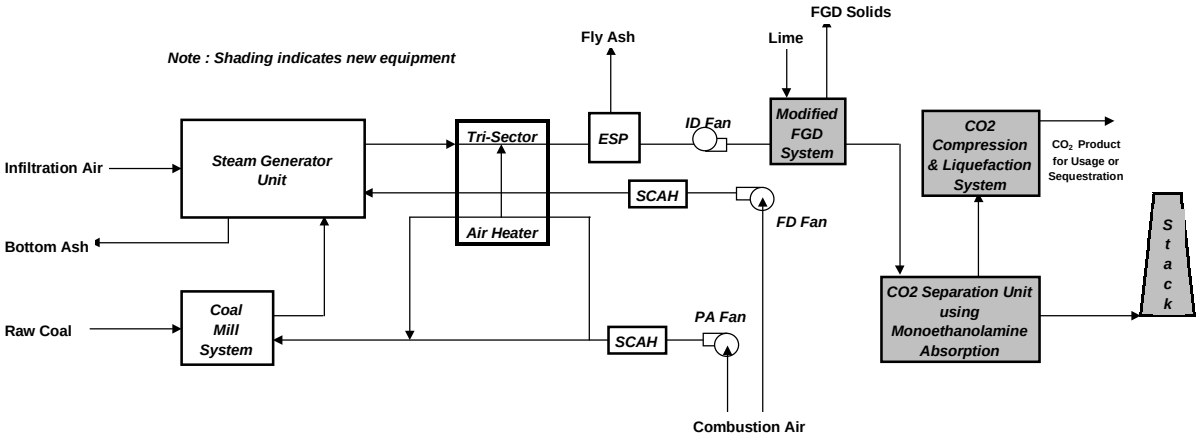

Figure 3: Simplified Gas Side Process Flow Diagram for CO_2 Separation by MEA Absorption (Concept A)

Steam Cycle Modifications and Performance. The steam cycle system for Concept A was modified as described below. About 79% of the IP turbine exhaust is extracted from the IP/LP crossover pipe. This steam is expanded to about 65 psia through a new steam turbine generating 62,081 kW. The exhaust from the new turbine, at about 478 ^{o}F, is de-superheated and then provides the heat requirement for the reboilers of the MEA CO_2 recovery system. The condensate from the reboilers is pumped to the deaerator. The modified existing steam cycle system produces 269,341 kW. The total output from both generators is 331,422 kW. This represents a gross output reduction of 132,056 kW (about 28%) as compared to the Base Case.

Carbon Dioxide Separation and Compression System. The Kerr-McGee/ ABB amine technology is used for the Concept A CO_2 removal system. This system is the most proven of the three processes analyzed in this study. An important feature of this CO_2 recovery technology is its flexibility to operate with boilers or co-generation systems that fire fuels ranging from natural gas to high-sulfur coal and coke. The process tolerates oxygen in the flue gas via the addition of proprietary additives as well as limited amount of sulfur dioxide. Low corrosion rates and minimal loss of the circulating solvent used to absorb CO_2 ensure economical and reliable operation. For cost effectiveness, it was decided to add a secondary absorber to the FGD system and eliminate the causticizer from the front end of the MEA process.

The technology is based on conventional absorption / stripping using 20 wt.% MEA solution (1). The treated gas from the desulfurization system, after cooling and water removal, is sent to an absorber where it is scrubbed with MEA to recover most of the CO_2 (Figure 4). The scrubbed flue gases are vented to the atmosphere after water washing to minimize MEA losses. Rich amine solution from the absorber is preheated

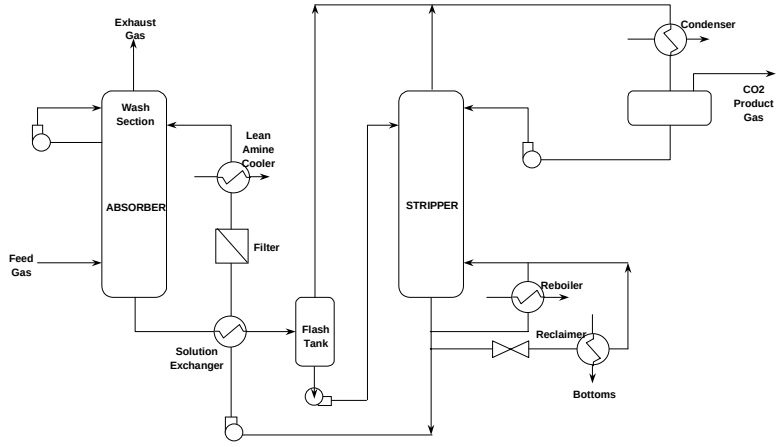

Figure 4: Kerr-McGee/Lummus Crest MEA-Based CO_2 Recovery System

in the solution exchanger against the lean amine solution and then sent to a flash tank. The flashed liquid solution is sent to the stripper and the flashed vapors are combined with the stripper overhead vapors and sent to the condenser where water vapor is condensed. The wet CO_2 product stream leaving the condenser is compressed, cooled, dried, liquefied and pumped to 2000 psig. Water condensed from the stripper overhead is returned to the system. The lean amine solution leaving the solution exchanger is filtered, cooled and returned to the absorber. The system recovers more than 96% of the CO_2.

Auxiliary power requirement for the overall system is 45013 kW. The plot plan required for the equipment is about 5 acres. The ultimate CO_2 liquid product in this study was found to have the following characteristics: CO_2 = 99.95 vol. %; N_2 = 0.05 vol. %; temperature = 82 ^oF; and pressure = 2000 psig. This product would meet the specifications for current pipeline practices (2).

Concept B: CO_2 Separation with Oxygen Firing and Flue Gas Recirculation

The basic concept of the overall system is to replace air with oxygen for combustion in the furnace. A stream of re-circulated flue gas to the furnace is required to maintain thermal balance in the existing boiler between the lower furnace region where evaporation takes place and the convective heat transfer surfaces where steam is superheated and reheated to the required temperature level. This arrangement produces a high carbon dioxide content flue gas which, after leaving the boiler system, is further processed to provide high-pressure carbon dioxide liquid product.

Overall System Description. A simplified system diagram for the modified unit is shown in Figure 5. The system was designed to provide maximum flexibility of operation and facilitates combustion of coal in either air or oxygen and recirculated flue gas mixture environment. Approximately two-thirds of the mass is recirculated to the boiler in order to maintain the thermal balance between heat transferred in the radiant furnace and the convective heat transfer surfaces and to generate required boiler performance. In addition, gas temperatures throughout the unit must be low enough to assure the ash, which is produced from the combustion of the fuel, is maintained in a state where the ash deposits can be easily removed. Additionally, heat flux to the furnace walls and convective pass heat exchangers must be maintained within material limits. For this reason recycled flue gas is supplied to the unit through a combination of new ducts and the existing air ducts. The modified system was designed to generate approximately 3.1×10^6 lbm/hr of steam, which represents the Maximum Continuous Rating of the unit. Two of the key assumptions used in the development of the material and energy balance were an oxygen stream purity of 99% by weight, and an air infiltration rate equivalent to one % of the total oxygen required for the process.

Boiler efficiency for Concept B was 90.47%, as compared with 88.13% for the Base Case, due to the addition of the Oxygen Heater and Parallel Feedwater Heaters. The net plant heat rate also increased, significantly, to 14,802 Btu/kWh, equivalent to an overall plant thermal efficiency of about 23%**.** This is about 66% of the Base Case value. Total auxiliary power increased to 183,365 kW as a result of the added Air Separation Unit and the CO_2 Compression and Liquefaction System. Net plant output was reduced to 279,691 kW. Carbon dioxide emissions are 51,702 lbm/hr or about 0.185 lbm/kWh (about 9% of the base Case value).

Air Separation Unit. The Air Separation unit (ASU) includes a cryogenic plant for air separation. Economic considerations for this application favored the selection of oxygen stream purity of 99% by weight. Three trains were required to produce the required oxygen mass flow rate of about 8924 tons per day. This system consumes 95,943 kW of electric power or about 21% of the generator output. The plot plan for this equipment requires about 2.5 acres.

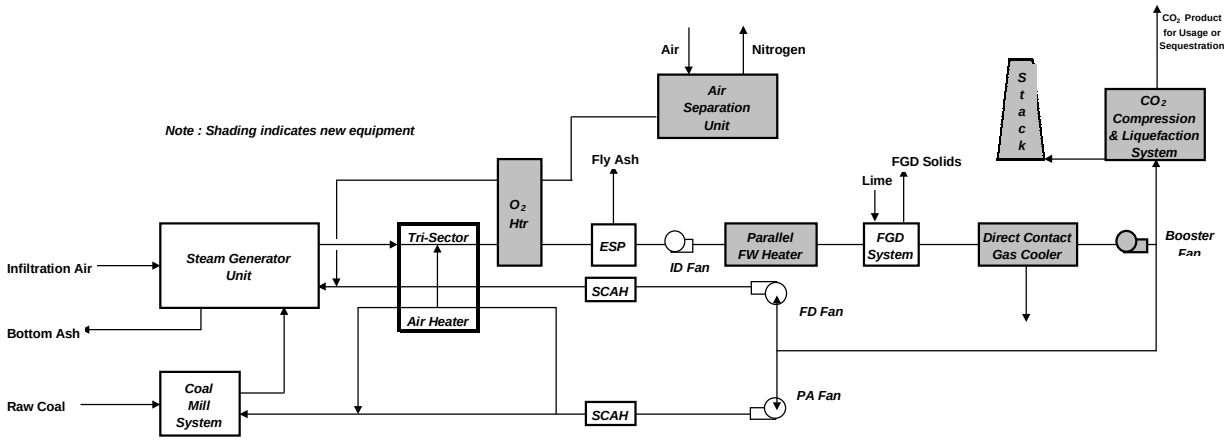

Figure 5: Simplified Gas Side Process Flow Diagram for CO_2 Separation with Oxygen Firing (Concept B)

Boiler Heat Transfer Analysis. The primary objective of the systems analysis task was to develop a system, which would produce high carbon dioxide content flue gas from an existing coal-fired boiler without requiring pressure part modifications to the boiler. In order to assess whether pressure part modifications would be necessary an accurate heat transfer analysis of the boiler was required.
The first step was to set up a steady state performance model of the Conesville #5 steam generator unit. After the model was calibrated, as a part of the Base Case analysis, additional adjustments were required in order to obtain an accurate heat transfer analysis with the high carbon dioxide content flue gas of the Concept B system. The combustion process occurs in a non-conventional environment, which produces gases of different physical and thermal properties as compared to the gases with air firing. These gas property differences cause significant differences in the heat transfer processes, which occur within the steam generator unit. Analyses were made to determine the impact of the heat transfer differences on boiler behavior. The ALSTOM Power RHBP model accounts for three modes of heat transfer in the upper furnace and convective pass of the unit (direct radiation, non-luminous radiation and convection).

Heat transfer in the lower and upper furnace regions as calculated by the RHBP is compared in Figure 6. This figure compares heat fluxes (Btu/hr-ft^2) in the lower and upper furnace region between air firing and oxygen firing. Lower furnace results show firing zone heat flux to be about 11% higher with oxygen firing. Upper furnace region results show the reheat radiant wall is about 6% higher and the superheat panels are about 13% higher with oxygen firing. Similarly, the upper furnace waterwall region is about 10% higher.

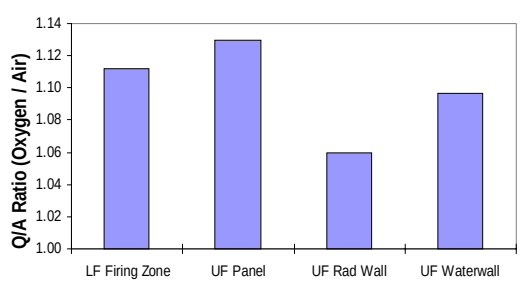

Figure 6: Furnace Region Heat Flux Comparison

Convection Pass Analysis**.** Convective heat transfer in utility steam generator units is dependent upon many of the transport properties of the flue gas (viscosity, thermal conductivity, density, specific heat and others). Additionally, convection depends strongly on gas velocity. With this system, there are significant changes in the flue gas analysis as compared with air firing. These gas analysis changes cause both transport property and gas velocity changes throughout the unit. Significant differences in non-luminous radiant heat transfer are also expected. Of the gases produced by the complete combustion of a fuel, only carbon dioxide, water vapor and sulfur dioxide emit radiation over a sufficiently wide band of wave lengths to warrant consideration. With this system the primary change in the flue gas as compared to air

firing is the large increase in the CO_2 content and decrease in N_2 content. The total heat transfer rates (convective + non-luminous radiation) for the convection pass are shown Figure 7. Increases are calculated to be in the range of 1 to 8% for oxygen firing over the values with air firing.

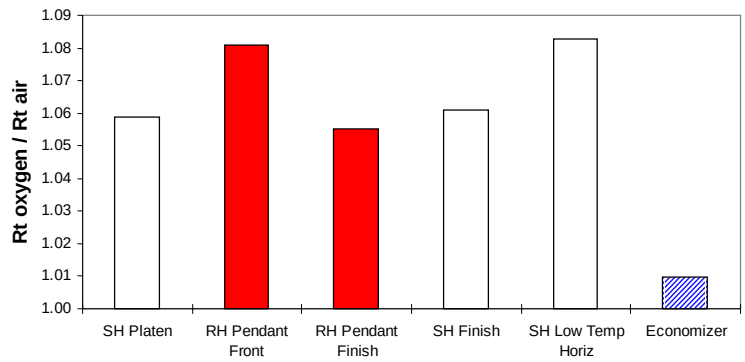

Figure 7: Convection Pass Total Heat Transfer Rate Comparison

Steam temperature control was achieved through the use of burner tilt and de-superheating spray. The performance analysis results indicated the reheater circuit required about 1.45% spray to maintain the reheat outlet temperature at the design value. The superheater circuit required about 0.34% spray to maintain the superheat outlet temperature at the design value. The burner tilt was set at –10 degrees, same as for the Base Case, the minimum value the customer uses.

With the increased heat transfer rates with oxygen firing and similar steam temperature profiles, there was concern regarding metal temperatures throughout the unit. A detailed analysis was, however, beyond the scope of this study. A very brief review of metal temperatures at only a few selected points was done in this study. In general, for the points investigated, the metal temperatures were found to be the same or slightly lower than with air firing. The primary reason for this result was that although the heat transfer rates were slightly higher and the steam temperature profile was similar, the gas temperatures were also lower. This combination yields similar heat flux conditions and ultimately similar metal temperatures.

Boiler System Modifications. It is recommended that the Boiler Island be inspected for potential air leaks into the system and should be sealed to minimize any infiltration. Special attention should be given to all penetrations including seal boxes for convective surfaces, sootblowers, wallblowers, expansion joints, ductwork, fuel piping, fans and windbox. Additionally, new recycle gas ductwork would have to be provided. A new oxygen heater, parallel feedwater heater, and booster fan would also be provided.

Steam Cycle System. The steam cycle system for Concept B was modified slightly with the addition of a low-pressure feedwater heater arrangement in parallel with two low pressure extraction feedwater heaters. The parallel feedwater heater was used to recover additional sensible heat in the flue gas as a result of reduced air heater performance with oxygen firing. The modified steam cycle system produces 463,056 kW with a steam turbine heat rate of 8089 Btu/kWh.

Carbon Dioxide Separation and Compression System. The flue gas stream leaving the flue gas desulfurization system is cooled to 100°F in a direct contact gas cooler. The flue gas stream leaving the cooler is split into two streams with about two thirds recycled back to the boiler and the remaining one third feeding the CO_2 compression and liquifaction system. Because of the oxygen firing of the boiler, the flue gas stream has high enough CO_2 content that simple compression, refrigeration, and rectification can produce a suitable CO_2 product. The system recovers about 94% of the CO_2 with separation occurring between –21 and -48 ^{o}F and 346 psig. Auxiliary power requirements for the system are 57764 kW. The plot plan required is about 3 acres for the CO_2 liquefaction and compression, and direct contact cooling systems. The ultimate CO_2 liquid product for this study concept was found to have the following characteristics: CO_2 = 97.8 vol. %; N_2 = 1.2 vol.%; SO_2 = 215 vppm; O_2 = 9300 vppm; temperature = 82 ^{o}F; and pressure = 2000 psig. The concentration of oxygen in this product is too high for current pipeline operating practices, due to the corrosive nature of the oxygen. Hence, design of the transport pipe to an EOR site for example would have to take this characteristic under consideration.

Concept C: CO_2 Separation by MEA/MDEA Absorption

In Concept C, coal is burned conventionally in air. An ABB designed process comprising an optimized mixture of monoethanolamine (MEA) and methydiethanolamine (MDEA), installed downstream of the flue gas desulfurization unit, is integrated into the power plant to strip CO_2 from the effluent gas stream (containing about 15% CO_2 by volume). The mixture of MEA and MDEA cannot be made to be oxygen-resistant. Therefore, while this process potentially offers an improved system from the standpoint of solvent regeneration energy requirement, it is necessary that the excess oxygen in the flue gas be converted to CO_2 by combustion with natural gas over a De-Oxy catalyst upstream of the solvent contactor.

Overall System Description. A simplified process flow diagram for the modified unit is shown in Figure 8. The operation and performance of the existing Boiler, ESP, and FGD systems are identical to the Base Case and are not affected by the addition of the MEA/MDEA based CO_2 removal system. Heat recovery is provided in the De-Oxy system by generation of high pressure superheated steam, which is expanded through a new steam turbine for additional power generation. The exhaust from this turbine provides part of the feed for the reboilers of the MEA/MDEA system. The de-oxygenated flue gas leaving the De-Oxy system is supplied to the MEA/MDEA system where about 91% of the CO_2 is removed, compressed, liquefied, and is available for usage or sequestration. The remaining flue gases leaving the new MEA/MDEA system absorber, consisting of primarily, nitrogen, water vapor, carbon dioxide, and relatively small amounts of sulfur dioxide and methane, is discharged to the atmosphere through stacks above the absorbers.

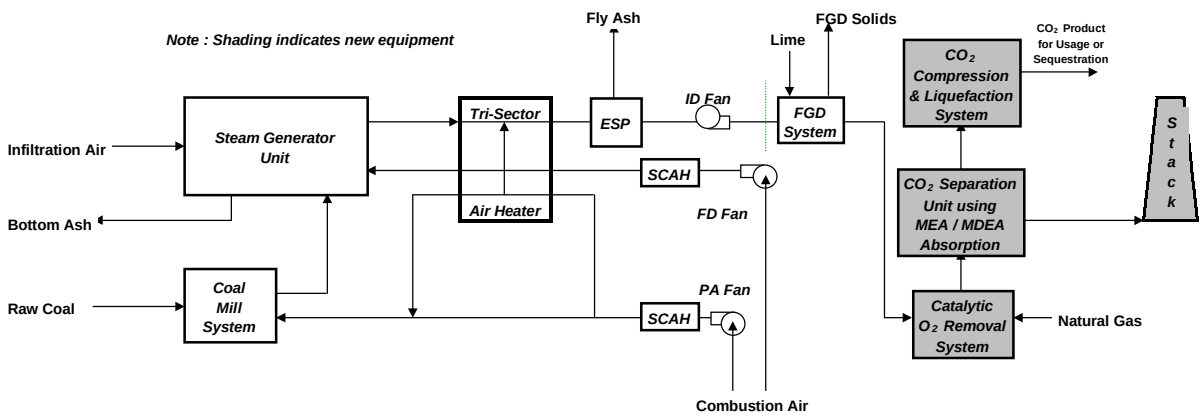

Figure 8: Simplified Gas Side Process Flow Diagram for CO_2 Separation by MEA/MDEA Absorption (Concept C)

Boiler performance for this case was identical to the Base Case. Boiler efficiency was 88.13%. The net plant heat rate increased significantly to 14,916 Btu/kWh due to steam cycle changes and increased auxiliary power, which is equivalent to an overall plant thermal efficiency of about 22.9% or about 65% of the Base Case. The total auxiliary power is increased to 89,738 kW and the net plant output was reduced to 341,551 kW. Fuel heat input to the overall system is increased by about 20% as compared to the Base Case. The fuel heat input to the boiler is the same as in the Base Case and Concept A; however, the De-Oxy system consumes a significant quantity of natural gas. Carbon dioxide emission was 89,915 lbm/hr, or about 0.263 lbm/kWh (about 13% of the Base Case).

Steam Cycle Modifications and Performance. The steam cycle system for Concept C is modified as described below. About 45% of the IP turbine exhaust is extracted from the IP/LP crossover pipe. This steam is expanded to about 65 psia through a new letdown steam turbine generating 36,343 kW. The exhaust from the letdown turbine, at about 478 ^{o}F, is de-superheated and then provides most of the heat requirement for the reboilers of the MEA/MDEA CO_2 capture system. High temperature heat recovery is provided in the De-Oxy system between two catalytic combustors by the generation of high pressure

superheated steam. This steam is then expanded through a second new steam turbine for additional power generation. This turbine generates 37,751 kW. The exhaust from this turbine provides about 20% of the feed for the reboilers of the MEA/MDEA system. Low temperature heat recovery is provided in the De-Oxy system with a low pressure feedwater heater which is located in a feedwater stream which is in parallel with the three existing low pressure extraction feedwater heaters. The modified existing steam cycle system produces 357,196 kW. The total output from the modified steam cycle is 431,290 kW. This represents a gross output reduction of 32,188 kW, which is about 7% of the Base Case output.

Carbon Dioxide Separation and Compression System. CO_2 recovery from the flue gas is accomplished by using a combination of primary and tertiary amines. They are specifically chosen to be more energy efficient to remove the absorbed CO_2. Another difference between the amines used in this concept and in Concept A is that the amines need not be oxygen resistant. The need for oxygen resistance is no longer necessary because the oxygen is converted to CO_2 by combustion with natural gas over a De-Oxy catalyst upstream of the amine contactor. After the carbon dioxide is extracted, it is liquefied by compression and refrigeration. The system recovers about 91% of the CO_2. Auxiliary power requirements for the system are 61,898 kW. The plot plan required for this equipment is about 7 acres. The ultimate CO_2 liquid product in this study was found to have the following characteristics: CO_2 = 99. 97 vol. %; N_2 = 0.03 vol.%; temperature = 82 ^{o}F; and pressure = 2000 psig. This product would meet the specifications for current pipeline practices.

COMPARISON WITH PRIOR WORK

Table 1 summarizes the pertinent technical results determined in this study. Figures 9 and 10 compare net plant heat rates and CO_2 emissions for this study with selected results from the literature (3,4). This study shows a significantly greater impact on net plant heat rate, for the MEA process, than David and Herzog show. A partial explanation for this difference can be seen in Figure 10. The present work shows higher CO_2 removal (kg/kWh) than David and Herzog show. With respect to oxy-fuel firing, it is seen that producing the oxygen in a ceramic membrane system leads to an improvement in net plant heat rate of more than 20% over the cases whereby the cryogenic method is used to produce oxygen (e.g., 10501 vs. 13796 Btu/kWh).

Table 1
Summary of Performance for Existing and CO_2 Capture Study Cases

Quantity	(Units)	Original Plant (Base Case)	Concept 3A MEA	Concept 3B O2 Fired	Concept 3C MEA/MDEA
Boiler Paramaters					
Coal Heat Input (HHV)	(10^6 Btu/hr)	4228.7	4228.7	4140.0	4228.7
Natural Gas Heat Input (HHV; De-Oxy System)	(10^6 Btu/hr)	---	---	---	866.0
Total Fuel Heat Input (HHV)	(10^6 Btu/hr)	4228.7	4228.7	4140.0	5094.7
Boiler Efficiency	(percent)	88.13	88.13	90.47	88.13
Steam Cycle Paramaters					
Existing Steam Turbine Generator Output	(kW)	463478	269341	463056	357196
CO_2 Removal System Turbine Generator Output	(kW)	---	62081	---	36343
De-Oxy System Turbine Generator Output (Concept C)	(kW)	---	---	---	37751
Total Turbine Generator Output	(kW)	463478	331422	463056	431290
Total Auxiliary Power	(kW)	29700	70665	183365	89738
Net Plant Output	(kW)	433778	260757	279691	341551
Overall Plant Performance Paramaters					
Net Plant Efficiency (HHV)	(fraction)	0.350	0.210	0.231	0.229
Normalized Efficiency (HHV; Relative to Base Case)	(fraction)	1.000	0.601	0.659	0.654
Net Plant Efficiency (LHV)	(fraction)	0.367	0.220	0.241	0.242
Net Plant Heat Rate (HHV)	(Btu/kWh)	9749	16217	14802	14916
Net Plant Heat Rate (LHV)	(Btu/kWh)	9309	15485	14134	14107
Overall Plant Emissions					
Carbon Dioxide Emissions	(lbm/h)	866102	31049	51702	89915
Specific Carbon Dioxide Emissions	(lbm/kWh)	1.997	0.119	0.185	0.263
Normalized CO2 Emissions (Relative to Base Case)	(fraction)	1.000	0.060	0.093	0.132
Avoided Carbon Dioxide Emissions (as compared to Base)	(lbm/kWh)	---	1.878	1.812	1.733
Specific Carbon Dioxide Emissions	(kg/kWh)	0.906	0.054	0.084	0.120
Avoided Carbon Dioxide Emissions (as compared to Base)	(kg/kWh)	---	0.852	0.823	0.787

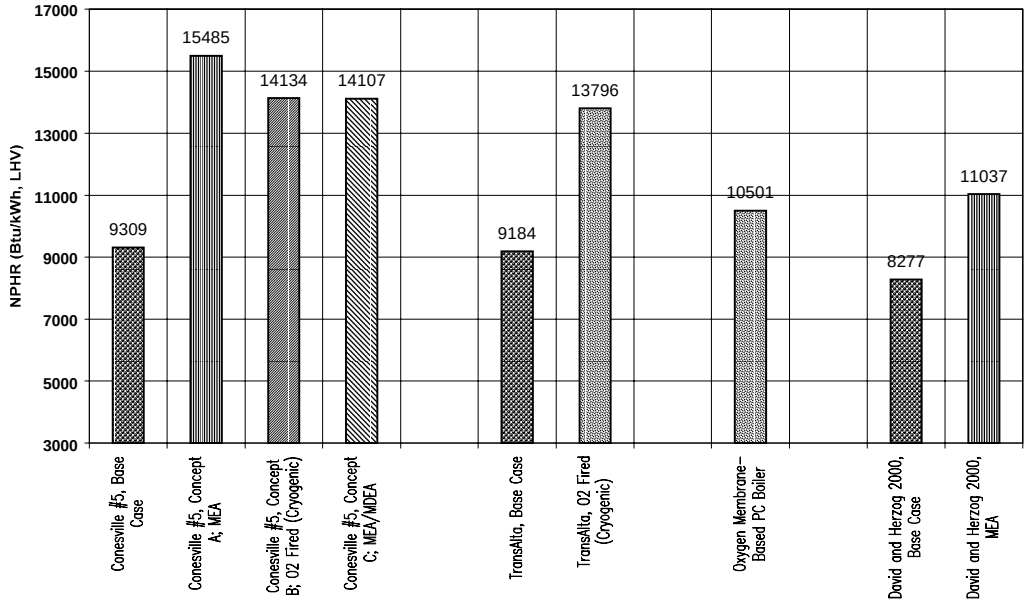

Figure 9: Comparative Coal Power Net Plant Heat Rate Results

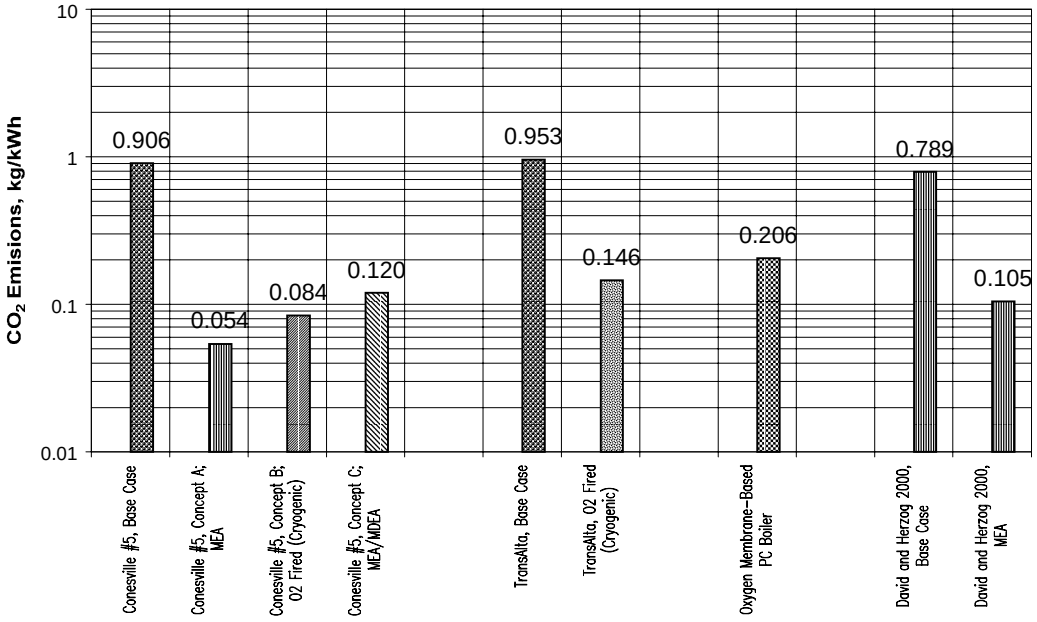

Figure 10: Comparative Coal Power CO_2 Emissions

SUMMARY AND CONCLUSIONS

- No major technical barriers exist for retrofitting AEP's Conesville Unit #5 to capture CO_2 for any of the three concepts considered under this study
- Nominally, 5-7 acres of new equipment space is needed and is approximately 1500 feet from the Unit #5 stack on the existing ~200 acre power plant site.
- Energy requirements and power consumption are high, resulting in significant decrease in overall power plant efficiencies (HHV basis), ranging from 21 to 24% as compared to 35% for the Base Case.
- Specific carbon dioxide emissions were reduced from about 2 lbm/kWh for the Base Case to 0.12 – 0.26 lbm/kWh for the study cases. Recovery of CO_2 ranged from 91 to 96%.

ACKNOWLEDGMENTS

The authors appreciatively acknowledge the following people for their contributions to the successful performance of the work presented herein: Mark Borman and Tom Ross of AEP Conesville Plant for providing field unit information; Michelle Fugate, Lorraine Miemiec, and Roland Tetreault of ALSTOM Power's Boilers and Environment Segment for providing FGD performance prediction, boiler performance prediction, and design graphics, respectively. The financial support of this project by OCDO (Contract No CDO/D-98-8), DOE National Energy Technology Laboratory (Contract No DE-FC26-99FT40576), ALSTOM Power Inc. and ABB Lummus Global Inc. is also appreciated. The in-kind financial support of the project by American Electric Power is greatly appreciated.

REFERENCES

1. Barchas, R. and Davis, R., "The Kerr-McGee/Lummus Crest Technology for the Recovery of CO_2 from Stack Gases," Presented at the First International Conference on Carbon Dioxide Removal, Amsterdam, The Netherlands, March 4-6, 1992

2. Dakota Gasification Company, "Carbon Dioxide Specifications," http://www.dakotagas.com/specs/co2spec.htm

3. Davis, J. and Herzog, H., "The Cost of Carbon Capture," Presented at the MIT Sequestration Forum, Cambridge, MA, October 31 – November 1, 2000

4. Palkes, M., Liljedahl, G., Nsakala, N., McDonald, M., and Gupta, J.C., "Preliminary Design of a CO_2/O_2 Combustion Retrofit To an Existing Coal-Fired Boiler for CO_2 Extraction,' Presented at Electric Power Gen '99 Conference, Baltimore, MD, April 20-22, 1999