the ENERGY lab

TECHNOLOGY TRANSFER

SUCCESS STORY

NETL's Clay-Liquid CO_2 Removal Sorbent Wins 2009 R&D 100 Award

On July 20, 2009, the editors of *R&D Magazine* announced the winners of the 47th Annual R&D 100 Awards. The awards recognize the 100 most technologically significant products introduced into the marketplace over the past year. These products, in the editors' view, "meet societal, scientific, or business challenges facing us today—and tomorrow." The NETL Clay-Liquid CO_2 Removal Sorbent was selected in the category of Environmental Science and represents a significant step forward in the development of cost-effective carbon capture and sequestration technologies.

Summary

Fossil fuels supply more than three-fourths of the world's energy needs and, in the United States, account for more than 70 percent of electric power generation. The low cost of fossil fuel, especially coal, is offset by relatively high emissions of carbon dioxide (CO_2), a leading greenhouse gas (GHG). To continue using fossil fuels for power generation while reducing CO_2 emissions, it is imperative to develop cost-effective capture and sequestration technologies for conventional stationary power plants. Currently, the entire flue gas stream cannot be readily sequestered. As a result, the CO_2 must be separated from the flue gas. NETL's Clay-Liquid CO_2 Removal sorbents achieve that goal at lower temperatures and at less cost than the energy-intensive aqueous solutions currently being considered.

Description

Separation and capture of CO_2 from flue gas is arguably the most difficult and costly aspect of the entire sequestration process, and is generally estimated to represent three-fourths of the total cost of managing CO_2. One conventional technology being evaluated is the use of a liquid amine process to scrub CO_2 from flue gas. The sorbent is an aqueous solution of amine that is limited to 20–30 weight percent due to corrosion problems. The amine solution is cycled between a sorption unit which captures the gas and a regenerator which releases a concentrated stream of CO_2 for sequestration. During the CO_2 recovery and sorbent regeneration process, both water and amine must be heated to about 120 °C, causing some of the water to be vaporized. Because of this, the regeneration energy required for any aqueous amine process is high, making it an expensive process. In addition, in the liquid-amine process, CO_2 gas loading must be limited, due to corrosion issues, which requires large vessel sizes, high capital costs, and parasitic pumping losses from high circulation rates. Additionally, the use of aqueous solutions contributes to high regeneration and waste water treatment costs.

CONTACTS

Ranjani Siriwardane
Research Group Leader
National Energy Technology Laboratory
3610 Collins Ferry Road
P.O. Box 880
Morgantown, WV 26507-0880
304-285-4513
ranjani.siriwardane@netl.doe.gov

George Richards
Focus Area Leader
National Energy Technology Laboratory
3610 Collins Ferry Road
P.O. Box 880
Morgantown, WV 26507-0880
304-285-4458
george.richards@netl.doe.gov

Jessica Sosenko
Technology Transfer Program Manager
National Energy Technology Laboratory
626 Cochrans Mill Road
P.O. Box 10940
Pittsburgh, PA 15236-0940
412-386-7417
jessica.sosenko@netl.doe.gov

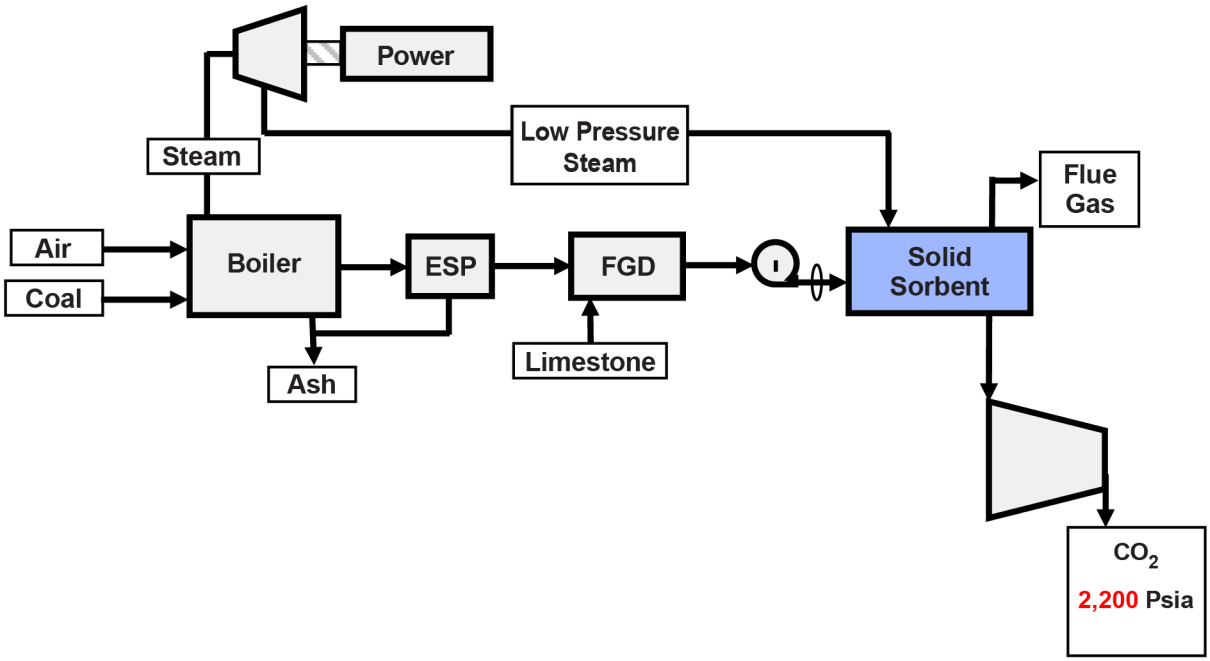

Figure 1. Pulverized coal combustion power plant system with solid sorbent CO_2 capture

NETL's new product eliminates the use of energy-intensive aqueous solutions and substitutes a low-cost, readily-available sorbent with a much lower specific heat capacity. The sorbent incorporates amines or other polar liquids in a clay matrix. Clays can retain large quantities of polar liquids, such as water and amines, between their unit layers. Yet they are naturally occurring, low-cost materials with lower specific heat capacities than water. The NETL liquid-impregnated clay sorbent is capable of capturing CO_2 in the presence of water vapor at 30–60 °C and can be regenerated at lower temperatures of around 80–100 °C. The novel sorbent can be placed in a capture unit that is down-stream of the flue gas desulfurization unit to minimize the interactions with the strong acid gas contaminants (Figure 1).

In the NETL process, flue gas flows through a bed of sorbent which, after CO_2 capture, is transported to a regenerator. Regeneration is readily accomplished by stripping with steam or CO_2 gas at about 100 °C, providing a concentrated CO_2 stream ready for sequestration. Preliminary testing has identified several features of this new material, such as the ability to strip the sorbent with a recycled CO_2 stream to obtain a concentrated CO_2 stream, its resistance to degradation, and a significant reduction in regeneration energy over the aqueous amine sorbent.

NETL researchers have identified several reactor configurations using solid sorbents for CO_2 capture from post-combustion gas streams. One of these, a dilute-phase, fluidized bed (transport reactor), is projected to have a low pressure drop during the absorption step. The regenerator could then be fluidized by either recycled, hot CO_2 or steam. The fluidizing CO_2 is available at high pressure from the compression process, so that even modest pressure drops can be readily tolerated. With this design, much of the solids transport duty is internally available to the system and the solids handling and transport costs will be minimal. However, flow reactor tests with sorbent formulations prepared for both fixed-bed and fluid-bed reactor applications using simulated flue gas have shown promising results at both NETL and an external industrial laboratory, ADA Environmental Solutions.

The NETL's liquid-impregnated clay sorbent is available in either small particle sizes (<200 microns) suitable for fluidized bed, or large particle sizes (1mm) suitable for moving bed or fixed bed reactor operations. Commercial scale sorbent batches (Figures 2 and 3) have been prepared at Süd-Chemie Inc. utilizing the NETL procedures.

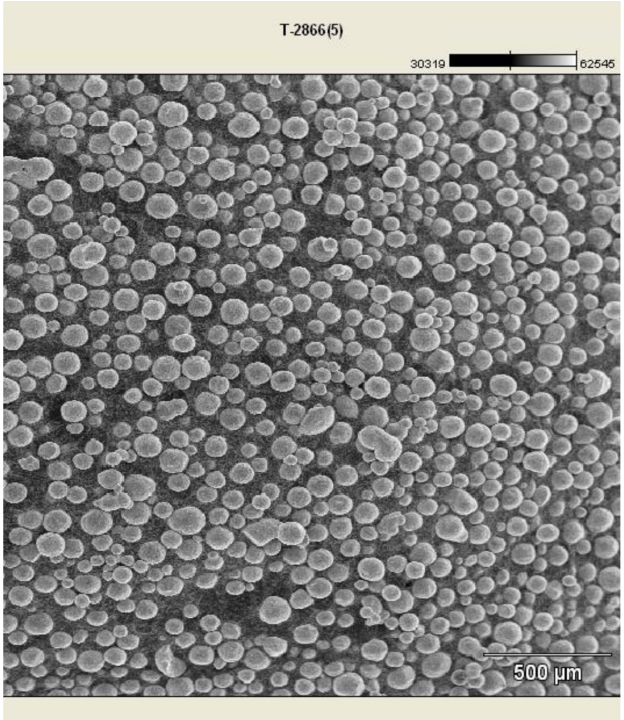

Figure 2 - Spray dried formulations by Süd-Chemie Inc. suitable for fluidized bed/transport reactors (Average particle size 80 microns)

Figure 3 - Extrudates and pellets prepared at commercial scale by Süd-Chemie Inc. that are suitable for moving bed or fixed bed reactors.

Significance/Benefits

A preliminary system analysis conducted at the U.S. Department of Energy's NETL indicated that the regeneration energy required for a liquid impregnated-clay sorbent was 2.5 times lower than that for the liquid-amine process. Calculations show cost savings of $15 million per year in a base case [550 MW] power plant, which would amount to $450 million over the 30-year lifespan. With a nameplate capacity for coal-based power plants of over 300,000 MW, annual savings on a nationwide level would approach $8 billion dollars if all plants had such capture units.

The NETL sorbents offer the following benefits in a carbon capture application:

1. Able to absorb CO_2 at 40-60 °C and can be regenerated at 80-100 °C.
2. Requires significantly lower regeneration energy than current commercial technology.
3. Available for moving bed operation and fluidized bed reactor operations.
4. Features low cost materials and a low cost preparation procedure.
5. Stable toward deactivation during 25 sorption/regeneration cycles in the presence of 20 ppm SO_2.
6. Presence of moisture does not affect the sorbent performance.
7. Provides enhanced CO_2 capture capacity on a w/w basis.

Opportunities

The product can remove CO_2 from gas streams from fossil fuel fired power plants, including new and existing units, while meeting operational and system requirements at a reduced cost.