the ENERGY lab

PROJECT FACTS

Fuels

Novel, Magnetically Fluidized-Bed Reactor Development for the Looping Process: Coal to Hydrogen Production Research and Development

Background

The U.S. Department of Energy (DOE) National Energy Technology Laboratory (NETL) is committed to improving methods for co-producing power and chemicals, fuels, and hydrogen (H_2). Gasification is a process by which fuels such as coal can be used to produce synthesis gas (syngas), a mixture of H_2, carbon monoxide (CO), and carbon dioxide (CO_2). The syngas is then cleaned to remove impurities and further processed to produce power, hydrogen, and chemicals. Co-production of power and chemicals, fuels, and hydrogen from coal is becoming more beneficial and necessary in the United States due to an increasing need for domestic sources of fuel, more efficient use of resources, and more environmentally benign methods of production. To this end, NETL is partnering with the University of Florida to develop a novel, alternative method for simultaneous production of hydrogen and CO_2 isolated from syngas.

This project addresses the need for producing streams of high-purity hydrogen and sequestration-ready CO_2 from coal with a comprehensive research and development program based on a unique, magnetically fluidized-bed reactor with significant throughput using the lower temperature (400–800 Kelvin) iron-based chemical looping process. Such a step forward would allow CO_2 to be effectively captured, thus providing the U.S. marketplace with a new technology to cleanly utilize one of its most abundant energy resources, coal.

Project Description

University of Florida researchers will develop a novel, magnetically-assisted, fluidized-bed reactor that uses a chemical looping process with metal oxide sorbents to separate H_2 from coal-derived syngas. Chemical looping is a strategy for extracting high-purity H_2 and isolating sequestration-ready CO_2 from syngas under typical gasification operating conditions. This process will be evaluated as a potential way to improve thermal efficiency over more traditional gas separation methods that operate at low temperatures and pressures.

A pair of reactors will be positioned in a push-pull arrangement—with one reactor configured in an oxidation mode and the other in a reduction mode—in association with a coal gasifier. The oxidation mode involves splitting water (H_2O) into H_2 and an oxygen carrier. In the reduction mode, the oxygen carrier separates the syngas from

CONTACTS

Steven R. Markovich
Project Manager
National Energy Technology Laboratory
626 Cochrans Mill Road
P.O. Box 10940
Pittsburgh, PA 15236-0940
412-386-7537
steven.markovich@netl.doe.gov

James F. Klausner
University of Florida
Department of Mechanical and Aerospace Engineering
Gainesville, Florida 32611
352-392-3506
klaus@ufl.edu

Daniel Driscoll
Hydrogen & Syngas Technology Manager
National Energy Technology Laboratory
3610 Collins Ferry Road
P.O. Box 880
Morgantown, WV 26507-0880
304-285-4717
daniel.driscoll@netl.doe.gov

PROJECT DURATION

Start Date
10/1/2009

End Date
9/30/2012

COST

Total Project Value
$1,249,900

DOE/Non-DOE Share
$999,920 / $249,980

the gasifier stream to produce CO_2 and H_2O. The H_2O and oxygen are cycled back and forth between the processes. Excess heat is used in a heat exchanger and gas turbine arrangement to heat and expand the syngas stream from the gasifier before it is fed into the reactors' fuel cycles. Metal oxide sorbents with magnetic properties will be studied for the potential to reduce pressure drop, provide more uniform solids distribution, and to aid in solids transport within fluidized-bed reactors.

A two-phase, combined experimental and simulation-and-modeling approach will be implemented. Phase I will be a fundamental investigation of chemical, heat, mass, and momentum transport within a laboratory-scale, magnetically fluidized-bed chemical looping reactor. Researchers will evaluate the physical limitations of a magnetically fluidized bed and develop a model/simulation tool for scaling up the reactor concept. If the results of Phase I show that the process has potential to meet DOE program objectives for hydrogen production, Phase II will provide for design and fabrication of a bench-scale apparatus which will operate over a range of commercially relevant conditions in order to further assess the process viability.

Goals and Objectives

TThe objective of the project is to develop a novel, magnetically fluidized-bed, chemical looping reactor concept for efficiently and effectively processing coal-gasification syngas to generate discrete, high-purity streams of H_2 and sequestration-quality CO_2. Researchers will investigate the magnetically fluidized-bed reactor configuration, the efficiency and scalability of the process, and the performance of metal oxide particulate as a bed component. The research team will determine the viability of the concept for scale-up and integration into a coal gasification facility for producing commercial quantities of hydrogen.

Specific Phase I research and development objectives include (1) determining optimal reaction pathways and operating conditions for iron and alloyed iron metal oxide powders in both reducing and oxidizing environments; (2) developing a laboratory scale magnetic fluidized bed reactor facility, (3) evaluating the chemical kinetics for driving the looping process, (4) characterizing chemical, thermal, and fluid transport properties of a magnetically fluidized-bed reactor for separating hydrogen and carbon dioxide; (5) measuring powder particle scale properties; and (6) developing a numerical simulation and modeling for the design and analysis of magnetically fluidized hydrogen production reactors.

Benefits

This potential alternative method for obtaining highly pure H_2 and sequestration-ready CO_2 using coal-derived syngas may help the nation achieve DOE goals for co-production of energy and hydrogen with carbon removal, resulting in cleaner air and reduced greenhouse emissions. Improvements in the efficient use of coal gasification to co-produce power and chemicals, fuels, and hydrogen will improve U.S. energy security, affordability, and environmental stewardship.

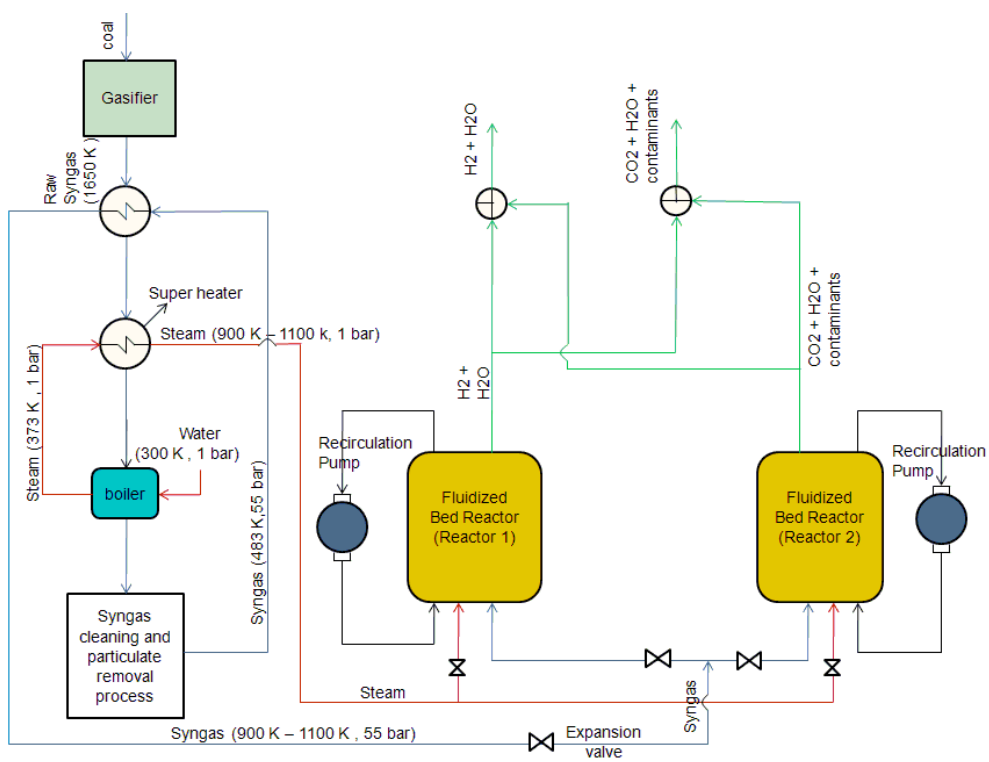

Chemical looping reactor flow process diagram.