FILE COPY

U.S. DEPARTMENT OF ENERGY
PITTSBURGH ENERGY TECHNOLOGY CENTER

DIRECT COAL LIQUEFACTION
LOW RANK COAL STUDY

CONTRACT NO. DE-AC22 90PC89857

FINAL REPORT
ON
DESIGN, CAPITAL COST AND ECONOMICS
FOR THE LOW RANK COAL STUDY

VOLUME 1B

FEBRUARY 1995
PITTSBURGH, PENNSYLVANIA

Bechtel

3000 Post Oak Boulevard
Houston, Texas 77056-6503
Mailing address: P.O. Box 2166
Houston, Texas 77252-2166

February 13, 1995

U. S. Department of Energy
Pittsburgh Energy Technology Center
Mail Stop 922-H
P. O. Box 10940
Pittsburgh, PA 15236

Attention: Dr. E. B. Klunder
Project Manager

Subject: D.O.E. Coal Liquefaction
Low Rank Coal Study
Contract No. DE-AC22 90PC89857
Bechtel Job No. 20952-003
Final Report on Design, Capital Cost and Economics for Low Rank Coal
Letter No. BLD-037LRC

Dear Dr. Klunder:

Attached are two copies of Volume IB of the subject multi-volume final report. Please note that this report titled "Design, Capital Cost and Economics for Low Rank Coal", is a stand-alone report in two volumes (1-A and 1-B) and contains the results of the study. Also included are two copies of the appendices published in two parts. Part 1 contains appendices A through C and Part II contains appendices D through H.

Copies to other members of DOE, as requested by the contract, are sent directly to each of them. If you have any questions or comments, please contact me.

Sincerely yours,

Syamal K. Poddar
Project Manager

Attachment

cc: Martin Byrnes, DOE/PETC
Edward Schmidt, DOE/PETC
R. Kaplan, AMOCO
File
Gilbert V. McGurl, DOE/PETC
Sai V. Gollakota, Burns & Roe

THE INFORMATION AND DATA CONTAINED IN THIS REPORT ARE THE RESULT OF AN ECONOMIC EVALUATION AND A PRELIMINARY DESIGN EFFORT AND BECAUSE OF THE NATURE OF THIS WORK NO GUARANTEES OR WARRANTIES OF PERFORMANCE, WORKMANSHIP, OR OTHERWISE ARE MADE, EITHER EXPRESSED OR BY IMPLICATION.

TABLE OF CONTENTS

TABLE OF CONTENTS

DESIGN, CAPITAL COST AND ECONOMICS FOR THE LOW RANK COAL STUDY

VOLUME 1A
SECTIONS 1 - 13

1. Introduction and Scope of Study 1-1

2. Overall Design Considerations 2-1

   2.1 Design Basis and Criteria
   2.2 Plant Configuration

3. Overall Material and Utilities Balances 3-1

   3.1 Overall Material Balance
   3.2 Overall Utility Balance

4. Overall Flow Distributions 4-1

   4.1 Overall Hydrogen Flow Distribution
   4.2 Overall Water Flow Distribution

5. Plant 1 (Coal Crushing and Grinding) 5-1

   5.0 Design Basis, Criteria and Considerations
   5.1 Process Description, Block Diagram and Process Flow Diagram
   5.2 Material Balance
   5.3 Major Equipment Summary
   5.4 Utility Summary

6. Plant 1.4 (Coal Slurry Drying) 6-1

   6.0 Design Basis, Criteria and Considerations
   6.1 Plant Description and Process Flow Diagram
   6.2 Material Balance
   6.3 Major Equipment Summary
   6.4 Utility Summary

7. Plant 2 (Coal Liquefaction) 7-1

   7.1 Design Basis, Criteria and Considerations
   7.2 Process Description and Process Flow Diagrams

TABLE OF CONTENTS

DESIGN, CAPITAL COST AND ECONOMICS FOR THE LOW RANK COAL STUDY

VOLUME 1B
SECTIONS 14 - 30

14. Plant 10 (Air Separation) 14-1

14.0 Design Basis Criteria and Considerations
14.1 Process Description and Process Flow Diagram
14.2 Material Balance
14.3 Major Equipment Summary
14.4 Utility Summary
14.5 Water Summary

15. Plant 11 (By-Product Sulfur Recovery) 15-1

15.0 Design Basis Criteria and Considerations
15.1 Process Description and Process Flow Diagram
15.2 Material Balance
15.3 Major Equipment Summary
15.4 Utility Summary
15.5 Water Summary

16. Plant 31 (Steam and Power Generation) 16-1

16.1 Design Basis Criteria and Considerations
16.2 Process Description and Process Flow Diagram
16.3 Overall Steam Balance
16.4 Major Equipment Summary
16.5 Utility Summary

17. Plant 32 (Raw, Cooling and Potable Water Systems) 17-1

17.1 Design Basis Criteria and Considerations
17.2 Process Description and Block Flow Diagram
17.3 Major Equipment Summary
17.4 Utility Summary

Design, Capital Cost and Economics for The Low Rank Coal Study
Table of Contents - continued

18. Plant 38 (Ammonia Recovery) 18-1

18.1 Design Basis Criteria and Considerations
18.2 Process Description and Process Flow Diagram
18.3 Major Equipment Summary
18.4 Utility Summary

19. Plant 39 (Phenol Recovery) 19-1

19.1 Design Basis Criteria and Considerations
19.2 Process Description and Process Flow Diagram
19.3 Overall Material Balance
19.4 Major Equipment Summary
19.5 Utility Summary

20. Plant 21 (Interconnecting Piping Systems) 20-1

20.1 Design Basis Criteria and Considerations
20.2 Plant Description

21. Plant 25 (Chemical and Catalyst Handling) 21-1

21.1 Design Basis Criteria and Considerations
21.2 Plant Description
21.3 Major Equipment List
21.4 Utility Summary
21.5 Chemical and Catalyst Summary

22. Plant 35 (Instrument and Plant Air Facilities) 22-1

22.1 Design Basis Criteria and Considerations
22.2 Plant Description
22.3 Major Equipment List
22.4 Utility Summary

23. Option 6 (Steam Reforming of Natural Gas Plus FBC Unit for Hydrogen Production) 23-1

23.1 Design Basis, Criteria and Considerations

23.2 Process Description and Process Flow Diagram for the Directly Affected Plants
23.3 Material Balance
23.4 Utility Balance for the Directly Affected Plant
23.5 Overall Impact

23.5.1 Overall Plant Configuration and Material Balance
23.5.2 Overall Utility Summary
23.5.3 Overall Water Flow Distribution
23.5.4 Overall Hydrogen Flow Distribution

24. Overall Capital Costs for the Low Rank Coal Study and the Option 6 Case 24-1

24.1 ISBL Plant Field Cost Summaries
24.2 OSBL Plant Field Cost Summaries

25. ASPEN/PLUS Process Simulation Model of the Low Rank Coal Case and Option 6 (Steam Reforming of Natural Gas plus FBC Unit for Hydrogen Production) 25-1

25.1 General Description
25.2 Comparison of Model Predictions with Low Rank Coal Study
25.3 Comparison of Model Predictions with Low Rank Coal Design with Hydrogen Production by Steam Reforming of Natural Gas

26. Overall Raw Material, Catalyst and Chemical Costs 26-1

27. Overall Utility Unit Prices and Consumptions 27-1

28. Overall Product/By-product Values (Low Rank Coal) 28-1

29. Overall Labor Requirements and Rates 29-1

29.1 Staffing Plan
29.1.1 Low Rank Coal Liquefaction with Hydrogen Production by Coal Gasification
29.1.2 Low Rank Coal Liquefaction with Hydrogen Production by Natural Gas Reforming
29.2 Base Wages and Salaries

30. Economics 30-1

30.1 Lotus Spreadsheet Economics Model

30.2 Key Assumptions
30.3 Results
30.4 Sensitivities on Economics

31. Discussion 31-1

32. References 32-1

APPENDICES A THROUGH H

PART I

Appendix A Aspen Plus Process Simulation Model Input File for Low Rank Coal Study - Hydrogen Production by Coal Gasification A-1

Appendix B Aspen Plus Direct Coal Liquefaction Process Simulation Model Fortran User Block Models B-1

Appendix C Aspen Plus Process Simulation Model Input File for Low Rank Coal Study - Hydrogen Production by Steam Reforming of Natural Gas C-1

PART II

Appendix D Management Summary report for Low Rank Coal Study D-1

Appendix E Management Summary Report for Low Rank Coal - Hydrogen Production by Steam Reforming of Natural Gas E-1

Appendix F Miscellaneous File Listings - F-1
The DCLRPT.BAT file
The DCLSTART.REP file

Appendix G Low Rank Coal - Hydrogen Production by Coal Gasification
Aspen Plus - Process Simulation Report G-1

Appendix H Low Rank Coal - Hydrogen Production by Steam Reforming of Natural Gas
Aspen Plus - Process Simulation Report H-1

LIST OF FIGURES

VOLUME 1A
SECTIONS 1 - 13

NUMBER	TITLE	PAGE
2.1	Overall Plant Configuration	2-2
3.1	Overall Material Balance for Low Rank Coal	3-2
4.1	Overall Hydrogen Flow Distribution	4-2
4.2	Overall Water Flow Distribution	4-3
5.1	Plants 1 & 1.4 Low Rank Coal Study	5-2
5.2	Low Rank Coal Study, Coal Crushing, Grinding and Drying	5-4
5.3	ROM Coal Receiving and Storage Section Process Flow Diagram	5-6
7.1	Slurry Preparation/Reaction	7-12
7.2	Primary Separation	7-15
7.3	Fractionation	7-16
7.4	Low Rank Coal Study Material Balance (Per Train)	7-19
8.1	Process Flow Diagram for Gas Plant (Plant 3)	8-4
8.2	Process Flow Diagram for Merox Unit (Plant 3)	8-5
9.1	Process Flow Diagram for Naphtha Hydrotreater (Plant 4)	9-3
10.1	Process Flow Diagram for Gas Oil Hydrotreater (Plant 5)	10-5
11.1	Process Flow Diagram for High Pressure H_2 Recovery (Plant 6.1)	11-4
11.2	Process Flow Diagram for Low Pressure H_2 Recovery (Plant 6.2)	11-5
11.3	Process Flow Diagram Amine Regeneration (Plant 6.2)	11-6
11.4	Process Flow Diagram COSORB Unit (Plant 6.2)	11-8
12.1	Process Flow Diagram of ROSE® Process	12-3
13.1	Block Flow Diagram - Hydrogen Production by Coal Gasification	13-6
13.2	Slurry Preparation and Gasification	13-9
13.3	Shift Reactor and Gas Cooling	13-10
13.4	Hydrogen Purification and Compression	13-11
13.5	Overall Material Balance	13-15

LIST OF FIGURES
VOLUME 1B
SECTIONS 14 - 30

14.1 Process Flow Diagram - Air Separation (Plant 10) 14-2

15.1 Process Flow Diagram - Sulfur Plant (Plant 11.1) 15-3
15.2 Process Flow Diagram - SCOT Unit (Plant 11.2) 15-6
15.3 Process Flow Diagram Incinerator (Plant 11.3) 15-8

16.1 Steam and Power Generation (Plant 31) 16-3
16.2 Overall Steam Flow Distribution (Plant 31) 16-6

17.1 Overall Raw, Clarified and Potable Water Distribution (Plant 32) 17-2
17.2 Process Flow Diagram, Raw Water Treatment (Plant 32) 17-3
17.3 Cooling Water Balance (Plant 32) 17-6

18.1 Process Flow Diagram (Plant 38) 18-4

19.1 Process Flow Sketch Dephenolization 19-3

23.1 Process Flow Diagram of Steam Reformer for Natural Gas 23-3
23.2 Process Flow Diagram for Fluidized Bed Combustor 23-4
23.3 Process Flow Diagram of Steam Turbine Generator 23-6
23.4 Hydrogen Production by Steam Reforming of Natural Gas - Plant 2 Overall Material Balance 23-10
23.5 Hydrogen Production by Steam Reforming of Natural Gas - Overall Material Balance 23-23
23.6 Hydrogen Production by Steam Reforming of Natural Gas - Overall Water Flow Distribution 23-26
23.7 Hydrogen Production by Steam Reforming of Natural Gas - Overall Hydrogen Flow Distribution 23-29

25.1 ASPEN PLUS Block Flow Diagram of the Process Simulation Model 25-2

29.1 Overall Plant Organization 29-2
29.2 Laboratory Organization and Personnel 29-3
29.3 Operations Organization and Personnel 29-4
29.4 Engineering Organization and Personnel 29-5
29.5 Environmental Safety and Security Organization and Personnel 29-6
29.6 Administrative Organization and Personnel 29-7
29.7 Maintenance Organization and Personnel 29-8
29.8 Operations Organization and Personnel for Option 6 . . . . . 29.9

LIST OF TABLES

VOLUME 1A
SECTIONS 1 - 13

NUMBER	TITLE	PAGE
2.1	ISBL Plants	2-3
2.2	OSBL Plants	2-4
3.0	Overall Material Balance - Low Rank Coal	3-3
3.1	Overall Utility Balance for Low Rank Coal Study	3-4
5.1	Coal Analysis of Low Rank Coal (Black Thunder Mine)	5-3
5.2	Size Analysis for Low Rank ROM Coal	5-5
5.3	Product Requirements for the Coal Crushing and Grinding Plant	5-5
5.4	Material Balance for Plant 1	5-7
5.5	Major Equipment List for Plant 1	5-8
5.6	Utility Requirements for Plant 1	5-9
6.1	Material Balance for Plant 1.4	6-1
6.2	Major Equipment List for Plant 1.4	6-2
6.3	Utility Requirement for Plant 1.4	6-2
7.1	Analysis of Feed Coal to Liquefaction	7-2
7.2	First Stage Yields and Product Qualities	7-3
7.3	Material Balance (per train), Plant 2	7-12
7.4	Plant 2 Utility Summary (per train)	7-14
7.5	Water Summary (per train), Plant 2	7-15
7.6	Major Equipment Summary, Plant 2	7-17
8.1	Material Balance, Plant 3	8-7
8.2	Utility Summary, Plant 3	8-8
8.3	Major Equipment Summary, Plant 3	8-9
9.1	Naphtha Hydrotreater Product Characteristics	9-1
9.2	Material Balance, Plant 4	9-5
9.3	Utility Summary, Plant 4	9-6
9.4	Water Summary, Plant 4	9-6
9.5	Major Equipment Summary, Plant 4	9-8
10.1	Feeds to the Gas Oil Hydrotreater	10-1
10.2	Products from the Gas Oil Hydrotreater	10-2

10.3 Material Balance, Plant 5 10-7
10.4 Utility Summary, Plant 5 10-8
10.5 Water Summary, Plant 5 10-9
10.6 Major Equipment Summary, Plant 5 10-11

11.1 Material Balance for Plant 6 11-10
11.2 Major Equipment Summary, Plant 6 11-12
11.3 Utility Summary, Plant 6 11-15
11.4 Water Summary, Plant 6 11-16

12.1 Material Balance for Plant 8 12-4
12.2 Major Equipment Summary, Plant 8 12-5
12.3 Utility Summary, Plant 8 12-6

13.1 Gasification Feed Streams 13-2
13.2 Gas Product Data, Gasification Plant 13-3
13.3 Material Balance for Plant 9 13-14
13.4 Major Equipment Summary, Plant 9 13-17
13.5 Utility Summary, Plant 9 13-21
13.6 Water Summary, Plant 9 13-22

LIST OF TABLES

VOLUME 1B
SECTIONS 14 - 30

14.1 Material Balance, Plant 10 14-3
14.2 Major Equipment Summary, Plant 10 14-4

15.1 Material Balance, Plant 11 15-10
15.2 Major Equipment Summary, Plant 11 15-12
15.3 Utility Summary, Plant 11 15-16

16.1 Overall Steam Balance 16-10
16.2 Major Equipment Summary, Plant 11 16-13
16.3 Plant 31 Utility Summary 16-17

17.1 Typical Raw Water Analysis 17-4
17.2 Overall CW and Make-up Water Balance 17-7
17.3 Major Equipment Summary, Plant 32 17-11
17.4 Overall Raw Water Requirement 17-14

18.1 Material Balance for Plant 38 18-2
18.2 Major Equipment Summary, Plant 38 18-7

19.1 Material Balance for Plant 39 19-4
19.2 Major Equipment Summary, Plant 39 19-5

20.1 Fuel Gas Availability 20-3
21.1 Chemical and Catalysts 21-2

23.1 Plant 1, Material Balance, Option 6 23-8
23.2 Plant 2, Material Balance, Option 6 23-9
23.3 Plant 3, Material Balance, Option 6 23-11
23.4 Plant 4, Material Balance, Option 6 23-12
23.5 Plant 5, Material Balance, Option 6 23-13
23.6 Plant 6, Material Balance, Option 6 23-14
23.7 Plant 8, Material Balance, Option 6 23-15
23.8 Plant 9, Material Balance, Option 6 23-16
23.9 Plant 11, Material Balance, Option 6 23-17
23.10 Plant 31, Material Balance, Option 6 23-18
23.11 Plant 38, Material Balance, Option 6 23-19
23.12 Plant 39, Material Balance, Option 6 23-20
23.13 Low Rank Coal Plus Option 6 Utility Requirement for Plant 9-01 23-21

23.14 Overall Material Balance Low Rank Coal, Option 6 23-24
23.15 Overall Utility Balance Low Rank Coal, Option 6 23-25
23.16 Overall CW & Make-up Water Balance Low Rank Coal, Option 6 23-27
23.17 Overall Raw Water Requirement Low Rank Coal, Option 6 23-28
23.18 Overall Steam Balance Low Rank Coal, Option 6 23-30
23.19 Overall Condensate Balance Low Rank Coal, Option 6 23-31

24.1 Low Rank Coal, Hydrogen By Coal Gasification Estimated Total Field Costs for Coal Liquefaction Complex Process Units (ISBL) 24-2
24.2 Low Rank Coal, Hydrogen by Steam Reforming Estimated Total Field Costs for Coal Liquefaction Process Units (ISBL) 24-3
24.3 Low Rank Coal Study Hydrogen by Coal Gasification Estimated Total Field Costs - Offsites/Utilities (OSBL) 24-5
24.4 Low Rank Coal Study, Hydrogen by Steam Reforming Estimated Total Field Costs - Offsites/Utilities (OSBL) 24-6
24.5 Nth Plant Capital Cost for Complex Low Rank Coal, Hydrogen by Coal Gasification 24-7
24.6 Nth Plant Capital Cost for Complex Low Rank Coal, Hydrogen by Steam Reforming 24-8

25.1 Comparison of the ASPEN PLUS Process Simulation Model with the Process Design for the Low Rank Coal Study - Hydrogen Production by Coal Gasification 25-5
25.2 Comparison of the ASPEN PLUS Process Simulation Model with the Process Design for the Low Rank Coal Case Option 6 Hydrogen Production by Steam Reforming of Natural Gas 25-6

26.1 Catalyst Chemicals Cost 26-1

27.1 Raw Material and Utility Pricing 27-1
27.2 Overall Utility Consumption 27-1

28.1 By-Product Values 28-1

29.1 Base Wages and Salaries 29-10

30.1 Economic Analysis of Low Rank Coal Case with Hydrogen Produced by Coal Gasification 30-2
30.2 Economic Analysis of Low Rank Coal Case with Hydrogen Produced by Steam Reforming 30-5
30.3 Economic Results and Sensitivities 30-8
30.4 Rate of Inflation Sensitivities on Economic Results 30-11

14. PLANT 10

14. Plant 10 (Air Separation)

14.0 Design Basis, Criteria and Considerations

The air separation package plants are cryogenic units producing oxygen at 99.5% (mol) purity and nitrogen at 99.9% (mol) purity. Oxygen will be delivered at the pressure required by the selected coal gasification process. Nitrogen will be used for purging, blanketing, and other utility purposes and will be delivered to the utility system at 150 psig. Liquid nitrogen will also be produced off the Air Separation Plant and stored for use during periods of high nitrogen demand.

14.1 Process Description and Process Flow Diagram

Air separation plant (Plant 10) is a package plant, the process flow diagram of which is shown in Figure 14.1. The plant consists of five parallel trains each sized for 46 MMSCFD of oxygen. Each train can operate independently and uses a low pressure cycle type process. The process features an air compressor to compress the inlet air, direct contact cooling to remove the heat of compression from the air, molecular sieve units to purify the air, fractionation columns to obtain the high purity gaseous oxygen, an expander compressor to provide the refrigeration needed for the process, and an oxygen compressor to pressurize the oxygen product for use in the Coal Gasification Plant.

14.2 Material Balance

The overall material balance for this plant is shown in Table 14.1. This balance is for five trains.

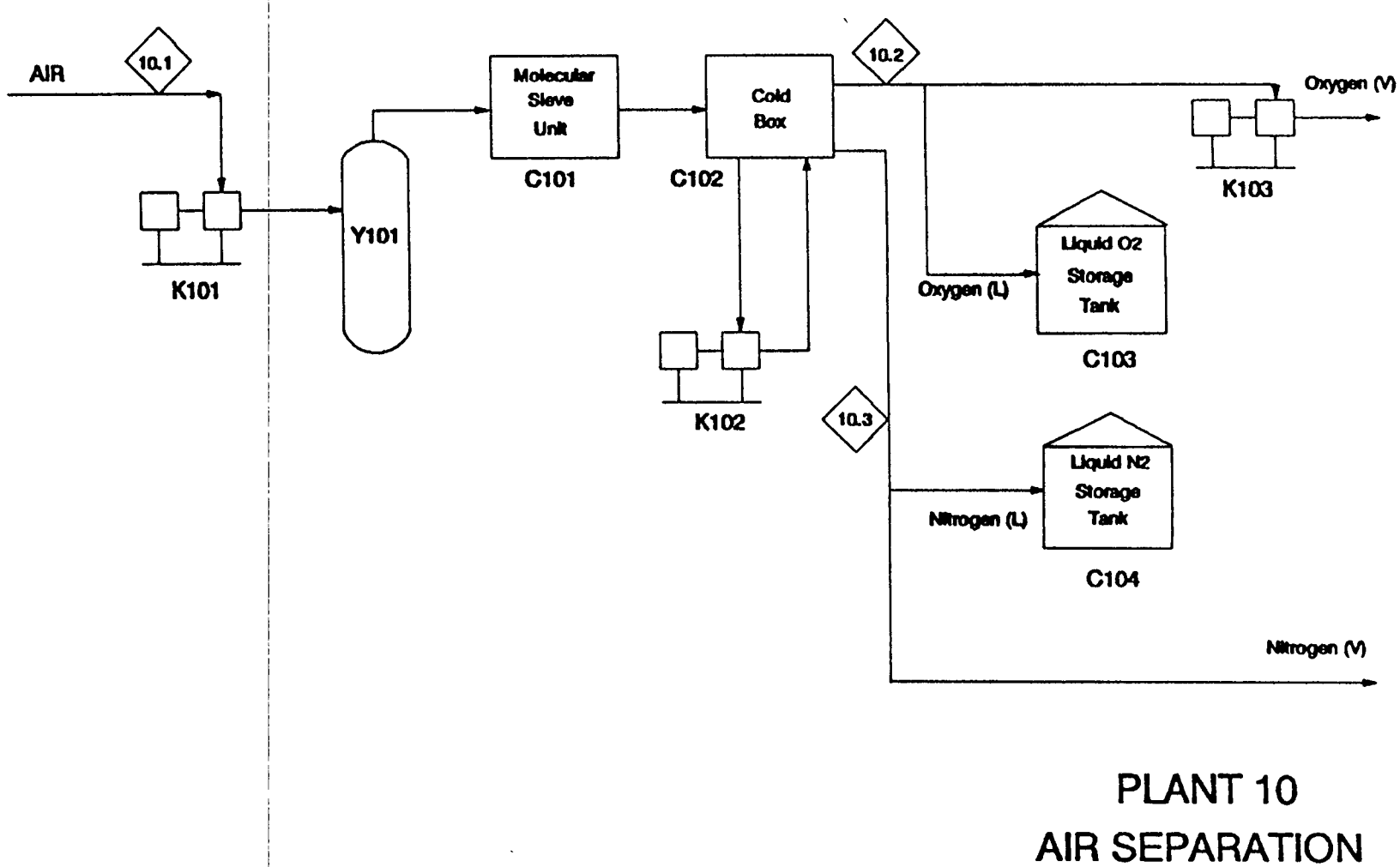

FIGURE 14.1 PROCESS FLOW DIAGRAM

Table 14.1

PLANT 10 : INPUT

Components (Lb/Hr)	10.1 Air			Total Input
H2O				
N2, Argon	2,428,230			2,428,230
O2	737,650			737,650
Total, PPH	3,165,880			3,165,880
Gas-MMSCFD	1000			1,000
Gas-MW	28.8			——

PLANT 10 : OUTPUT

Components (Lb/Hr)	10.2 Oxygen to PL-9	10.3 Nitrogen Stream		Total Output
H2O				
N2, Argon	3,231	2,424,999		2,428,230
O2	734,890	2,760		737,650
Total, PPH	738,121	2,427,759		3,165,880
Gas-MMSCFD	210	790		1,000
Gas-MW	32.0	28.0		——

LOW RANK COAL
MATERIAL BALANCE FOR PLANT 10

14.3 Major Equipm nt Summary

The major equipment summary is shown below in Table 14.2.

Table 14.2

Major Equipment Summary

Equipment Number	Equipment Description
10-C101	Molecular Sieve Unit
10-C102	Fractionation Tower (Cold Box)
10-C103	Liquid Oxygen Storage Tank
10-C104	Liquid Nitrogen Storage Tank
10-E101	Evaporative Cooler
10-G101	Circulation Pump
10-G102	Make-up Pump
10-K101	Inlet Air Compressor
10-K102	Expander
10-K103	Oxygen Compressor
10-Y101	Spray Cooler

14.4 Utility Summary

The only utility consumed by the Air Separation Plant is electric power. A summary is shown below:

Electricity, Kw	Per train	31,622
	Total	158,110

14.5 Water Summary

There is no water used in this process and no waste water produced.

15. PLANT 11

15. Plant 11 (By-Product Sulfur Recovery)

15.0 Design Basis, Criteria and Considerations

Plant Capacity

Design capacity (only one train)	113 LT/D (127 ST/D)

Yields

- Minimum sulfur recovery for Claus sulfur plant is 95%.
- Total sulfur recovery for Plant 11 is 99.9%.

Typical Sulfur Industry Specifications

• Sulfur	99.5%	minimum
• Carbon	0.2%	maximum
• Ash	50. ppm	maximum
• H2S	50. ppm	maximum
• SO_2	50. ppm	maximum
• Color	Bright yellow	
• Arsenic, Selenium, Tellurium	Commercially free	

Design Considerations

Only one Claus train was specified to achieve 100% on-line capacity.

The SCOT process was selected for the tail gas treater for the Sulfur Plant because it is a proven process and is becoming an industry standard. It meets all present environmental regulations.

15.1 Proc ss D scription and Proc ss Flow Diagram

The complete sulfur plant is comprised of three sections. These are, 1) Sulfur Plant, 2) SCOT Unit, and (3) Incinerator. The process description of each section is given below.

Sulfur Plant

The sulfur recovery plant, the description of which is shown in the Process Flow Diagram, Figure 15.1, has been designed in accordance with the principles of the classic "Claus" reaction. About one-third of the hydrogen sulfide (H_2S) in the feed is oxidized to form sulfur dioxide (SO_2) and water (H_2O). The sulfur dioxide then reacts with the remaining hydrogen sulfide to form elemental sulfur and water vapor. Ammonia (NH_3) is oxidized to nitrogen and water. In addition to the reactions noted above, a small part of the feed hydrogen sulfide dissociates to free hydrogen and elemental sulfur. Any hydrocarbons in the acid gas feed are oxidized in the thermal reactor to carbon monoxide (CO), carbon dioxide (CO_2) and water.

The acid gas and the SCOT recycle acid gas are combined and routed to the acid gas knock-out drum. The knock-out drum is designed to remove entrained sour water and condensed hydrocarbons from the acid gas streams.

The vapor stream, from the acid gas knock-out drum, is fed to the acid gas preheater, where the stream is heated to about 450°F. The hot gas is then fed to the acid gas injector, located on the front chamber of the thermal reactor.

Combustion air is supplied by the air blower to the acid gas injector to oxidize some of the H_2S to SO_2 and H_2O. The quantity of air is controlled to achieve a ratio of H_2S to SO_2 of 2:1. During this reaction, the thermal reactor first and second chamber temperatures are about 2400°F and 2200°F, respectively. The combustion air is heated to about 450°F in the air preheater to help maintain the 2200°F overall thermal reactor temperature.

The hot combustion gas from the thermal reactor second chamber enters a two-pass waste heat boiler. The boiler is designed to cool the hot gas to about 600°F and to generate 150 psig steam. The cooled gas from the boiler enters the thermal sulfur condenser. Most of the sulfur produced in the thermal reactor is condensed as the gas is cooled in the thermal condenser. The thermal condenser is a steam generator and the heat removed from the hot gases generates 50 psig steam. Liquid sulfur is separated from the gas in a separation chamber at the outlet end of the condenser. The condensed sulfur drains to a sulfur seal pot in a sulfur day tank through a steam jacketed drain leg. The seal pot maintains a liquid sulfur seal to prevent the process gas from escaping through the sulfur drain legs.

The cooled gas from the thermal condenser flows to the first reheater. The gas is heated to about 450°F by 600 psig steam.

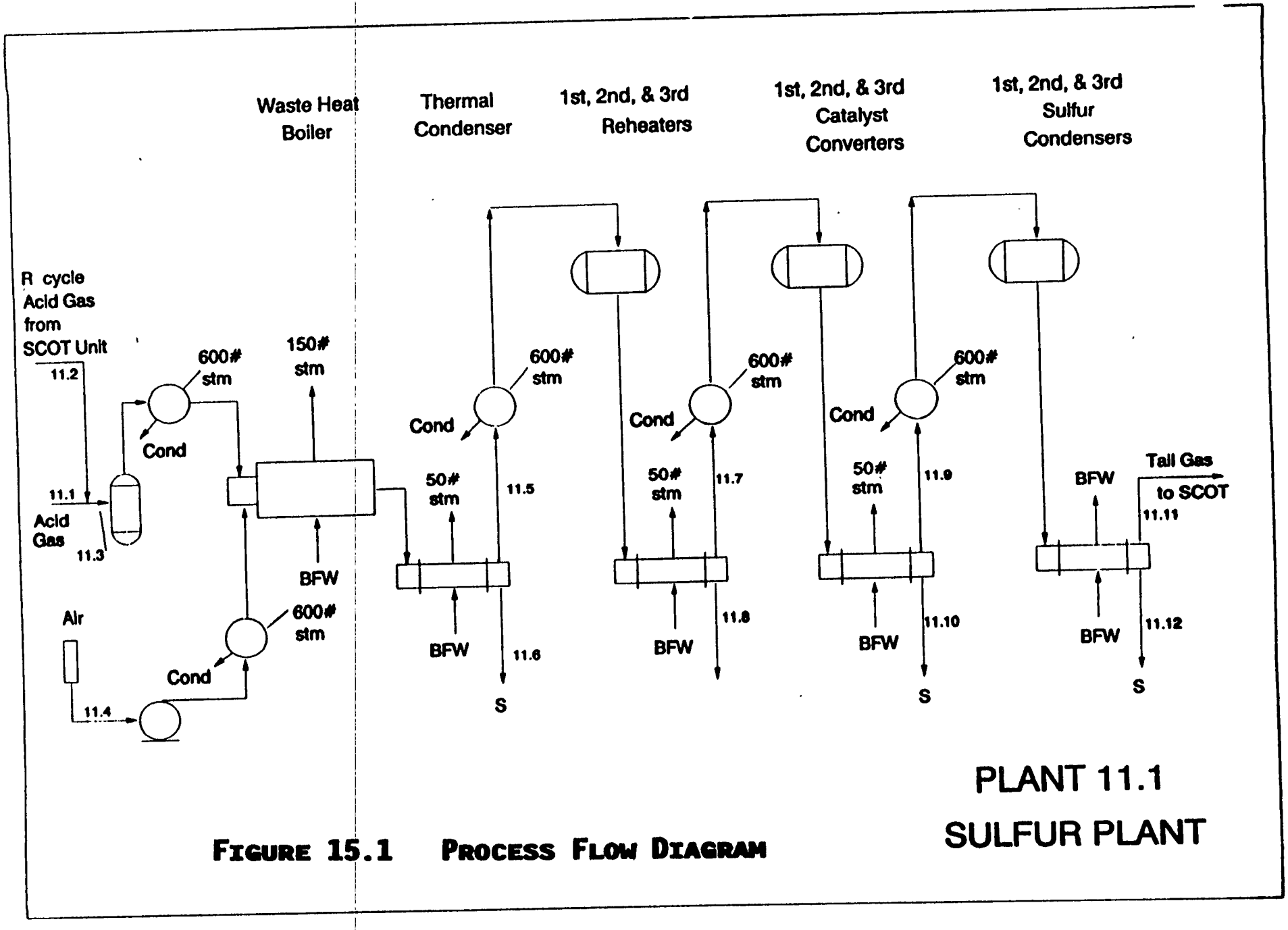

FIGURE 15.1 PROCESS FLOW DIAGRAM

The hot gas from the first reheater flows downward through the first catalyst converter where the reaction of SO_2 with H_2S occurs over a fixed bed of alumina catalyst. Since the reaction is exothermic, the temperature will rise across the bed. The temperature rise will be the greatest in this reactor because of the higher concentration of reactants present.

The reactor product gas, containing newly formed elemental sulfur, leaves the reactor and enters the first sulfur condenser. The bulk of the sulfur formed in the first catalyst converter is condensed and is drained to the sulfur day tank through a steam jacketed drain leg. Steam at 50 psig is generated on the shell side of the condenser.

The cooled gas from the first condenser flows to the second reheater where it is heated to about 420°F by 600 psig steam. Since the concentration of the reactants ar lower in the feed to the second catalyst converter than in the feed to the first, less reaction takes place and the temperature rise across the second converter is lower.

Hot effluent gas from the second converter bed enters the second sulfur condenser. The bulk of the sulfur formed in the second converter is condensed and drained to the sulfur day tank through the third steam jacketed drain leg. Steam at 50 psig is generated on the shell side of the condenser. The cooled gas from the second sulfur condenser flows to the third reheater. This reheater has the same function as the other reheaters, and uses 600 psig saturated steam as a heating medium to heat the third catalyst converter feed to about 400°F.

The third catalyst converter is similar to the first and second catalyst converters. Since the concentration of H_2S and SO_2 is very low in the feed to the third reactor bed, a relatively small amount of sulfur is formed in this stage. The reaction that takes place in this stage results in a very small temperature rise across the catalyst bed. The sulfur formed in the catalyst converter is condensed in the third sulfur condenser and is drained to the sulfur day tank through a steam-jacketed drain leg. The cooled gas (tail gas) from the third sulfur condenser flows to the SCOT tail gas treating unit.

SCOT Unit

The Process Flow Diagram for this section is shown in Figure 15.2. The fundamental r action in the Hydrogenation Section of the SCOT Unit are hydrogenation of the SO_2 and elemental sulfur. Most of the COS and CS_2 present in the reactor are hydrolyzed by the water vapor in the tail gas.

The sulfur plant tail gas is heated to over 500°F in the SCOT feed heater. The temperature of this stream is controlled to the desired SCOT reactor inlet temperature by means of a temperature controller, which regulates the amount of natural gas or syngas that is fed to the SCOT burner as fuel.

Syngas is added to the feed heater outlet to provide the necessary hydrogen for the hydrogenation of the SO_2 and elemental sulfur to H_2S.

The heated gases then pass downward through the reactor catalyst bed where the SO_2, elemental sulfur and other sulfur containing compounds (such as COS) are converted to H_2S, CO_2, CH_4, and water vapor. To assure the complete reduction of the sulfur compounds to H_2S, an excess above the stoichiometric requirement of hydrogen is fed to the reactor. The reactions are exothermic and cause a temperature rise across the reactor.

The hot gases leaving the SCOT reactor are cooled to about 320°F in the SCOT waste heat exchanger. The waste heat exchanger is a steam generator and the heat removed from the hot gases generates 50 psig steam.

The cooled gases leaving the waste heat exchanger are further cooled to about 100°F by contact with water in the quench tower. The gases enter the quench tower b low the tower packing and flow upward, countercurrent to the cool quench water. The quench water is fed to the tower above the packing at a temperature of about 100°F. The temperature of the quench water is raised to about 150°F as it cools the gases in the column. The quench water from the bottom of the column is then pumped by the quench water pumps, through the quench water cooler, where it is cooled before being returned to the top of the tower. The quench water bleed stream is the excess water contained in the quench tower feed gas that is condensed in the quench tower.

The quench tower overhead gas stream enters the SCOT absorber below the bottom tray and flows upward through the absorber countercurrent to the MDEA solution flowing down through the absorber.

Lean MDEA solution at about 100°F is fed to the top of the absorber. The solvent flows downward through the absorber, contacting the gas stream flowing upward and absorbing nearly all of the H_2S and part of the CO_2 from the gas stream. The treated vent gas then leaves the top of the absorber at about 100°F and is directed to the incinerator.

A vent gas analyzer is provided to advise the operator of the SCOT Unit clean up efficiency, H_2S and CO_2, and the amount of excess hydrogen in the vent gas.

Rich solvent is withdrawn from the absorber bottom and is pumped to the SCOT stripper through the lean/rich exchanger. The rich solvent enters the column above tray 5 (from the top). The stripper is heated by a reboiler using 50 psig steam.

The stripper overhead vapor is cooled to about 120°F in the reflux condenser (an air cooler), and collected in the reflux drum. The gas from the top of the reflux drum contains H_2S, CO_2, and H_2O and is routed to the sulfur plant as acid gas feed.

The lean solvent leaves the stripper bottom and flows through the lean/rich exchanger. Lean solvent from the exchanger is pumped to the SCOT absorber by the lean solvent pumps. The lean solvent stream from the pump discharge is cooled to about 100°F in the lean solvent cooler and is fed to the top of the absorber.

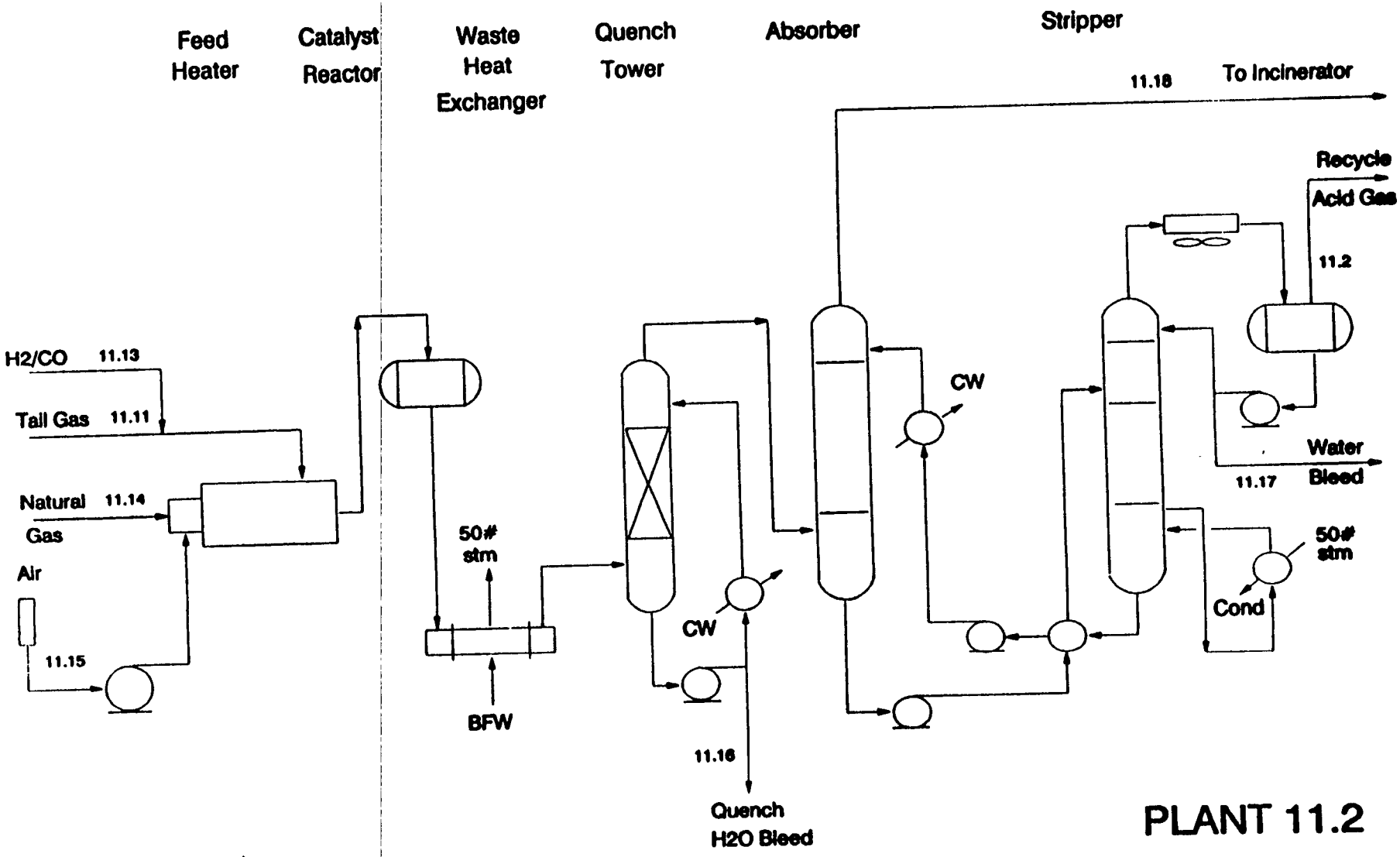

Figure 15.2 Process Flow Diagram

Incinerator

The Process Flow Diagram for this section of the plant is shown in Figure 15.3. The incinerator uses a natural draft burner to provide the heat and air necessary for the combustion of the effluent gases. The design combustion temperature is maintained by burning natural gas or syngas as fuel. The SCOT vent gas is routed below the incinerator burner to achieve maximum turbulence and contact with the oxygen (air) at high temperature.

During normal operations, the sulfur plant tail gas flows to the SCOT unit and only the SCOT vent gas is combusted in the incinerator. The design conditions for proper combustion of the SCOT vent gas is 25% excess air at a temperature of about 1200°F. The combustion products are discharged to the atmosphere through a 280 foot stack. A stack gas analyzer is provided to monitor the SO_2 in the stack.

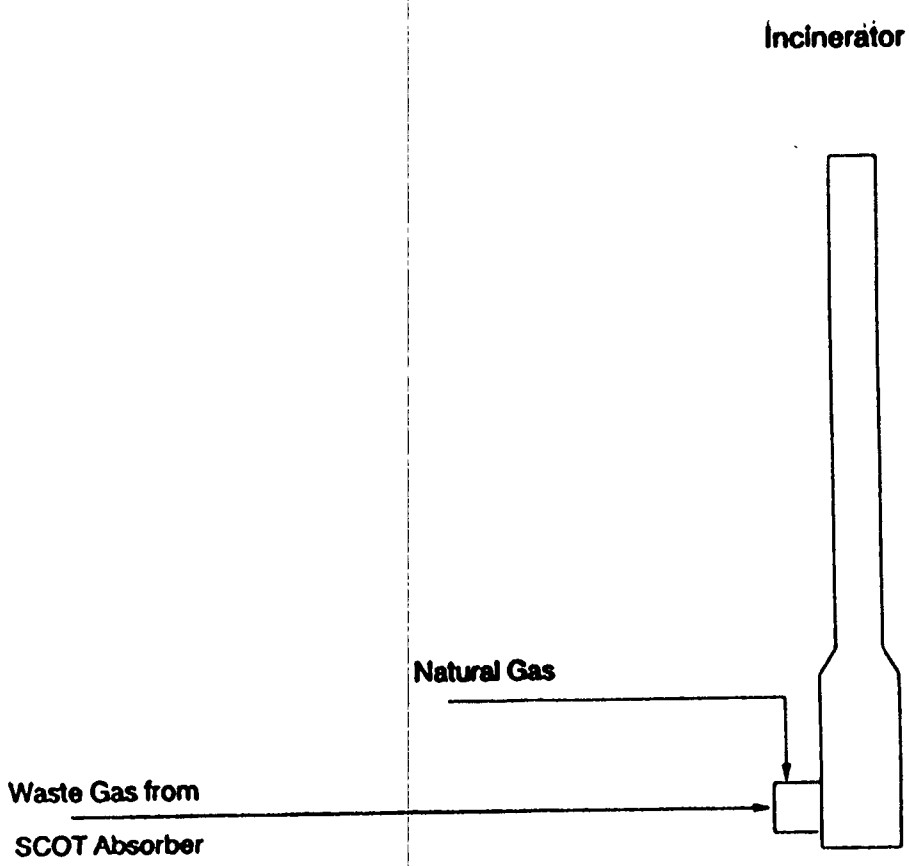

FIGURE 15.3 PROCESS FLOW DIAGRAM

INCINERATOR
PLANT 11.3

15.2 Material Balanc

Material balance for the complete plant (one train) is given in Table 15.1.

Table 15.1 - Plant 11 Mat rial Balance

PLANT 11 : INPUT

Components (Lb/Hr)	PL-6 Acid Gas	PL-9 Acid Gas	PL-38 Acid Gas	Air	Reaction Delta	Total Input
H2O	782	227	5,106	871	8,851	6,986
H2S	1,794	7,951	1,539		(11,206)	11,284
COS		29				29
NH3		3	9			12
CO	26,600	1,987			(25,728)	28,587
CO2	34,292	91,887	33,817		43,031	159,996
H2	22	181	6		(209)	209
N2		1,238		80,129		81,367
O2				24,342	(24,405)	24,342
C1	24	3	21		(48)	48
C5-350	203		273		(476)	476
350+	31				(31)	31
Phenols			325		(325)	325
Sulfur					10,555	
Total, PPH	63,748	103,506	41,096	105,342	8	313,692
Gas- MMSCFD	17	23	10	33	———	———
Gas-MW	34.6	40.7	37.2	28.7	———	———

PLANT 11 : OUTPUT

Components (Lb/Hr)	Sulfur Product	Gas to Incinerator	Sour Water to PL-38			Total Output
H2O		616	15,150			15,766
H2S		78				78
COS		29				29
NH3		12				12
CO		2,859				2,859
CO2		203,026				203,026
H2						0
N2		81,367				81,367
O2						0
C1						0
C5-350						0
350+						0
Phenols						0
Sulfur	10,555					10,555
Total, PPH	10,555	287,987	15,150			313,692
Gas-MMSCFD	———	70	———			———
Liquid-GPM	———	———	31			———
Solids-TPD	127	———	———			———
Gas-MW	———	37.6	———			———

15.3 Major Equipm nt Summary

The major equipment list for this plant is included in Table 15.2.

Tabl 15.2

MAJOR EQUIPMENT SUMMARY
LOW RANK COAL

Plant 11 - Sulfur and SCOT Plant

Type of Equipment: Reacters and Vessels

Equipment No.	Equipment Description	Length (T-T in ft.)	Diameter (ID in ft.)	Material	Design Conditions Pres (psig)	Design Conditions Temp (°F)	Remarks	No. of Vessels
11.1-C101	Acid Gas KO Drum	25.0	15.0	CS	75	350		1
11.1-C102	Combustion Chamber	40.0	15.0	CS	50	650	12″ Ref.,3″ Insul	2
11.1-C103	First Catalyst Converter	60.0	25.0	CS	50	650	3″ Ref., 3″ Insul., 3'Bed	1
11.1-C104	Second Catalyst Converter	60.0	25.0	CS	50	650	3″ Ref., 3″ Insul., 3'Bed	1
11.1-C105	Third Catalyst Converter	60.0	25.0	CS	50	650	3″ Ref., 3″ Insul., 3'Bed	1
11.2-C106	SCOT Feed Heater	20.0	15.0	CS	50	650	12″ Ref., 3″ Insul.	1
11.2-C107	SCOT Catalyst Reactor	70.0	25.0	CS	50	650	3″ Ref., 3″ Insul., 3'Bed	1
11.2-C111	Reflux Accumulator	16.0	6.0	CS	75	350		1

Type of Equipment: Towers

Equipment No.	Equipment Description	Height (T-T in ft.)	Diameter (ID in ft.)	Material	Design Conditions Pres (psig)	Design Conditions Temp (°F)	No. of Trays	Packing Ft	No. of Vessels
11.2-C108	Quench Tower	62	16	CS	75 & FV	650		10 2″ Pall Rings	1
11.2-C109	SCOT Absorber	106	15	CS	75 & FV	350	14 SS		1
11.2-C110	SCOT Stripper	90	6	CS	75 & FV	350	28 SS		1

Tabl 15.2

MAJOR EQUIPMENT SUMMARY - continued
LOW RANK COAL

Plant 11 - Sulfur and SCOT Plant

Type of Equipment: Heat Exchangers

Equipment No.	Equipment Description	Duty (MM Btu/hr	Type of Exchanger	Tube Material	Tube Design psig/°F	Shell Material	Shell Design Conditions psig/°F	Area Ft²	No. of Exch.
11.1-E101	Acid Gas Preheater	16.8	BEM	CS	75/650	CS	650/540	23070	1
11.1-E102	Air Preheater	4.3	BEM	CS	75/650	CS	650/540	5910	1
11.1-E103	First Reheater	7	BEM	CS	75/650	CS	650/540	9620	1
11.1-E104	Second Reheater	4.1	BEM	CS	75/650	CS	650/540	5630	1
11.1-E105	Third Reheater	4.2	BEM	CS	75/650	CS	650/540	6370	1
11.1-E106	Waste Heat Boiler	20.3	Spel	CS	15/650	CS	200/420	3240	1
11.1-E107	Thermal Condenser	4.2	CEN	CS	50/650	CS	100/350	2560	1
11.1-E108	First Sulfur Condenser	4.4	CEN	CS	50/650	CS	100/350	3110	1
11.1-E109	Second Sulfur Condenser	2.1	CEN	CS	50/650	CS	100/350	3310	1
11.1-E110	Third Sulfur Condenser	1.3	CEN	CS	50/650	CS	100/350	1790	1
11.2-E111	Waste Heat Exchanger	13.1	CEN	CS	50/650	CS	100/350	12260	1
11.2-E112	Quench Water Cooler	43.4	AET	SS	100/350	CS	100/165	15380	1
11.2-E113	Lean Solvent Cooler	44.9	AET	CS	100/165	CS	100/350	16720	1
11.2-E114	Lean/Rich Solvent Exchanger	90.5	AET	CS	130/300	CS	130/300	20900	1
11.2-E115	Overhead Condenser	19.4	Air Cooler	CS	100/300	75 HP Motor		83530	1
11.2-E116	Reboiler	35.5	CKU	SS	100/350	CS	75/350	4810	1

Tabl 15.2

MAJOR EQUIPMENT SUMMARY - continued
LOW RANK COAL

Plant 11 - Sulfur and SCOT Plant

Type of Equipment: Pumps

Equipment No.	Equipment Description	Flow Rate (gpm)	Delta Pres (psi)	Brake Horsepower	Design Conditions psig/°F	Design Conditions Temp (°F)	Driver	Est. Driver HP	No. of Pumps
11.2-G101A/B	Quench Water Pump	2900	50	242	100	200	Elec	250	2
11.2-G102A/B	Rich Solvent Pump	2100	75	262	130	300	Elec	275	2
11.2-G103A/B	Lean Solvent Pump	2600	50	216	130	300	Elec	225	2
11.2-G104A/B	Reflux Pump	50	40	4	75	200	Elec	5	2
11.4-G105A/B	Solvent Charge Pump	100	30	5	75	200	Elec	5	2
11.4-G106A/B	Solvent Sump Pump	100	30	5	75	200	Elec	5	1
11.4-G107A/B	Sulfur Transfer Pump (Sump Type, Steam Jacketed)	110	65	7	100	350	Elec	10	2 2
11.4-G108A/B	Sulfur Loading Pump (Steam Jacketed)	110	50	9	100	350	Elec	15	2

Type of Equipment: Air Blowers

Equipment No.	Equipment Description	Flow Rate (ACFM)	Diff Pres (psi)	Brake Horsepower	Design Conditions psig/°F	Design Conditions Temp (°F)	Driver	Est. Driver HP	No. of Equip.
11.1-K101	Sulfur Plant Air Blower	13130	13	820	50	250	Elec	900	1
11.2-K102	SCOT Air Blower	2960	5	78	50	250	Elec	100	1

Tabl 15.2

MAJOR EQUIPMENT SUMMARY - continued
LOW RANK COAL

Plant 11 - Sulfur and SCOT Plant

Type of Equipment: Miscellaneous

Equipment No.	Equipment Description	Flow Rate	Other Design Criteria	Design Conditions Pres (psig)	Design Conditions Temp (°F)	No. of Equip.
11.1-F101	Acid Gas Burner		117 MMbtu/hr			1
11.2-F102	Tail Gas Burner		14 MMbtu/hr			1
11.3-F103	Incinerator Burner		39 MMbtu/hr			1
11.3-Y101	Incinerator		16 ft ID x 20 ft Base, & 13 ft ID x 280 ft stack			1
			6" & 3" Refractory			1
11.2-Y102	Quench Filter	450 gpm	Cartridge Type	150 & FV	300	1
			SS Internals			1
11.2-Y103	Lean Solvent Filter	400 gpm	Cartridge Type	150 & FV	300	1
			SS Internals			1
11.2-Y104	Solvent Sump Filter	150gpm	Cartridge Type	150 & FV	300	1
			SS Internals			1
11.4-D101	Solvent Storage Tank	88,000 gals	Cone Roof Tank	6" H2O Int	350	1
			CS	1" H2O Ext		1
11.4-D102	Sulfur Day Tank	37,000gals	Below Ground	75 & FV	650	1
			in a Concrete Pit			1
11.4-D103	Sulfur Storage Tank	95,000 gals	CS	5 psig Int	350	1
				4" H2O Ext		
11.4-D104	Solvent Sump		5' ID x 12'	75 & FV	350	1

15.4 Utility Summary

The individual plant utility summaries for the Sulfur Plant and SCOT unit are tabulated below in Table 15.3.

Table 15.3 Utility Summary

	CW	Steam Rate, lbs/hr			Fuel Gas	Electr
Units	gpm	50#	150#	600#	MMSCFD	Kw
Sulfur	0	-10,700	-19,900	35,340	0	851
SCOT	6,307	22,400	0	0	1.6	696
Total	6,307	11,700	-19,900	35,340	1.6	1,547

Note: Negative values represent utility production

15.5 Water Summary

The Sulfur Plant uses one gpm of raw water and produces 31 gpm of sour water which is sent to Ammonia Recovery, Plant 38.

16. PLANT 31

16. Plant 31 (St am and P wer G neration)

16.1 Design Basis Criteria and Considerations

The cogeneration plant supplies electric power and 600 psig, 720°F superheated steam to all plants. The cogeneration plant provides self sufficient, sole source of power to the complex. Since the power plant is not connected to any grid, Plant 31 has extra installed generating capacity to ensure 100 percent reliability.

A diesel fired generator, 2500 MVA, is used when making a black start. This generator supplies enough emergency electricity to start up a combustion turbine generator and allow the plant to "boot strap" itself up to capacity.

The important design criteria are summarized as follows:

- Primary steam header is 600 psig, 720°F superheated steam
- Five, 80,000 kW (ISO rated) combustion turbine generators
- Five, three pressure level heat recovery steam generators rated at 172,460 pounds per hour high pressure superheated steam (1355 psia, 906°F), and 189,230 pounds per hour intermediate pressure superheated steam (144 psia, 450°F)
- Two extraction, admission, and condensing steam turbine generators rated at 130,000 kW at 1,315 psia, 900°F throttle conditions and 3.5 inch HgA back pressure
- An AC synchronous totally enclosed, water-to-air cooled (TEWAC) generator, rated at 150 MVA and 0.85 power factor for each steam turbine
- An AC synchronous TEWAC generator, rated at 95 MVA and 0.85 power factor for each combustion turbine
- Natural gas is blended with medium BTU gas for the combustion turbines
- Steam output from the plant is 350,000 pounds per hour superheated steam at 600 psig, 720° F.
- Electrical output from the plant is 400,000 kW net

Backup fuel is No. 2 fuel oil (heavy distillate from the complex)

- Generators produce electric power at 13.8 Kv, 3 phase, 60 Hz
- Distribution of electric power from the generators to the main switch-gear centers is 69Kv, 3 phase, 60 Hz

16.2 Process Description and Process Flow Diagram

P wer Generation

Plant No. 31 is a cogeneration power plant. The plant provides both thermal and electrical energies to the process plants. Included in this cogeneration plant are five trains of combustion turbine generators (CTG), heat recovery steam generators (HRSG), and two steam turbine-generator sets (STG) among other major components.

Each train consists of a G.E. PG7111EA combustion turbine, an HRSG, an HRSG feed water pump, and all necessary associated auxiliary equipment. Other major components are two steam turbine generators and two steam surface condensers. The plant Process Flow Diagram (PFD) is shown on Figure 16.1 (drawing 31-D-B-1). The stream conditions and energy balance of the PFD are also shown on this PFD. A dump condenser is provided to receive steam when steam turbines are off the line. Two full size spare feed water pumps are also provided for the five CTG/HRSG trains.

Each combustion turbine is rated at 80,000 kW at ISO conditions when fueled with natural gas. The turbine is equipped with dry NOx combustors to achieve 25 parts per million volumetric dry at 15% O_2 (ppmvd) NOx emission level. No steam injection is required. Turbine peak rating is 75,834 kW at 95°F ambient. The corresponding exhaust temperature is 1075°F.

A three-pressure level HRSG is utilized. The lowest pressure level is an integral deaerating/low pressure (LP) module. The five HRSG, are each capable of producing 172,460 pounds per hour high pressure (HP) superheated steam (1355 psia, 906°F) and 189,230 pounds per hour intermediate pressure (IP) superheated steam (144 psia, 450°F) when the hot gas flow is 1,978,971 pounds per hour and 936°F.

About 400,000 pounds per hour 150 psig saturated steam is provided from the process plants. This steam, along with the intermediate pressure steam produced by the HRSG, is superheated in the IP superheater module before being admitted into the steam turbine.

The HRSG is also equipped with natural gas fueled duct burners. Steam productions become 537,196 pounds per hour and 161,434 pounds per hour for HP steam and IP steam respectively at the combustion turbine peak, at 95°F ambient. When firing duct burners, the CTG exhaust temperature increases from 1075°F to 1465°F.

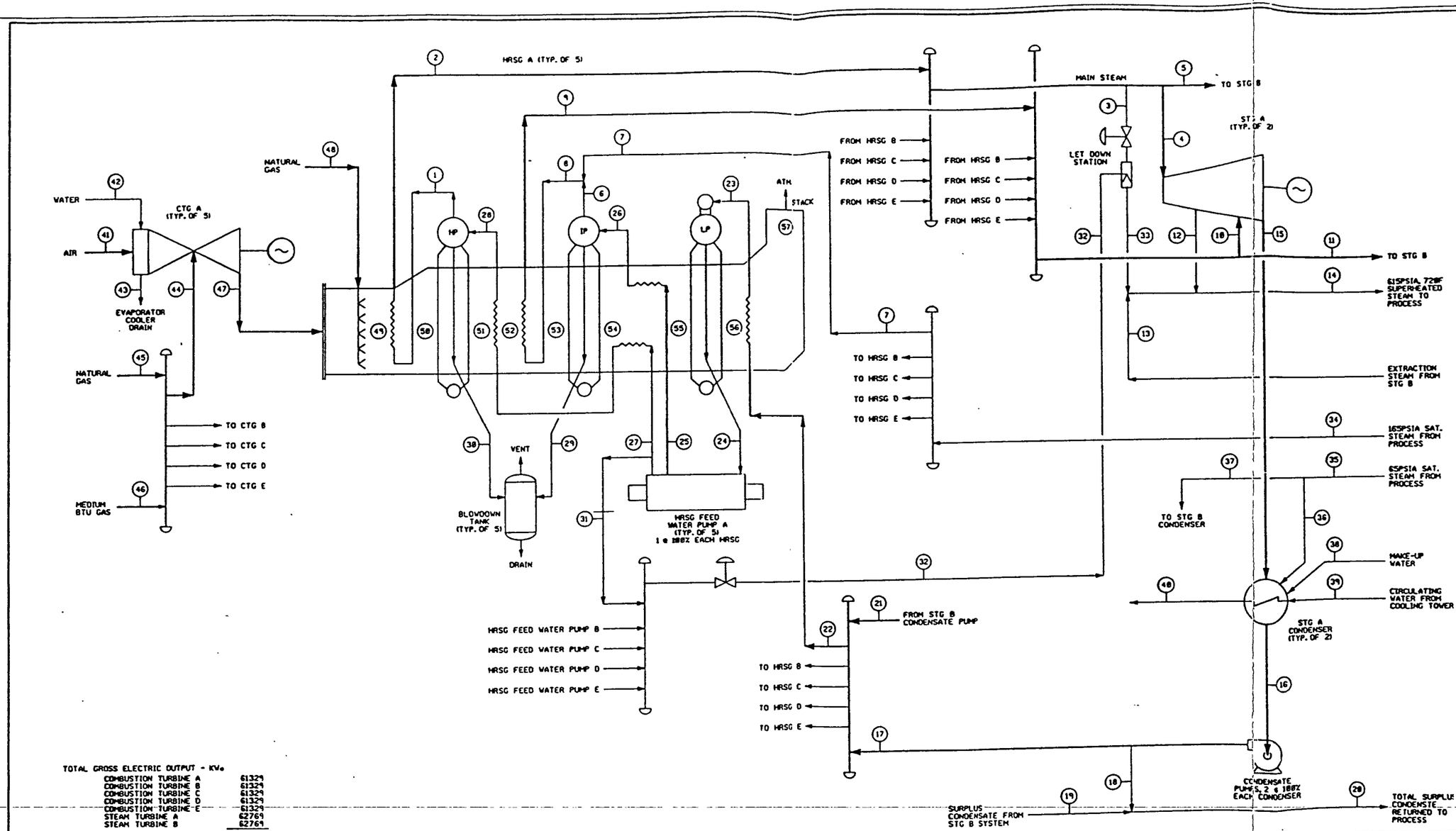

NO.	FLOW LB/HR	TEMP. DEG. F	PRESSURE PSIA	ENTHALPY BTU/LB
1	101083	587.3	1395.1	1174.2
2	101083	906.0	1354.5	1438.9
3	0			
4	452707	900.0	1315.0	1436.9
5	452707	900.0	1315.0	1436.9
6	98691	357.6	148.5	1194.8
7	100000	357.6	148.5	1194.8
8	198691	357.6	148.5	1194.8
9	198691	450.0	144.2	1249.2
10	496728	443.7	140.0	1246.2
11	496728	443.7	140.0	1246.2
12	200000	725.0	650.0	1363.4
13	200000	725.0	650.0	1363.4
14	560000	720.0	615.0	1362.5
15	669435	120.5	1.72	994.1
16	944435	120.5		88.4
17	713423	120.5		88.4
18	231012	120.5		88.4
19	231012	120.5		88.4
20	462024	120.5		88.4
21	713423	120.5		88.4
22	285369	120.5	30.7	88.4
23	285369	220.0	29.9	188.1
24	285369	250.0	29.9	218.5
25	100665	250.1	153.0	219.0
26	100665	347.6	148.5	319.6
27	184704	251.2	1400.0	224.0
28	184704	577.3	1395.1	587.5
29	1974	357.6	148.5	330.0
30	3621	587.3	1395.1	599.0
31	0			
32	0			
33	0			
34	500000	366.0	165.0	1195.6
35	550000	298.0	65.0	1179.1
36	275000	298.0	65.0	1179.1
37	275000	298.0	65.0	1179.1
38	0			
39	32366000	87.0		
40	32366000	115.0		
41	2016430	95.0		
42	2470	70.0		
43	500	70.0		
44	56800	70.0	315.0	
45	132725	70.0	315.0	
46	151275	70.0		
47	2077200	914.0		
48	720	70.0		
49	2077920	936.0		
50	2077920	853.5		
51	2077920	667.3		
52	2077920	584.0		
53	2077920	564.6		
54	2077920	487.6		
55	2077920	351.3		
56	2077920	335.3		
57	2077920	281.0		

NOTE:
ONE COMBUSTION TURBINE/HRSG SHOWN, TYPICAL OF 5; AND ONE STEAM TURBINE/CONDENSER SHOWN, TYPICAL OF 2.

TOTAL GROSS ELECTRIC OUTPUT - KWe

COMBUSTION TURBINE A	61329
COMBUSTION TURBINE B	61329
COMBUSTION TURBINE C	61329
COMBUSTION TURBINE D	61329
COMBUSTION TURBINE E	61329
STEAM TURBINE A	62769
STEAM TURBINE B	62769
TOTAL GROSS OUTPUT	432183
LESS EST. AUX. POWER	12183
NET PLANT OUTPUT	420000

NATURAL GAS ENERGY INPUT - MMBTU/HR (HHV)

COMBUSTION TURBINE A	633.94
COMBUSTION TURBINE B	633.94
COMBUSTION TURBINE C	633.94
COMBUSTION TURBINE D	633.94
COMBUSTION TURBINE E	633.94
HRSG A DUCT BURNER	17.20
HRSG B DUCT BURNER	17.20
HRSG C DUCT BURNER	17.20
HRSG D DUCT BURNER	17.20
HRSG E DUCT BURNER	17.20

MEDIUM BTU GAS ENERGY INPUT - MMBTU/HR (HHV)

COMBUSTION TURBINE A	121.02
COMBUSTION TURBINE B	121.02
COMBUSTION TURBINE C	121.02
COMBUSTION TURBINE D	121.02
COMBUSTION TURBINE E	121.02
TOTAL ENERGY INPUT	3868.88

NET PLANT HEAT RATE = 9192 BTU/KWHR (HHV)

Figure 16.1

NO.	DATE	REVISIONS	BY	CHKD	DESIGN SUPV	ENGR	PROJ ENGR	APPR
B	5/29/91	REVISED FOR STEAM FLOW						
A	5/3/91	ISSUED FOR REVIEW						

SCALE: NONE | DRAWN BY: MHT | DESIGNED | CHIEF ENGR

DOE/PETC COAL LIQUEFACTION (BASE CASE)

BECHTEL POWER CORPORATION
HOUSTON, TEXAS

STEAM AND POWER GENERATION
HEAT BALANCE, 95°F AMBIENT
FLOW DIAGRAM

JOB NO.	DRAWING NO.	REV.
28952	31-D-B-1	B
DOE/PETC	NOT FOR CONSTRUCTION	

CADD FILE NO.: 31D81.DGN MHT 05/29/91

DOE80.DGN

22 x 34 "D" SIZE

Two extraction, admission, and condensing steam turbines are provided. Each steam turbine is rated at 130,000 kW at 1315 psia, 900° F throttle conditions and 3.5 inch HgA back pressure. At a controlled extraction stage, 260,000 pounds per hour steam at 650 psia and 725° F is extracted from each turbine and exported to the process plants where it is desuperheated for process use.

Intermediate pressure steam at 140 psia and 444° F is admitted to the steam turbine low pressure section for more power generation. Steam, after expansion, is condensed in a water cooled surface condenser for re-use in the cycle.

Condensate from the condenser hotwell is then pumped to the low pressure economizer (LP) section of the HRSG where it is heated to 220° F. From there, the feed water enters the deaerating/LP section of the HRSG, thus completing the steam/water cycle. The flow of 400,000 pounds per hour of 50 psig saturated steam from the process plants is dumped into the condensers if it is of condensate quality. Surplus condensate of 369,620 pounds per hour is returned to the process plants.

A heat rejection system consists of water cooled condensers, circulating water pumps, and the cooling tower. Each condenser has a heat duty of 860 MMBtu/hr during normal operation. Circulating water flow to the condenser is 62,000 gpm. The cooling tower is designed for 87° F inlet water and 28° F range. While physically located in Plant 32, the tower has ten cells dedicated to the Steam and Power Generation plant.

An AC synchronous generator rated at 150 MVA and 0.85 power factor for each steam turbine is provided. The generator is a totally enclosed, water-to-air cooled (TEWAC) design. Five additional TEWAC generators, each rated at 95 MVA and 0.85 power factor, are coupled to the combustion turbines. Cooling water supply is 90° F for all above stated generator ratings.

Pipeline quality natural gas is the primary fuel for plant No. 31. The natural gas is blended with medium BTU gas for the combustion turbines. The medium BTU gas is assumed to have a low heating value of 256 Btu/scf. Natural gas pressure is assumed sufficiently high enough (approximately 300-400 psig) to be fed into the combustion turbines. This eliminates the need of gas compressors. HRSG duct burners, on the other hand, can operate under lower gas pressure.

The plant also utilizes No. 2 fuel oil (heavy distillate from the gas oil hydrotreater) as a back-up fuel. The fuel oil handling system consists of unloading pumps, day tanks, forwarding pumps and purifying equipment.

St am Distribution

The four distribution systems discussed in the following paragraphs are:

- 600 psig, 720° F steam system
- 600 psig saturated steam system
- 150 psig saturated steam system
- 50 psig saturated steam system

Safety valves are installed to prevent over-pressuring of the steam headers. The steam piping systems are drained to the atmospheric blowoff tanks during startup and normal operation.

The overall steam distribution and balance for this plant is shown on Figure 16.2.

600 psig, 720° F Steam System. This system supplies superheated steam to all the process plants in the complex. Each process plant is equipped with a desuperheater at its battery limits to ensure high quality steam throughout the complex.

600 psig Saturated Steam System. This system operates at saturated or slightly above saturated conditions. The overall steam balance, shown in Table 16.1, indicates the two 600 psig systems are in balance with the Plant 31 cogenerators and steam generators in Plants 2 and 9 supplying the steam reboilers for the remainder of the complex. The 150 psig steam system header is maintained with 600 psig steam via a letdown station.

150 psig Saturated Steam System. This system also operates at saturated or slightly above saturated conditions. The overall steam balance, shown in Table 16.1, shows an excess of 150 psig steam is generated normally by the steam generating equipment. This is normally returned to the cogeneration plant (Plant 31) where it's useful energy is recovered. This system is also arranged to supply 150 psig steam to control the 50 psig steam header pressure.

50 psig Saturated Steam System. This lowest pressure header operates at a nominal 50 psig with a small amount of superheat. The overall steam balance, shown in Table 16.1, shows an excess of 50 psig steam is generated normally by the steam generating equipment. During normal operation, the 50 psig header supplies steam to the process plant steam users. The excess steam is returned to the Cogeneration plant (Plant 31) and dumped into the water cooled condensers. During optimization, this energy could also be recovered if economical.

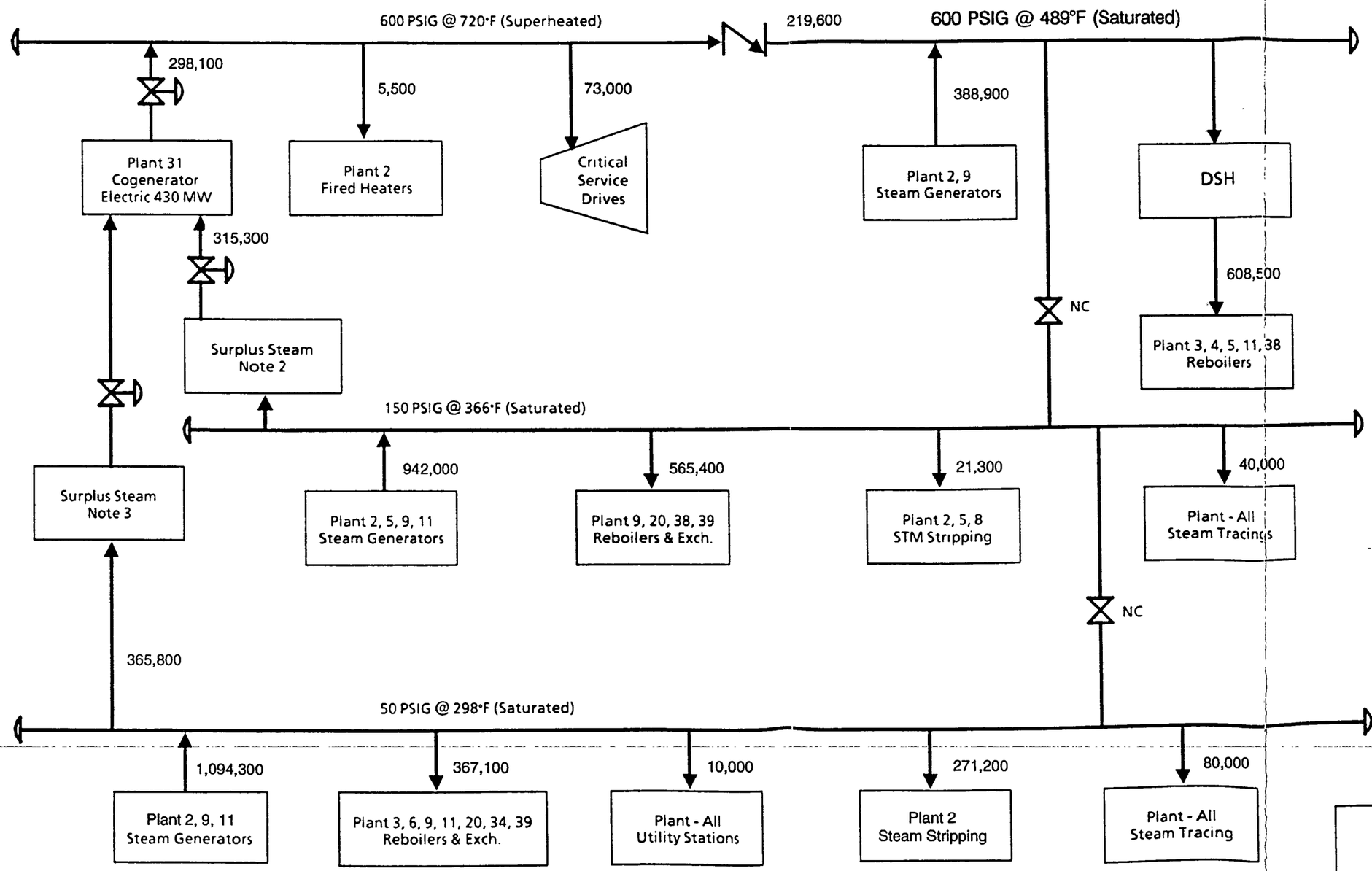

Notes:

1. Flows are for normal operation and in lbs./hr.
2. Useful energy is recovered in steam turbines.
3. Steam is dumped into water cooled condensers.

Process Flow Diagram

DOE/PETC
COAL LIQUEFACTION
LOW RANK COAL

OVERALL STEAM FLOW DISTRIBUTION

Figure 16.2

0691029-5

Excess condensate from the complex, is returned to the Cogeneration plant for polishing, to enable its use in generating superheated 1355 psia, 906°F steam.

Plant Operations

Plant No. 31 is not tied to an outside network. It can not receive power from, nor export power to the network. For this reason, Plant 31 has extra installed generating capacity. The plant is capable of providing 400,000 kW to process plants with two generators being removed from the line. This could be one generator on planned maintenance and the other on forced outage.
In light of the above reliability criterion, four operational modes are defined:

Mode 1: Normal operation, all CTG and STG are on line:
Combustion turbines are loaded to about 84% of their rated base load capacity. Steam turbines are 50% loaded. HRSG duct burners will operate as warm-up torches to increase the CTG exhaust temperature in order to produce sufficient steam for steam turbines.

Mode 2: Loss of one CTG and one STG:
Combustion turbines are loaded to about 105% of their rated base load. Steam turbine is at full load. HRSG duct burners are not fired.

Mode 3: Loss of two CTG:
Combustion turbines will have to peak at their maximum firing temperature of 2120°F. Steam turbines are 75% loaded. HRSG duct burners are heavily fired.

Mode 4: Loss of both STG:
All combustion turbines will peak. Since all steam turbines are off the line this will be a simple cycle operation. However, the HRSGs will be utilized to produce process steam. Excess steam, if any, will be dumped into the dump condenser.

Plant Performance:

Plant performance under various operating modes is summarized below:

Mode 1: 5 CTG and 2 STG on line (normal operation)
CTG 84% load, STG 50% load, HRSG modestly fired

Ambient temperature	95°F
Gross output	412,000 kW
Estimated auxiliary load	12,000 kW
Net output	400,000 kW
Natural gas required (HHV)	2,706 MMBtu/hr
Medium BTU gas required (HHV)	985 MMBtu/hr
Net heat rate (HHV)	9,228 Btu/kWhr

Mode 2: 4 CTG and 1 STG on line
CTG 105% load, STG full load, HRSG unfired

Ambient temperature	95°F
Gross output	412,000 kW
Estimated auxiliary load	12,000 kW
Net output	400,000 kW
Natural gas required (HHV)	2,506 MMBtu/hr
Medium BTU gas required (HHV)	985 MMBtu/hr
Net heat rate (HHV)	8,727 Btu/kWhr

Mode 3: 3 CTG and 2 STG on line
CTG peak load, STG 75% load, HRSG fired

Ambient temperature	95°F
Gross output	406,060 kW
Estimated auxiliary load	11,060 kW
Net output	395,000 kW
Natural gas required (HHV)	2,555 MMBtu/hr
Medium BTU gas required (HHV)	985 MMBtu/hr
Net heat rate (HHV)	8,962 Btu/kWhr

Mode 4: 5 CTG on line
CTG peak load, simple cycle

Ambient temperature	95°F
Gross output	379,345 kW
Estimated auxilliary load	10,332 Kw
Net output	369,013 kW
Natural gas required (HHV)	3,402 MMBtu/hr
Medium BTU gas required (HHV)	985 MMBtu/hr
Net heat rate (HHV)	11,889 Btu/kWhr

Steam outputs will be maintained in all above operating modes. However, net electrical output becomes 395,000 kW and 369,013 kW when operating in modes 3 and 4, assuming 2.8% auxiliary power.

16.3 Overall Steam Balanc

The steam balance for the plant is presented in Table 16.1.

Table 16.1

Overall Steam Balance – Low Rank Coal

Plant Name	Plant No.	Steam Produced MLb/H	Steam Consumed MLb/H	Cond Produced MLb/H	Cond Consumed MLb/H
600 Psig, 720F (Superheated)					
Steam and Power	31	298.1			298.1
Coal Liquefaction (1)	2		5.5	----	
All Turbine Drives	All		73.0	73.0	
Letdown to 600# Sat			219.6	----	
Sub–Total		298.1	298.1	73.0	298.1
600 Psig, 489F (Saturated)					
Letdown from 600# Sup–Stm		219.6			----
Coal Liquefaction	2	97.1			97.1
Gas Plant	3		214.7	214.7	
Naphtha Hydrotreater	4		38.0	38.0	
Hydrogen Production	9	291.8			291.8
Sulfur Recovery	11		35.3	35.3	
Ammonia Recovery	38		320.5	320.5	
Sub–Total		608.5	608.5	608.5	388.9
150 Psig, 366F (Saturated)					
Coal Liquefaction (1)	2	47.4	1.8	----	47.4
Gas Oil Hydrotreater (1)	5	118.8	5.0	----	118.8
ROSE SR (1)	8		14.5	----	
Hydrogen Production	9	812.9	57.0	57.0	812.9
Sulfur Recovery	11	19.9			19.9
Tanks Warmup	20		22.0	22.0	
Ammonia Recovery	38		512.1	512.1	
Phenol Recovery	39		31.3	31.3	
Steam Tracing	All		40.0	40.0	
Surplus Steam to Plant 31			315.3	315.3	
Sub–Total		999.0	999.0	977.7	999.0
50 Psig, 298F (Saturated)					
Coal Liquefaction (1)	2	328.8	271.2	----	328.8
Gas Plant	3		17.2	17.2	
Gas Oil Hydrotreater	5		44.7	44.7	
Hydrogen Purification	6		202.0	202.0	
Hydrogen Production	9	894.3	128.8	128.8	894.3
Sulfur Recovery	11		11.7	11.7	
Tanks Warmup	20		3.5	3.5	
Waste Water Treatment	34		3.0	3.0	
Phenol Recovery	39		85.0	85.0	
Steam Tracing	All		80.0	80.0	
Utility Stations (1)	All		10.0	----	
Surplus Steam to Plant 31			366.0	366.0	
Sub–Total		1,223.1	1,223.1	941.9	1,223.1
Total		3,128.7	3,128.7	2,601.1	2,909.1

Blowdown (5% of total BFW)	153.1	MPPH	306.2	GPM
Overall Makeup Water (BFW)	461.1	MPPH	922.2	GPM
Total Surplus Steam to PL–31	681.3	MPPH		

Note 1 ... Steam used for Stripping, Vacuum Jet Ejectors, Fired Heaters is lost to waste water.

Table 16.1 - continued

Overall Condensate Balance – Low Rank Coal

Description	Produced MLb/H	Produced GPM	Consumed MLb/H	Consumed GPM
Condensate				
600# Steam, Superheated	73.0	146.0	298.1	596.2
600# Steam, Saturated	608.5	1,217.0	388.9	777.8
150# Steam, Saturated	977.7	1,955.4	999.0	1,998.0
50# Steam, Saturated	941.9	1,883.8	1,223.1	2,446.2
BFW Blowdown (5% of Total)	----	----	153.1	306.2
Condensate Makeup Water	461.1	922.2	----	----
Grand Total	3,062.2	6,124.4	3,062.2	6,124.4

Plant	Condensate Produced MPPH	Condensate Consumed MPPH	Condensate Net Makeup MPPH
2	0.0	473.3	473.3
3	231.9	0.0	(231.9)
4	38.0	0.0	(38.0)
5	44.7	118.8	74.1
6	202.0	0.0	(202.0)
8	0.0	0.0	0.0
9	185.8	1,999.0	1,813.2
11	47.0	19.9	(27.1)
20	25.5	0.0	(25.5)
31	0.0	298.1	298.1
34	3.0	0.0	(3.0)
38	832.6	0.0	(832.6)
39	116.3	0.0	(116.3)
--	193.0	0.0	(193.0)
B/D	0.0	153.1	153.1
Surplus Stm	681.3	0	(681.3)
Total	2,601.1	3,062.2	461.1

16.4 Major Equipment Summary

The major equipment summary for the plant is given in Table 16.2.

Table 16.2 Major Equipment Summary

STEAM AND POWER GENERATION

Type of Equipment: Vessels and Tanks

Equipment No.	Equipment Description	Length (T-T in ft.)	Diameter (ID in ft.)	Material	Design Conditions Psig	oF	Remarks Capacity (hrs)	Capacity (gal)	No. of Vessels
31-D101A/B	Fuel Oil Day Tanks	40	50	C.S.	100	100	24	650,000	2
31-D102A/B	Condensate Storage Tank	30	30	C.S.	100	100	24	150,000	2
31-D103	CCW Head Tank	12	6.5	C.S.	150	100	N/A	3,000	1
31-D104	Emergency Diesel Gen. Fue	9	13	C.S.		100	48	8,800	1
31-D105	Fuel Gas Scrubber Tank	4	3	S.S.	0	100	N/A	200	2
31-D106A-E	Inlet Gas Scrubber	8	3	S.S.	500	100	125,000 SCFM		5

Table 16.2 Major Equipment Summary - continued

EQUIPMENT LIST OF PLANT 31 - STEAM AND POWER GENERATION

Type of Equipment: Heat Exchangers

Equipment No.	Equipment Description	Duty (MM Btu/hr)	Type of Exchanger	Tube Material	Tube Desig psig/oF	Shell Material	Shell Desi psig/oF	Area Ft2	No. of Exch.
31-E101A-E	Heat Recovery Steam Generators with Duct Burners and Deaerator	468		S.S.	1500HI 150IP /1500	C.S.	Atm/100	545,000	5
31-E102A/B	Steam Turbine Surface Condensers	1520		S.S.	50/200	C.S.	3.5" Hg/95	91,137	2
31-E103	Turbine Dump Condenser	2550		S.S.	50/200	C.S.	3.5" Hg/95	150,868	1
31-E104A/B	CCW Heat Exchangers	30			150/150				2

Tabl 16.2 Maj r Equipm nt Summary - continued

EQUIPMENT LIST OF PLANT 31 - STEAM AND POWER GENERATION

Type of Equipment: Pumps

Equipment No.	Equipment Description	Flow Rate GPM	Delta Press PSIa	Brake HP	Design Conditions Pres (psig)	Temp (oF)	Driver	Est. Drive HP	No. of Pumps
31-G101A-D	Hotwell Condensate Pumps	3,200	994.4	249	100	200	Elec	300	4
31-G102A-F	HRSG Feed Pumps	690	583.7 58.4	731	1500/150	300	Elec	750	5
31-G103A-D	Circulating Water Pumps	83,820	43.2	2647	50	95	Elec	3000	4
31-G104A/D	Circulating Water Booster Pumps	17,600	34.6	445	85	95	Elec	500	4
31-G105A/B	Closed Cooling Water Pumps	3,000	86.5	189	150	115	Elec	200	2
31-G106A/B	Dump Condenser Condensate pumps	4,120	99.4	321	100	400	Elec	350	2
31-G107A-F	Condenser Vacuum Pumps	25 SCFM		100	1.0" Hg	95	Elec	100	6
32-G108A/B	High Pressure Steam Generator Pumps	700	650.0	371	750	550	Elec	400	2
32-G109A/B	Medium Pressure Steam Generator Pumps	3,200	200.0	522	300	425	Elec	600	2
32-G110A/B	Low Pressure Steam Generator pumps	2,300	100.0	188	150	350	Elec	250	2

Tabl 16.2 Major Equipm nt Summary - continu d

EQUIPMENT LIST OF PLANT 31 - STEAM AND POWER GENERATION

Type of Equipment: Steam and Turbine Generators

Equipment No.	Equipment Description	Design Power MV	Design PSIG HP/IP/LP	Design F HP/IP/LP	Main Stm Flow MLb/hr	Admission STM Flow MLb/hr	Exhaust STM Flow MLb/hr	No. of STM GEN
31-K101A/B	Steam Turbine - Generators	130	1300/125 /-13	900/444 /121	1,002	700	1,252	2

Equipment No. Number	Equipment Description	Design Power MV	Design Air Temp F	Air Flow MLb/hr	Exhaust Temp F	Turbine Exhaust MLb/hr	Turbine Exhaust F	No. of COMB GEN
31-K102A-E	Combustion Turbine - Generators	80	95	2,100	705	2,150	1,075	5
31-K103	Emergency Diesel Generato	2						1

Type of Equipment: Miscellaneous

Equipment No.	Equipment Description	Flow Rate	Other Design Criteria	Design Conditions Pres (psig)	Temp (oF)	Driver	Est. Drive HP	No. of Equip.
31-T101	Turbine Building Bridge Crane		75 tons, Width 65, CS					1

16.5 Utility Summary

Table 16.3 below presents a summary of the utilities required for Plant 31.

Table 16.3

PLANT 31 UTILITY SUMMARY

Steam, lbs/hr, 600 psig, 720° F	
Production	328,100
Consumption	30,000
Net Production	298,100
Demineralized water, gpm	922
Cooling water, gpm circulated	62,000
Fuel Gas, MMSCFD	
Medium Btu gas	102
Natural Gas	93
Electricity, kW	
Gross Output	412,000
Auxiliary Load	12,000
Net Output	400,000

17. PLANT 32

17. Plant 32 (Raw, Cooling and Potable Water)

17.1 Design Basis Criteria and Considerations

Raw Water Treatment

The raw water treatment consists of:

- Clarification of water
- Gravity filtration
- Potable water chlorinator
- Demineralization

Clarified water is used for cooling tower makeup, fire fighting and utilities.

A package potable water system is used to treat water used for drinking, food preparation and sanitary facilities. This water has been clarified and filtered.

Boiler feed water has been clarified, filtered and demineralized.

Overall flow of raw, clarified and potable water is illustrated on Flow Diagram, Figure 17.1.

The process flow sketch is shown on Flow Diagram, Figure 17.2. The water clarification system is designed to treat approximately 14,000 GPM of raw water. The filtration system is designed for 1,400 GPM, demineralization for 1,100 GPM and potable water for 100 GPM. Normal flow rate through the system will vary between 8,000 to 14,000 GPM depending on the rainfall. Rain runoff from building roofs and uncontaminated areas of the plant as well as treated process wastewaters from Plant 34 will be used to supplement lake or river water.

Reactor/clarifiers are used to clarify the water. These units produce a much thicker sludge than is possible in a conventional clarifier. The thickened sludge can be pumped directly to a sludge dewatering press without the need of a thickener.

Raw water analysis is shown in Table 17.1. For raw water with these given quality (as shown in Table 17.1) conventional cold lime softening and soda ash treatments are not needed to reduce the content of calcium and magnesium as carbonate. Sodium aluminate and a polymer are added to aid settling of the suspended solids. The softened effluent does not require a pH adjustment.

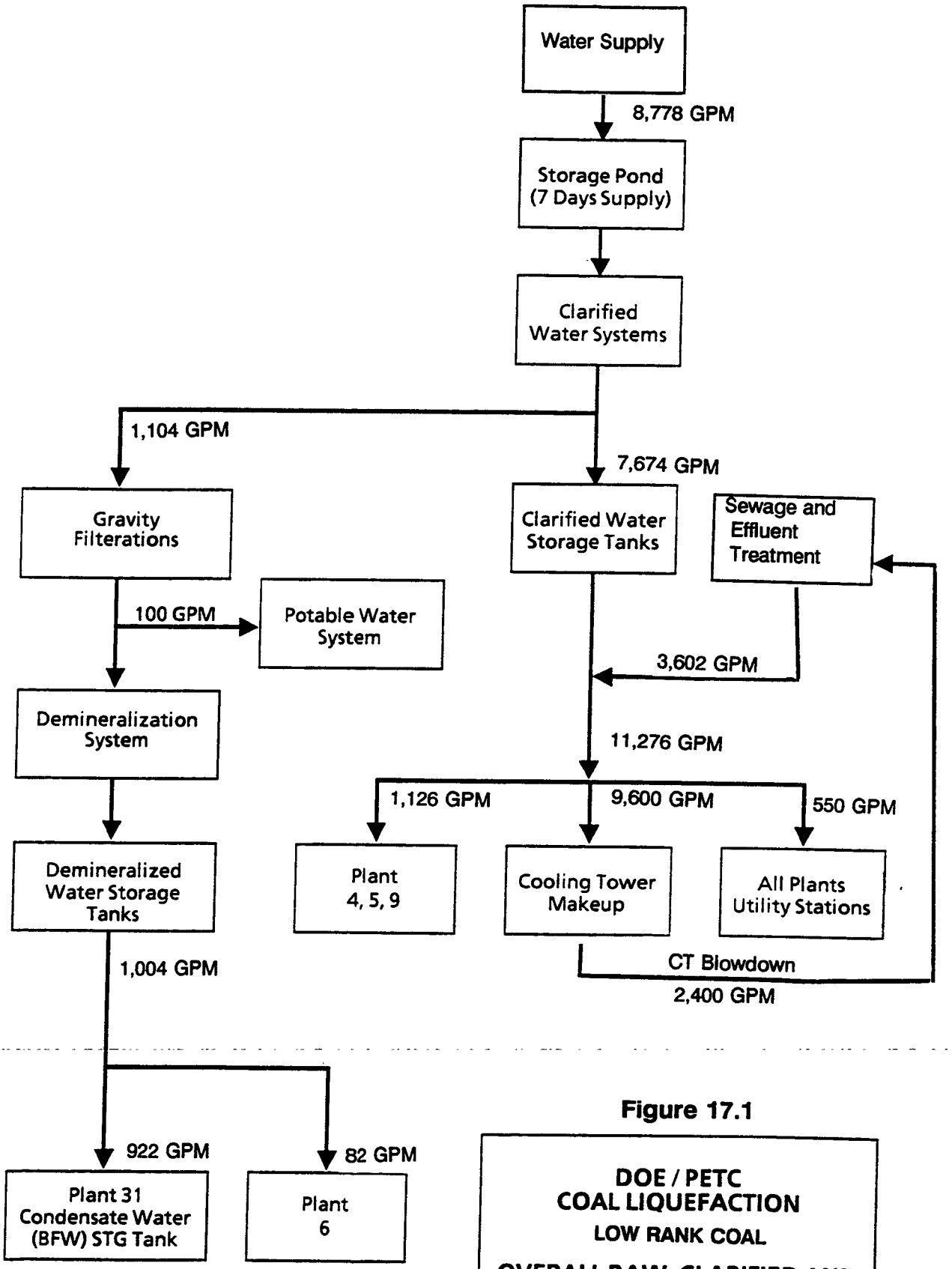

NOTE: Flows are for normal operation.

Figure 17.1

DOE / PETC
COAL LIQUEFACTION
LOW RANK COAL

OVERALL RAW, CLARIFIED AND POTABLE WATER DISTRIBUTION

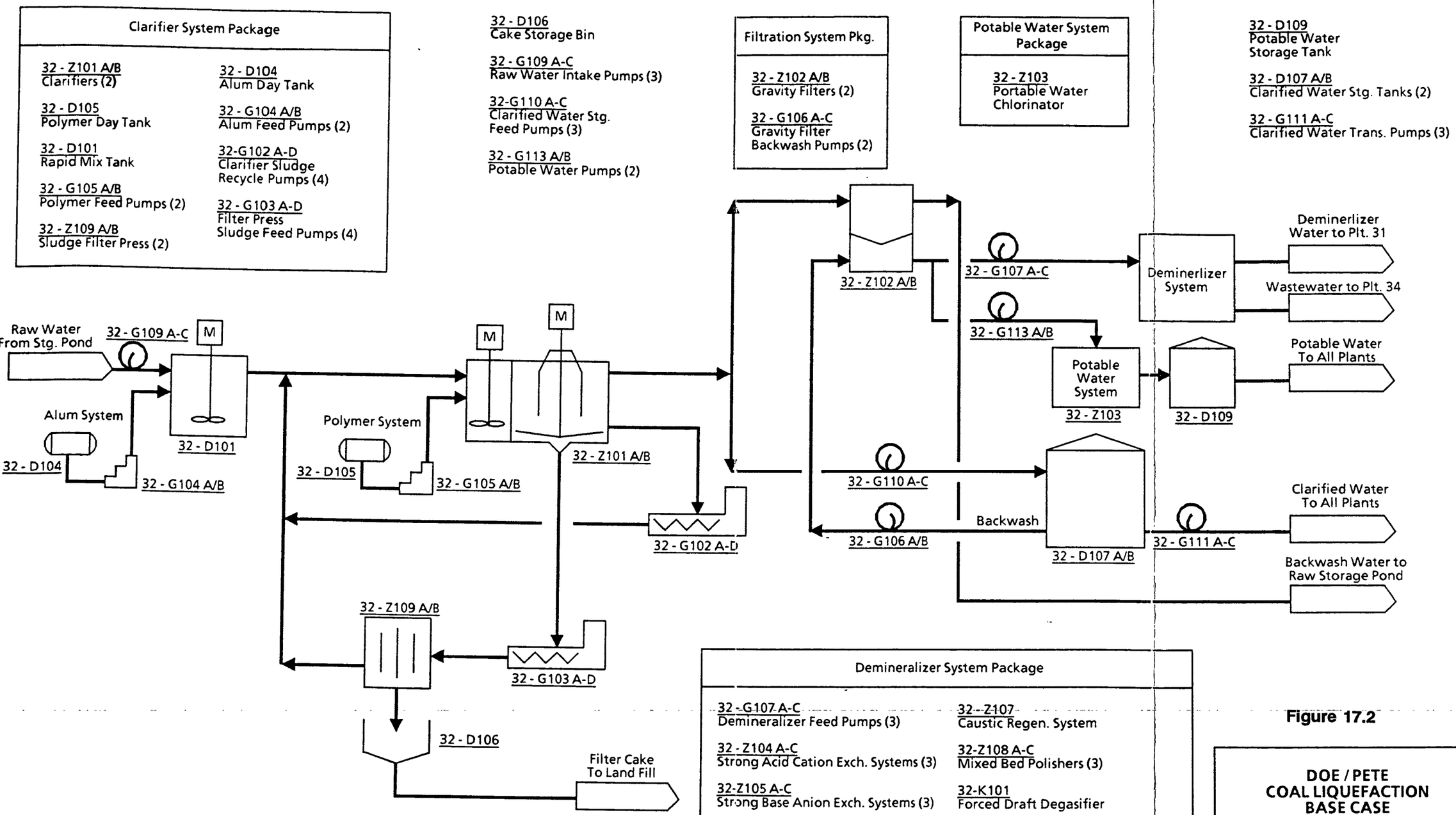

Figure 17.2

DOE / PETE
COAL LIQUEFACTION
BASE CASE

RAW WATER TREATMENT
PLANT 32

FLOW DIAGRAM

029-3

TABLE 17.1

TYPICAL RAW WATER ANALYSIS

Water Properties	Wyoming Area
NAME	**AVERAGE**
RAW WATER	
Temperature, °F (Range)	35-66
pH	8.0
Calcium as Ca, ppm	52
Magnesium as Mg, ppm	16
Bicarbonate as HCO_3, ppm	149
Sulfate as SO_4, ppm	123
Silica as SiO_2, ppm	13
Total Dissolved Solids, ppm	328
Conductivity, MOH	513

The clarified water is filtered using two dual filter media gravity filters. The required amount of the filtered water is fed to a potable water chlorinator system and the rest goes to the demineralizer. The balance of the clarified water goes to storage tanks.

Sludge resulting from the clarification (clarifier underflow) is filtered with a filter press and the filter cake is sent to an approved landfill. The small flow of filtrate water is recirculated back to the reactor/clarifier.

Cooling Water System

One conventional, wood cross flow tower with splash type fill cooling water system with mechanical induced-draft cooling tower is provided.

The cooling tower (32-E101 A to R) is designed to supply the 3,360 MMBTU/hr cooling requirement of the process plants.

An objective of the cooling water system design is to minimize the use of imported water for cooling tower makeup. This results in maximizing the reuse of treated process waste water, including cooling tower makeup. The rest of makeup water is supplied with clarified water.

The cooling water distribution system, as well as individual plant uses and return water temperatures are presented on Flow Diagram Figure 17.3.

The cooling tower capacity is as follows:

Duty	=	3,360 MMBTU/Hr
Inlet Temperature	=	115°F
Outlet Temperature	=	87°F
Circulation Rate	=	240,000 GPM
Water Evaporation Loss	=	0.1% x Delta T Avg. (i.e. 2.8%)
Drift Loss	=	0.2%
Blowdown	=	4 Cycles (0.25% each cycle)

Cooling water system is designed for a supply water temperature of 87°F.

The climatic conditions used for the cooling tower design are:

- Atmospheric press = 14.3 psig
- Air Temperatures
  - Inlet temperature: -6 to 95°F
  - Wet Bulb Temperature: 78°F
  - Dry Bulb Temperature: 95°F at 45% Relative Humidity

Co ling Tower Makeup

Makeup water to the cooling tower (32-E101 A to R) is clarified raw water and treated process waste water from Plant 34. The total makeup requirement is 9,600 GPM.

Cooling Water Requirement

The design cooling requirements for the complex, including power and steam generator plant (Plant 31) is served by an 18 cell cooling tower (32-E101 A-R), including two spare cells. The supply water flow rates are summarized in Table 17.2. The total cooling duty is 3,360 MM BTU/hr including a contingency allowance of approximately 10%.

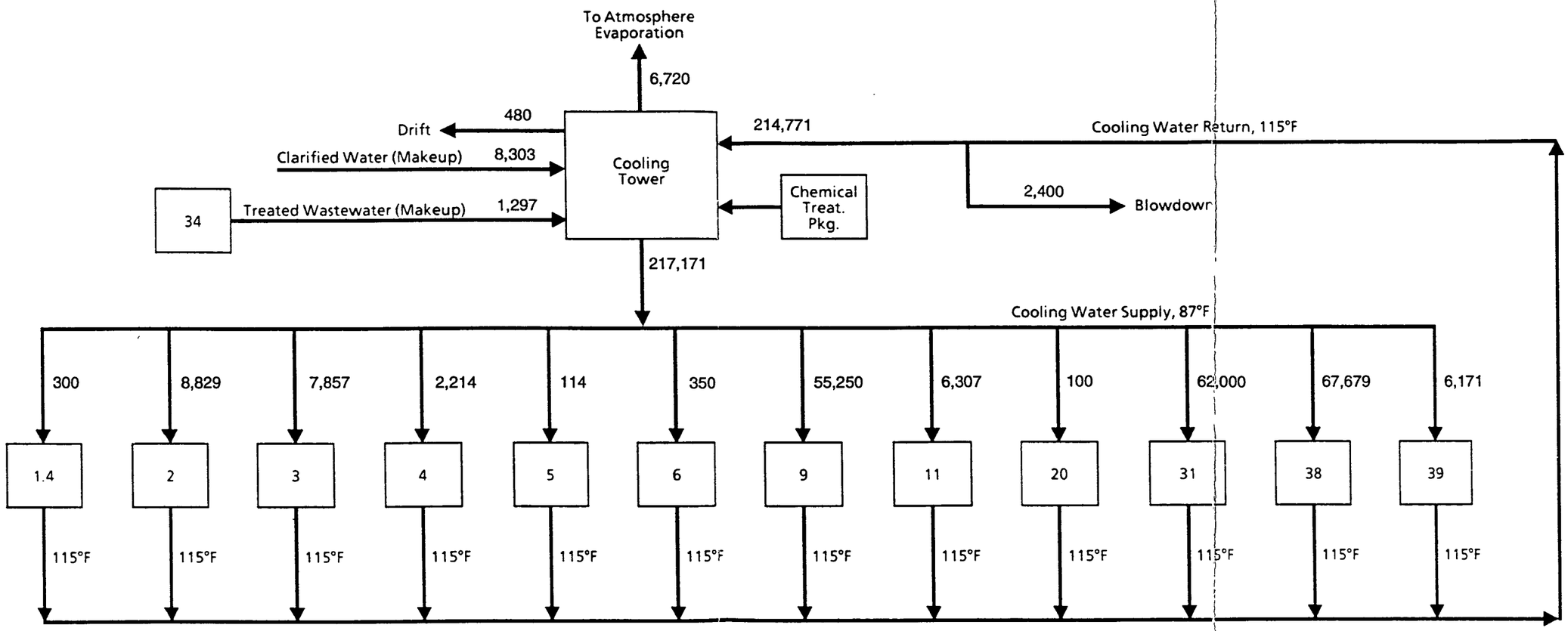

Notes:

1. Flows are for normal operation and in GPM
2. Plant Number in the Box

Figure 17.3

DOE/PETC
COAL LIQUEFACTION
LOW RANK COAL

COOLING WATER BALANCE
PLANT 32

0691029-1

Tabl 17.2

Overall CW and Makeup Water Balance – Low Rank Coal

Plant Name	Plant	Heat Duty MMBTU/H	CW Return Temp, F	CW Flow GPM
Coal Crushing/Drying	1	90.0	115	6,429
Slurry Drying	1.4	10.0	115	714
Coal Liquefaction	2	123.6	115	8,829
Gas Plant	3	110.0	115	7,857
Naphtha Hydrotreater	4	31.0	115	2,214
Gas Oil Hydrotreater	5	1.6	115	114
Hydrogen Purification	6	4.9	115	350
Critical Solvent De-Ashing	8	------	---	-----
H2 by Coal Gasification	9	773.5	115	55,250
Air Separation	10	------	---	-----
Sulfur Recovery	11	88.3	115	6,307
Raw Mat and Prod Storage	20	1.4	115	100
Steam/Power Generation	31	868.0	115	62,000
Raw/Cooling/Potable Water	32	------	---	-----
Fire Protection	33	------	---	-----
Waste Water Treatment	34	------	---	-----
Solid Waste Disposal	37	------	---	-----
Ammonia Recovery	38	947.5	115	67,679
Phenol recovery	39	86.4	115	6,171
Sub-Total		3,136.2	115	224,014
Contingency (~7%)				15,986
Total Design Flow				**240,000**
CW Supply Temperature, F	87			
Average CW Return Temp, F	115			

Requirement of Makeup Water		
Evapoaration Loss	2.8%	6,720
Drift Loss	0.2%	480
Blowdown (4 Cycles)	1.0%	2,400
Total, GPM		**9,600**
Supply of Makeup Water	Plant	
Treated Waste Water	34	2,341
Clarified Water	32	7,259
Total, GPM		**9,600**

17.2 Process D scription and Block Flow Diagram

Raw Water Treatment

Overall normal flow distribution of raw, clarified and potable water is shown on Flow Diagram , Figure 4.2.

Raw water is supplied at the plant battery limit. The water flows to a storage pond. The pond has a storage capacity of seven days supply of water. The storage pond water is screened to protect the intake pumps. Three 50% capacity pumps (32-G109 A-C) supply water to the reactor/clarifiers (32-101 A/B) via a rapid mix tank (32-D101). Alum is added with pump (32-G104 A/B) from a day tank (32-D104) to the rapid mix tank. Polymer is charged to the reactor/clarifier from a polymer day tank (32-D105) with pump (32-G105 A/B). The small underflow from the clarifier is recirculated with clarifier sludge recycle pump (32-G102 A-D) to the reactor.

After clarification, about 9,000 GPM of clarifier effluent, is diverted through dual media gravity filters (32-Z102 A/B). The balance of the reactor/ clarifier effluent is pumped with three 50% capacity clarified water storage pumps (32-G110 A-C) to the clarified water storage tanks (32-D107 A/B).

When the pressure drop across the gravity filters reaches the design value, they are backwashed with clarified water with filter backwash pumps (32-G106 A/B). The backwash water, containing the filtered solids, is returned to the storage pond. An estimated 12% of the throughput volume is required for backwash. The operation is intermittent.

Reactor/clarifier underflow containing an estimated 0.5-2 wt% of solids is pumped through the sludge filter press (32-Z109 A/B) with feed pump (32-G103 A-D). The filtrate is recycled to the reactor/clarifier and the filter cake to the storage bin (32-D106) from where it is periodically loaded onto trucks that transport it to an approved landfill.

Filtered clarified water is further treated in the demineralizer (ion exchange) system where it passes through strongly-acid cation exchangers (32-Z104 A-C), and degassed in the forced draft degasifier (32-K102) to remove CO_2. Degassed water is pumped with three, 50% capacity degasified water transfer pumps (32-G108 A-C), and passes through strongly-basic anion exchangers (32-Z105 A-C). Finally the water passes through mixed bed polishers (32-Z108 A-C) and to the demineralized water storage tanks (32-D108).

Demineralized water is fed to process steam generators, condensate tanks and as makeup water in the power and steam generation plant (Plant 31).

Regeneration of the strongly-acid cation exchangers and mixed bed polishers is performed by acid regeneration system (32-Z106). Similarly, regeneration of the strongly-basic anion exchangers and mixed bed polishers is carried out by caustic regeneration system (32-Z107).

The regeneration of a demineralizer is controlled automatically. The sequence of regeneration is: backwash, regeneration, slow rinse and fast rinse. The regeneration is performed sequentially.
The backwash, regeneration and rinse waste water is sent to the waste water treatment plant (Plant 34).

About 100 GPM of effluent from the gravity filters is pumped to the potable water gas chlorinator (32-Z103) where it is chlorinated and pumped to the potable water storage tank (32-D109). This water serves all the plants and buildings.

Wat r Distribution

Overall water distribution flow of the complex is illustrated on Flow Diagram, Figure 4.2. The recoverable waste and sour water from all plants are collected and treated in the waste water treatment plant (Plant 34). Treated water is used as makeup water in coal cleaning/preparation plant (Plant 1).

Cooling Water

About 220,000 gallons of water is returned from the complex and is cooled with an 18 cell (2 spare) cross flow tower(32-E101A-R). The cooled water from the basin of th cooling tower is supplied to the main header supply line with six motor driven, 40,000 gpm cooling tower pumps (32-G101 A-F) including one spare pump. Cooling tower supply water temperature is controlled manually by turning on/off the cell fans.

Sulfuric acid is injected in the center of the supply water main header pipe for pH control. The polymeric dispersant corrosion inhibitor and non-ionic surfactant for removing microbiological slime deposits are uniformly distributed in the cooling tower basin with a chemical treating system.

For reliability, electric power is provided from the power and steam generation plant (Plant 31), which has three alternates of providing power during emergencies.

Blowdown of the cooling tower is about 2,400 gpm from the main return line to the cooling tower. Blowdown water is processed in the sewage and effluent treatment plant (Plant 34).

Makeup water for the cooling tower comes from the clarified water storage tank.

17.3 Major Equipment Summary

A major equipment summary for the plant is included in Table 17.3

Tabl 17.3
Maj r Equipment Summary

Type of Equipment: Vessels and Tanks

Equipment No.	Equipment Description	Length (T-T in ft.)	Diameter (ID in ft.)	Material	Design Conditions Psig	oF	Remarks	No. of Vessels
32-D101	Rapid mix tank with high speed mixer	20	10	CS	10	100	15 HP mixer	1
32-D104	Alum feed day tank	15	7.5	CS	10	100	5000 Gallons	1
32-D105	Polymer feed day tank	10	4	CS	10	100	1000 Gallons	1
32-D106	Cake storage bin			CS	ATM	100	10'x12'x12'	1
32-D107A/B	Clarified water storage tanks	48	200	CS	ATM	100	API STD TANK	2
32-D108A/B	Deminerlized water storage tanks	40	60	CS	ATM	100	API STD TANK	2
32-D109	Potable water storage tank	48	30	CS	ATM	100	API STD TANK	1
32-D110	Caustic tank	25	20	CS	10	200		1
32-D111	Acid tank	20	15	SS	10	200		1

Type of Equipment: Heat Exchangers

Equipment No.	Equipment Description	Duty (MM Btu/hr)	Type of Exchanger	Tube Material	Tube Design psig/oF	Shell Material	Shell Design psig/oF	Area Ft2	No. of Exch.
32-E101A-R	Cooling Towers 18 + 2 spare cells	157	Wood crossflow with splash type fill. total capacity 180,000 gals/hour.						18

Tabl 17.3 Major Equipment Summary - continued

Type of Equipment: Pumps

Equipment No.	Equipment Description	Flow Rate GPM	Delta Pres PSIa	Brake HP	Design Conditions Pres (psig)	Design Conditions Temp (oF)	Driver	Est. Driver HP	No. of Pumps
32-G101A-F	Cooling Tower Pumps 5 + 1 spare	40,000	65	2121	75	100	Elec	2500	9
32-G102A-D	Clarifier sludge recycle pumps (no spare)	25	15	2	50	100	Elec	5	4
32-G103A-D	Filter press sludge feed pumps (2 spare)	150	50	6	75	100	Elec	10	4
32-G104A/B	Alum feed pumps (one spare)	2	50		75	100	Elec	1	2
32-G105A/B	Polymer feed pumps (1 spare)	5	50		75	100	Elec	1	2
32-G106A/B	Gravity filter backwash pumps (1 spare)	1200	30	29	50	100	Elec	50	2
32-G107A-C	Deminerlizer feed water pumps (1 spare)	550	75	34	50	100	Elec	50	3
32-G108A-C	Degasified water transfe pumps (1 spare)	550	76	34	50	100	Elec	50	3
32-G109A-C	Raw water intake pumps (one spare)	7000	15	86	50	100	Elec	100	3
32-G110A-C	Clarified water stg feed pumps (one spare)	6400	31	162	50	100	Elec	200	3
32-G111A-C	Clarified water transfer pumps (one spare)	6400	75	392	100	100	Elec	500	3
32-G112A/B	Deminerlized wtr trans. pumps (one spare)	1100	50	45	75	100	Elec	50	2
32-G113A/B	Potable water transfer pumps(one spare)	120	75	7	100	100	Elec	10	2
32-G114A/B	Caustic metering pumps (one spare)	1	75	0	100	200	Elec	1	2

Tabl 17.3 Major Equipment Summary - continued

Type of Equipment: Air Blowers

Equipment No.	Equipment Description	Flow Rate (ACFM)	Diff Pres (psi)	Brake Horsepower	Design Conditions Pres (psig)	Design Conditions Temp (oF)	Driver	Est. Driver HP	No. of Equip.
32-K101A-R	Cooling Tower Fans (16 + 2 Spare)			189			Elec	200	27
32-K102	Forced draft degasifier			1.2			Elec	2	1

Type of Equipment: Miscellaneous

Equipment No.	Equipment Description	Flow Rate	Other Design Criteria	Design Conditions Pres (psig)	Design Conditions Temp (oF)	Driver	Est. Driver HP	No. of Equip.
32-Z101A/B	Clarifier/Reactors with mixers	7000	Two Mixers	ATM	100	Elec	10	2
32-Z102A/B	Gravity filters			ATM	100			2
32-Z103	Potable water gas chlorinator							1
32-Z104A-C	Strong acid cation exchangers (1 spare)	1100	ASME	100	150			3
32-Z105A-C	Strong base anion exchangers (1 spare)	1100	ASME	100	150			3
32-Z106	Acid regeneration system		one acid bulk tank two acid pumps			Elec	1	1
32-Z107	Caustic regeneration system		one caustic bulk tank, 2 caustic pumps, one steam heater			Elec	1	1
32-Z108A-C	Mixed bed polishers (one spare)			75	150			3
32-Z109A/B	Sludge filter press			100	100			2
32-Z110	Cooling tower chemical treat package		Nalco tower master plus Liquid metering pump, Water meter					1

17.4 Utility Summary

The utility requirement for the plant is summarized below.

The raw water requirement for demineralized water, potable water and clarified water is shown in Table 17.4.

Electricity requirement for this plant is 15,000 kW.

Table 17.4

Raw Water Requirement Breakdown

Plant Name	Plant No.	Water Makeup GPM	Safety Margin	Design Capacity GPM
Demineralized Water				
BFW Makeup	31	616	17%	720
Boiler Blowdown	31	306	8%	330
Hydrogen Purification	6	82	22%	100
Sub-Total		1,004	15%	1,150
Potable Water				
Drinking Water	All	100	20%	120
Sub-Total		100	20%	120
Clarified Water				
Naphtha Hydrotreater	4	17	12%	19
Gas Oil Hydrotreater	5	84	14%	96
Hydrogen Production	9	1,025	16%	1,185
Cooling Tower	32	9,600	11%	10,630
Utility Stations	All	550	9%	600
Sub-Total		11,276	11%	12,530
Total Makeup Water Requirement		12,380	11%	13,800
Treater Water Recycle	34	3,602	6%	3,800
Net Raw Water Requirement		8,778	14%	1,000

18. PLANT 38

18. Plant 38 (Ammonia Recovery)

18.1 Design Basis, Criteria and Considerations

Ammonia Recovery (Plant 38) and Phenol Recovery (Plant 39) are closely related and together constitute the Project Sour Water Stripping, with the purpose of minimizing both raw water consumption and effluent discharge to public waters during normal plant operation. Sour water streams are segregated and treated as necessary to make them suitable for reuse, if practical, in lieu of fresh water.

Sour Water Treating

ARISTECH PHOSAM-W is a development technology of USX Corporation, licensed by USX Engineers and Consultants Inc. (UEC). The process removes free ammonia and acid gases from the sour waters. In the absorber the ammonia is chemically absorbed from the sour water stripper vapors by a circulating water solution of ammonium phosphate.

In the stripper, the ammonia is recovered from the solution and the solution is regenerated for feed to the absorber.

The aqueous ammonia vapor from the stripper overhead is condensed and fed to the fractionator where it is distilled under pressure to produce a high quality anhydrous product.

Design Basis

The capacity of the PHOSAM-W unit is 3400 GPM of concentrated sour water plant 2, 3, 4, 5, 6, 8, 9 and 11. This allows approximately 10 percent spare capacity to permit work-off of sour water produced during non scheduled shutdowns. Tankage for five days storage of sour water feed is also provided to smooth out operations of the PHOSAM-W plant. Feed compositions and quantities used in this design are given in Table 18.1, attached. There are 167 TPSD of anhydrous ammonia recovered in this process. The yields are based on the Breckinridge Initial Effort plant and have been reviewed by the licensor and deemed as reasonable.

Table 18.1

Design Basis and Material Balanc for Plant 38

PLANT 38 : INPUT

Stream No.		1	2	3	4	5	6	7	8	9
Components (Lb/Hr)	PL-1/1.4 Sour Water	PL-2 Sour Water	PL-3 Sour Water	PL-4 Sour Water	PL-5 Sour Water	PL-6 Sour Water	PL-8 Sour Water	PL-9 Sour Water	PL-11 Sour Water	Total Sour Water
H2O	522,113	862,809	883	13,336	63,393	47,691	14,544	448,169	15,150	1,988,088
H2S		1,092		137	152	86		80		1,547
NH3 (Free)		10,220		355	2,226	760		502		14,063
CO2		25,904				1,680		6,303		33,887
H2								6		6
C1		20				2		1		23
Organics		12				276		5		293
Phenolics		3,827						1,104		4,931
Total, PPH	522,113	903,884	883	13,828	65,771	50,495	14,544	456,170	15,150	2,042,838
Liquid-GPM	1,044	1,808	2	28	132	101	29	932	30	4,086

PLANT 38 : OUTPUT

Stream No.	10	11A	11B	12						
Components (Lb/Hr)	Acid Gas to PL-11	Water to PL-9	Water to PL-39	NH3 Product						Total Output
H2O	5,106	459,870	1,523,051	61						1,988,088
H2S	1,539	2	6							1,547
NH3 (Free)	9	36	114	13,904						14,063
CO2	33,817	17	53							33,887
H2	6									6
C1	21	1	1							23
Organics	273	5	15							293
Phenolics	325	1,104	3,502							4,931
Total, PPH	41,096	461,035	1,526,742	13,965						2,042,838
Liquid-GPM	------	922	3,053	------						4,086
Solids-TPD	------	-----	------	167						167

18.2 Proc ss Description and Process Flow Diagram

Sour water is processed through the PHOSAM-W process with as much of the ammonia and hydrogen sulfide free water as possible being returned to Plant 9. The remaining water goes to the Phenol Recovery Unit (Plant 39). The acid gas product is sent to the Sulfur Plant (Plant 11) where the H_2S is converted to molten sulfur. The process is schematically represented in process flow diagram, Figure 18.1.

Sour water from the Coal Liquefaction complex,i.e.; Coal Liquefaction (Plant 2), Gas Plant (Plant3), Naphtha Hydrotreater (Plant 4), Gas Oil Hydrotreater (Plant 5), Hydrogen Purification (Plant 6), ROSE unit (Plant 8), Hydrogen Production by Coal Gasification (Plant 9), and Sulfur Recovery (Plant 11) are combined in the sour water feed tanks (20-D116A/B). The combined feed is preheated against the PHOSAM-W H_2S Stripper Feed/Bottoms Exchanger (38-E101A/B). The feed is then charged to th unit's 3 Sour Water Strippers (38-C101A/B/C) where acid gas and free ammonia is stripped from the water (See Figure 18.1). The stripped water is then cooled (38-E103A through F) and (38-E111A/B/C/D) and preferentially returned to the process units for reprocessing or to the Phenol Recovery Unit (Plant 39) for further treatment. Heat for the stripper is supplied by a 150 psig steam reboiler (38-E102A through F).

The Sour Water Stripper overhead vapor goes to the Ammonia Absorber (38-C102) where it is contacted with recirculated ammonium phosphate solution. Vapors released from the rich solution in the PHOSAM Contactor (38-E103) contain some ammonia and essentially all of the entrained acid gases. These vapors are recycled to the spray section of the absorber (38-C102) to recover the ammonia and purge the system of acid gases. About 75 percent of the ammonia is recovered here. The remaining vapors flow upward through trays where the ammonia is counter-currently scrubbed with lean ammonium phosphate solution returning to the top of the absorber from the regeneration section of the plant. The solution with the absorbed ammonia, drains from the bottom tray into the absorber sump.

The vapor leaving the Ammonia Absorber contains approximately 6,000 ppmv ammonia. It passes to the Absorber Quench Cooler (38-E105A through M) where enough ammoniacal water is condensed to lower the ammonia content of the gas to less than the specified 1,000 ppmv. The gas then passes to the Sulfur Plant (Plant 11). The ammoniacal water is recycled back to the H_2S Stripper with the sour water feed.

The net flow of the rich absorber solution is taken off the discharge of the Absorber Circulation Pump (38-G102A/B) and heated against the hot lean solution from the bottom of the PHOSAM-H_2S Stripper Bottoms/Lean Solution Exchanger(38-E104A/B). The heated rich solution is then flashed in the PHOSAM Contactor (38-C103) to remove acid gases which are recycled to the Ammonia Absorber.

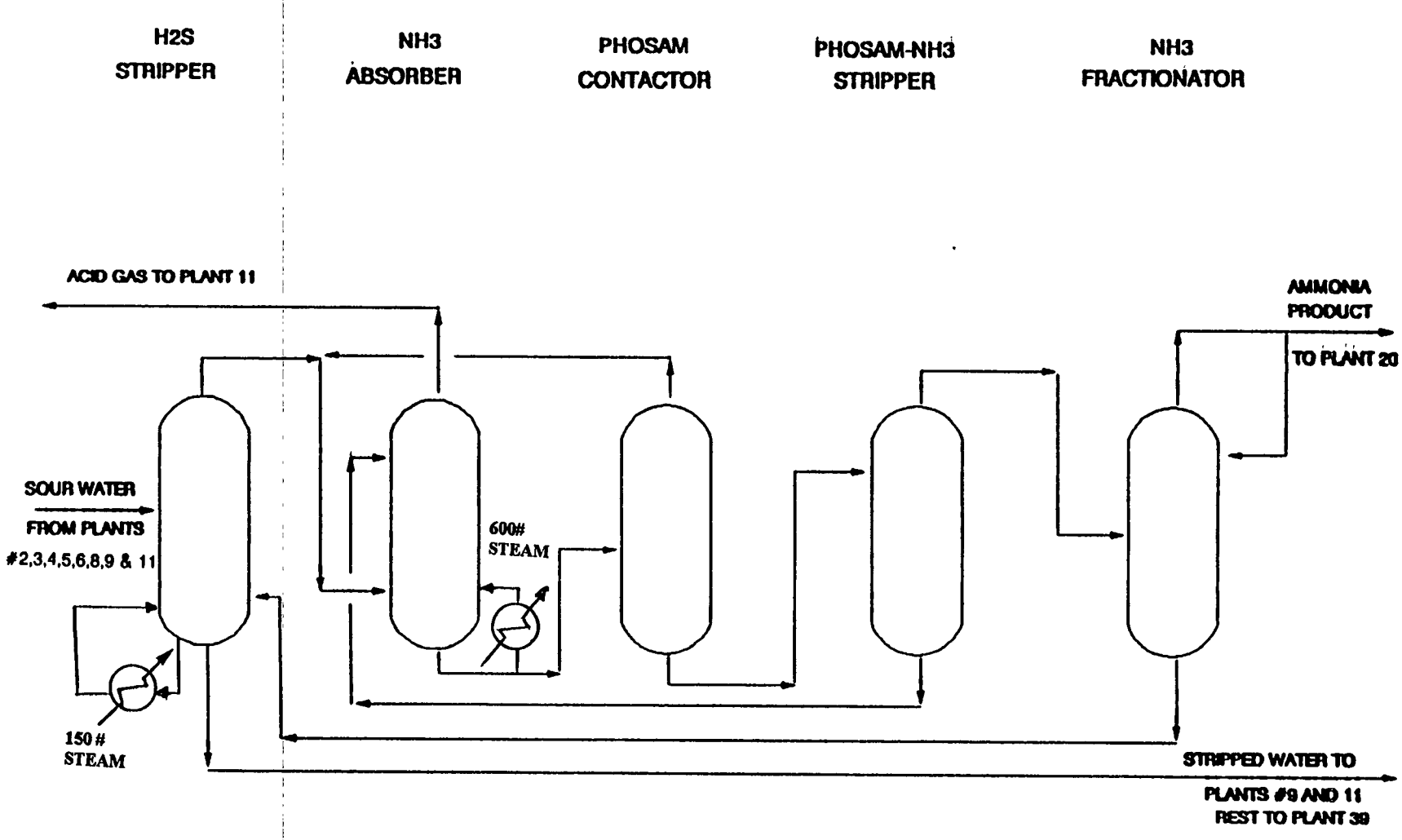

Figure 18.1 Process Flow Diagram

PROCESS FLOW SKETCH
PHOSAM-W AMMONIA RECOVERY

The rich solution, now free of acid gases, is pumped from the PHOSAM Contactor and preheated in the upper section of the PHOSAM-Ammonia Stripper Condenser (38-E108A through J). The preheated rich solution flows to the PHOSAM-Ammonia Stripper (38-C104) which operates at elevated pressure.

The PHOSAM-Ammonia Stripper removes the absorbed ammonia and the lean solution is recycled to the Ammonia Absorber. The Ammonia Absorber Reboiler (38-E106A/B/C/D) is heated with 600 psig steam, to provide the necessary heat for the stripper. The hot, lean solution is cooled first against the PHOSAM Feed Exchanger (38-E101A/B), then to preheat the sour water feed to the stripper and finally it is cooled with cooling water (38-E104A/B) before entering the top of the Ammonia Absorber.

The overhead vapor from the PHOSAM-Ammonia Stripper, containing 10 to 20 weight percent ammonia passes through the two section PHOSAM-Ammonia Stripper Condenser(38-E108A through J). The vapor is cooled and partially condensed in the upper section by exchange with the stripper feed. Cooling water condenses the remaining vapor in the lower section. The PHOSAM-Ammonia Stripper pressure is automatically controlled by running the lower section as a flooded condenser. The condensed aqueous ammonia is maintained at its boiling point with a warm vapor by pass. The condensate flows by gravity to the PHOSAM Stripper Overhead Drum (38-C106).

Th aqueous ammonia is pumped from the PHOSAM Stripper Overhead Drum into Ammonia Fractionator (38-C105) where it is fractionated into an overhead anhydrous ammonia product (99.5% NH_3 min.) and a bottoms product containing a small amount of ammonia. The alkaline, pressurized hot water from the bottom of the fractionator is flashed directly into the bottom of the H_2S Stripper to provide a portion of the boil-up requirement. The Ammonia Fractionator Reboiler (38-E109) is heated with 600 psig steam and provides the necessary stripping vapor for fractionation of the ammonia and water. The overhead vapor is condensed with cooling water and the tower pressure controlled via a flooded condenser. Part of the overhead product is used for reflux to the top of the fractionator and the rest goes to Tankage (Plant 20).

18.3 Major Equipment Summary

The Equipment Summary for PHOSAM-W Ammonia Recovery is shown in Table 18.2.

18.4 Utility Summary

Steam:	
• 600 psig, saturated	320,520 lb/hr
• 150 psig saturated	512,098 lb/hr
Cooling water circulated at 87°F	67,679 gpm
Makeup Water	nil
Electricity (operating)	1,349 KW

Table 18.2 Major Equipm nt Summary

Type of Equipment: Columns and Drums

Equipment No.	Equipment Description
38–C–101	Sour Water Stripper
38–C–102	Ammonia Absorber
38–C–103	Contactor
38–C–104	Stripper
38–C–105	Fractionator
38–C–106	Fractionator Feed Drum
38–C–107	Fractionator R/F Drum
38–C–108	Phosphoric Storage

Type of Equipment: Heat Exchangers

Equipment No.	Equipment Description
38–E–101	Feed Preheater
38–E–102	Sour Water Stripper R/B
38–E–103	Stripped Water Cooler
38–E–104	Lean Solution Cooler
38–E–105	Absorber Quench Cooler
38–E–106	Solution Exchanger
38–E–107	Stripper Reboiler
38–E–108	Stripper Condenser
38–E–109	Fractionator Reboiler
38–E–110	Fractionator Condenser
38–E–111	Stripped Water Trim Cooler

Table 18.2 Maj r Equipment Summary - continu d

Type of Equipment: Pumps	
Equipment No.	Equipment Description
38-G-101	Stripped Water Pumps
38-G-102	Absorber Circulating Pumps
38-G-103	Quench Circulating Pumps
38-G-104	Rich Solution Pumps
38-G-105	Fractionator Feed Pumps
38-G-106	Fractionator R/F Pumps
38-G-107	Phos Acid Addition Pump

19. PLANT 39

19. Plant 39 (Ph nol Recovery)

19.1 Design Basis, Criteria and Considerations

Ammonia Recovery (Plant 38) and Phenol Recovery (Plant 39) are closely related and together constitute the Project Sour Water Stripping, with the purpose of minimizing both raw water consumption and effluent discharge to public waters during normal plant operation. Sour water streams are segregated and treated as necessary to make them suitable for reuse, if practical, in lieu of fresh water.

Sour Water Treating

Dephenolization is a process technology development of LTV Corporation, licensed by the Packaged Plants Division of Glitsch Inc., for phenols recovery from sour water. This is accomplished by means of liquid-liquid extraction, in which the phenols are recovered as a salable product consisting of phenol and its homologs, cresols and xylenols. The phenols are extracted from the sour water with an organic solvent. The solvent is recovered by fractionation from the extracted phenols.

Design Basis

The capacity of the Dephenolization unit is 3,050 GPM of stripped sour water from the Ammonia Recovery Unit (plant 38). This allows approximately 10 percent spare capacity to permit work-off of sour water produced during nonscheduled shutdowns. This unit recovers 45 TPSD of phenols. Dephenolated water goes preferentially to the Coal Liquefaction (Plant 2) as wash water. The rest goes to the Sewage and Effluent Treatment (Plant 34) where it is treated by Pac/Biological treatment to remove the organics. It is then clarified and filtered before going to the cooling tower as make-up. The yields are based on the Breckinridge Initial Effort plant and have been reviewed by the licensor and deemed as reasonable.

19.2 Process Description and Process Flow Diagram

The Phenol recovery plant is schematically shown in the process flow diagram, Figure 19.1. As shown in this figure, sour water is processed first through the PHOSAM-W process where the ammonia and hydrogen sulfide are stripped out. As much of the phenol bearing water is returned to plant 9 as possible. This destruction of phenols reduces the size of both the Phenol Recovery Unit (Plant 39) and the Effluent Treatment Plant (Plant 34).

Dephenolization Section

Phenol bearing sour water from the Ammonia Recovery Plant (Plant 38) is pumped to the Saturation Column (39-C101) where the light ends are stripped out and sent to the Solvent Stripper (39-C106). (See Process Flow Diagram 39-D-B-1). A side stream is sent to the Solvent Recovery Scrubber (39-C110). The sour water is then charged to the top of the Extraction Column (39-C102A/B), where it is counter-currently contacted with solvent. Raffinate (dephenolized water) is fed to the Solvent Stripper Column, where entrained solvent is removed by distillation. The dephenolized water is pumped to Plant 34, the sewage/effluent treatment plant. From Plant 34 the water is routed to the cooling towers. The gaseous solvent stripper overhead is returned to the bottom section of the Saturation Column.

Extract from the top of the Extraction Column flows under interface control, to maintain a constant interface level between extract and liquor at the top of the Extractor, to the Solvent Distillation Column (39-C107). The Solvent Distillation Column separates the solvent and the extracted phenols. The overhead product is condensed and is pumped back to the Extractor as recycle solvent. A side stream of the overhead product is pumped back to the column as reflux. The bottoms product is pumped to the Phenol Column (39-C112).

The Phenol Column operates under vacuum to reduce the solvent content of the crude phenols to less than one percent. The overhead product is condensed and sent to the Solvent Distillation Column (39-C107), with a side stream returned to the Phenol Column as reflux. The bottoms product is circulated to the Solvent Recovery Scrubber (39-C110) with a side stream being cooled as phenol product and sent to storage in Tankage (Plant 20).

Gaseous overhead product from the Solvent Recovery Scrubber is returned to the Saturation Column and the bottoms product is recycled to the Phenol Column.

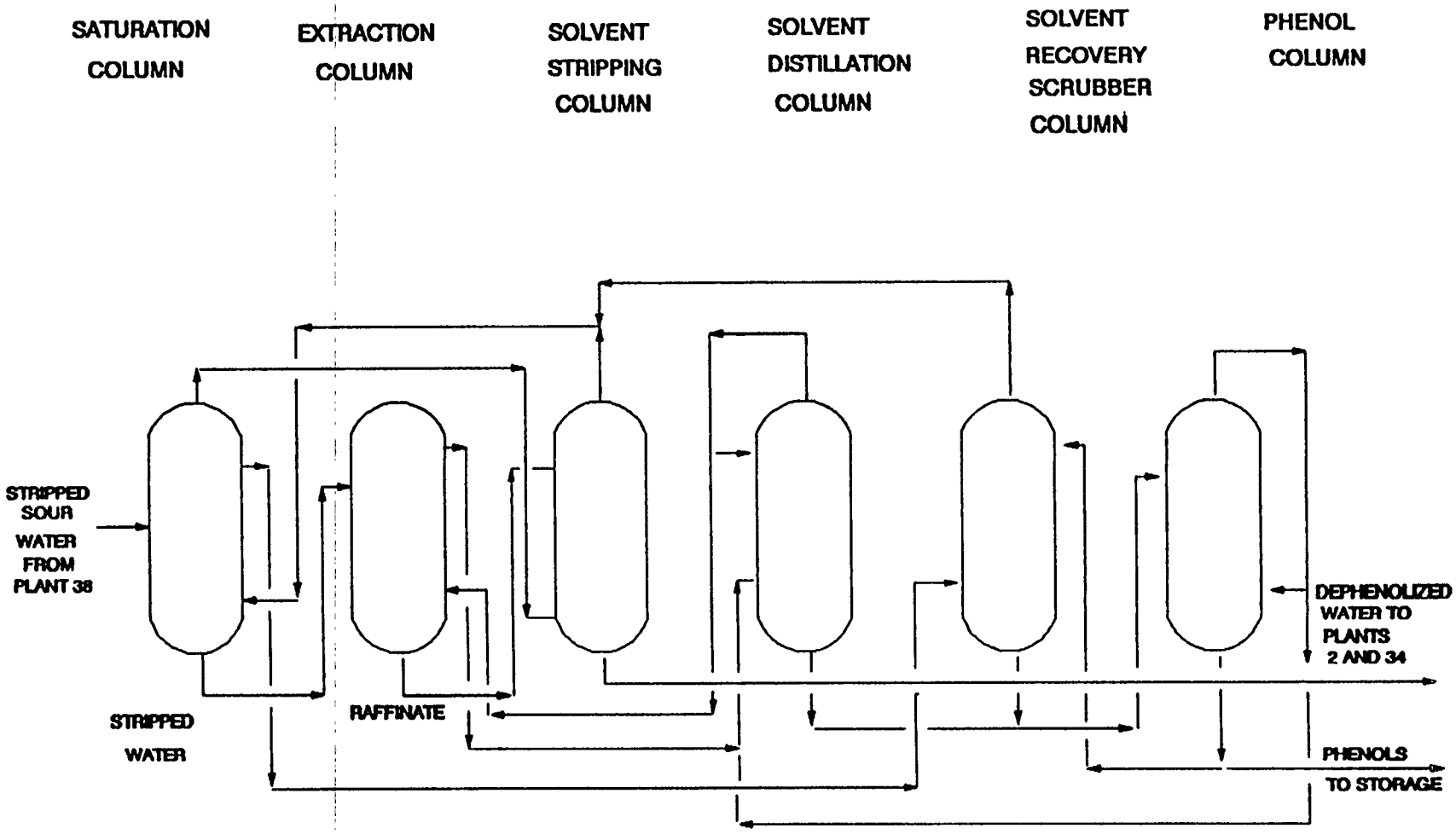

Figur 19.1

PROCESS FLOW SKETCH 39-D-B-1
DEPHENOLIZATION

PHENOL R

19.3 Material Balanc

The overall material balance for the Phenol Recovery Unit (Plant 39) including the feed composition and predicted product quantities and compositions are presented in Table 19.1. The phenol stream will have a minimum purity of 87.5 percent mixed Phenols.

Table 19.1

PLANT 39 : INPUT

Components (Lb/Hr)	1 PL-38 Stripped Waste Water	30 Condensate MakeUp	24 Nitrogen MakeUp	26 CO2 MakeUp	Solvent MakeUp	Total Input
* H2O	1,523,051	1,343				1,524,394
H2S	6					6
NH3 (Free)	114					114
CO2	53					53
N2			314			314
C1	1					1
Organics	15					15
Phenolics	3,502					3,502
Solvent					27	27
Total, PPH	1,526,742	1,343	314	0	27	1,528,426
Liquid-GPM	3,053	3	-----	-----	-----	3,056

PLANT 39 : OUTPUT

Components (Lb/Hr)	20-1 Treated Water to PL-2	20-2 Treated Water to PL-34	3 Acid Gas to Incinerator	32 Phenol Product		Total Output
H2O	350,356	1,173,550	102	386		1,524,394
H2S		5	1			6
NH3 (Free)		114				114
CO2		53				53
N2		86	228			314
C1		1				1
Organics		14		1		15
Phenolics		109		3,393		3,502
Solvent		25		2		27
Total, PPH	350,356	1,173,957	331	3,782		1,528,426
Liquid-GPM	700	2,348	-----	-----		-----
Solids-TPD	-----	-----	-----	45		-----
Gas-MMSCFD	-----	-----	0.1	-----		-----
Gas-MW	-----	-----	23.9	-----		-----

19.4 Major Equipment Summary

The equipment summary for the Phenol Recovery Unit is shown in Table 32.2.

Table 19.2

Major Equipment Summary

PLANT 39 – DEPHENOLIZATION

COLUMNS

Equipment No.	Equipment Description
39-C-101	Saturation Column
39-C-102	Extractor
39-C-103	Raffinate Separator
39-C-104	Extract Separator
39-C-105	Slop Drum
39-C-106	Solvent Stripper
39-C-107	Solvent Distillation Column
39-C-108	Reflux Drum
39-C-109	Compressor Suction Drum
39-C-110	Solvent Recovery Scrubber
39-C-111	Solvent Separator
39-C-112	Phenol Column
39-C-113	Crude Phenol Drum
39-C-114	Solvent/phenol Mix Drum
39-C-122	Solvent Drum

EXCHANGERS

Equipment No.	Equipment Description
39-E-101	Raffinate Heater
39-E-102	Solv Dist Col OHD Cond
39-E-103	SDolv Dist Col R/B
39-E-104	Crude Phenol Cooler
39-E-105	Phenol Col OHD Cond
39-E-106	Phenol Col R/B
39-E-107	Waste Water Cooler

Tabl 19.2 Major Equipment Summary - continued

PUMPS

Equipment No.	Equipment Description
39-G-101A/B	Raffinate Pump
39-G-102A/B	Slop Pump
39-G-103A/B	Extract Pumps
39-G-104A/B	Sour Water Pump
39-G-105A/B	Solvent R/F Pump
39-G-106A/B	Solv/Phenol Pump
39-G-107A/B	Crude Phenol Pump
39-G-108A/B	Solvent Make-up Pump

COMPRESSORS

Equipment No.	Equipment Description
39-K-101	Stripping Gas Comp.

19.4 Utility Summary

Steam:	
• 150 psig, saturated	32,348 lb/hr
• 50 psig saturated	84,962 lb/hr
Cooling water circulated at 87°F	6,171 gpm
Makeup Water	nil
Electricity (operating)	1,123 kW

20. PLANT 21

20. Plant 21 (Int rc nnecting Piping Syst m)

20.1 Design Basis, Criteria and Considerations

Plant 21 includes the fuel gas blending and distribution system and the interconnecting process and utility piping between process plants and offsites. All above ground and underground piping systems are included except fire water piping which is included in Fire Systems (Plant 33) and plant flare headers which are included in the Flare System (Plant 19). In general, water distribution piping is underground and all other piping is located above ground on pipe racks.

Fuel gas users in the complex include process fired heaters and combustion turbine generators (CTG), the coal drying heaters. Fuel for these users must be clean gas with virtually no sulfur content so that no treatment of stack gases for sulfur removal is needed.

Two types of fuel gas are produced within the complex. One is classified as high BTU gas and the other as medium BTU gas. The high and medium BTU gases have been segregated in two separate distribution systems. Natural gas can be added to either system to meet the fuel gas requirements and to maintain consistency within each system. The gas fired equipment will burn the high BTU gas while the medium BTU gas system goes to Plant 31 to produce steam and power.

Fu l Gas System

The rates and specifications of the plant fuel gas available from two sources within the facility and natural gas are summarized in Table 20.1. The rates and compositions of the first two sources in the table are from the material balances included on the process flow diagrams for the Gas Plant (Plant 3) and Hydrogen Production by gasification (Plant 9). Natural gas composition is based on the analysis used in this complex.

The material balance and equipment design for Plant 3 and Plant 9 were developed based upon a preliminary design basis.

Int rconnecting Piping

The interconnecting piping consists of all the process lines and racks connecting one process plant to another, the utility headers and the branches to each process. Pipes are sized based on pressure drop and fluid velocity considerations.

The cooling water system is routed underground and process lines and other utilities are routed on the pipe racks. All the steam, condensat and boiler feedwater lines are insulated. The headers, one for each utility service, include the following:

- 600 psig steam (superheated)
- 150 psig steam (saturated)
- 50 psig steam (saturated)
- Instrument air
- Utility air
- Utility water
- Cooling water supply
- Cooling water return
- 600 psig boiler feedwater
- Potable water
- High BTU fuel gas
- Medium BTU fuel gas
- Natural gas
- Nitrogen Gas

Storm sewer, sanitary sewer, and process wastewater lines are included in the scope of Sewers and Wastewater Treating (Plant 34).

TABLE 20.1

FUEL GAS AVAILABILITY

(All Rates are MLb/Hr)

Stream Component	High BTU Gas From Plant 3	Medium BTU Gas from Plant 9	Natural Gas
Hydrogen	2.7	18.9	--
Carbon Dioxide	0	11.4	17.6
Carbon Monoxide	0	21.6	--
Methane	39.8	8.0	153.7
Ethane	28.5	0.0	9.2
Propane	0.1	0.0	3.2
Water	0.3	0.0	--
N_2	13.8	14.5	2.8
Argon	0.0	0.0	--
TOTAL (MLb/Hr)	85.2	74.4	186.5
LHV, BTU/SCF (1)	776	256	884
MM BTU/hr (LHV)	1,567	1,119	3,569

(1) Heating values are BTU per scf based on 379 ft^3 per pound-mole. Maximum operating pressure for high BTU gas is 75 psig and minimum pressure 50 psig at the battery limits of any user. Medium BTU gas will have an operating pressure of 300-400 psig as it exits Plant 9.

20.2 Plant Description

Fuel Gas System

There are two fuel gas systems in order to segregate high and medium BTU gases.

Medium BTU Gas

The source of the medium BTU gas is:

- Desulfurized raw syngas from Gasification and Purification (Plant 9)

Medium BTU gas must be burned within the facility as there is no other use for it in the present concept. It is supplied to the power plant (Plant 31) to produce steam and power. Natural gas may be injected into this stream to satisfy the needs of the gas turbines in the power plant.

High BTU Gas

High BTU gas comes from the following sources:

- Outside purchased gas (Natural Gas)
- Desulfurized deethanizer overhead gas from the Gas Plant (Plant 3)

Outside pipeline gas is purchased to supplement the internally produced gas or for start-up use. The deethanizer overhead gas is burned within the facility. Natural gas can be burned within the facility as needed to balance fuel usage. The high BTU gas distribution system is designed to accommodate all of these requirements.

All of the streams first pass into a mixing drum to smooth out variations in calorific value that would result from fluctuations in flow rate of any of the gases. High BTU gas is to be piped to all in-plant users, with the piping designed so that all users operate entirely on high BTU gas.

Fuel Gas Blending

Two 10' x 5' vertical drums (21-C101 and 102) are provided for mixing natural gas with the medium and high BTU gases, respectively.

Interconnecting Piping

Interconnecting piping consists of all process lines connecting the plants, the utility headers, and the branches to each plant.

21. PLANT 25

21. Plant 25 (Catalyst and Chemical Handling)

21.1 Design Basis, Criteria and Considerations

This plant provides storage and handling for catalysts and chemicals used in all the plants. Additionally, it provides a consolidated location for tracking catalyst and chemical start-up and daily consumption requirements.

Plants requiring chemicals or catalysts include 2 (Coal Liquefaction), 3 (Gas Plant Separation), 4 (Naphtha Hydrotreater), 5 (Gas Oil Hydrotreater), 6 (Hydrogen Purification), 8 (Rose Solvent Recovery), 9 (Hydrogen Production via Coal Gasification), 11 (By-Product Sulfur Recovery), 32 (Raw, Cooling, and Service Water), 38 (Ammonia Removal), and 39 (Phenol Removal).

The equipment for this plant includes an enclosed warehouse for storing chemicals and catalysts and forklifts for transporting pallets of chemicals or catalysts into or out of the warehouse.

A warehouse is required to collect all chemicals into one area for distribution to the various plants as needed. Additionally, the warehouse is used as a temporary storage for spent catalyst that must be returned to the catalyst vendor for regeneration at the vendor's facilities.

This plant identifies all major plant catalyst and chemical requirements for startup and continuous operation.

21.2 Plant Description

A 6000 square foot chemical and catalyst warehouse (25-R101) is provided for temporary storage of chemicals. Electric forklifts (25-T101A and B) are provided for transporting pallets of chemicals or catalysts into or out of the warehouse.

21.3 Major Equipment List

Equipment No.	Type	Description
25-R101	Chemical & Catalyst Warehouse	100 ft. x 60 ft.
25-T101A,B	Forklift	Electric Motor, 25 hp

21.4 Utility Summary

Electricity = 50 kW

21.5 Chemical and Catalyst Summary

Plant 25 provides storage and handling for chemicals and catalysts used in all the plants. Table 21.1 below summarizes the start-up and consumption rates for the various chemicals or catalysts.

TABLE 21.1

Chemicals and Catalysts

Chemical or Catalyst	For Plant No.	Quantity Required for Start-up	Consumption
Critrion 324	2	733,500 lb	53,790 lbs/day
Molyvan L	2	17,930 lb	3,590 lbs/day
Iron Oxide	2	1,679,900 lb	335,988 lbs/day
DMDS (Sulfiding Agent)	2	987,000 lb	197,390 lbs/day
Caustic (NaOH)	3	115 bbl (10% wt)	20 lbs/day
Catalyst	4	46,000 lb	3 year life
Catalyst	5	458,000 lb	3 year life
MEA	6	1,200 bbl	30 gal/day
Rose Solvent	8	10,000 bbl	300 gal/day
BASF K8-11 or Haldor Topsoe SSK Catalyst	9	19,000 ft^3	3 year life
2" SS Pall Ring Packing	9	3,400 ft^3	3 year life
2" CS Pall Ring Packing	9	4,300 ft^3	3 year life
Methanol	9	2,500 bbl	200 gal/day
Claus Catalyst Kaiser S-201	11	3,000 ft^3	5 year life
SCOT Catalyst	11	1,000 ft^3	5 year life
2" SS Pall Ring Packing	11	400 ft^3	3 year life
MDEA	11	500 bbl	150 gal/day
30% Ammonia	31	6,600 lbs	890 lb/day
Sodium Sulfite	31	1,900 lbs	230 lb/day
Polymer & Chelant	31	950 lbs	140 lb/day
Disodium Phosphate	31	950 lbs	140 lb/day

Tabl 21.1 - continu d

Chemical or Catalyst	For Plant No.	Quantity Required for Start-up	Consumption
Alum	32	35,000 lbs	5,460 lb/day
Polymer	32	2,300 lbs	180 lb/day
98% H_2SO_4	32	17,500 gals	18,300 lb/day
50% NaOH	32	35,000 gals	45,200 lb/day
Polymeric Dispersion Nonionic Surfactant	32	8,200 lbs	1,890 lb/day
Phosphoric Acid as 100% H_3PO_4	38	9,600 lb	2,940 lb/day
Dephenolization Solvent	39	6,730 lb	150 lb/day

22. PLANT 35

22. Plant 35 (Instrum nt and Plant Air Facilities)

22.1 Design Basis, Criteria and Considerations

The facilities include all equipment necessary to supply instrument and utility air to the process plants and support facilities. Distribution piping is included in Plant 21 (Interconnecting Piping)

Instrument and utility air is dry, oil-free and dirt-free at the following design conditions:

- Pressure 100 psig
- Temperature 100°F
- Dew Point -40°F
- Ambient air summer dry bulb temperature, 95°F
- Ambient air summer wet bulb temperature, 89°F
- Ambient air winter temperature, -6°F
- Ambient air extreme temperatures, -18°F and 104°F

The system consists of three packaged air compressors,two operating and one spare, to supply the requirement of 15,000 inlet scfm. Auxiliary equipment such as filters, knockout drums, air dryer packages, filters and air coolers are included.

22.2 Plant Description

Air Compressor Unit

The compressors supply 7,500 scfm each, at 125 psig discharge pressure. The three compressor packages include the following:

- Interstage coolers
- After-coolers to keep the air in the range of 100°F, (design temperature)
- Interconnecting piping between the stages

Knockout Drum

Condensed residual moisture for all three compressors is removed by one knockout drum. The knockout drum is designed for 155 psig at 300°F.

Air Dryer Package

Two air dryer packages are provided. One package is a complete spare. Each package provides for the design flow of 15,000 inlet scfm and for 150 psig. A filter, included in the air dryer package, guards against dessicant breakthrough.

Distribution System

Individual plant and main air distribution headers providing instrument and utility air are included in Interconnecting Piping (Plant 21).

Controls

The air compressor system and air dryer package are fully automatic with the following control features:

- Surge control with excess air vented to the atmosphere
- Dewpoint control by moisture analyzer and instrumentation to energize the regeneration process for the desiccant bed
- Automatic startup of the standby unit in case of low pressure in the header

N ise

Noise emissions by the air compressor is in accordance with OSHA standards

22.3 Major Equipment List

Item Number	Item Description
35	Instrument Air and Plant Air System
35-C101A	Air Knockout Drum
35-C101B	Air Knockout Drum
35-K101A	Plant Air Compressor Package
35-K101B	Plant Air Compressor Package
35-K101C	Plant Air Compressor Package
35-V101A	Air Dryer Package
35-V101B	Air Dryer Package

22.4 Utility Summary

Electricity, kW = 2900

23. OPTION 6

23. Option 6 (Steam Reforming of Natural Gas Plus FBC Unit for Hydrog n Production)

23.1 Design Basis, Criteria and Considerations

In this option, as discussed earlier, the method of hydrogen production is changed from coal gasification (plant 9) to steam methane reforming (plant 9-01).

The following assumptions/design basis were utilized to develop this option:

Ash concentrate from plant 8 (Kerr McGee's ROSE-SR plant) is sent to a Fluidized Bed Combustion (FBC) plant to generate high pressure steam.

The steam reformer produces 99.9% pure hydrogen for the complex. A total of three 160 MMSCFD hydrogen trains are required. The reformer was developed as a licensed process with limited information supplied by KTI.

Besides the directly affected plant, (Plant 9) which is replaced with a natural gas/steam reformer plant (Plant 9-01) as described above, in this option there is an additional FBC plant introduced (in Plant 31.4-01) for processing of the Rose-SR bottoms. Indirectly affected plants are plant 1 (Coal Liquefaction Plant), plant 11 (By-Product Sulfur Recovery Plant), plant 31 (Steam and Power Generation Plant), plant 34 (Sewage and Effluent Water Treatment Plant), plant 38 (Ammonia Recovery Plant), and plant 39 (Phenol Recovery Plant).

23.2 Process Description and Process Flow Diagram for the Directly Affected Plant (Plant 9-01)

Reformer

Natural gas at 50 psig and 100°F is compressed in the natural gas feed compressors to 350 psig. The high pressure gas is combined with 350 psig steam produced with the unit or 600 psig steam, which has been let down to 350 psig, and reformed in a reformer furnace.

The waste heat in the flue gases from the reforming furnace is recovered in a series of heat exchangers, with the flue gases exiting through a stack at about 250°F.

Part of the heat in the reformer product is recovered as 600 psig steam in the waste heat boiler. The reformer product gas is further cooled in the product cooler and combined with steam before entering the shift reactors to provide sufficient steam for shift reaction to occur. The gas and steam mixture pass through beds of high and low temperature shift reactors in series to convert the carbon monoxide to carbon dioxide and hydrogen.

The product from the shift converters is further cooled and sent to Pressure Swing Absorption (PSA) for hydrogen purification. The PSA plants separate the hydrogen from carbon dioxide and other unconverted gas, which are used as fuel. This plant is capable of producing a 99.9% purity hydrogen. The process flow sketch for the Reformer is shown in Figure 23.1.

Fluidized Bed Combustor

As shown in the process flow sketch (Figure 23.2), the fluidized bed combustor boiler feed system conveys ash concentrate from live storage to the boiler feed silos. From these silos the ash concentrate is fed to the fluidized bed combustors.

The fluidized bed combustors are designed to burn 3,560 tons/day of ash concentrate from ROSE-SR plant and to produce steam for power generation. Three identical circulating fluidized bed boilers are provided to supply steam to the turbines. Each boiler is a drum and reheat type, with a balanced draft furnace.

A limestone preparation system is provided to dry and prepare limestone to proper size as required by the boiler manufacturer. Prepared limestone is conveyed pneumatically and fed to the combustor boiler furnace. The limestone injection is used to control sulfur dioxide emissions. The bottom ash is removed from the bottom of the combustor and sent to a silo for truck unloading.

Flue gas exiting from the boilers flows to the cyclones where large size solid particles are removed and recycled back to the furnace. The flue gas from the cyclones flows through the air heater where the primary and secondary air are preheated before flowing to the furnace. The gas leaves the air heater and enters a baghouse. The baghouse is provided for controlling particulate emissions from the boiler.

The flue gas leaves the baghouse and is directed by an induced draft fan to the stack. Fly ash is collected and withdrawn from the baghouse and is sent to a fly ash silo for truck loading.

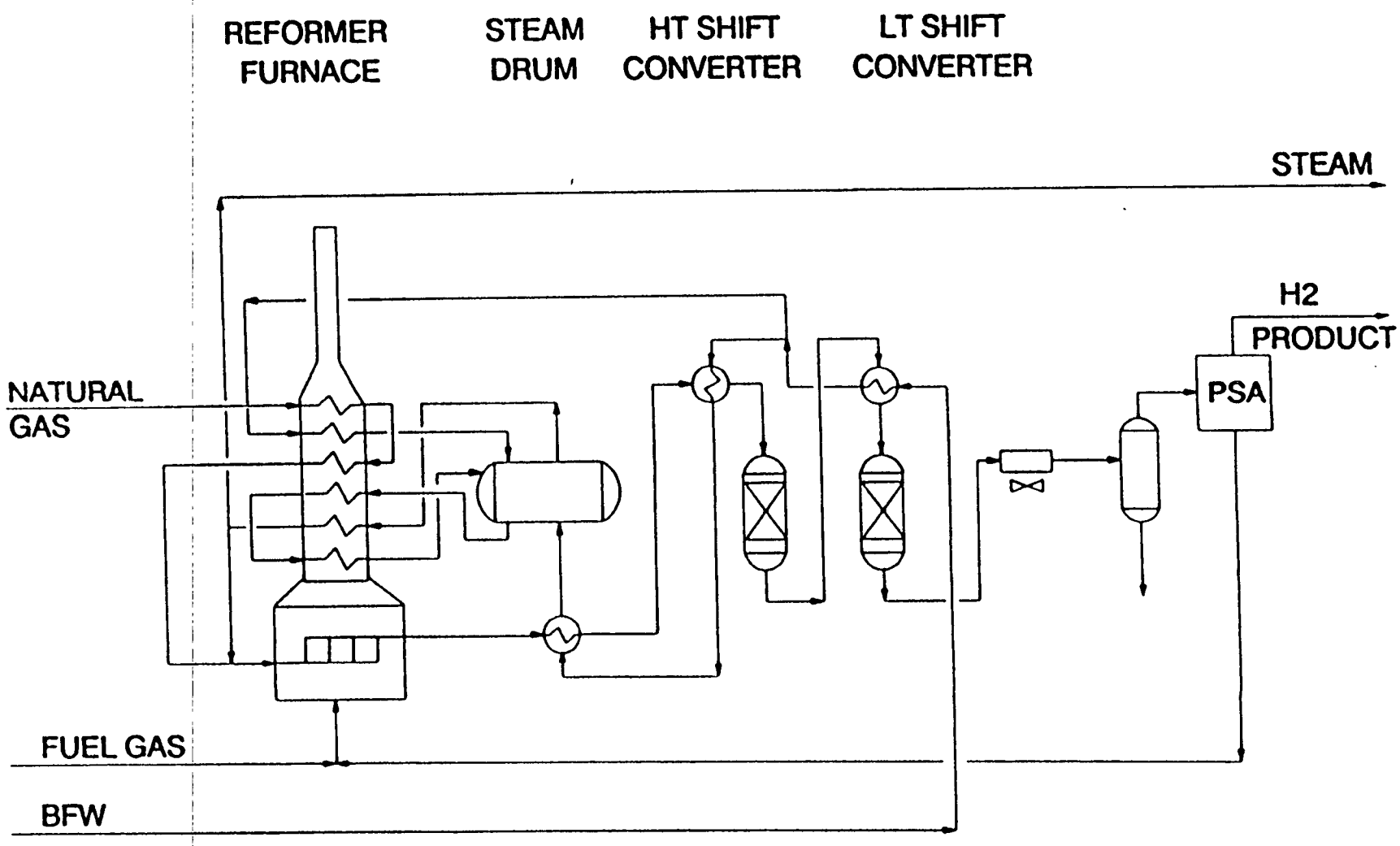

FIGURE 23.1 Plant 9-01

PROCESS FLOW DIAGRAM OF STEAM REFORMER FOR NATURAL GAS

Steam Turbine Generator

The steam turbine generator is shown schematically in Figure 23.3. As shown in this figure, high pressure steam from the fluidized bed combustor (2620 psig) is sent to the high pressure (HP) turbine. The turbine exhaust passes through a desuperheater before entering the intermediate pressure (IP) turbine. High pressure steam let down to 600 psig also passes through a desuperheater before entering the IP turbine. The exhaust from the IP turbine is split and sent to two low pressure (LP) turbines operating in parallel. Each of the LP turbines has a surface condenser on its exhaust. The condenser operates under vacuum (1.0 psia). The condensate is recovered and returned to the deaerators at the boiler feedwater treating area.

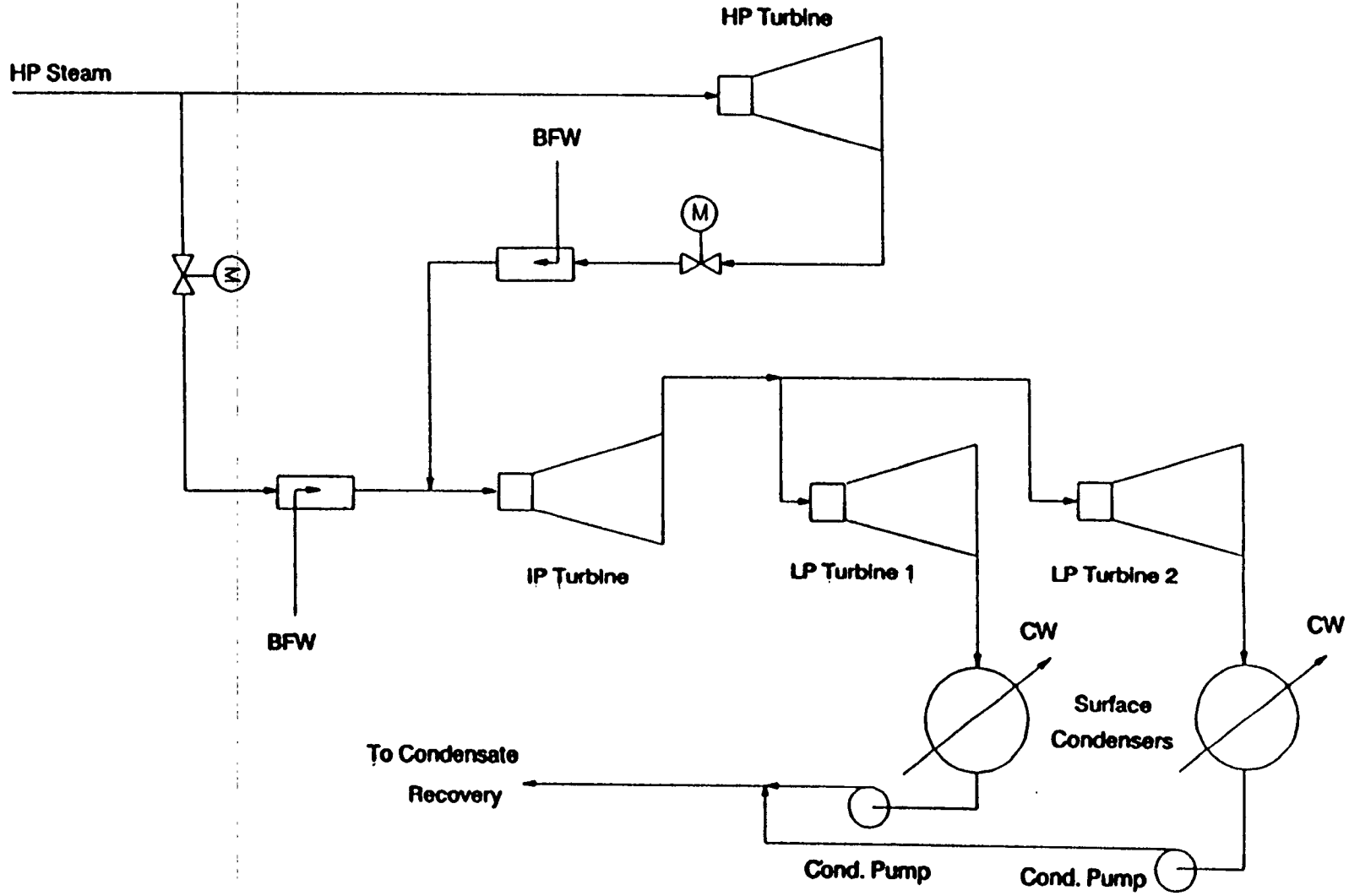

FIGURE 23.3 PROCESS FLOW DIAGRAM OF STEAM TURBINE GENERATOR

PLANT 31.1-01

23.3 Mat rial Balance

The overall material balance for various ISBL plants for option 6 are shown in Tables 23.1 through 23.12.

D.O.E. COAL LIQUEFACTION
BASELINE DESIGN AND SYSTEM ANALYSIS
CONTRACT NO. DE-AC22 90PC89857
PROJECT REVIEW MEETING
OCTOBER 19, 1993
PITTSBURGH, PA

OVERALL MATERIAL BALANCE FOR VARIOUS ISBL PLANTS FOR OPTION 6

Table 23.1 Plant 1 Mat rial Balanc

PLANT 1 : INPUT (Option 6)

Components (Lb/Hr)	ROM Coal PL-1 Feed			Total Input	ROM Coal (wt%-Wet)	ROM Coal (wt%-MF)
H2O	552,605			552,605	27.00%	
Coal	1,399,952			1,399,952	68.40%	93.70%
Ash	94,128			94,128	4.60%	6.30%
Total, PPH	2,046,685			2,046,685	100%	100%
Total, TPD	24,560			24,560		
Total, TPD (MF)	17,929			17,929		

PLANT 1 : OUTPUT

Components (Lb/Hr)	ROM Coal to PL-9	Coal to PL-1.4	Moisture Loss	Total Output	PL-1.4 Feed (wt%-Wet)	PL-1.4 Feed (wt%-MF)
H2O	0	221,042	331,563	552,605	12.89%	
Coal	0	1,399,952		1,399,952	81.62%	93.70%
Ash	0	94,128		94,128	5.49%	6.30%
Total, PPH	0	1,715,122	331,563	2,046,685	100%	100%
Total, TPD	0	20,581	3,979	24,560		
Total, TPD (MF)	0	17,929	------	17,929		

PLANT 1.4 : INPUT

Components (Lb/Hr)	Feed from PL-1			Total Input	From PL-1 (wt%-Wet)	From PL-1 (wt%-MF)
H2O	221,042			221,042	12.89%	
Coal	1,399,952			1,399,952	81.62%	93.70%
Ash	94,128			94,128	5.49%	6.30%
Total, PPH	1,715,122			1,715,122	100%	100%
Total, TPD	20,581			20,581		
Total, TPD (MF)	17,929			17,929		

PLANT 1.4 : OUTPUT

Components (Lb/Hr)	Dry Coal to PL-2	Moisture Loss		Total Output	PL-2 Feed (wt%-Wet)	PL-2 Feed (wt%-MF)
H2O	30,492	190,550		221,042	2.00%	
Coal	1,399,952			1,399,952	91.83%	93.70%
Ash	94,128			94,128	6.17%	6.30%
Total, PPH	1,524,572	190,550		1,715,122	100%	100%
Total, TPD	18,295	2,287		20,581		
Total, TPD (MF)	17,929	------		17,929		

Tabl 23.2 Plant 2 Mat rial Balance

PLANT 2 : INPUT Option 6

Stream No.	2.2	2.3	2.4	2.6	2.5	2.1			
Components (Lb/Hr)	Coal	PL-9 H2 MakeUP	PL6 H2 Recycle	Wash Water	Steam	ROSE Extract	Cracked HC's	Reactor Delta	Total Input
H2O	7,623		254	156,250	67,790			54,343	231,917
H2S								735	
NH3								2,591	
CO								6,650	
CO2								15,469	
H2		20,300	8,759					(20,300)	29,059
N2			132						132
C1		1,640	3,240					9,380	4,880
C2			1,836				118	6,581	1,954
C3			1,450				57	6,965	1,507
C4			546				76	3,922	622
C5-350			250					34,650	250
350-450								25,865	
450-650						5		77,628	5
650-850						752	806	71,923	1,558
850-1000						1,349	(254)	1,911	1,095
1000+						53,613	(803)	25,133	52,810
Phenols								957	
Coal (MAF)	349,988							(324,403)	349,988
Ash	23,532								23,532
Total	381,143	21,940	16,467	156,250	67,790	55,719	0	0	699,309
Temp,F	400	100	130	120	650	400	-----	-----	-----
Pres,Psig	3,100	3,235	-----	2,960	-----	3,100	-----	-----	-----
Gas MW	-----	2.16	3.5	-----	-----	-----	-----		-----

PLANT 2 : OUTPUT

Stream No.	2.7	2.8	2.9	2.10	2.11	2.12			
Components (Lb/Hr)	HP Gas to PL-6	LP Gas to PL-6	Naphtha to PL-3	Gas Oil to PL-5	ROSE Feed	Sour Water	Recycle Water		Total Output
H2O	47	1,763	11	75	1	215,702	68,661		286,260
H2S	274	184	4			273			735
NH3		30	6			2,555			2,591
CO	5,403	1,247							6,650
CO2	6,220	2,751	22			6,476			15,469
H2	6,995	1,764							8,759
N2	108	24							132
C1	10,509	3,744	2			5			14,260
C2	5,135	3,255	142			3			8,535
C3	4,042	4,204	226						8,472
C4	1,497	2,593	454						4,544
C5-350	1,730	7,078	25,226	866					34,900
350-450	23	95	440	25,307					25,865
450-650	1	1	7	77,621	3				77,633
650-850				72,728	753				73,481
850-1000				1,025	1,981				3,006
1000+					77,943				77,943
Phenols						957			957
Coal(uncon)					25,585				25,585
Ash					23,532				23,532
Total	41,984	28,733	26,540	177,622	129,798	225,971	68,661		699,309
Temp,F	120	150	130	130	400	87	222		-----
Pres,Psig	2,950	45	50	100	90	50	50		-----
Gas MW	8.8	17.4	-----	-----	-----	-----	-----		-----

Figur 23.4

LOW RANK COAL MATERIAL BALANCE PER TRAIN
HYDROGEN BY NATURAL GAS REFORMING OPTION

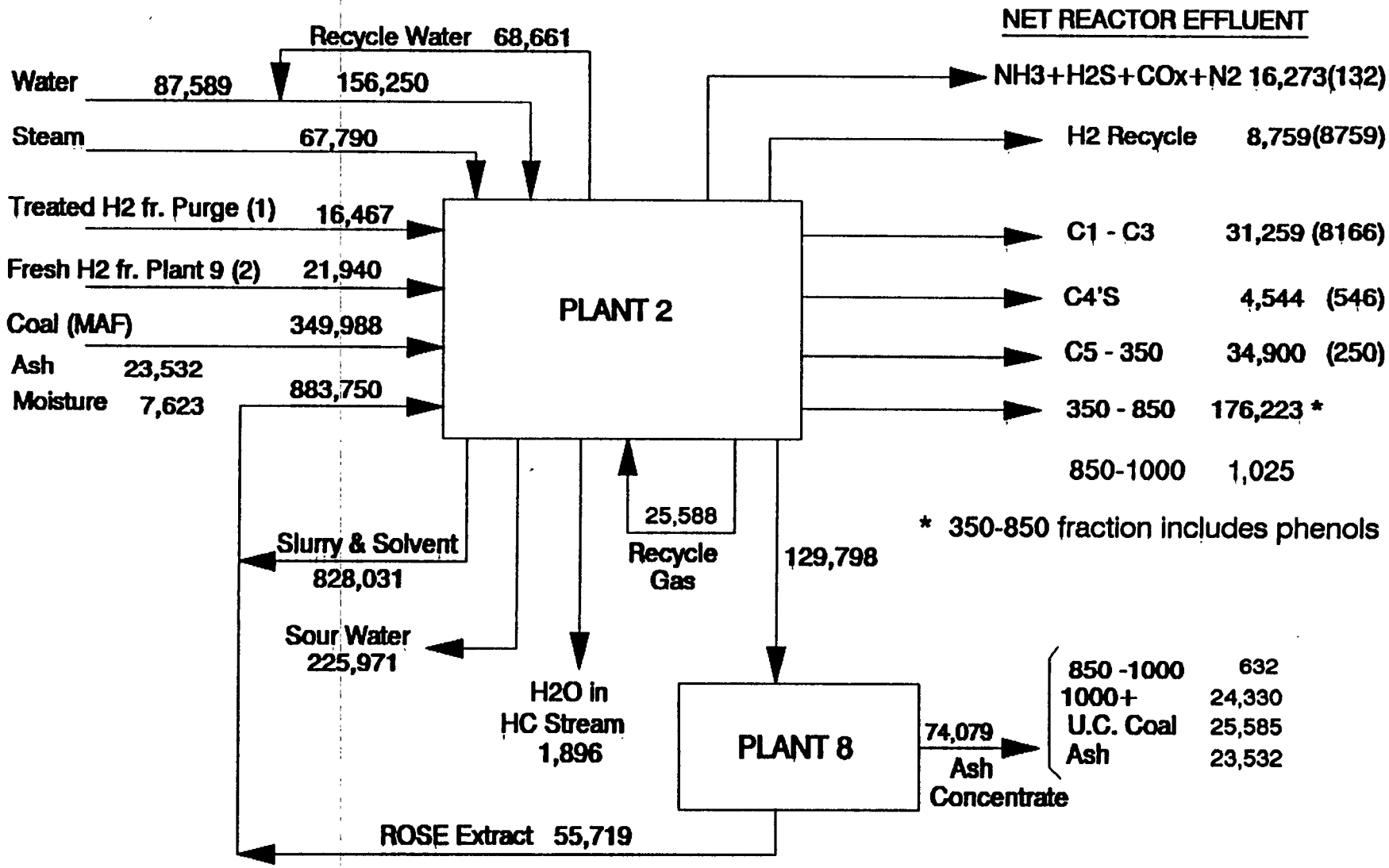

NOTES: . Flow rate in lbs/hr
. Number in parenthesis is due to input streams (1) & (2). Therefor , to calculate th % yield subtract out th corresponding number in parenthesis.
. Th HC's in sour water are shown in net reactor effluent.

LRCNGMB.DRW 10/93

Tabl 23.3 Plant 3 Mat rial Balance

PLANT 3 : INPUT Option 6

Stream No.	3.1	3.2					
Components (Lb/Hr)	PL-2 Naphtha	PL-6 TailGas					Total Input
H2O	44	1,176					1,220
H2S	16	1					17
NH3	24						24
CO							
CO2	88						88
H2		2,746					2,746
N2							
C1	8	47,658					47,666
C2	568	29,027					29,595
C3	904	30,641					31,545
C4	1,816	18,894					20,710
C5-350	100,904	37,145					138,049
350-450	1,760	19					1,779
450-650	28	3					31
650-850							
850-1000							
1000+							
MEA		20					20
Coal (MAF)							
Ash							
Total	106,160	167,330					273,490
Temp,F	130	100					----
Pres,Psig	50	220					----
Gas MW	----	25.3					----

PLANT 3 : OUTPUT

Stream No.	3.3	3.4	3.11	3.12	3.5	3.6	
Components (Lb/Hr)	LP Gas to PL-6	High BTU Fuel Gas	C3 Prod	C4 Prod	Naphtha to PL-4	Sour Water	Total Output
H2O	42	290	5			883	1,220
H2S	17						17
NH3	24						24
CO							
CO2	88						88
H2		2,746					2,746
N2							
C1	9	47,657					47,666
C2	568	28,517	510				29,595
C3	903	30	30,332	280			31,545
C4	1,784	62	561	18,180	123		20,710
C5-350	1,879			355	135,815		138,049
350-450					1,779		1,779
450-650					31		31
650-850							
850-1000							
1000+							
MEA		20					20
Coal(uncon)							
Ash							
Total	5,314	79,322	31,408	18,815	137,748	883	273,490
Temp,F	130	100	120	100	130	130	----
Pres,Psig	45	200	265	265	220	40	----
Gas MW	51.9	15.0	----	----	----	----	----

Tabl 23.4 Plant 4 Material Balance

PLANT 4 : INPUT Option 6

Str am No.	Stream No.	4.8	4.9	4.7	4.3	4.4		
Components (Lb/Hr)	Components (Lb/Hr)	PL-3 Naphtha	PL-6 KO Liq	PL-5 Naphtha	PL-9 H2	Wash Water	Reactor Delta	Total Input
H2O	H2O		268	5		8,200	4,913	8,473
H2S	H2S			1			136	1
NH3	NH3			8			347	8
CO	CO							
CO2	CO2							
H2	H2				1,204		(276)	1,204
N2	N2							
C1	C1				97		600	97
C2	C2		8	11			398	19
C3	C3		50	91			346	141
C4	C4	123	73	246			1,394	442
C5-350	C5-350	135,815	2,331	11,470			(25,458)	149,616
350-450	350-450	1,779	276	166			17,535	2,221
450-650	450-650	31					62	31
650-850	650-850						3	
850-1000	850-1000							
1000+	1000+							
Coal (MAF)	Coal (MAF)							
Ash	Ash							
Total	Total	137,748	3,006	11,998	1,301	8,200	0	162,253
Temp,F	Temp,F	130	-----	135	130	120	-----	-----
Pres,Psig	Pres,Psig	220	-----	-----	-----	950	-----	-----
Gas MW	Gas MW	-----	-----	-----	2.16	-----	-----	-----

PLANT 4 : OUTPUT

Stream No.	Stream No.	4.1 +4.2	4.6	4.5			
Components (Lb/Hr)	Components (Lb/Hr)	LP Gas to PL-6	Naphtha Product	Sour Water			Total Output
H2O	H2O	50		13,336			13,386
H2S	H2S			137			137
NH3	NH3			355			355
CO	CO						
CO2	CO2						
H2	H2	928					928
N2	N2						
C1	C1	697					697
C2	C2	417					417
C3	C3	487					487
C4	C4	1,656	180				1,836
C5-350	C5-350	777	123,381				124,158
350-450	350-450	3	19,753				19,756
450-650	450-650		93				93
650-850	650-850		3				3
850-1000	850-1000						
1000+	1000+						
Coal (uncon)	Coal (uncon)						
Ash	Ash						
Total	Total	5,015	143,410	13,828			162,253
Temp,F	Temp,F	137	100	-----			-----

Tabl 23.5 Plant 5 Mat rial Balanc

PLANT 5 : INPUT Option 6

Stream No.	5.1	5.2A	5.2B	5.4	5.3				
Components (Lb/Hr)	PL-2 Gas Oil	PL-6 H2	PL-9 H2	Steam	Wash Water			Reactor Delta	Total Input
H2O	300			5,000	47,100			17,216	52,400
H2S								185	
NH3								2,850	
CO									
CO2									
H2		410	15,869					(14,029)	16,279
N2									
C1		42	1,282					1,644	1,324
C2								1,914	
C3								2,282	
C4								1,637	
C5-350	3,464							11,258	3,464
350-450	101,228							(9,857)	101,228
450-650	310,484							123,475	310,484
650-850	290,912							(135,141)	290,912
850-1000	4,100							(3,434)	4,100
1000+									
Coal (MAF)									
Ash									
Total (PPH)	710,488	452	17,151	5,000	47,100			0	780,191
Temp,F	130	100	100	650	120			----	----
Press,Psig	100	1,530	2,700	50	2,500			----	----
Gas MW	----	2.19	2.16	----	----			----	----

PLANT 5 : OUTPUT

Stream No.	5.6		5.10	5.11	5.12	5.13	5.5		
Components (Lb/Hr)	HP Gas to PL-6	LP Gas to PL-6	Naphtha to PL-4	Light Distill	Heavy Distill	Gas Oil Product	Sour Water	Water Recycle	Total Output
H2O	9	824	5		235		63,433	5,110	69,616
H2S		32	1				152		185
NH3	5	611	8				2,226		2,850
CO									
CO2									
H2	379	1,871							2,250
N2									
C1	357	2,611							2,968
C2	114	1,789	11						1,914
C3	93	2,098	91						2,282
C4	43	1,348	246						1,637
C5-350	58	2,547	11,421	324	372	0			14,722
350-450	4	108	163	71,769	19,322	5			91,371
450-650				9,577	288,408	135,974			433,959
650-850					7,261	148,510			155,771
850-1000					3	663			666
1000+									
Coal (MAF)									
Ash									
Total (PPH)	1,062	13,839	11,946	81,670	315,601	285,152	65,811	5,110	780,191
Temp,F	169	135	135	100	135	135	168	168	----
Press,Psig	2,450	10	----	10	50	40	10	10	----
Gas MW	4.5	10.0	----	----	----	----	----	----	----

Tabl 23.6 Plant 6 Material Balance

PLANT 6 : INPUT Option 6

Stream No.	6.3	6.4	6.2 +6.13	6.9	6.10	6.11	6.12	6.34	
Components (Lb/Hr)	PL-2 HP Gas	PL-5 HP Gas	Wash Water	PL-2 LP Gas	PL-3 LP Gas	PL-4 LP Gas	PL-5 LP Gas	Makeup Amine	Total Input
H2O	188	9	42,000	7,052	42	50	824	768	50,933
H2S	1,096			736	17		32		1,881
NH3		5		120	24		611		760
CO	21,612			4,988					26,600
CO2	24,880			11,004	88				35,972
H2	27,980	379		7,056		928	1,871		38,214
N2	432			96					528
C1	42,036	357		14,976	9	697	2,611		60,686
C2	20,540	114		13,020	568	417	1,789		36,448
C3	16,168	93		16,816	903	487	2,098		36,565
C4	5,988	43		10,372	1,784	1,656	1,348		21,191
C5-350	6,920	58		28,312	1,879	777	2,558		40,504
350-450	92	4		380		3	110		589
450-650	4			4					8
650-850									
850-1000									
MEA								20	20
Coal (MAF)									
Ash									
Total	167,936	1,062	42,000	114,932	5,314	5,015	13,852	788	350,899
Temp,F	120	169	100	150	130	130	135	80	-----
Pres,Psig	2,950	2,450	-----	45	45	-----	10	25	-----
Gas MW	8.8	4.5	-----	17.4	51.9	8.8	10.0	-----	-----

PLANT 6 : OUTPUT

Stream No.	6.8 +6.16	6.7A +6.7B	6.6	6.17 +6.30	6.15	6.33A +6.33B			
Components (Lb/Hr)	Sour Water	H2 to PL-5	H2 to PL-2	KO Liq to PL-4	PSA TG to PL-3	Total AcidGas			Total Output
H2O	47,691		1,016	268	1,176	782			50,933
H2S	86				1	1,794			1,881
NH3	760								760
CO						26,600			26,600
CO2	1,680					34,292			35,972
H2		410	35,036		2,746	22			38,214
N2			528						528
C1	2	42	12,960		47,658	24			60,686
C2	1		7,344	8	29,027	68			36,448
C3	2		5,800	50	30,641	72			36,565
C4	1		2,184	73	18,894	39			21,191
C5-350	4		1,000	2,331	37,145	24			40,504
350-450	263			276	19	31			589
450-650	5				3				8
650-850									
850-1000									
MEA					20				20
Coal(uncon)									
Ash									
Total	50,495	452	65,868	3,006	167,330	63,748			350,899
Temp,F	120	100	130	-----	100	87			-----
Pres,Psig	240	1,530	-----	-----	220	50			-----
Gas MW	-----	2.2	3.5	-----	25.3	34.6			-----

Tabl 23.7 Plant 8 Mat rial Balanc

PLANT 8 : INPUT Option 6

Components (Lb/Hr)	8.1 PL-2 Feed			Total Input
H2O				
850-	3,028			3,028
850-1000	7,924			7,924
1000+	311,772			311,772
Coal (Unconv)	102,340			102,340
Ash	94,128			94,128
Total, PPH	519,192			519,192
Total, TPD	6,230			6,230

PLANT 8 : OUTPUT

Components (Lb/Hr)	8.2 Extract to PL-2	8.3 Ash Concentrate to PL-9		Total Output
H2O				
850-	3028			3,028
850-1000	5396	2528		7,924
1000+	214452	97320		311,772
Coal (Unconv)		102340		102,340
Ash		94,128		94,128
Total, PPH	222,876	296,316		519,192
Total, TPD	2,675	3,556		6,230

Tabl 23.8 Plant 9 Mat rial Balance

PLANT 9.01 : INPUT Option 6

Stream No.	9.1	9.2			
Components (Lb/Hr)	Natural Gas	Steam		Reaction Delta	Total Input
H2O		930,916		(490,568)	930,916
H2S					
NH3					
CO				25,577	
CO2				579,490	
H2				110,841	
N2					
O2					
C1	330,993			(225,340)	330,993
Total, PPH	330,993	930,916		0	1,261,909
Gas-MMSCFD	188	------			------
Gas-MW	16.04	------			------

PLANT 9.01 : OUTPUT

Stream No.	9.3	9.4	9.5		
Components (Lb/Hr)	Hydrogen Product	Med BTU Off Gas	Sour Water		Total Output
H2O		32,997	407,351		440,348
H2S					
NH3					
CO		25,577			25,577
CO2		579,490			579,490
H2	98,273	12,568			110,841
N2					
O2					
C1	7,939	97,714			105,653
Total, PPH	106,212	748,346	407,351		1,261,909
Liquid-GPM	------	------	831		------
Gas-MMSCFD	449	257	------		------
Gas-MW	2.16	26.5	------		------

Table 23.9 Plant 11 Mat rial Balanc

PLANT 11 : INPUT Option 6

Components (Lb/Hr)	PL-6 Acid Gas	PL-38 Acid Gas	Air	Reaction Delta	Total Input
H2O	782	4,198	646	2,935	5,626
H2S	1,794	1,461		(3,224)	3,255
COS					
NH3		7			7
CO	26,600			(23,940)	26,600
CO2	34,292	27,531		40,214	61,823
H2	22			(22)	22
N2			59,437		59,437
O2			18,056	(18,119)	18,056
C1	24	21		(45)	45
C5-350	203	273		(476)	476
350+	31			(31)	31
Phenols		325		(325)	325
Sulfur				3,042	
Total, PPH	63,748	33,816	78,139	9	175,703
Gas, MMSCFD	17	8	25	———	———
Gas, MW	34.6	37.2	28.7	———	———

PLANT 11 : OUTPUT

Components (Lb/Hr)	Sulfur Product	Gas to Incinerator	Sour Water to PL-38		Total Output
H2O		608	7,882		8,490
H2S		31			31
COS					0
NH3		7			7
CO		2,660			2,660
CO2		102,036			102,036
H2					
N2		59,437			59,437
O2					
C1					
C5-350					
350+					
Phenols					
Sulfur	3,042				3,042
Total, PPH	3,042	164,779	7,882		175,703
Gas, MMSCFD	———	42	———		———
Liquid, GPM	———	———	16		———
Solids, TPD	37	———	———		———
Gas, MW	———	36.0	———		———

Table 23.10 Plant 31 Material Balance

PLANT 31.1 & 31.4 : INPUT (Option 6)

Components (Lb/Hr)	PL-8 Ash Conc	Lime Stone	Air	Reaction Delta	Total Input
H2O				103,740	
CO2				643,383	
N2			2,726,278	1,926	2,726,278
O2			828,191	(552,128)	828,191
850-1000	2,528			(2,528)	2,528
1000+	97,320			(97,320)	97,320
Coal (Unconv)	102,340			(102,340)	102,340
Ash	94,128				94,128
CaCO3		14,631		(14,631)	14,631
CaSO4				19,898	
Total, PPH	296,316	14,631	3,554,469	0	3,865,416
Total, TPD	3,556	176	------		------
Gas- MW	------	------	28.9		------
Gas-MMSCFD	------	------	1,122		------

PLANT 31.1 & 31.4 : OUTUT

Components (Lb/Hr)	Flue Gas	Solids			Total Input
H2O	103,740				103,740
CO2	642,231	1,152			643,383
N2	2,728,204				2,728,204
O2	276,064				276,064
850-1000					
1000+					
Coal (Unconv)					
Ash		94,128			94,128
CaCO3					
CaSO4		19,898			19,898
Total, PPH	3,750,239	115,178			3,865,416
Total, TPD	------	1,382			------
Gas- MW	29.7	------			------
Gas-MMSCFD	1,151	------			------

Tabl 23.11 Plant 38 Mat rial Balanc

PLANT 38 : INPUT Option 6

Stream No.		1	2	3	4	5	6	7	8	9
Components (Lb/Hr)	PL-1/1.4 Sour Water	PL-2 Sour Water	PL-3 Sour Water	PL-4 Sour Water	PL-5 Sour Water	PL-6 Sour Water	PL-8 Sour Water	PL-9 Sour Water	PL-11 Sour Water	Total Sour Water
H2O	522,113	862,809	883	13,336	63,393	47,691	14,544	407,351	7,882	1,940,002
H2S		1,092		137	152	86				1,467
NH3 (Free)		10,220		355	2,226	760				13,561
CO2		25,904				1,680				27,584
H2										
C1		20				2				22
Organics		12				276				288
Phenolics		3,827								3,827
Total, PPH	522,113	903,884	883	13,828	65,771	50,495	14,544	407,351	7,882	1,986,751
Liquid-GPM	1,044	1,808	2	28	132	101	29	815	16	3,974

PLANT 38 : OUTPUT

Stream No.	10		11B	12						
Components (Lb/Hr)	Acid Gas to PL-11		Water to PL-39	NH3 Product						Total Output
H2O	4,198		1,935,745	59						1,940,002
H2S	1,461		6							1,467
NH3 (Free)	7		116	13,438						13,561
CO2	27,531		53							27,584
H2										
C1	21		1							22
Organics	273		15							288
Phenolics	325		3,502							3,827
Total, PPH	33,816		1,939,438	13,497						1,986,751
Liquid-GPM	———		3,958	———						3,958
Solids-TPD	———		———	162						162
Gas-MMSCFD	8		———	———						———
Gas-MW	37.2		———	———						———

Tabl 23.12 Plant 39 Material Balance

PLANT 39 : INPUT Option 6

Components (Lb/Hr)	1 PL-38 Stripped Waste Water	30 Condensate MakeUp	24 Nitrogen MakeUp	26 CO2 MakeUp	Solvent MakeUp	Total Input
H2O	1,935,745	1,343				1,937,088
H2S	6					6
NH3 (Free)	116					116
CO2	53					53
N2			314			314
C1	1					1
Organics	15					15
Phenolics	3,502					3,502
Solvent					27	27
Total, PPH	1,939,438	1,343	314	0	27	1,941,122
Liquid-GPM	3,879	3	-----	-----	-----	3,882

PLANT 39 : OUTPUT

Components (Lb/Hr)	20-1 Treated Water to PL-2	20-2 Treated Water to PL-34	3 Acid Gas to Incinerator	32 Phenol Product		Total Output
H2O	350,356	1,586,244	102	386		1,937,088
H2S		5	1			6
NH3 (Free)		116				116
CO2		53				53
N2		86	228			314
C1		1				1
Organics		14		1		15
Phenolics		109		3,393		3,502
Solvent		25		2		27
Total, PPH	350,356	1,586,653	331	3,782		1,941,122
Liquid-GPM	715	3,173	-----	-----		-----
Solids-TPD	-----	-----	-----	45		-----
Gas-MMSCFD	-----	-----	0.1	-----		-----
Gas-MW	-----	-----	23.9	-----		-----

23.4 Utility Summary for the Directly Affected Plant

The utility requirement for the directly affected plant (plant 9-01) is shown in Table 23.13.

TABLE 23.13

Low Rank Coal Plus Option 6

Utility Requirement for Plant 9-01

Steam, 600 psig saturated, lbs/hr	-1,220,800
Cooling water, gpm	10,174
Electricity, KW	6,613
Fuel Gas, MMBtu/hr	1,663

23.5 Overall Impact

The overall impact on the entire complex due to the change in hydrogen production method from coal gasification, plant 9 (in the base case design) to steam methane reforming (plant 9-01) has been quantified based on the throughput adjustments to all the indirectly affected plants. Such effects are included in this report as: overall plant configuration and overall material balance (subsection 23.5.1), overall utility summary (subsection 23.5.2), overall water flow distribution (subsection 23.5.3) and overall hydrogen flow distribution (subsection 23.5.4).

23.5.1 Overall Plant Configuration and Material Balance

The overall plant configuration and overall material balance for this option are shown in the same figure, Figure 23.5. Table 23.14 shows the overall material balance for Option 6.

23.5.2 Overall Utility Summary

The overall utility summary for this option in shown in Table 23.15.

23.5.3 Overall Water Flow Distribution

Table 23.16 shows the overall CW and Makeup Water Balance for Option 6. The overall raw water requirement for Option 6 is shown in Table 23.17. The overall water flow distribution for the entire complex is shown in Figure 23.6.

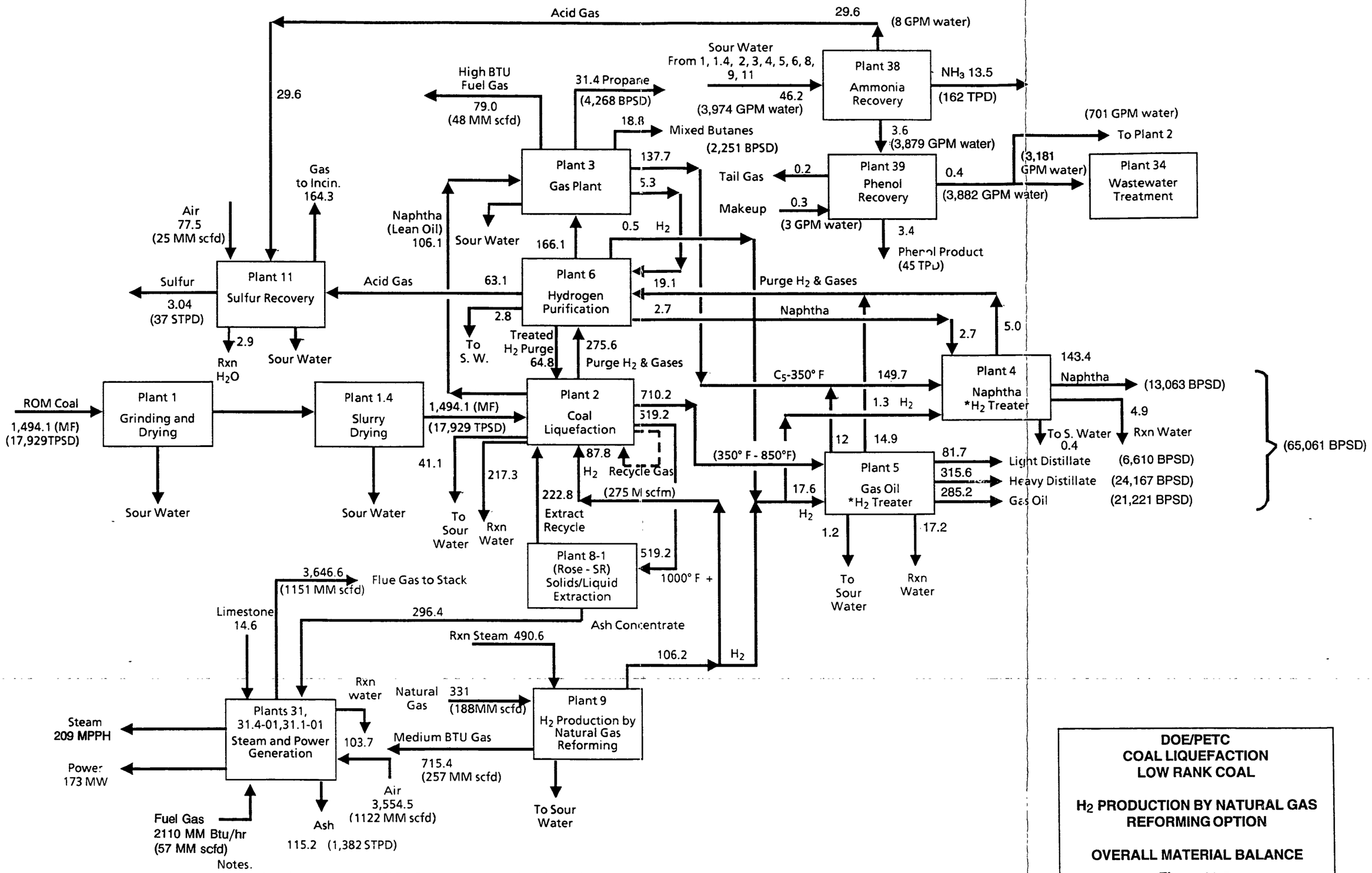

Notes.

1. Flow rates are in MLB/HR unless noted and on dry basis
2. Minor streams including steam, water, sour water, and make-up amine are not shown on this diagram
3. Flow rates around plants #38, 39, 34 are shown on wet basis

*H_2 Treater = Hydrotreater

1'93033-1

DOE/PETC
COAL LIQUEFACTION
LOW RANK COAL

H_2 PRODUCTION BY NATURAL GAS REFORMING OPTION

OVERALL MATERIAL BALANCE

Figure 23.5

Table 23.14

Overall Material Balance – Low Rank Coal Option 6

Basis : Dry

Input	MLb/H	TPSD	BPSD	MMSCFD		
Coal–(MAF)	1,400	16,800	------	------	93.70%	Coal
Coal–Ash	94	1,129	------	------	6.30%	Ash
Limestone (Pl–31.1/31.4)	15	175	------	------		
Air (Sulfur Plant)	78	------	------	25	28.8	MW
Air (PL–31.1/31.4)	3,555	------	------	1,122	28.8	MW
Natural Gas (H2 Plant)	331	------	------	188	16.0	MW
Reaction Steam (H2 Plant)	491	------	------	------		
Total	5,964					
Output	MLb/H	TPSD	BPSD	MMSCFD		
Propane	31	------	4,268	------	0.504	SG60
Butane	19	------	2,251	------	0.572	SG60
Naphtha	143	------	13,063	------	57.3	API
Light Distillate	82	------	6,610	------	35.1	API
Heavy Distillate	316	------	24,167	------	26.6	API
Gas Oil	285	------	21,221	------	22.4	API
Sulfur	3	35	------	------		
Ammonia	13	157	------	------		
Phenol	3	41	------	------		
Reaction Water (PL–2,4,5,11,31)	350	------	------	------		
Ash/Solids Refuse	115	2,004	------	------		
High BTU Fuel Gas (PL–3)	79	------	------	48	15.0	MW
Medium BTU Fuel Gas (PL–9)	715	------	------	257	26.5	MW
Gas to Incinerator (PL–11)	164	------	------	42	36.0	MW
Flue Gas (PL–31.1/31.4)	3,646	------	------	1,151	29.7	MW
Tail Gas to Atm (PL–39)	0.2	------	------	0.1	23.9	MW
Total	5,964		71,580			

Table 23.15

Overall Utility Balanc – Low Rank Coal Option 6

Jan. '94 File:6OVUB.wk1

Plant No.	Plant Name	Fuel Gas MMBtu/H	Elect Power kW	Steam 600# 720F MLb/H	Steam 600# 489F MLb/H	Steam 150# 366F MLb/H	Steam 50# 298F MLb/H	BFW/ Cond MLb/H	Cooling Water GPM	Sour Water GPM	Waste Water GPM	Makeup Water GPM	Air MSCFM	N2 MSCFM
1	Coal Grinding & Drying	384	25,011						6,429					
1.4	Slurry Drying	805	463						714					
2	Coal Liquefaction	1,667	41,080	6	(97)	(46)	(58)	473	8,829	(1,845)				1
3	Gas Plant	(1,567)	1,080		215		17	(232)	7,857	(2)				
4	Naphtha Hydrotreater	17	757		38			(38)	2,214	(21)		(17)		
5	Gas Oil Hydrotreater	292	2,712			(114)	45	74	114	(134)		(84)		
6	Hydrogen Purification		38,100				202	(202)	350	(103)		(82)		
8	Critical Solvent De-Ashing	121	2,496			15		0		(30)				
9.01	H2 by NG/Stm Reforming	1,663	6,613		(1,221)			2,152	10,174	(831)				
11	Byproduct Sulfur Recovery	67	433		35	(20)	12	(27)	6,307	(16)				
--	All Common Users			73		40	90	(193)				(550)	9	
	Sub-Total (Process)	**3,449**	**118,745**	**79**	**(1,030)**	**(125)**	**308**	**2,007**	**42,988**	**(2,982)**	**0**	**(733)**	**9**	**1**
19	Relief/Blowdown		20											
20	Tankage		6,800			22	4	(26)	100					
30	Electr Distribution													
31	Steam/Power Generation	2,110		(209)				209			(400)			
31.1	Steam Turbine Generation		(184,880)	3,238				(3,238)	106,500			(3,132)		
31.4	Fluid Bed Combustion		25,070	(3,238)				3,238			(129)	(129)		
32	Raw and Cooling Water		15,000						(223,438)		(500)	8,837		
32	Potable Water											(100)		
33	Fire Protection		44											
34	Sewage/Effluent Treatment		7,500				3	(3)				4,857		
35	Instr/Plant Air Systems		2,900										(15)	
36	Purge/Flush Oil Systems		265											
37	Solid Waste Disposal		50								100			
38	Ammonia Recovery		1,349		321	512		(833)	67,679	2,982				
39	Phenol recovery		1,123			31	85	(116)	6,171		(1,361)			
--	Bldg 41,42,Lights,etc.		4,900											
	Steam Import				(130)	(840)	(400)							
	Steam Export			130	840	400								
	Natural Gas Import	(5,559)												
	Offsite BL/Evaporation							327			2,290	(9,600)		
	Sub-Total (Offsite)	**(3,449)**	**(119,859)**	**(79)**	**1,030**	**125**	**(308)**	**(442)**	**(42,988)**	**2,982**	**0**	**733**	**(15)**	**0**
	Grand Total	**0**	**(1,114)**	**0**	**0**	**0**	**0**	**1,566**	**0**	**0**	**0**	**0**	**(7)**	**1**

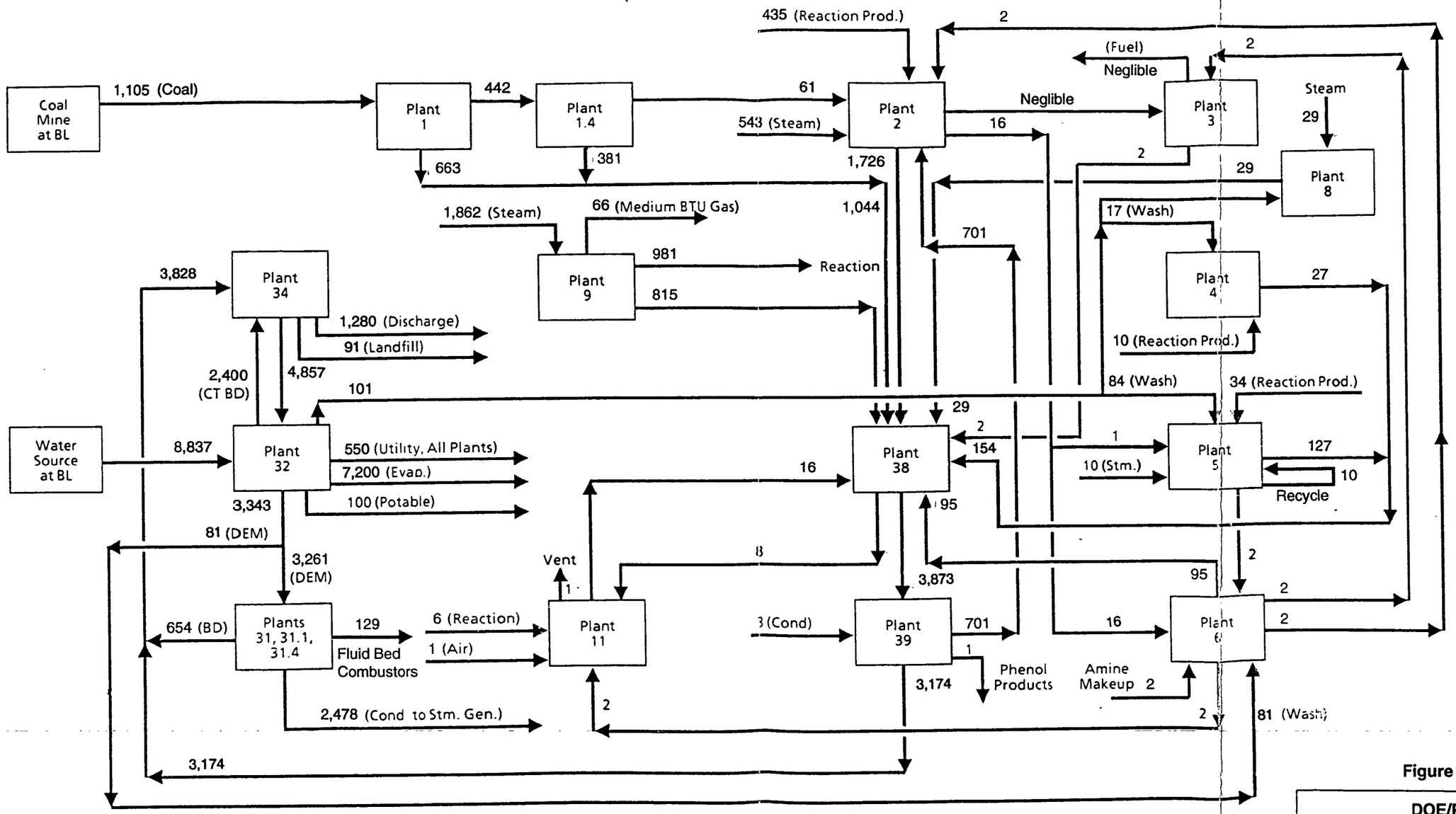

Notes:

1. Flows are for normal operation and in GPM

Figure 23.6

DOE/PETC
COAL LIQUEFACTION
LOW RANK COAL

H2 PRODUCTION BY NATURAL GAS REFORMING OPTION

OVERALL WATER FLOW DISTRIBUTION

1092048-2

Tabl 23.16

Overall CW & Makeup Water Bal – Low Rank Coal Option 6

Plant Name	Plant	Heat Duty MMBTU/H	CW Return Temp, F	CW Flow GPM
Coal Crushing/Drying	1	90.0	115	6,429
Slurry Drying	1.4	10.0	115	714
Coal Liquefaction	2	123.6	115	8,829
Gas Plant	3	110.0	115	7,857
Naphtha Hydrotreater	4	31.0	115	2,214
Gas Oil Hydrotreater	5	1.6	115	114
Hydrogen Purification	6	4.9	115	350
Critical Solvent De-Ashing	8	------	---	-----
H2 by NG/Steam Reforming	9.01	142.4	115	10,174
Sulfur Recovery	11	88.3	115	6,307
Raw Mat and Prod Storage	20	1.4	115	100
Steam/Power Generation	31.1	1,491.0	115	106,500
Raw/Cooling/Potable Water	32	------	---	-----
Fire Protection	33	------	---	-----
Waste Water Treatment	34	------	---	-----
Solid Waste Disposal	37	------	---	-----
Ammonia Recovery	38	947.5	115	67,679
Phenol recovery	39	86.4	115	6,171
Sub-Total		3,128.1	115	223,438
Contingency (~7%)				16,562
Total Design Flow				**240,000**
CW Supply Temperature, F	87			
Average CW Return Temp, F	115			

Requirement of Makeup Water		
Evaporation Loss	2.8%	6,720
Drift Loss	0.2%	480
Blowdown (4 Cycles)	1.0%	2,400
Total, GPM		**9,600**
Supply of Makeup Water	**Plant**	
Treated Waste Water	34	3,167
Clarified Water	32	6,433
Total, GPM		**9,600**

Table 23.17

Overall Raw Water Requirement - Low Rank Coal Option 6

Plant Name	Plant No.	Water Makeup GPM	Safety Margin	Design Capacity GPM
Demineralized Water				
BFW Makeup	31	2,478	16%	2,885
Boiler Blowdown	31	654	7%	700
Hydrogen Purification	6	82	22%	100
Sub-Total		3,214	15%	3,685
Potable Water				
Drinking Water	All	100	20%	120
Sub-Total		100	20%	120
Clarified Water				
Naphtha Hydrotreater	4	17	10%	19
Gas Oil Hydrotreater	5	84	12%	94
Fluidized Bed Combustor	31.4	129	16%	150
Cooling Tower	32	9,600	10%	10,600
Utility Stations	All	550	9%	600
Sub-Total		10,380	10%	11,463
Total Makeup Water Requirement		13,694	11%	15,267
Treated Water Recycle	34	4,857	9%	5,299
Net Raw Water Requirement		8,837	13%	9,968

23.5.4 Overall Hydrogen Flow Distribution

The overall hydrogen flow distribution for the entire complex is shown in Figure 23.7.

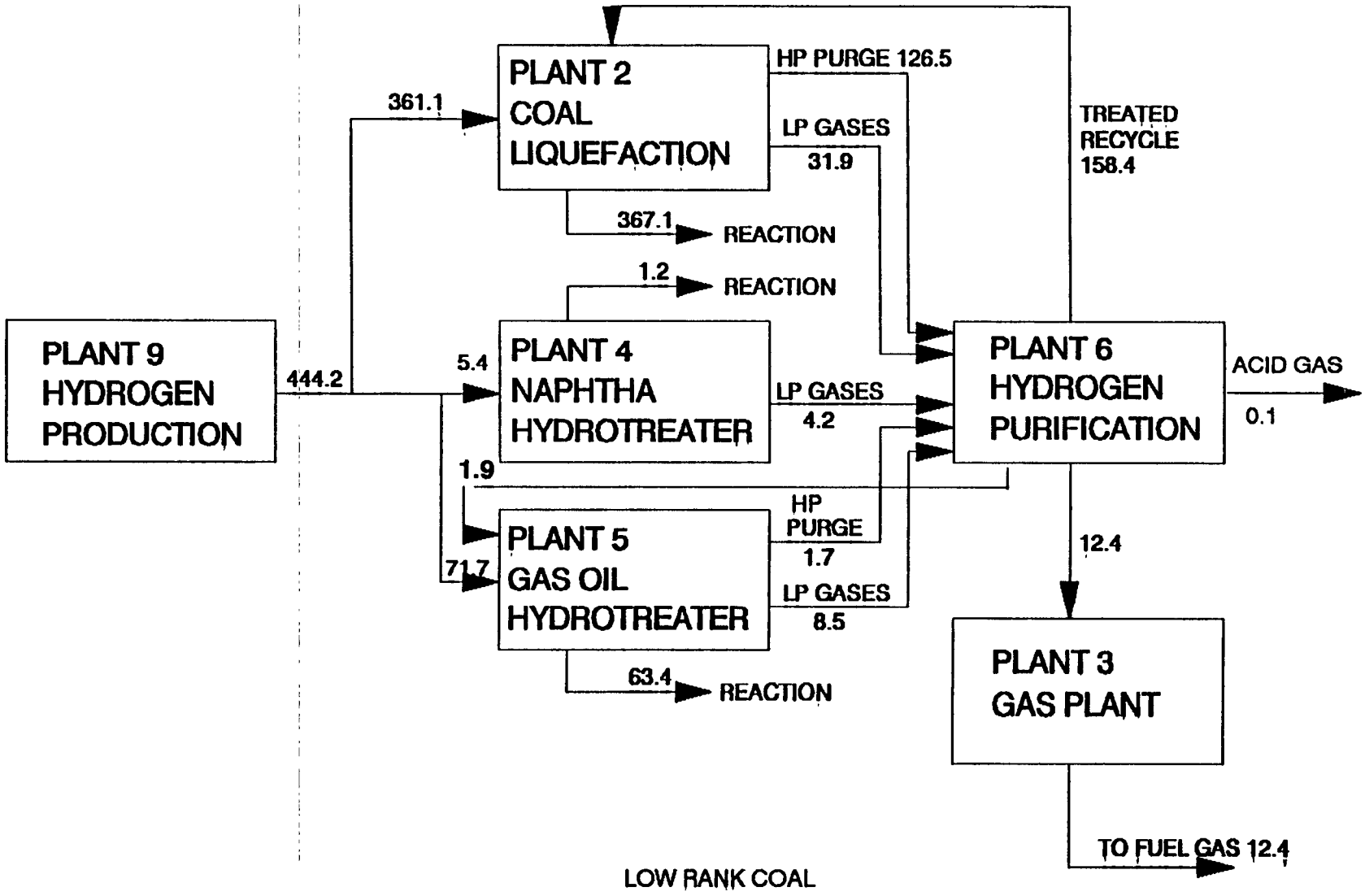

NOTES:
Hydrogen flow rates are in MMSCFD (Pure H2)

OVERALL HYDROGEN FLOW DISTRIBUTION
HYDROGEN BY NATURAL GAS REFORMING OPTION

H2FLOWLR.DRW 10/94

FIGURE 23.7

Table 23.18

Overall Steam Balance – Low Rank Coal Option 6

Plant Name	Plant No.	Steam Produced MLb/H	Steam Consumed MLb/H	Cond Produced MLb/H	Cond Consumed MLb/H
600 Psig, 720F (Superheated)					
Steam and Power	31	208.9			208.9
Steam Turbine Generation	31.1		3,238.0	3,238.0	
Fluidized Bed Combustor	31.4	3,238.0			3,238.0
Coal Liquefaction (1)	2		5.5	----	
All Turbine Drives	All		73.0	73.0	
Letdown to 600# Sat			130.4	----	
Sub–Total		3,446.9	3,446.9	3,311.0	3,446.9
600 Psig, 489F (Saturated)					
Letdown from 600# Sup–Stm		130.4			----
Coal Liquefaction	2	97.1			97.1
Gas Plant	3		214.7	214.7	
Naphtha Hydrotreater	4		38.0	38.0	
Hydrogen Production (2)	9.01	2,152.0	930.9	----	2,152.0
Sulfur Recovery	11		35.3	35.3	
Ammonia Recovery	38		320.5	320.5	
Letdown to 150# Steam			840.1	----	
Sub–Total		2,379.5	2,379.5	608.5	2,249.1
150 Psig, 366F (Saturated)					
Letdown from 600# Sat Steam		840.1			----
Coal Liquefaction (1)	2	47.4	1.8	----	47.4
Gas Oil Hydrotreater (1)	5	118.8	5.0	----	118.8
ROSE SR (1)	8		14.5	----	
Sulfur Recovery	11	19.9			19.9
Tanks Warmup	20		22.0	22.0	
Ammonia Recovery	38		512.1	512.1	
Phenol Recovery	39		31.3	31.3	
Steam Tracing	All		40.0	40.0	
Letdown to 50# Steam			399.5	----	
Sub–Total		1,026.2	1,026.2	605.4	186.1
50 Psig, 298F (Saturated)					
Letdown from 150# Steam		399.5			----
Coal Liquefaction (1)	2	328.8	271.2	----	328.8
Gas Plant	3		17.2	17.2	
Gas Oil Hydrotreater	5		44.7	44.7	
Hydrogen Purification	6		202.0	202.0	
Sulfur Recovery	11		11.7	11.7	
Tanks Warmup	20		3.5	3.5	
Waste Water Treatment	34		3.0	3.0	
Phenol Recovery	39		85.0	85.0	
Steam Tracing	All		80.0	80.0	
Utility Stations (1)	All		10.0	----	
Sub–Total		728.3	728.3	447.1	328.8
Total		7,580.9	7,580.9	4,972.0	6,210.9

Blowdown (5% of total BFW)	326.9	MPPH	653.8	GPM
Overall Makeup Water (BFW)	1,565.8	MPPH	3,131.6	GPM

Note 1 ... Steam used for Stripping, Vacuum Jet Ejectors, Fired Heaters is lost to waste water.

Note 2 ... Steam used for Natural Gas Reforming is partly consumed by reaction and rest lost to waste water.

Table 23.19

Overall Condensate Balance – Low Rank Coal Option 6

Description	Produced MLb/H	Produced GPM	Consumed MLb/H	Consumed GPM
Condensate				
600# Steam, Superheated	3,311.0	6,622.0	3,446.9	6,893.8
600# Steam, Saturated	608.5	1,217.0	2,249.1	4,498.2
150# Steam, Saturated	605.4	1,210.8	186.1	372.2
50# Steam, Saturated	447.1	894.2	328.8	657.6
BFW Blowdown (5% of Total)	----	----	326.9	653.8
Condensate Makeup Water	1,565.8	3,131.6	----	----
Grand Total	6,537.8	13,075.6	6,537.8	13,075.6

Plant–wise Condensate Analysis

Plant	Condensate Produced MPPH	Condensate Consumed MPPH	Condensate Net Makeup MPPH
2	0.0	473.3	473.3
3	231.9	0.0	(231.9)
4	38.0	0.0	(38.0)
5	44.7	118.8	74.1
6	202.0	0.0	(202.0)
8	0.0	0.0	0.0
9.01	0.0	2,152.0	2,152.0
11	47.0	19.9	(27.1)
20	25.5	0.0	(25.5)
31	0.0	208.9	208.9
31.1	3,238.0	0.0	(3,238.0)
31.4	0.0	3,238.0	3,238.0
34	3.0	0.0	(3.0)
38	832.6	0.0	(832.6)
39	116.3	0.0	(116.3)
--	193.0	0.0	(193.0)
B/D		326.9	326.9
Total	4,972.0	6,537.8	1,565.8

24. OVERALL CAPITAL COSTS

24. Overall Capital C sts for the Low Rank Coal Study and the Option 6 Case

The Nth plant overall capital cost estimates (low rank coal study) for the entire complex are presented in this section. The estimate basis, methodology and accuracy are the same as for the baseline case.

The inside battery limits (ISBL) and outside battery limits (OSBL) plant field costs and breakdowns are summarized in Sections 24.1 and 24.2 respectively. These same field costs and breakdowns are given in the appropriate capital cost sections of each plant throughout this report.

Section 24.1 presents the ISBL plants on installed basis. The ISBL installed basis costs includes the following costs:

- Field costs of ISBL plants
- Field costs of OSBL plants
- Home office costs and fees
- A suitable contingency

The above costs, when added together become the total installed cost of the complex. These costs (field costs of OSBL plants, Home office costs and fees and a suitable contingency) have been allocated to the ISBL plants. In this fashion, each ISBL plants cost can now be expressed on "Installed" basis. Such allocation of costs and the resulting installed costs for each plant and for the entire complex are shown in Tables 24.3 and 24.4.

This installed cost for the Nth Plant based on fourth quarter 1993 datum are $3692.1 million dollars for the hydrogen production by coal gasification and $3041.9 million dollars for the case for hydrogen by steam reforming. No project escalation is included in these figures for disbursement of this cost over the life of this project. Such escalation will be addressed in the economics section of this report.

24.1 ISBL Plant Field Cost Summaries

The ISBL plant field costs for the entire complex are developed by estimating the field costs of each process plant. The field cost for each plant is comprised of 1) major equipment, 2) bulk materials, 3) subcontracts, 4) direct labor and 5) distributables. Costs data thus developed are shown in Table 24.1.

Table 24.1

LOW RANK COAL
HYDROGEN BY COAL GASIFICATION
Estimated Total Field Costs
for Coal Liquefaction Complex - Process Units (ISBL)
(4th Quarter 1993 $Million)
Nth Plant

Plant No.	Process Units	Major Equipment	Bulk Materials	Sub-Contracts	Direct Labor	Distribu-tables	Total Field Costs
1 & 1.4	Coal Handling	55.34	53.16	27.00	25.50	25.50	186.50
2	Coal Liquefaction	262.00	218.00	26.00	143.20	143.20	792.40
3	Gas Plant	7.10	4.80	0.70	3.30	3.30	19.20
4	Naphtha Hydro.	3.40	2.40	0.30	1.70	1.70	9.50
5	Gas Oil Hydro.	35.40	33.60	3.00	21.00	21.00	114.00
6	H_2 Purification	104.40	52.20	9.00	33.60	33.60	232.80
8	ROSE Unit	10.00	7.70	3.10	6.30	6.30	33.40
9	H_2 From Coal	108.00	91.90	27.50	62.80	62.80	353.00
10	Air Sep	85.60	21.40	11.80	32.90	32.90	184.60
11	Sulfur Plant	3.00	2.20	0.60	2.20	2.20	10.20
38	NH3 Recovery	13.70	10.90	1.43	9.60	9.60	45.20
39	Phenol 11	4.45	4.71	0.25	3.94	3.94	17.30
	TOTALS	**692.49**	**503.07**	**110.66**	**346.04**	**346.04**	**1998.10**

Table 24.2

LOW RANK COAL
HYDROGEN BY STEAM REFORMING
Estimated Total Field Costs
for Coal Liquefaction Complex - Process Units (ISBL)
(4th Quarter 1993 $Million)
Nth Plant

Plant No.	Process Units	Major Equipment	Bulk Materials	Sub-Contracts	Direct Labor	Distribu-tables	Total Field Costs
1 & 1.4	Coal Handling	42.61	40.93	20.79	19.63	19.63	143.60
2	Coal Liquefaction	262.00	218.00	26.00	143.20	143.20	792.40
3	Gas Plant	7.10	4.80	0.70	3.30	3.30	19.20
4	Naphtha Hydro.	3.40	2.40	0.30	1.70	1.70	9.50
5	Gas Oil Hydro.	35.40	33.60	3.00	21.00	21.00	114.00
6	H_2 Purification	104.40	52.20	9.00	33.60	33.60	232.80
8	ROSE Unit	10.00	7.70	3.10	6.30	6.30	33.40
9	H_2 From Coal	44.21	37.62	11.26	25.71	25.71	144.50
10	Air Sep	9.83	2.46	1.36	3.78	3.78	21.20
11	Sulfur Plant	1.12	0.82	0.22	0.82	0.82	3.80
38	NH3 Recovery	13.43	10.72	1.40	9.42	9.42	44.40
39	Phenol 11	4.45	4.70	0.25	3.85	3.85	17.10
	TOTALS	**537.94**	**415.95**	**77.38**	**272.31**	**272.31**	**1575.90**

24.2 OSBL Plant Field Cost Summaries

The OSBL plant field costs for the entire complex are developed by estimating the field costs of each offsite/utilities plant. The field cost for each plant is comprised of 1) major equipment, 2) bulk materials, 3) subcontracts, 4) direct labor and 5) distributables. Results thus obtained are shown in Table 24.3 and 24.4.

Tabl 24.3
LOW RANK COAL (H2 BY COAL GASIFICATION)
ESTIMATED TOTAL FIELD COSTS
for Coal Liquefaction Complex - Offsites/Utilities (OSBL)
(4th Quarter 1993 $Million)
Nth Plant

Plant No.	Offsite Units	Major Equipment	Bulk Materials	Sub-contracts	Direct Labor	Distribu-tables	Total Field Costs
19	Relief & Blowdown	1.90	1.50	0.10	1.00	1.10	5.60
20	Tankage	40.50	28.10	3.80	18.40	18.30	109.10
21	Interconn. Piping	---	23.30	4.00	16.70	16.70	60.70
22	Product Shipping	0.20	0.30	0.10	0.10	0.10	0.80
23	Tank Car/Truck	2.10	3.70	0.80	2.60	2.60	11.80
24	Ash Disposal	11.30	5.10	1.60	4.70	4.70	27.40
30	Electrical Distribution	---	41.80	---	12.90	12.90	67.60
31	Steam & Power	186.20	35.00	3.30	24.50	24.50	273.50
32	Water	19.10	7.80	5.10	5.00	4.90	41.90
33	Fire Protection	2.90	5.40	0.20	5.40	5.40	19.30
34	Sewage	9.10	11.10	0.80	11.60	11.60	44.20
35	Instr/Plant air	2.90	1.80	---	1.80	1.80	8.30
36	Flush Oil	1.10	7.10	---	2.70	2.70	13.60
40	Site Dev	---	----	78.70	----	----	78.70
41	Buildings/DCS	----	25.70	48.30	----	----	74.00
42	Telecomm	----	2.10	----	----	----	2.10
	TOTAL	**279.90**	**199.80**	**147.10**	**107.40**	**107.30**	**841.50**

Table 24.4
LOW RANK COAL STUDY (H2 BY STEAM REFORMING)
ESTIMATED TOTAL FIELD COSTS
for Coal Liquefaction Complex - Offsites/Utilities (OSBL)
(4th Quarter 1993) $Million)
Nth Plant

Plant No.	Offsite Units	Major Equipment	Bulk Materials	Sub-contracts	Direct Labor	Distribu-tables	Total Field Costs
19	Relief & Blowdown	1.70	1.30	0.10	1.20	1.10	5.40
20	Tankage	36.50	24.50	3.30	21.40	19.30	105.00
21	Interconn. Piping	----	20.30	3.50	19.50	17.60	60.90
22	Product Shipping	0.20	0.30	0.10	0.10	0.10	0.80
23	Tank Car/Truck	1.90	3.30	0.70	3.10	2.80	11.80
24	Ash Disposal	10.20	4.40	1.40	5.50	5.00	26.50
30	Electrical Distribution	----	35.20	----	15.40	13.90	64.50
31	Steam & Power	149.00	29.50	2.80	29.40	26.40	237.10
32	Water	15.30	6.60	4.30	5.90	5.30	37.40
33	Fire Protection	2.30	4.50	0.20	6.40	5.80	19.20
34	Sewage	7.30	9.40	0.60	13.90	12.50	43.70
35	Instr/Plant air	2.30	1.60	----	2.20	2.00	8.10
36	Flush Oil	0.90	6.00	----	3.30	2.90	13.10
37	Solid Waste	2.10	----	----	----	----	2.10
40	Site Dev	----	----	64.40	----	----	64.40
41	Buildings/DCS	----	21.00	39.50	----	----	60.50
42	Telecomm	----	1.70	----	----	----	1.70
	TOTAL	229.70	169.60	121.20	127.30	114.70	762.50

Table 24.5
Nth Plant Capital Costs for the Complex

Low Rank Coal with Hydrogen Production by Coal Gasification

Plant	No. of Trains	ISBL Plant Field Costs 1000$	ISBL Plant Cost Adj. with OSBL Costs 1000$	Installed Plant Costs 1000$
1 & 1.4	10 & 4	186,500	265,000	344,600
2	4	792,400	1,125,900	1,464,200
3	1	19,200	27,300	35,500
4	1	9,500	13,500	17,600
5	1	114,000	162,000	210,600
6	1	232,800	330,800	430,200
8	1	33,400	47,500	61,700
9	5	353,000	501,600	652,300
10	5	184,600	262,300	341,100
11	1	10,200	14,500	18,800
38	1	45,200	64,200	83,500
39	1	17,300	24,600	32,000
Total		**1,998,100**	**2,839,200**	**3,692,100**

Tabl 24.6
Nth Plant Capital Costs for the Complex

Low Rank Coal with Hydrogen Production by Steam Reforming

Plant	Total No. of Trains	ISBL Plant Field Costs 1000$	ISBL Plant Cost Adj. with OSBL Costs 1000$	Installed Plant Costs 1000$
1 & 1.4	10 & 4	143,600	213,100	277,200
2	4	792,400	1,175,700	1,529,500
3	1	19,200	28,500	37,100
4	1	9,500	14,100	18,300
5	1	114,000	169,100	220,100
6	1	232,800	345,400	449,400
8	1	33,400	49,600	64,500
9-01	3	144,500	214,400	278,900
10	1	21,200	31,500	40,900
11	1	3,800	5,600	7,300
38	1	44,400	65,800	85,700
39	1	17,100	25,400	33,000
Total		**1,575,900**	**2,338,100**	**3,041,800**

25. ASPEN PLUS PROCESS SIMULATION MODEL OF THE LOW RANK COAL CASE AND OPTION 6

25. ASPEN/PLUS Process Simulation Model of the Low Rank Coal Cas and Option 6 (Steam Reforming of Natural Gas plus FBC Unit for Hydrogen Production)

25.1 General Description

An ASPEN/PLUS process simulation model of the low rank coal case was developed starting from the improved baseline (high space velocity case) model. The overall process flow diagram for the low rank coal case is shown in Section 4 of this report as overall plant configuration and depicted in Figure 4.1. The block flow diagram for the ASPEN/PLUS process simulation model is shown in Figure 25.1.

The model for the low rank coal study was developed by adding to the improved baseline model where appropriate. Significant additions were required in the Fortran source code of the user Fortran block models for:

- Plant 2 (coal liquefaction plant) to account for the different coal liquefaction yields resulting from the low rank coal and composition of the syncrude product.
- Plant 4 (naphtha hydrotreater) to account for the different feed composition and hydrotreating yields.
- Plant 5 (gas oil hydrotreater) to account for the different feed composition and hydrotreating yields.

The above Fortran source code additions were required because significant changes were made in the basic yields and/or composition of the streams leaving these plants. The previously published Fortran user block models listing of the ASPEN/PLUS direct coal liquefaction process simulation model in Appendix B of the low rank coal study contains these changes. In addition to the changes to the Fortran source code for the above plants, many parameters in the ASPEN/PLUS input file for these plants were changed.

These additions were made in the format: If then.... This manner of code adding allows simulating either the low rank coal case or other previously coded cases.

Additional changes to the ASPEN/PLUS input file also were required for Plant 1 and 1.4 (coal grinding and drying plant) to reflect the use of plant 1 for crushing and grinding and plant 1.4 for drying with hot nitrogen.

Appendix A contains a listing of the DCLN0.INP file for simulating the low rank coal with hydrogen production by coal gasification and appendix C contains a listing of the DCLN1.INP Aspen input file for simulating the low rank coal with hydrogen production by steam reforming.

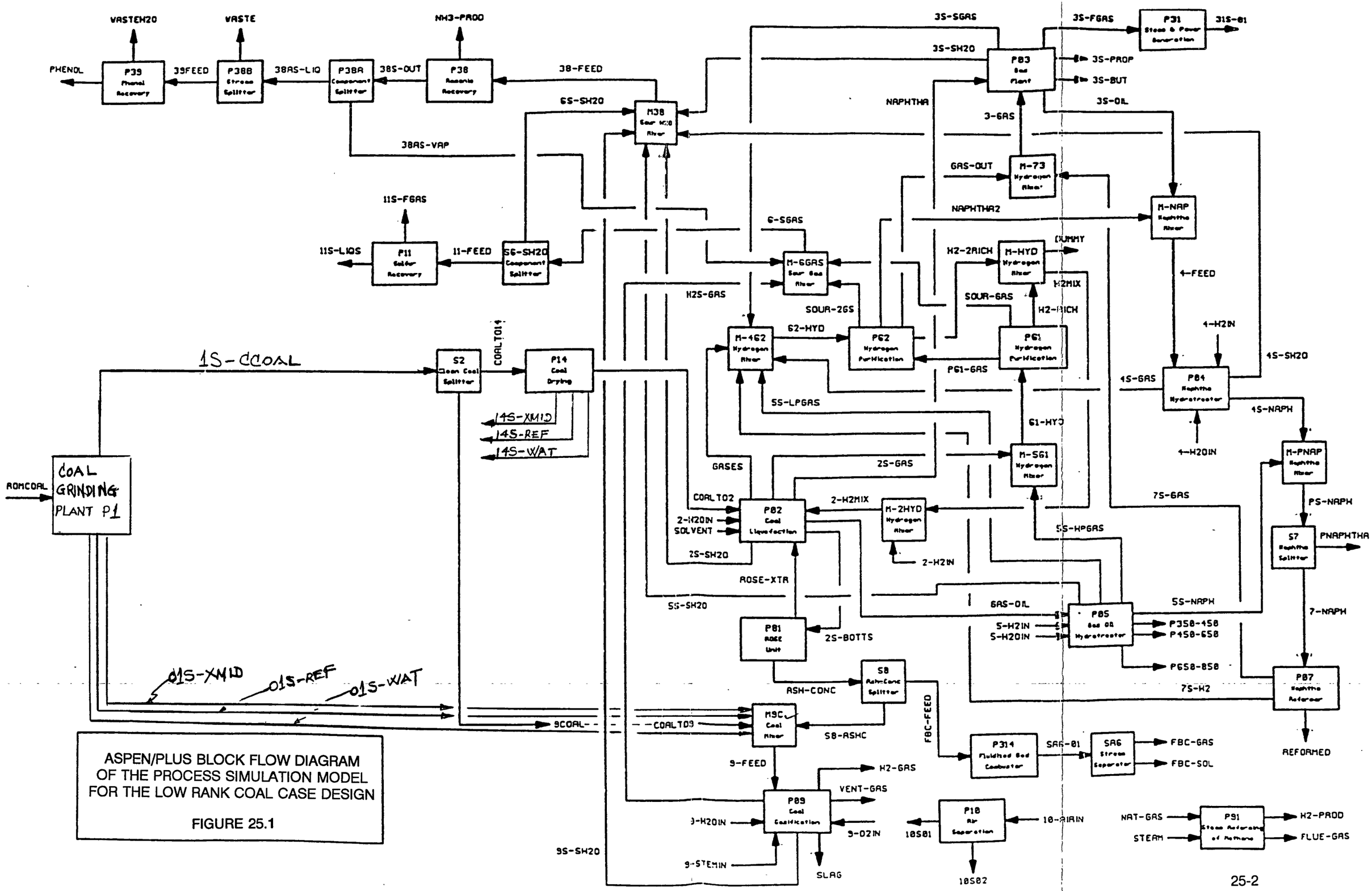

ASPEN/PLUS BLOCK FLOW DIAGRAM OF THE PROCESS SIMULATION MODEL FOR THE LOW RANK COAL CASE DESIGN

FIGURE 25.1

25.2 Comparison of Mod I Predictions with the Low Rank Coal Study

Table 25.1 compares the ASPEN PLUS process simulation model results with those of the engineering design for the low rank coal study with hydrogen production by coal gasification.

The major yields are predicted well. The largest absolute difference is 2.42 percent, for the sulfur production.

The total installed capital was very well predicted with a negligible difference between the model and the design calculations.

25.3 Comparison of Model Predictions with Low Rank Coal Design with Hydrogen Production by Steam Reforming of Natural Gas

With only one minor change, the DCLN0.INP ASPEN PLUS input file shown in Appendix A can be modified to simulate the low rank coal design combined with the hydrogen production by steam reforming of natural gas option. This case also has a fluidized bed combustor coupled with a steam turbine generator to consume the ash concentrate stream and produce electric power. The overall process flowsheet for this situation is identical to the overall plant configuration shown in Section 23 of this report (Figure 23.5). The block flow diagram for the ASPEN PLUS process simulation model is the same as that of the original baseline design as shown in Figure 25.1. (For convenience we have included a copy of this file in the diskettes (DCLN1.INP) and also a listing in Appendix C.)

The hydrogen production by steam reforming of natural gas option is activated from within the input file via Fortran block SETEM and splitter block S9. The baseline design case hydrogen production by coal gasification method, Plants 9 and 10, is automatically deactivated when the Plant 9.1 (hydrogen production by steam reforming of natural gas plant) option is chosen. This two-block approach for switching between the different hydrogen production methods uses efficient, feed-forward control and maintains the overall mass balance in the model.

To activate the hydrogen production by steam reforming of natural gas (Plant 9.1) option, the variable N9 in Fortran block SETEM is set to a value of 1. This automatically resets the inlet stream flow rates to Plants 9 and 10 to very small values, effectively shutting off the feed to these plants and the coal gasification option. The splitter block is then used to reset the required hydrogen rate for Plant 9, H9NEED, to a very small value to ensure that hydrogen only will be produced by the desired method (steam reforming of natural gas), and that the model will be in mass balance.

Table 25.2 compares these ASPEN PLUS simulation model results with those of the engineering design. The major yields are predicted well. The largest absolute difference is 2.06% for the liquid propane.

The total installed capital was very well predicted with a negligible difference between the model and the design calculations.

Table 25.1
Comparison of the ASPEN PLUS Process Simulation Model with the Process Design for the Low Rank Coal Study
Hydrogen Production by Coal Gasification

Description	Model	Design	Delta (M-D)	Percent Delta
ROM Coal Feed Rate, MTSD (dry)	24.951	24.952	-0.001	0.00
Ash Production Rate, TSD	1664	1658	6.000	0.36
Natural Gas Rate, MMMBTU/SD	109.783	109.632	0.151	0.14
Electricity Purchase, MEGA-WH/SD	0	0	0.000	0.00
Raw Water Make-up, MMGSD	12.641	12.641	0.000	0.00
Naphtha Production, MBSD	12.916	13.063	-0.147	-1.14
Lt. Dist. Production, MBSD	6.633	6.61	0.023	0.35
Hvy. Dist. Production, MBSD	24.078	24.167	-0.089	-0.37
Gas Oil Production, MBSD	21.358	21.221	0.137	0.64
Liquid Propane Production, MBSD	4.182	4.268	-0.086	-2.06
Mixed Butanes Production, MBSD	2.246	2.251	-0.005	-0.22
Ammonia Production, TSD	167	167	0.000	0.00
Phenol Production, TSD	45	45	0.000	0.00
Sulfur Production, TSD	124	127	-3.000	-2.42
Number of Operators/Boardmen	430	430	0.000	0.00
Tot. Installed Capital, $MM (E-yr)	3692.023	3692.100	-0.077	0.00
Plant Costs, MM$				
1.&1.4 Coal Cleaning	344.608	344.600	0.008	0.00
2 Liquefaction	1464.169	1464.200	-0.031	0.00
3 Gas Plant	35.473	35.500	-0.027	-0.08
4 Naphtha Hydrotreater	17.554	17.600	-0.046	-0.26
5 Gas Oil Hydrotreater	210.645	210.600	0.045	0.02
6 H2 Recovery	430.134	430.200	-0.066	-0.02
8 ROSE-SR	61.715	61.700	0.015	0.02
9 H2 from Coal	652.287	652.300	-0.013	0.00
10 Air Separation	341.103	341.100	0.003	0.00
11 Sulfur	18.847	18.800	0.047	0.25
38 Ammonia Recovery	83.519	83.500	0.019	0.02
39 Phenol Recovery	31.969	32.000	-0.031	-0.10
TOTAL	3692.023	3692.100	-0.077	0.00

Table 25.2
Comparison of the ASPEN PLUS Process Simulation Model with the Process Design for the Low Rank Coal Case - Option 6
Hydrogen Production by Steam Reforming of Natural Gas Option

Description	Model	Design	Delta (M-D)	Percent Delta
ROM Coal Feed Rate, MTSD (dry)	17.929	17.929	0.000	0.00
Ash Production Rate, TSD	1380	1380	0.000	0.00
Natural Gas Rate, MMMBTU/SD	321.052	321.46	-0.408	-0.13
Electricity Purchase, MEGA-WH/SD	0	0	0.000	0.00
Raw Water Make-up, MMGSD	12.725	12.725	0.000	0.00
Naphtha Production, MBSD	12.916	13.063	-0.147	-1.14
Lt. Dist. Production, MBSD	6.633	6.61	0.023	0.35
Hvy. Dist. Production, MBSD	24.078	24.167	-0.089	-0.37
Gas Oil Production, MBSD	21.358	21.221	0.137	0.64
Liquid Propane Production, MBSD	4.182	4.268	-0.086	-2.06
Mixed Butanes Production, MBSD	2.246	2.251	-0.005	-0.22
Ammonia Production, TSD	162	162	0.000	0.00
Phenol Production, TSD	45	45	0.000	0.00
Sulfur Production, TSD	37	37	0.000	0.00
Number of Operators/Boardmen	328	328	0	0
Tot. Installed Capital, $MM (E-yr)	3044.022	3041.900	2.122	0.07
Plant Costs, MM$				
1.&1.4 Coal Cleaning	277.132	277.200	-0.068	-0.02
2 Liquefaction	1529.559	1529.500	0.059	0.00
3 Gas Plant	37.057	37.100	-0.043	-0.12
4 Naphtha Hydrotreater	18.338	18.300	0.038	0.21
5 Gas Oil Hydrotreater	220.053	220.100	-0.047	-0.02
6 H2 Recovery	449.344	449.400	-0.056	-0.01
8 ROSE-SR	64.472	64.500	-0.028	-0.04
9 H2 from Coal	278.917	278.900	0.017	0.01
10 Air Separation	43.15	40.900	2.250	5.21
11 Sulfur	7.249	7.300	-0.051	-0.70
38 Ammonia Recovery	85.705	85.700	0.005	0.01
39 Phenol Recovery	33.046	33.000	0.046	0.14
TOTAL	3044.022	3041.900	2.122	0.07

26. OVERALL UTILITY UNIT PRICES AND CONSUMPTIONS

26. Overall Raw Material, Catalyst and Chemical C sts (Low rank coal study)

Raw Material

The raw material for this plant is ROM coal. The amount of coal required for the entire complex is 24,952 TPSD (MF basis). The unit cost for ROM coal as received basis is $ 4.50 per ton and $ 6.52 ~~dlls~~ per ton on a dry basis.

Catalyst and chemicals cost for the entire complex are presented in Table 26.1 below. This table presents the costs in two ways: 1) as part of the variable operating costs, and 2) as a part of the fixed captial costs (initial catalysts and chemicals).

Table 26.1
CATALYST AND CHEMICALS COST

Plant No.	Description of Plant	Cost per Year Thousand Dollars	
		(1)	(2)
1	Coal Cleaning and Handling	405	301
2	Coal Liquefaction Plant	73,062	25,168
3	Gas Plant	20	17
4	Naphtha Hydrotreater	47	154
5	Gas Oil Hydrotreater	534	1,738
6	Hydrogen Purification	46	235
8	Critical Solvent Deashing Unit	47	202
9	Hydrogen Production By Coal Gasification	1,948	6,287
10	Air Separation		
11	By-Product Sulfur Recovery	457	949
31	Steam and Power Generation	76	20
32	Raw Cooling and Potable Water Systems	2,639	707
34	Sewage and Effluent Water Treatment	321	85
38	Ammonia Recovery	365	124
39	Phenol Recovery	32	12
	Total	80,000	36,000

Note:

(1) Catalysts and Chemicals Cost per year as a part of variable operating costs.
(2) Initial catalyst and chemicals cost as a part of capital costs.

27. OVERALL UTILITY UNIT PRICES AND CONSUMPTIONS

27. Ov rall Utility Unit Prices and Consumptions for Low Rank Coal

The overall utility unit prices are shown below in Table 27.1

Table 27.1

Raw Material and Utility Pricing

Item	Cost
Feed Coal	4.50 $/s. ton as received
Raw Water	2.50 $/Mgal
Natural Gas	2.00 $/MMBTU

Water and natural gas requirements for the low rank coal and low rank coal with natural gas reforming option for hydrogen production are shown in Table 27.2.

Table 27.2

Comparison of Water and Natural Gas Requirements

	Low Rank Coal	Low Rank Coal with Natural Gas Reforming
Water, gpm	8,778	8,837
Natural gas, MMBTU/hr	4,568	5,559*

* Does not include natural gas for chemical reaction

28. OVERALL PRODUCT/BYPRODUCT VALUES

28. Overall Product/By-product Values (Low Rank Coal)

Product

The product valuations (expressed as syncrude premium) range from 1.07 to 1.27. The upper (1.27) and lower limits (1.07) will be utilized in the economics section.

By-product

The by-products for this complex are sulfur, ammonia, phenol, propane and mixed butanes. The production rate of these streams for the low rank coal cases with Hydrogen production by coal gasification and by steam reforming and their respective prices are shown below.

Table 28.1

By-product Values

	Production Rates		
	H2 by Coal Gasification	H2 by Steam Reforming	Price
Sulfur,STPD	127	37	$ 47.30/ton
Ammonia,STPD	167	162	$200.00/ton
Phenol,STPD	45	45	$625.00/ton
Propane,BPSD	4,268	4,268	$ 12.29/bbl
Mixed Butanes,BPSD	2,251	2,251	$ 13.86/bbl

29. OVERALL LABOR REQUIREMENTS AND RATES

29. Overall Labor Requirements and Rates (Low Rank Coal Cases)

29.1 Staffing Plan

The overall staffing plan for the liquefaction complex is based on the following assumptions:

- The complex is operated by a major oil company with support from corporate engineering

  Process plants are divided into 5 areas with dedicated maintenance for each area

- Contract maintenance will be utilized during any plant turn-around and other non-routine maintenance

- The complex is operated from one central control house, except for shipping and loading

29.1.1 Low Rank Coal Liquefaction with Hydrogen Production by Coal Gasification

The staffing plan for the entire complex is shown in various figures. Figure 29.1 is the overall plant management chart. Figures 29.2 through 29.7 respectively present the organization chart and personnel for the 1) laboratory, 2) operations, 3) engineering, 4) environmental health, safety and security, 5) administration and 6) maintenance.

29.1.2 Low Rank Coal Liquefaction with Hydrogen Production by Natural Gas Reforming

For this case the manpower requirement changes only for the operating organization. Therefore, the numbers in Figure 29.3 is the only one which undergo change. Figure 29.8 shows the results of such changes. These changes in operators requirement are due to the difference in number of trains of various plants.

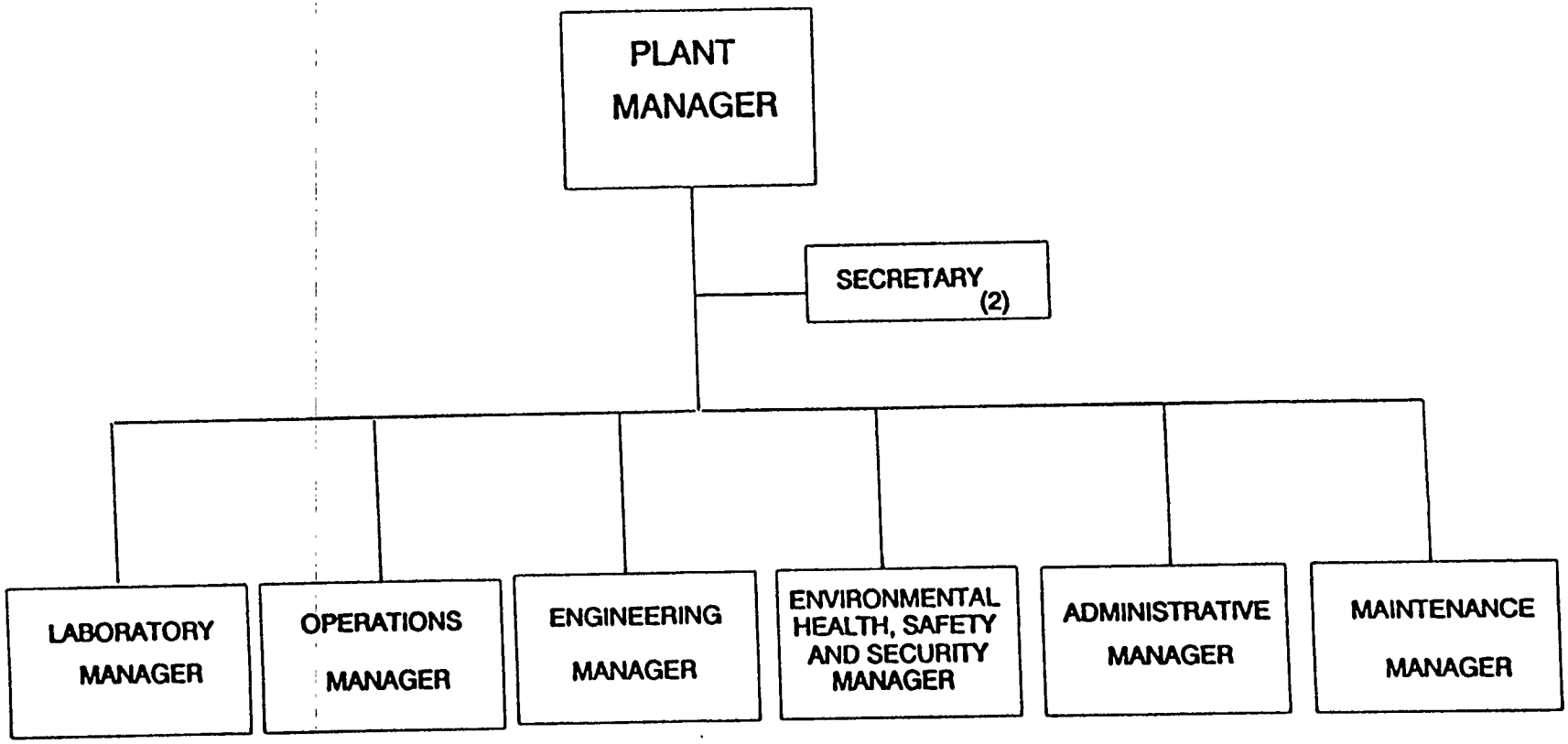

Figure 29.1

OVERALL PLANT ORGANIZATION

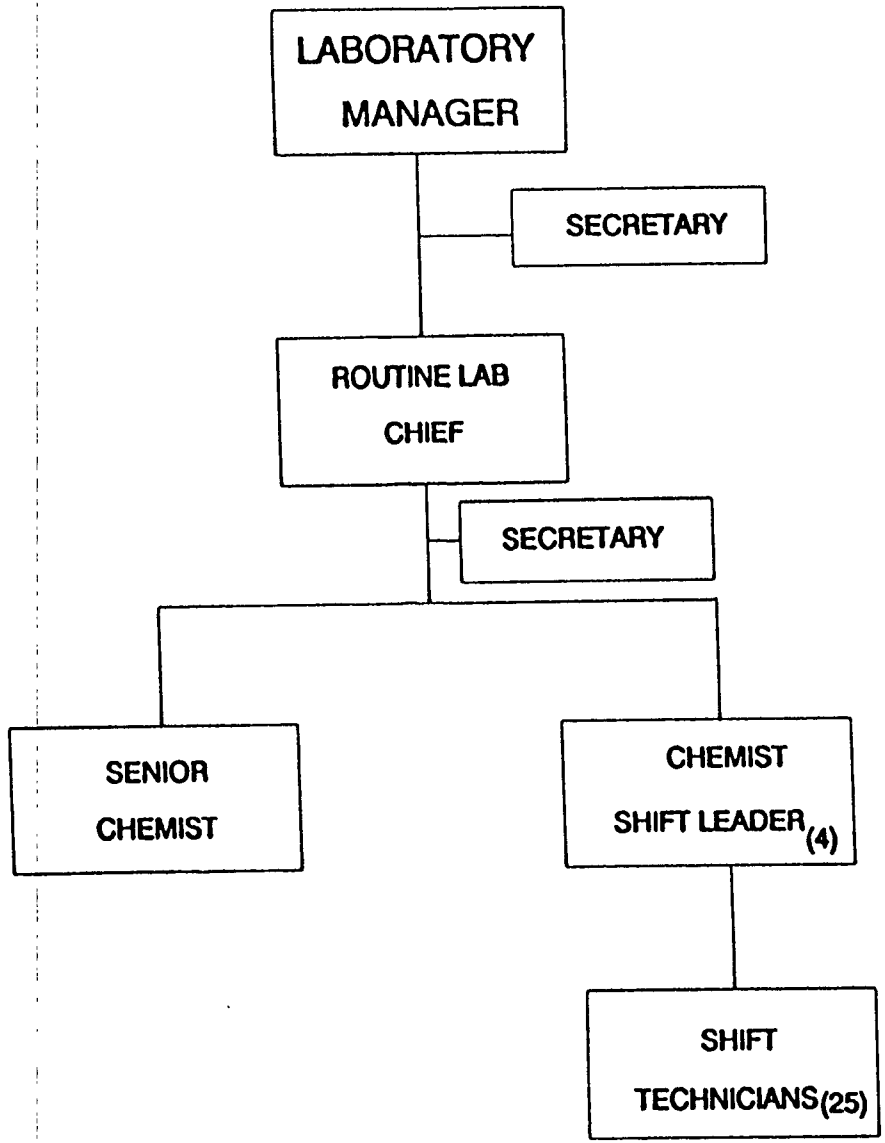

Figure 29.2
LABORATORY ORGANIZATION AND PERSONNEL

Figure 29.3
OPERATIONS ORGANIZATION AND PERSONNEL

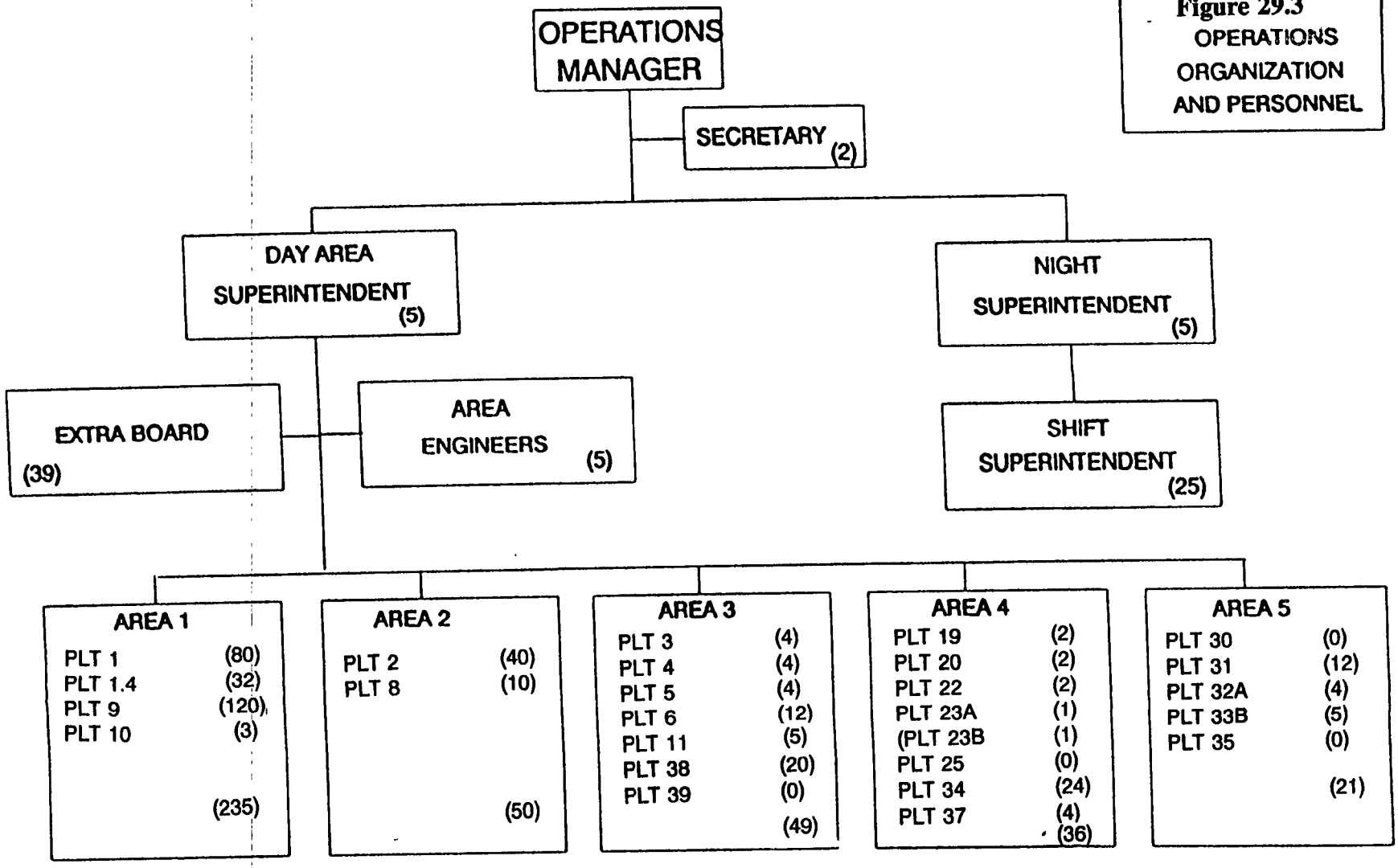

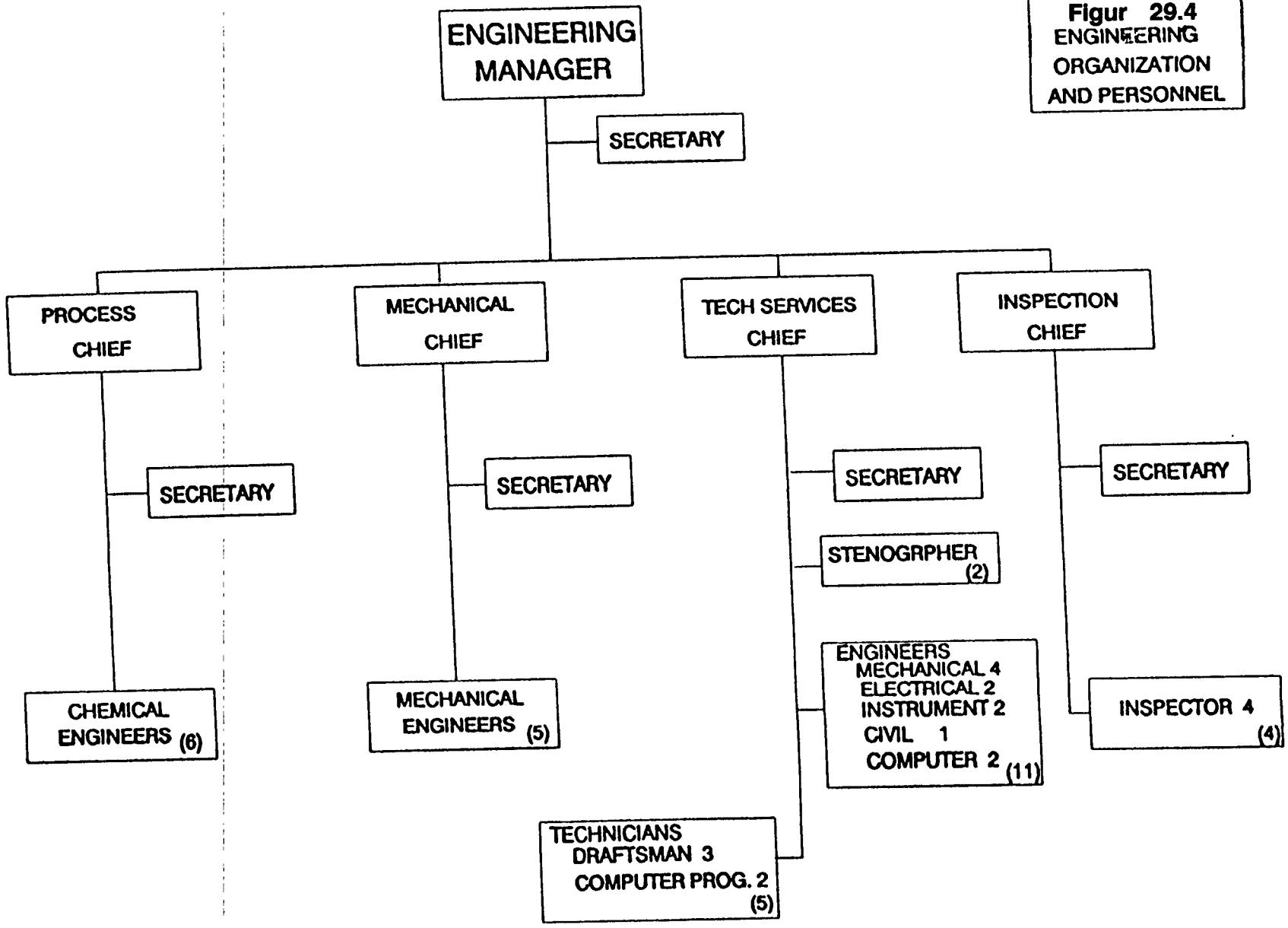

Figur 29.4
ENGINEERING ORGANIZATION AND PERSONNEL

Figure 29.5
ENVIRONMENT, HEALTH, SAFETY AND SECURITY ORGANIZATION AND PERSONNEL

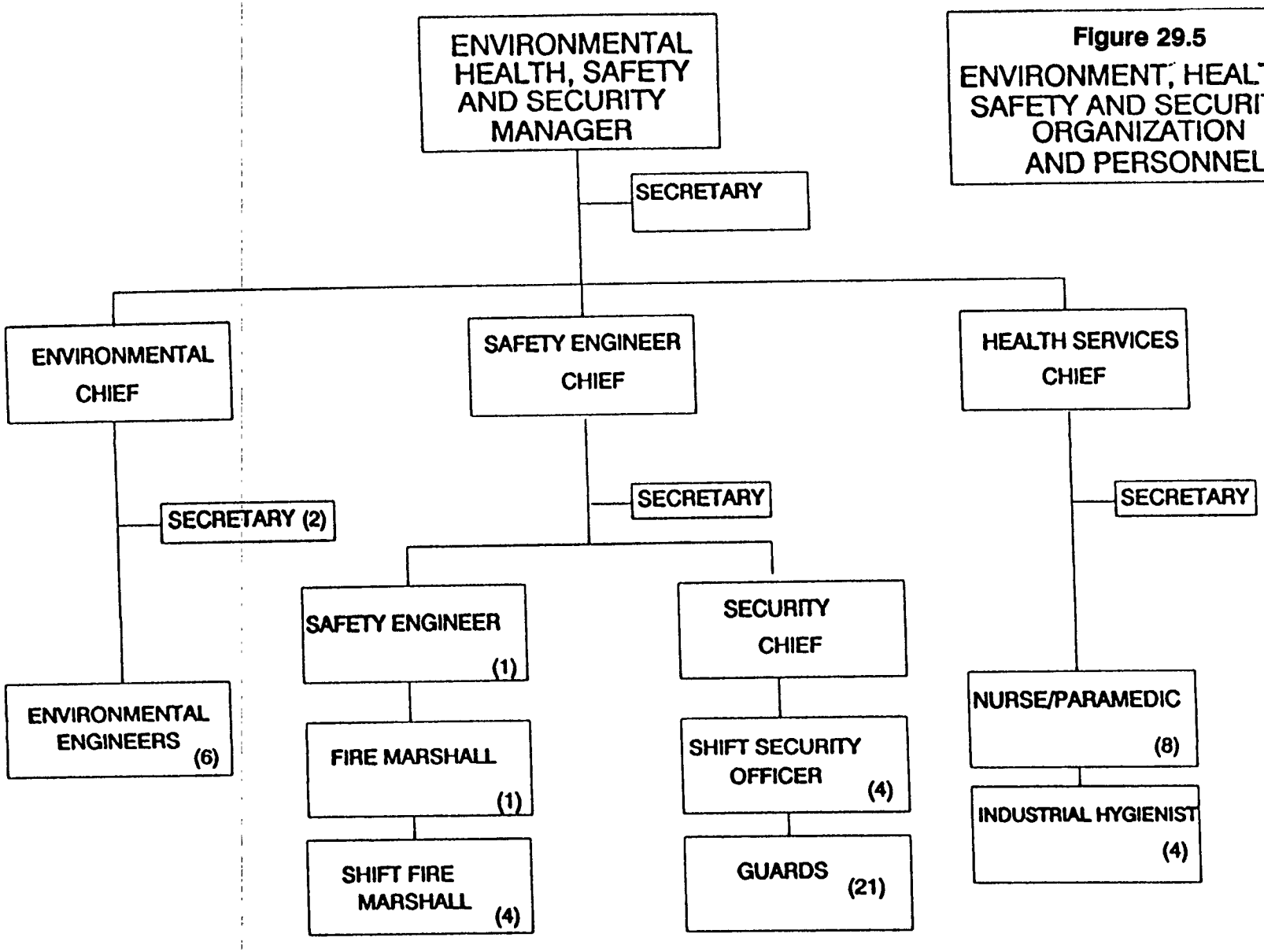

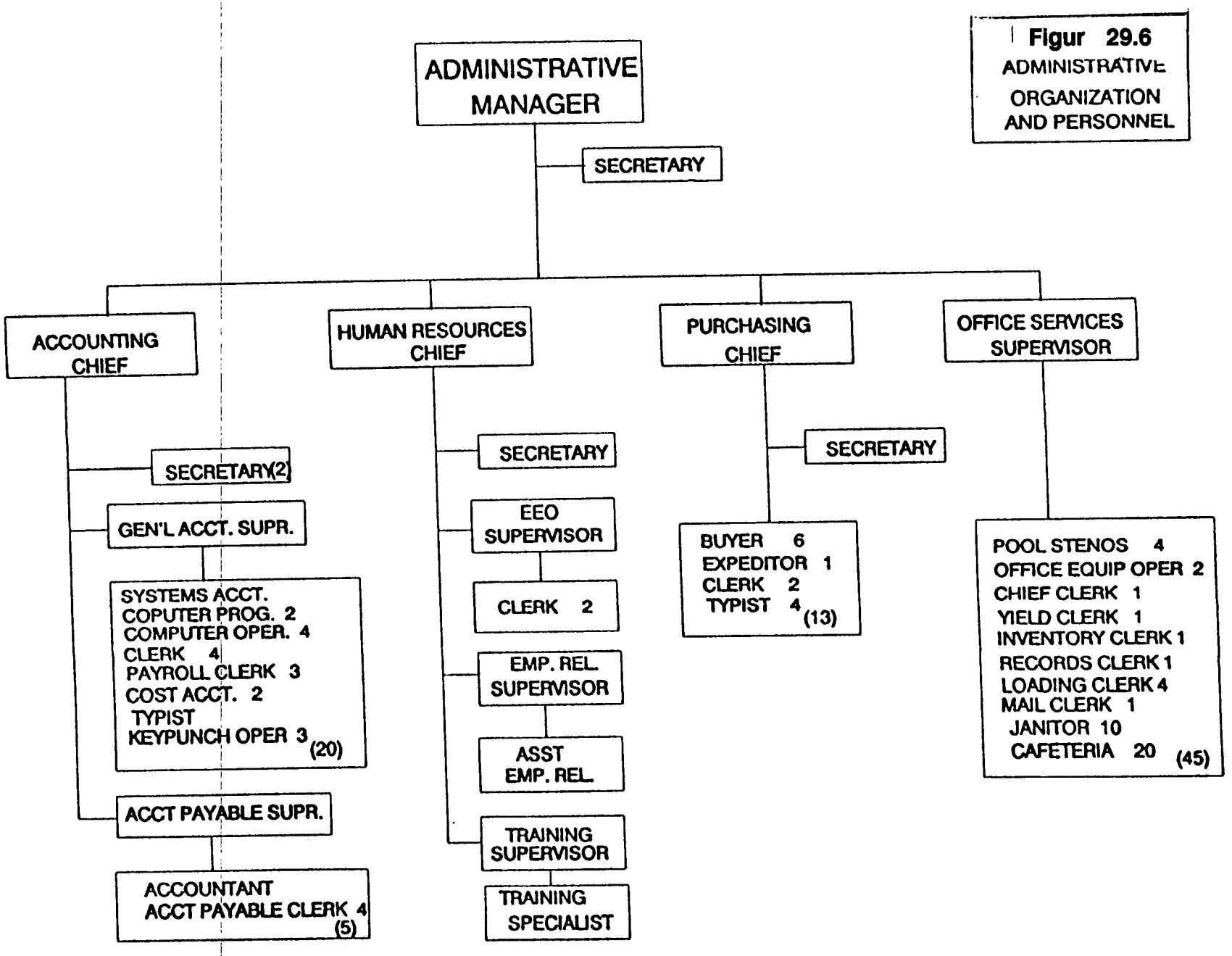

Figur 29.6
ADMINISTRATIVE ORGANIZATION AND PERSONNEL

29.2 Base Wages and Salaries

Base wages and salaries are shown in Table 29.1 below.

Table 29.1

Base Wages and Salaries

Category	Annual Salary Dollars
Plant Manager	84,600
Functional Manager	74,700
Shift Leader (Engineers/Chemists)	64,800
Area Supervisor	57,600
Area Engineers	50,400
Engineers	44,600
Adm. Secretary (Plant Manager)	24,300
Adm. Secretary (Functional Manager)	21,600
Secretary	19,400
Crafts	**Hourly Rate Dollars**
Insulators	20.91
Painters	17.37
Plumbers & Gas Fitters	17.28
Sheet Metal Worker	16.70
Steam Fitters	19.43
Boilermakers	19.03
Carpenters	17.47
Electricians	19.95
Masons	17.68

30. ECONOMICS

30. Economics

The economic analysis to determine the Crude Oil Equivalent price (COE) in $/bbl was carried out by using the LOTUS 1-2-3 based spreadsheet model developed by Amoco. There were several key assumptions made in carrying out this analysis.

30.1 LOTUS Spreadsheet Economics Model

The LOTUS spreadsheet economics model was developed to analyze the economics of various coal liquefaction process scenarios using the output generated by the ASPEN process simulation model. This economics model does detailed discounted cash flow calculations using the flowrates, utilities, labor, and total capital cost information generated by the ASPEN process simulation model and thereby it allows the user to study the sensitivities of various economic and technical parameters.

The LOTUS economics model is a two-dimensional spreadsheet model. The input and output flowrates, capital cost, number of operating personnel along with other user controlled input parameters drive the calculation of operating costs, capital costs, and revenue over the four year construction period and twenty-five year period of operation. These values are escalated as specified by user input parameters to generate a cash flow summary including the calculations of revenues, expenses, capital costs, depreciation, taxes, cash flow, internal rate of return, and net present value at a 15% internal rate of return.

In this model, the values of the major products (naphtha, distillates and gas oil) either can be specified by the user, or related to the price of crude oil by either a premium (multiplicative) factor or a delta (additive) factor. Thus, if the naphtha is worth 10% more than the reference crude oil, it is said to have a premium factor of 1.10. The volume weighted average premium factor for all the major syncrude products sometimes is called the syncrude premium factor. If a delta factor is used, it is sometimes called the margin. For example, if the reference crude oil price is 30.00 $/bbl and the naphtha value is 34.00 $/bbl, the naphtha is said to have a 4.00 $/bbl margin over crude. Thus, using either premium factors or margins, it is a simple matter to calculate the product revenues as a function of the reference crude oil price.

For this study, premium factors were used to relate the product values to that of the reference crude oil. These product premium factors were determined using a linear program (LP) model of an average midwest petroleum refinery to value the syncrude products. Although this is a rigorous calculation, there is some uncertainty in these values since they are dependent both upon the refinery configuration and the amount of syncrude that will be processed at that refinery. Consequently, additional LP model studies of specific refinery situations may be required to firm up these values as more information becomes available.

The cost calculations section of the model calculates and reports costs and revenues based on default or user specified year-by-year escalation factors. Separate escalation factors are included for general inflation, cost of construction, and the prices for coal, crude oil, and natural gas. The operating costs consist of variable operating costs (coal, chemicals, and utilities), and fixed operating costs (labor, sales, administration, research, taxes, maintenance, and insurance). Revenues are derived from the sale of the primary liquid hydrocarbon products (naphtha, distillates, and gas oil), and the by-products (liquid propane, mixed butanes, ammonia, sulfur, and mixed phenols).

The cash flow summary section of the model calculates total revenue (product revenues plus earned interest), total expenses (owner's, variable, fixed, and loan interest costs), gross income (total revenue minus total expenses), total capital costs (equity, sustaining capital, and working capital), imputed interest and depreciation of capital investments (according to 1986 Tax Reform Act and IRS Code #263A), taxable income (gross income plus imputed interest minus depreciation), state income tax on taxable income, federal income tax on taxable income minus state income tax credit, cash flow in each year, discrete rate of return, ad discrete net present value at a 15% discrete internal rate of return (IRR). The cash flow summary also contains totals of certain items to allow for verification of the calculations.

The project summary section of the model reports selected basis information and summarizes the spreadsheet calculation results. The basis information consists of base year, base year coal, natural gas, electricity and byproduct prices, total initial installed capital, and syncrude premium factor (I.e., the syncrude value relative to the reference crude oil value). The key calculated results are the discrete and continuous internal rates of return (IRR), the 15% IRR net present values, and the cost of production.

Since the model is set up to calculate product revenues as a function of the reference crude oil price, all results are a function of the assumed price of the reference crude oil when the project starts. For this project, the crude oil equivalent price (COE) is the assumed price of the reference crude oil at the project start when the project will produce a 15% internal rate of return on a discrete basis. Thus, the calculated COE and at a 15% discrete IRR, the project has a net present value of zero. At higher COEs (reference crude oil prices), the net present value will increase, and at lower COEs, the net present value will decrease and be negative.

The COE also may be interpreted as that reference crude oil price at which it would not matter to the petroleum refiner whether the purchases these syncrude products or the reference crude oil. In other words, he would make the same profit purchasing either the reference crude oil or the products from this coal liquefaction plant.

30.2 Key Assumpti ns

Project Start Date	January, 1994
Years of construction	4
Years of operation	25
Depreciation, Years	10
Maintenance, % initial capital	1
Working capital, % revenue	10
Working capital, % liquid	50
Owner's cost, % initial capital first year operation	5
Bank interest rate	8
Federal income tax rate, %	34
Percent equity	25
Percent IRR on equity	15
General inflation %	3
Raw material price escalation	same as general inflation of 3%
State Tax	0
SCP	1.07

30.3 Results

The results of the economic analysis are presented separately for the low rank coal cases with hydrogen production by coal gasification and hydrogen production by steam reforming. These results are shown in Tables 30.1 and 30.2, respectively. They were obtained at 15% IRR on equity. Each of these two tables have three sections. These are: 1) Model Input Section (based on overall plant material balance), 2) Input Data Relating to Key Assumptions, Construction, Schedules, and Feed And Product Costs, and 3) Results Summary.

As shown in Table 30.1, the low rank coal case with hydrogen production by coal gasification results in an equivalent crude oil price of $32.75/bbl. For the option where hydrogen is generated by natural gas reforming, the Crude Oil Equivalent price is $33.85/bbl (as shown in Table 30.2).

Tabl 30.1
Economic Analysis of Low Rank Coal Case
with Hydrogen Produced by Coal Gasification

M del Input (based on overall plant material balance)

ROM coal feed rate, MTSD[1]	24.951	
Coal cleaning refuse rate, MTSD[1]	0.0	
Ash production rate, MTSD[1]	1.664	
Natural Gas rate, MMMBTU/SD	109.783	
Electricity purchase, MEGA-WH/SD	0.00	
Raw water make-up, MMGSD	12.641	
Naphtha production, MBSD	12.916	
Light Distillate production, MBSD	6.633	
Heavy Distillate Production, MBSD	24.078	
Gas oil production, MBSD	21.358	
Liquid propane production, MBSD	4.182	
Mixed Butanes production, MBSD	2.246	
Ammonia production, MTSD[1]	0.167	
Phenol production, MTSD[1]	0.045	
Sulfur production, MTSD[1]	0.124	
Number of operators/boardmen	430	
Total installed capital, $MM (E-yr)	3692.1	4th quarter 1993

TABLE 30.1 - continued

Input data relating to key assumptions, c nstruction schedule, and feed and product costs

Total installed capital, $MM (base year)	3719.5
Operating Factor, percent	88.4
Percent plant operational, 1st yr.	100.0
Percent plant operational, 2nd yr.	100.0
Percent Plant operational, 3rd yr.	100.0
Refuse Disposal Cost, $/S-ton (base yr)	2.00
Ash Disposal cost, $S-ton (base yr)	5.00
Catalyst & Chemicals f(prod), $MM/MBSD (base yr)	1.23*
Operator pay rate, $/op./hr. (base yr)	18.50
Overhead factor (benefits, etc)	1.40
Other labor costs, $MM/yr (base yr)	14.27
Maintenance, taxes & insurance % init. cap.	1.00
Sales, Admin., Research, $MM/yr (base yr)	0.0
Percent capital 1st yr. construction	20.0
Percent capital 2nd yr. construction	30.0
Percent capital 3rd yr. construction	30.0
Percent capital 4th yr. construction	20.0
Working capital percent revenue	10.0
Percent liquid of working cap.	50.0
Owner's cost, % init. cap., 1st yr op.	5.00
ROM coal (MF) price, $/S-ton (base yr)	6.16
Natural gas price, $/MMBTU (base yr)	2.00
Electricity price, $/KWH (base yr)	0.050
Raw water, $/MGAL (base yr)	2.50
General inflation, percent/yr	3.00
Constr. cost index (CCI), %/yr	3.00
Coal escalation+, percent/yr	3.00
Crude oil escalation+, percent/yr	3.00
Natural gas escalation+, percent/yr	3.00
Naphtha syncrude prem.	1.07
Naphtha price, $BBL (base yr)	0.00
Light distillate syncrude prem.	1.04

TABLE 30.1 - continued

Light distillate price, $/BBL (base yr)	0.00
Heavy distillate syncrude prem	1.09
Heavy distillate price, $BBL (base yr)	0.00
Gas oil syncrude prem.	1.04
Gas oil price, $/BBL (base yr)	0.00
Liquid propane price, $/BBL (base yr)	12.29
Mixed butane price, $/BBL (base yr)	13.86
Ammonia price, $S-ton (base yr)	200.00
Mixed Phenol price, $/S-ton (base yr)	625.00
Sulfur price, $/short-ton (base yr)	47.30
Construction start = Jan 1 (base yr)	1994
Percent equity	25
Imputed interest rate, %/yr	0.00
Bank interest rate, percent/yr	8.00
Federal income tax rate, %/yr	34.00
State income tax rate, %/yr	0.00
Fixed cost, % init. cap. (0 = not used)	0.00
Term of loan, years (fixed)	10
Years of construction (fixed	4
Years of operation (fixed)	25
Depreciation, years (fixed)	10

Result Summary

Base year	1994
Total Capital	$3719.5 MM
Syn Crude Premium	1.07
Crude Oil Equivalent (PADD II)	32.75 $/BBL (base yr)

(1) Rates are in 1000 short tons per stream day

Note:

M= 1000X
MM = 1000 X M
MMM = 1000 X MM

* Calculated value
\+ Inflation included

Table 30.2
Economic Analysis of Low Rank Coal
with Hydrogen Produced by Steam Reforming

Model Input (based on overall plant material balance)

ROM coal feed rate, MTSD[1]	17.929
Coal cleaning refuse rate, MTSD[1]	0.0
Ash production rate, MTSD[1]	1.38
Natural Gas rate, MMMBTU/SD	321.052
Electricity purchase, MEGA-WH/SD	0.0
Raw water make-up, MMGSD	12.725
Naphtha production, MBSD	12.916
Light Distillate production, MBSD	6.633
Heavy Distillate Production, MBSD	24.078
Gas oil production, MBSD	21.358
Liquid propane production, MBSD	4.182
Mixed Butanes production, MBSD	2.246
Ammonia + oxygen production, MTSD[1]	0.167
Phenol production, MTSD[1]	0.045
Sulfur production, MTSD[1]	0.37
Number of operators/boardmen	328
Total installed capital, $MM (E-yr)	3041.9 4th quarter 1993

TABLE 30.2 - continued

Input data relating to key assumptions, construction schedule, and feed and product costs

Total installed capital, $MM (base year)	3064.5
Operating Factor, percent	88.4
Percent plant operational, 1st yr.	100.0
Percent plant operational, 2nd yr.	100.0
Percent Plant operational, 3rd yr.	100.0
Refuse Disposal Cost, $/S-ton (base yr)	2.00
Ash Disposal cost, $S-ton (base yr)	5.00
Catalyst & Chemicals, f(prod), $MM/MBSD (base yr)	1.23*
Operator pay rate, $/op./hr. (base yr)	18.50
Overhead factor (benefits, etc)	1.40
Other labor costs, $MM/yr (base yr)	14.27
Maintenance, taxes & insurance % init. cap.	1.00
Sales, Admin., Research, $MM/yr (base yr)	0.00
Percent capital 1st yr. construction	20.0
Percent capital 2nd yr. construction	30.0
Percent capital 3rd yr. construction	30.0
Percent capital 4th yr. construction	20.0
Working capital percent revenue	10.0
Percent liquid of working cap.	50.0
Owner's cost, % init. cap., 1st yr op.	5.00
ROM coal (MF) price, $/S-ton (base yr)	6.16
Nat. gas price, $/MMBTU (base yr)	2.00
Electricity price, $/KWH (base yr)	0.050
Raw water, $/MGAL (base yr)	2.50
General inflation, percent/yr	3.00
Constr. cost index (CCI), %/yr	3.00
Coal escalation+, percent/yr	3.00
Crude oil escalation+, percent/yr	3.00
Natural gas escalation+, percent/yr	3.00
Naphtha syncrude prem.	1.07
Naphtha price, $BBL (base yr)	0.00
Light distillate syncrude premium	1.04

TABLE 30.2 - continued

Light distillate price, $/BBL (base yr)	0.00
Heavy distillate syncrude prem	1.09
Heavy distillate price, $BBL (base yr)	0.00
Gas oil syncrude prem.	1.04
Gas oil price, $/BBL (base yr)	0.00
Liquid propane price, $/BBL (base yr)	12.29
Mixed butane price, $/BBL (base yr)	13.86
Ammonia price, $S-ton (base yr)	200.00
Mixed Phenol price, $/S-ton (base yr)	625.00
Sulfur price, $/short-ton (base yr)	47.30
Construction start = Jan 1 (base yr)	1994
Percent Equity	25
Imputed interest rate %/yr	0.00
Bank interest rate, percent/yr	8.00
Federal income tax rate, %/yr	34.00
State income tax rate, %/yr	0.00
Fixed Cost, % initial capital (0 = not used)	0.00
Term of loan, years (fixed)	10
Years of construction (fixed	4
Years of operation (fixed)	25
Depreciation, years (fixed)	10

R sult Summary

Base year	1994
Total Capital	$3064.5 MM
Syn Crude Premium	1.07
Crude Oil Equivalent (PADD II)	33.85 $/BBL (base yr)

(1) Rates are in 1000 short tons per stream day

Note:

M= 1000X
MM = 1000 X M
MMM = 1000 X MM

* Calculated value
\+ Inflation included

30.4 Sensitivities n Economics

The sensitivity analysis on economics was done to determine the impact of changes in capital, raw material, owner's equity, price escalation (per EIA) on coal, natural gas and crude oil, and syncrude premium, respectively. Results of this analysis are given in Table 30.3.

Table 30.3
Economic Results and Sensitivities

ECONOMICS	
Low Rank Coal	$32.75/bbl

SENSITIVITIES		
Item	**Change**	**Δ $/bbl**
• Capital	± 10%	± 2.35
	± 25%	± 6.10
• Raw Material		
Coal	± 25%	± 0.55
Natural Gas	± 25%	± 0.70
• Owner's Equity	± 100%	± 3.68
• Price Escalation, per EIA		
Coal	+1.6%	- 7.84
Natural Gas	+3.5%	
Crude oil	+2.9%	
• Syncrude Premium	+0.20	- 5.14
• Low Rank Coal with H_2 production from natural gas		+1.10

As shown in this table, a change in capital cost by 10% changes the Crude Oil Equivalent price by $2.35/bbl and a 25% change causes a change of $6.10/bbl for the Crude Oil Equivalent price. A 25% change in coal and natural gas price individually changes the Crude Oil Equivalent price by $0.55/bbl and $0.70/bbl respectively.

The increase of owner's equity by 100% (25% to 50%) increases the Crude Oil Equivalent price by $3.68/bbl.

When coal, natural gas and crude oil are individually allowed to escalate per EIA, instead of at the fixed rate of 3% (inflation), the equivalent crude oil price decreases by 7.84/bbl. It is worthwhile to note that the EIA escalations for coal, natural gas and crude oil listed in Table 30.3 are price escalations in addition to the background inflation of 3% (assumed). In other words, the net escalation for these feeds are 4.6%, 6.5% and 5.9%. The increase in syncrude premium to 1.27 results in a drop of the Crude Oil Equivalent price by $5.14/bbl.

In order to test out the effect of inflation rate on 'COE' a sensitivity study was conducted on the various level of inflation, starting from 0% to a maximum of 3% per year with 1% increment. In previous calculations of 15% IRR on equity, the calculation includes 3% yearly inflation.

Table 30.4

Rate of Inflation Sensitivities on Economic Results

Rate of Inflation % per year	COE $ per bbl
O	39.10
1	36.85
2	34.75
3	32.75

31. DISCUSSION

31. Discussion

The study results presented in the various sections of this report are for a low rank coal from the Black Thunder Mine subbituminous coal from the Powder Basin located in Gillette, Wyoming. The pilot plant work was conducted at the Advanced Coal Liquefaction Research Facility in Wilsonville, Alabama (runs 262E and 263J). Two cases were investigated for hydrogen production. These are: hydrogen production by coal gasification and hydrogen production by steam reforming of natural gas (Option 6). The precision and accuracy of the economic evaluation are all subject to the scope and constraints of the study and the assumptions made during its execution. A list of assumptions were followed during the economic evaluation and they were the same for both cases. These assumptions are included in Section 30 of this report. Besides them there are a number of common inherent limitations for both cases of the study. Some of these common limitations are discussed below:

- Capital cost estimates were made with an accuracy of ± 30%. This level of accuracy in cost estimates did not require a detailed engineering of plants.

- Capital cost estimates were based on the "Nth plant" concept and the plant operating factor were assumed to be the same as the "First plant"of the baseline design. The "Nth plant" assumes that the technology for direct liquefaction of coal is a mature technology and that there are many similar plants already constructed and operating. Therefore, the uncertainties regarding engineering, construction and operability of a "Nth plant" are at a minimal level. No spare train for any plant was included in the design and capital cost estimates.

  The valuation of the various product streams was achieved by introducing syncrude premium factor (SCP) which relates the coal liquefaction plant product values to a typical crude oil. Although SCP was determined in a rigorous manner using the Bechtel proprietary linear programming (LP) refinery model, PIMS, this is not an exact number. For this study the SCP was kept the same as that of the baseline.

Although the above mentioned limitations are inherent for both cases (low rank coal case and the baseline Illinois coal case), comparisons of the results of the economic evaluation on relative basis should be reasonably accurate.

With reference to ASPEN PLUS modeling and modeling tools, the modeling package developed for the two low rank coal cases is an extension of what was developed for the baseline and improved baseline. The modeling package developed for this study should be considered as a research guidance tool, and not a detailed process design tool. It was designed only to predict the effects of various process and operation changes on the overall plant material and utility balances, operating labor, and capital costs.

Comparison of the model predictions for various feed and product rates for the ISBL plants as well as the capital costs for each ISBL plant with the corresponding numbers obtained during design and cost estimating are shown in Tables 25.1 and 25.2 of this

report. Table 25.1 compares such results for the case with hydrogen by coal gasification whereas Table 25.2 shows the comparison for the case with hydrogen production by steam reforming of natural gas option. These comparisons demonstrate that the model predicts reasonably well the capital costs of each ISBL plants as well as the feed and product flow rates of each ISBL plants.

The results show that for the same internal rate of return (15%) the Crude Oil Equivalent (COE) price is lower for the case with hydrogen production by coal gasification ($32.75) as compared to price for the case with hydrogen by steam reforming ($33.85).

In conclusion there is no economic incentive to produce hydrogen by natural gas reforming for this particular low rank coal cases, particularly in light of the natural gas price ($2.00/mmBtu) assumed for this study. Therefore, it is recommended that some of the options which were investigated during the baseline study should be reexamined within the context of this study. Another recommendation is to carry out a similar economic study considering total integration of the coal liquefaction plant with an existing refinery.

32. REFERENCES

32. References

1. Lumpkin, R. E., "Recent Progress in The Direct Liquefaction of Coal", Science, pp 873-877, Volume 239, February 19, 1988.

2. Basu, A., J. G. Masin, and N. C. Stewart, "Improvements in The Cost of Liquid Fuels from Direct Coal Liquefaction", 7th Annual International Pittsburgh Coal Conference, September 10-14, 1990, Pittsburgh, Pennsylvania.

3. Basu, A., and J. G. Masin, "Incentives for Close-Coupled Coal Liquefaction and Fixed-Bed Hydrotreating", Presentation at Wilsonville Technical Review Meeting, May 8-9, 1991.

4. Lumpkin, R. E., "Direct Coal Liquefaction Status and Direction", Proceedings, Eighth Annual International Pittsburgh Coal Conference, pp. 741-746, October 14-18, 1991.

5. Poddar, S. K., A. Basu and S. J. Kramer, "A Baseline Design Study on Two Stage Direct Coal Liquefaction," Pittsburgh Coal Conference, Pittsburgh, PA., October 14-18, 1991.

6. Poddar, S. K., S. N. Habash, S. J. Kramer, A. Basu and A. Schachtschneider, "Baseline Design and System Analysis for Direct Coal Liquefaction - Capital Cost and Economics," DOE Liquefaction Contractors' Review Conference, Pittsburgh, Pa., September 22-24, 1992

7. Poddar, S. K., S. N. Habash, S. J. Kramer, A. Basu and T. E. Myers, "Capital Costs and Economics of the Two Stage Direct Coal Liquefaction Plant," Pittsburgh Coal Conference, Pittsburgh, Pa., October 12-16, 1992.

8. Poddar, S. K., "Economics of Two Stage Catalytic Direct Liquefaction of Coal", AIST-NEDO/DOE-PETC Joint Technical Meeting, San Francisco, October 11-14, 1992.

9. Kramer, S. J. and S. K. Poddar, "Economics of Coal Cleaning on Direct Coal Liquefaction," DOE Direct Liquefaction Workshop, Pittsburgh, Pa., September 27, 1993.

10. Poddar, S.K., S. J. Kramer and A. Basu, "Direct Coal Liquefaction-Capital Cost and Economics for Improved Baseline Design", Proceedings, Contractors' Review Conference, pp. 333-352, September 27-29, 1993.

11. Poddar, S. K., "Direct Liquefaction of Coal - Past, Present and Future", USDOE-PETC-JNEDO Technical Exchange Meeting, Sapporo, Japan, January 17-21, 1994.

12. Poddar, S. K., and E. S. Resurreccion, "Valuation of Coal Liquids as Refinery Feedstocks Using Linear Programming Tool (PIMS), Symposium on Alternate Routes for the Production of Fuels", 208th ACS National Meeting, Washington, D.C., Preprint, Division of Fuel Chemistry, American Chemical Society, pp. 1210-1213, Vol. 39, No. 4, August 20-25, 1994.

13. Poddar, S. K., P. Adler and S. J. Kramer, "Direct Coal Liquefaction - Capital Cost and Economics for Low Rank Coal," DOE Coal Liquefaction and Gas Conversion Contractors' Review Conference, Pittsburgh, Pa., September 7-8, 1994.

14. Poddar, S. K., "Economics of Direct Liquefaction of Subbituminous Coal from Black Thunder Mine", DOE/PETC/AIST-NEDO Joint Technical Meeting on Coal Liquefaction, Albuquerque, New Mexico, September 26-30, 1994.