APPENDIX B:
CARBON DIOXIDE CAPTURE TECHNOLOGY SHEETS

PRE-COMBUSTION SOLVENTS

PRE-COMBUSTION SORBENTS

PRE-COMBUSTION MEMBRANES

POST-COMBUSTION SOLVENTS

POST-COMBUSTION SORBENTS

POST-COMBUSTION MEMBRANES

OXY-COMBUSTION

OXYGEN PRODUCTION

CHEMICAL LOOPING

ADVANCED COMPRESSION

R&D COLLABORATIONS

TABLE OF CONTENTS

PRE-COMBUSTION SOLVENTS B-6

SRI International – CO_2 Capture Using AC-ABC Processt B-7

PRE-COMBUSTION SORBENTS B-14

TDA Research – CO_2 Capture for Low-Rank Coal IGCC Systems B-15
URS Group – Sorbent Development for WGS B-18
Air Products and Chemicals – Advanced Acid Gas Separation B-24
TDA Research – High-Capacity Regenerable Sorbent B-27
Ohio State University-Department of Chemical Engineering – Calcium Looping for Hydrogen Production B-33
University of North Dakota Energy and Environmental Research Center – Hydrogen Production and Purification B-38
Research Triangle Institute – Warm Gas Cleanup B-40
Lehigh University – Sorption Enhance Reaction Process B-44
University of North Dakota Energy and Environmental Research Center – Sorbent Enhanced Water-Gas Shift B-49
University of North Dakota Energy and Environmental Research Center – High-Density Active Carbon B-52

PRE-COMBUSTION MEMBRANES B-56

Praxair – Membrane for H_2 Separation B-57
Eltron Research & Development – Hydrogen Transport Metal Alloy Membranes for IGCC-CCS B-61
Worcester Polytechnic Institute – Pd – Pd/Alloy Composite Membrane for H_2 Separation B-66
Pall Corporation – Pd-Alloys for Optimum Sulfur/Carbon Resistance B-75
Los Alamos National Laboratory – High-Temperature, Polymer-Based Membrane B-79
Arizona State University – Dual-Phase Ceramic-Carbonate Membrane Reactor B-85
Colorado School of Mines – Nanoporous Metal Carbide Membrane for H_2 Separation B-89
Southwest Research Institute (SwRI) – Amorphous Alloy Membrane for H_2 Separation B-94
University of Minnesota – Hydrogen-Selective Zeolite Membranes B-98
University of Texas, Dallas – Non-Precious Metal Membranes for Hydrogen Separation B-102
Worcester Polytechnic Institute – Supported Molten Metal Membranes B-109
University of Wyoming Research Corporation – Integrated WGS Membrane B-114
University of North Dakota – Composite Polymer Membrane B-117
New Jersey Institute of Technology – Pressure Swing Absorption Device and Process B-120
University of Nevada, Reno, Dept. of Chemical and Materials Engineering – Amorphous Alloy Membranes for H_2 Separation B-125
Ceramatec – Ceramic Membrane for H_2 Separation B-134
United Technologies Research Center – Membrane for H_2 Separation B-137
Media and Process Technology – Carbon Molecular-Sieve Membranes B-142
Gas Technology Institute – Nanoporous, Superhydrophobic Membrane Contactor Process B-147
SRI International – High-Temperature Polymeric Membranes B-151
Membrane Technology & Research, Inc. (MTR) – Polymer Membrane Process Development B-158
Grambling State University – Catalysts for Use in Membrane Reactors B-164
Southwest Research Institute – Ternary Palladium Alloy Membranes B-172
United Technologies Research Center – Palladium-Copper Trimetallic Alloy B-176
REB Research & Consulting – High Flux Metallic Membranes and Reactors B-181
UNDEERC – Pilot Testing of H_2/CO_2 Separation Membranes B-185
Western Research Institute – Integrated Structural WGS Catalyst with V-Pd Alloy Membrane B-188
North Carolina A&T State University – Palladium/Silver Composite Membrane B-191
Las Alamos National Laboratory (LANL) – Palladium-Based Membrane Reactor B-195
University of Texas at Dallas – Mixed-Matrix Membranes for H_2/CO_2 Separations B-198

POST-COMBUSTION SOLVENTS B-202

Southern Company – Waste Heat Integration B-203
University of Kentucky – Slipstream Demonstration Using the Hitachi Advanced Solvent B-206
Linde – Slipstream Novel Amine-Based Post-Combustion Process B-211
Novozymes – Enzyme and Ultrasonic Combination Technology B-216
Neumann Systems Group – Carbon Absorber Retrofit Equipment B-220
William Marsh Rice University – Hybrid Absorption/Stripper Process B-227
Carbon Capture Scientific – Gas-Pressurized Stripping B-230
Battelle Memorial Institute – CO_2BOLs with Polarity-Swing-Assisted Regeneration B-235
University of Illinois at Urbana-Champaign – Hot Carbonate Absorption with Crystallization-Enabled High-Pressure Stripping B-240
GE Global Research – Novel Aminosilicone Solvent B-246
ION Engineering – Advanced Solvent B-251
URS Group – Piperazine Solvent with Flash Regeneration B-255
Akermin – Carbonic Anhydrase-Potassium Carbonate Mixture B-261
Lawrence Berkeley National Laboratory (LBNL) – Chemical Additives for CO_2 Capture B-266
Babcock & Wilcox – Optimized Solvent Formulation B-271
3H Company – CO_2 Capture with Self-Concentrating Amine Absorbent B-274
University of Notre Dame – Ionic Liquids B-277
Illinois State Geological Survey – Novel Integrated Vacuum Carbonate Process B-284
Siemens Energy – POSTCAP Capture and Separation B-290
Georgia Tech Research Corporation – Reversible Ionic Liquids B-293
Hampton University – Phase Transitional Absorption B-298

POST-COMBUSTION SORBENTS B-302

WR Grace – Rapid Pressure Swing Adsorption B-303
RTI International – Advanced Solid Sorbents and Processes for CO_2 Capture B-311
ADA-ES – Solid Sorbents as Retrofit Technology B-316
The Georgia Institute of Technology – Rapid-Temperature Swing Adsorption B-326
TDA Research – Low-Cost, High-Capacity Regenerable Sorbent B-332
University of North Dakota – Solid Sorbent-Based CO_2 Capture B-337
InnoSepra – Novel Adsorption Process B-341
SRI International – Novel Solid Sorbents B-346
TDA Research – Low-Cost Solid Sorbent B-351
University of Akron – Metal Monolithic Amine-Grafted Zeolites B-355
RTI International – CO_2 Removal from Flue Gas Using Microporous MOFs B-360
RTI International – A Dry Sorbent-Based Post Combustion CO_2 Capture B-366

POST-COMBUSTION MEMBRANES B-370

FuelCell Energy – Electrochemical Membrane B-371
Ohio State University – Inorganic/Polymer Composite Membrane B-376
Membrane Technology & Research Inc. – Polymeric Membranes B-381
General Electric Global Research Center – Composite Hollow Fiber Membranes B-388
Membrane Technology & Research, Inc. – Low-Pressure Membrane Contactors (Mega-Module) B-392
Gas Technology Institute – Hybrid Membrane/Absorption Process B-396
American Air Liquide – Low-Temperature Membrane B-401
Argonne National Laboratory – Dense High Temperature Ceramic Membranes B-406
Research Triangle Institute – Hollow-Fiber, Polymeric Membrane B-410
Carbozyme – Biomimetic Membrane B-416
University of New Mexico – Dual Functional, Silica-Based Membrane B-420

TABLE OF CONTENTS

OXY-COMBUSTION B-424

Praxair – Oxygen Transport Membrane-Based Syngas Production B-425
Alstom Power – Tangentially Fired Oxy-Combustion Boilers B-430
Argonne National Laboratory – Analysis of CCS Technology Adoption B-436
Aerojet Rocketdyne – Pressurized Fluidized Bed Combustor Development B-438
Gas Technology Institute (GTI) – High Efficiency Molten-Bed Oxy-Combustion B-441
Reaction Engineering International – Characterization of Oxy-Combustion Impacts B-443
Southwest Research Institute – Supercritical CO_2 Power Cycle B-450
Unity Power Alliance – Pressurized Oxy-Combustion with Flameless Reactor B-453
Washington University – Staged, High-Pressure Oxy-Combustion B-455
University of Utah – Simulation and Modeling for Oxy-Combustion and Chemical Looping B-457
Clean Energy Systems – Oxy-Syngas Combustor and Turbine B-462
Jupiter Oxygen Corporation – Oxy-Combustion and IPR B-467
Praxair, Inc. – Tonawanda, NY – Near-Zero Emission Flue Gas Purification B-471
Foster Wheeler – Boiler Materials for Oxy-Combustion B-475
Babcock & Wilcox Power Generation Group – Oxy-Combustion Design for Retrofits B-479
Air Products and Chemicals – Flue Gas Purification B-483
Southern Research Institute – Evaluation of Gas Recycle for Oxy-Combustion B-486
Natural Resources Canada-CanmetENERGY – Engineering Assessment of Oxy-Combustion B-490
Washington University – Multi-Pollutant Control B-494
Brigham Young University – Nitrogen behavior in Oxy-Combustion B-497

OXYGEN PRODUCTION B-500

Air Products and Chemicals – ITM O_2 Technology B-501
North Carolina A&T State University – Nanofiller Oxygen Membranes B-506
Eltron Research – Materials for Oxygen Separation B-508
TDA Research – Sorbents for Air Separation B-511
The BOC Group, Inc, now Linde – Low-Cost Oxygen Supply B-513

CHEMICAL LOOPING B-516

Alstom Power – Chemical Looping Combustion Technology B-517
Babcock & Wilcox – Iron-Based Coal Direct Chemical Looping B-520
Ohio State University – Coal-Direct Chemical Looping for Retrofits B-523
University of Florida – Magnetically Fluidized Chemical Looping B-526
University of Kentucky – Solid-Fueled Pressurized Chemical Looping B-530
Western Kentucky University – Novel CLC Oxygen Carriers B-533
Alstom Power — Chemical Looping Simulation and Control B-536

ADVANCED COMPRESSION B-540

Southwest Research Institute — Evaluation of Compression Efficiency Improvements B-541
Lehigh University — Thermal Integration of CO_2 Compression B-547
Ramgen Power Systems — Shock Wave Compression B-550

R&D COLLABORATIONS B-556

University of North Dakota Energy & Environmental Research Center (UNDEERC) – Partnership for CO_2 Capture B-557

this page intentionally left blank

APPENDIX B: CARBON DIOXIDE CAPTURE TECHNOLOGY SHEETS

PRE-COMBUSTION SOLVENTS

CO_2 CAPTURE FROM IGCC GAS STREAMS USING AC-ABC PROCESS

primary project goals

SRI International is developing, for integrated gasification combined cycle (IGCC)-based power plants, a carbon dioxide (CO_2) capture technology based on the use of a high-capacity and low-cost aqueous ammoniated solution containing ammonium carbonate (AC), which reacts with CO_2 to form ammonium bicarbonate (ABC).

technical goals

- Test the technology on a bench-scale batch reactor to validate the concept.
- Determine the optimum operating conditions for a small pilot-scale reactor.
- Design and build a small pilot-scale reactor capable of continuous integrated operation.
- Perform pilot-scale tests to evaluate the process in a coal gasifier environment.
- Perform a technical and economic evaluation on the technology.

technical content

The technology is based on the use of an aqueous ammoniated solution containing AC, which reacts with CO_2 to form ABC.

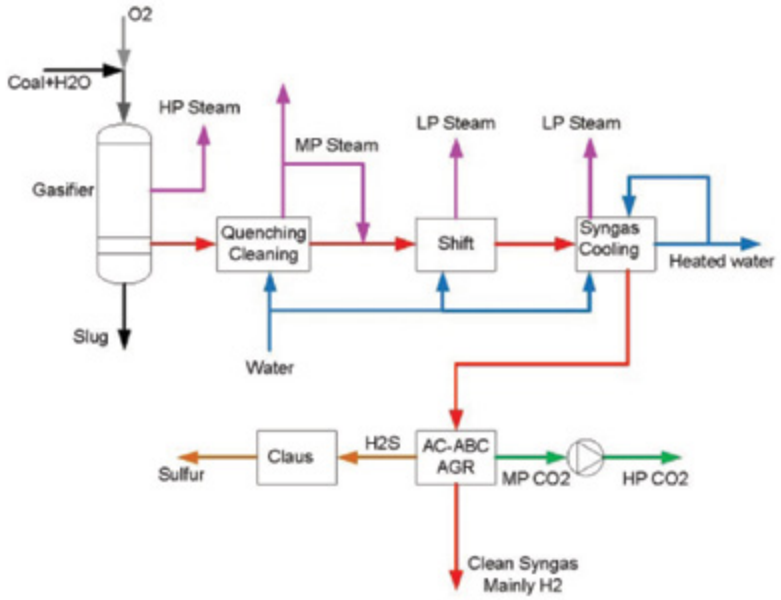

Figure 1: Acid Gas Removal in Gasification System

The concentrated ammoniated solution is used to capture CO_2 and hydrogen sulfide (H_2S) from synthesis gas (syngas) at high pressure. This technique reduces the size of the CO_2 stripper and operates at high pressure, reducing CO_2 compression needs; both reduce electric power consumption. AC has high net CO_2 loading, is a low-cost and readily

technology maturity:

Pilot-Scale Using Actual Syngas

project focus:

CO_2 Capture Using AC-ABC Process

participant:

SRI International

project number:

FE-0000896

NETL project manager:

Elaine Everitt
elaine.everitt@netl.doe.gov

principal investigator:

Gopala Krishnan
SRI International
gopala.krishnan@sri.com

partners:

EIG, Inc.
Bechtel Hydrocarbon Technology Solutions, Inc.
National Carbon Capture Center

performance period:

9/30/09 – 12/31/13

available reagent, and requires little solvent makeup; the solubility of hydrogen (H_2), carbon monoxide (CO), and methane (CH_4) in absorber solution is extremely low.

The project, in its first phase, constructed a bench-scale batch reactor unit to test the technology at SRI's facility in California. Testing was performed to validate the concept and to determine the optimum operating conditions.

Absorber testing was conducted to first determine the solubility of shifted-gas components (H_2, CO, nitrogen [N_2], argon [Ar]), then to determine the reactivity of CO_2 and H_2S; mixed-gas testing was performed to determine the relative reaction kinetics.

Regenerator testing was conducted to determine CO_2 and H_2S release characteristics, as well as the relative kinetics of CO_2 and H_2S release. Optimal operating conditions derived in bench-scale testing will be used at the pilot-scale test.

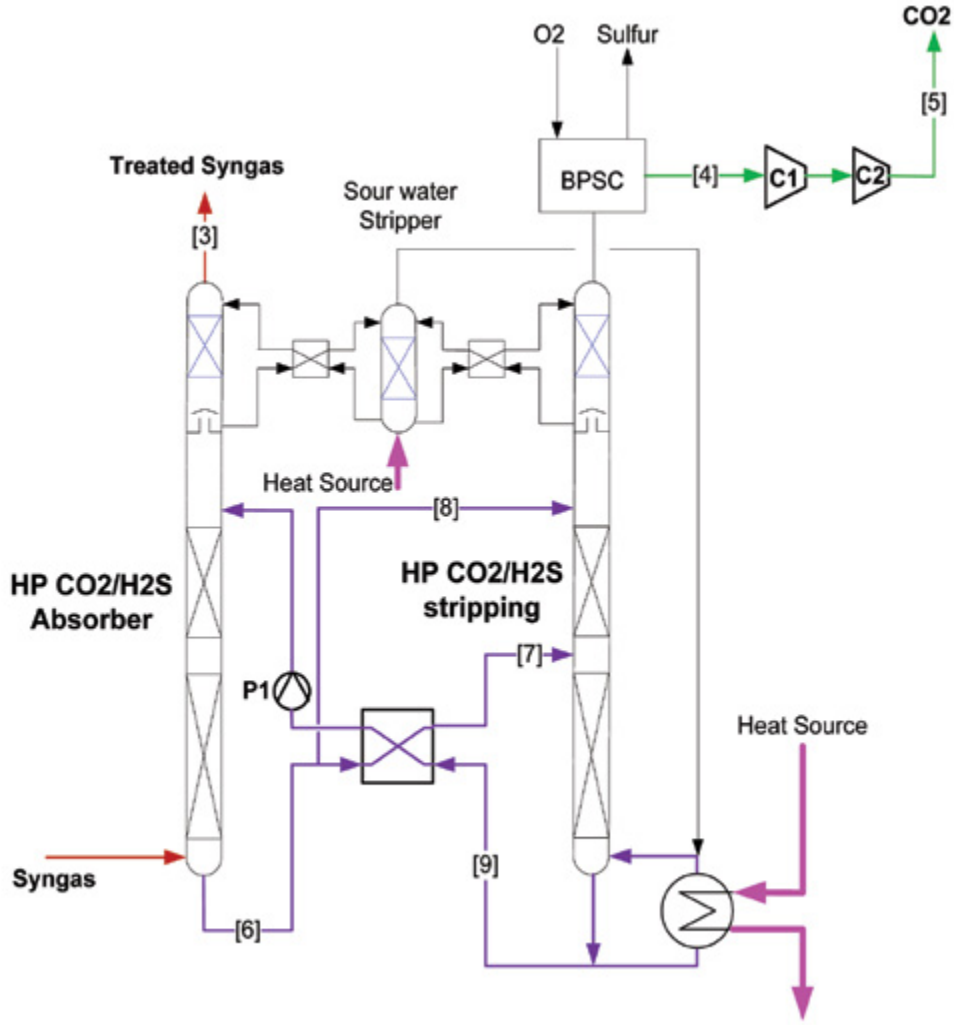

Figure 2: Schematic of the CO_2 and H_2S Capture System

Pilot-scale testing will be performed on a slipstream from the air-blown gasifier at the National Carbon Capture Center (NCCC) in Wilsonville, Alabama. SRI has designed a pilot-scale, continuous, integrated test system. The equipment is being procured and will be assembled. The pilot-scale test will emphasize stability of integrated operation. The effects of trace contaminants will be observed, as the pilot tests will use a gas stream from an operating gasifier that has undergone minimum cleanup and will contain trace contaminants.

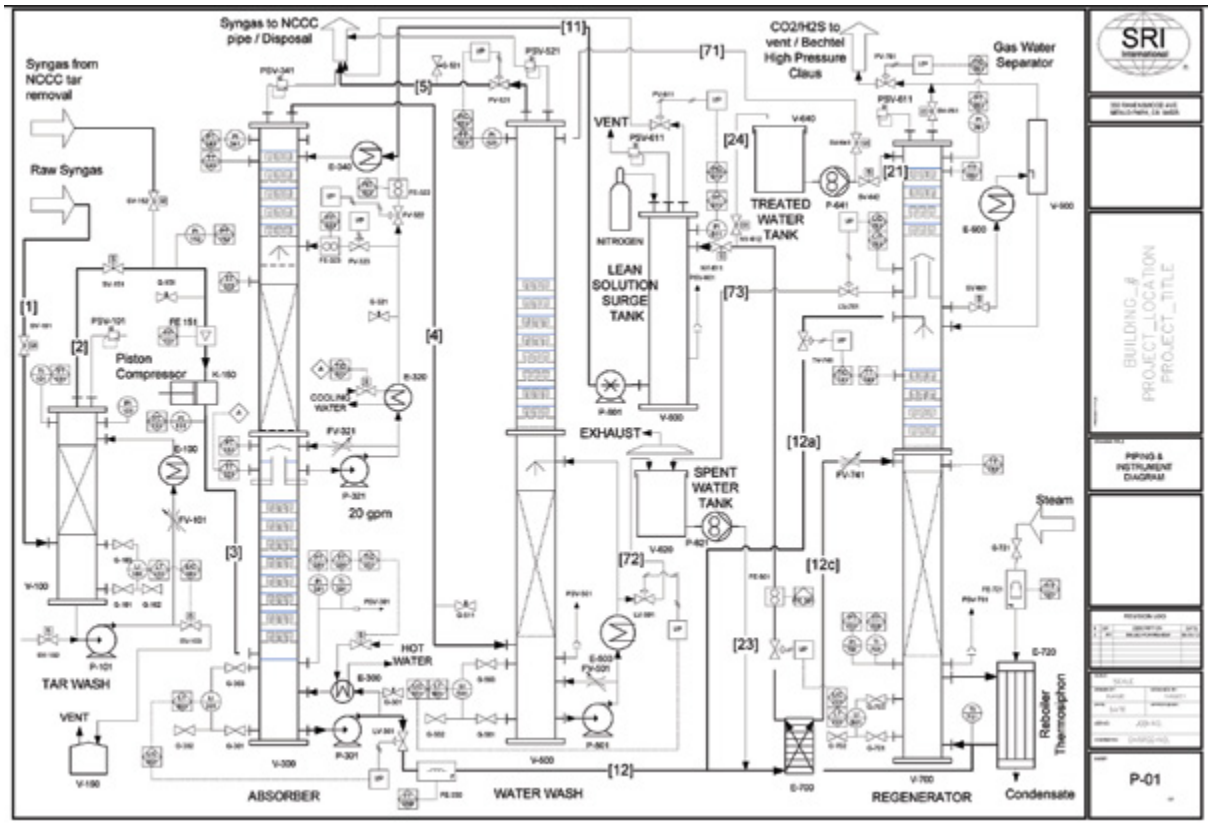

Figure 3: Pilot-Scale Integrated Testing (Preliminary)

A technical and economic analysis was performed using Aspen and GT-Pro programs to generate the equipment sizing and heat and material flows; DOE cost models; and a base case, 750-MW nominal IGCC plant without CO_2 capture to compare the AC-ABC process with a similar-size plant using CO_2 capture with a Selexol subsystem.

TABLE 1: SOLVENT PARAMETERS

	Units	Current R&D Value	Target R&D Value
Pure Solvents			
Molecular Weight	mol^{-1}	Nominal 18	Nominal 18
Normal Boiling Point	°C	Varies with pressure: 100°C at 1 atm	Varies with pressure: 100°C at 1 atm
Normal Freezing Point	°C	Nominal 0°C, varies with composition	Nominal 0°C, varies with composition
Vapor Pressure @ 15°C	bar	NH_3 vapor pressure varies with composition and temperature,	NH_3 vapor pressure varies with composition and temperature
Manufacturing Cost for Solvent	$/kg		Cost of anhydrous ammonia typically $200 to $400/ton
Working Solution			
Concentration	kg/kg	0.1 kg NH_3/kg	0.15 kg NH_3/kg
Specific Gravity (15°C/15°C)	-	1.1	1.1
Specific Heat Capacity @ STP	kJ/kg-K	3.5	3.5
Viscosity @ STP	cP	Nominal 1	Nominal 1

TABLE 1: SOLVENT PARAMETERS

	Units	Current R&D Value	Target R&D Value
Adsorption			
Pressure	bar	20	50
Temperature	°C	25	25 – 40
Equilibrium CO_2 Loading	mol/mol	Varies with the composition of the solution;	Varies with the composition of the solution
Heat of Absorption	kJ/mol CO_2		40 to 60
Solution Viscosity	cP	Nominal 1	Nominal 1
Desorption			
Pressure	bar	30	30
Temperature	°C	<200°C	
Equilibrium CO_2 Loading	mol/mol	Varies with the composition of the solution	Varies with the composition of the solution
Heat of Desorption	kJ/mol CO_2		40 to 60
Proposed Module Design		*(for equipment developers)*	
Flue Gas Flowrate	kg/hr	225	N/A
CO_2 Recovery, Purity, and Pressure	percent / percent / bar	90 percent, 99 percent, 30 bar	
Absorber Pressure Drop	bar	<1 bar	
Estimated Absorber/Stripper Cost of Manufacturing and Installation	$ / kg/hr		

Definitions:

STP – Standard Temperature and Pressure (15°C, 1 atm).

Pure Solvent – Chemical agent(s), working alone or as a component of a working solution, responsible for enhanced CO_2 absorption (e.g., the amine monoethanolamine [MEA] in an aqueous solution).

Manufacturing Cost for Solvent – "Current" is market price of chemical, if applicable; "Target" is estimated manufacturing cost for new solvents, or the estimated cost of bulk manufacturing for existing solvents.

Working Solution – The solute-free (i.e., CO_2-free) liquid solution used as the working solvent in the absorption/desorption process (e.g., the liquid mixture of MEA and water).

Absorption – The conditions of interest for absorption are those that prevail at maximum solvent loading, which typically occurs at the bottom of the absorption column. These may be assumed to be 1 atm total flue-gas pressure (corresponding to a CO_2 partial pressure of 0.13 bar) and 40°C; however, measured data at other conditions are preferable to estimated data.

Desorption – The conditions of interest for desorption are those that prevail at minimum solvent loading, which typically occurs at the bottom of the desorption column. Operating pressure and temperature for the desorber/stripper are process-dependent (e.g., an MEA-based absorption system has a typical CO_2 partial pressure of 1.8 bar and a reboiler temperature of 120°C). Measured data at other conditions are preferable to estimated data.

Pressure – The pressure of CO_2 in equilibrium with the solution. If the vapor phase is pure CO_2, this is the total pressure; if it is a mixture of gases, this is the partial pressure of CO_2. Note that for a typical pulverized-coal power plant, the total pressure of the flue gas is about 1 atm and the concentration of CO_2 is about 13.2 percent. Therefore, the partial pressure of CO_2 is roughly 0.132 atm or 0.130 bar.

Concentration – Mass fraction of pure solvent in working solution.

Loading – The basis for CO_2 loadings is moles of pure solvent.

Estimated Cost – Basis is kg/hr of CO_2 in CO_2-rich product gas; assuming targets are met.

Other Parameter Descriptions:

Chemical/Physical Solvent Mechanism:

$NH_4OH + CO_2 = NH_4HCO_3$

$(NH_4)2CO_3 + CO_2 + H_2O = 2NH_4HCO_3$

$NH_4(NH_2CO_2) + CO_2 + 2H_2O = 2NH_4HCO_3$

$NH_4HCO_3 = NH_4HCO_3$ (precipitate)

Solvent Contaminant Resistance – The solvent is expected to be resistant to several contaminants nominally present in an IGCC gas stream. Hydrogen sulfide reacts with the solvent, but it can be removed during the regeneration. The ammonia (NH_3) in the IGCC may negate any NH_3 loss from the solvent. The resistance of the solvent to trace metals is not known yet.

Solvent Foaming Tendency – Solvent foaming tendency was not observed in the bench-scale tests.

Flue Gas Pretreatment Requirements – The IGCC gas stream needs to undergo water-gas shift (WGS) reaction to convert CO to CO_2 and to be cooled to a temperature of 25 to 50°C.

Solvent Make-Up Requirements – The AC is a readily available commodity chemical and the make-up requirements are estimated to be small. However, the actual amount will be determined in the field test.

Waste Streams Generated – Ammonium sulfate solution from the capture of trace residual NH_3 in the gas.

Proposed Module Design – (Unless noted syngas pressure, temperature, and composition leaving WGS reactor and tar removal steps [wet basis]) should be assumed as follows (note that the gas will be compressed to 450 pounds per square inch gauge [psig]) before the absorber:

Pressure	165 psia
Temperature	95°F
Composition	
	vol percent
CO_2	8.3
H_2O	7.6
N_2	67.0
O_2	0
Ar	N/A
	ppmv
H_2S	200
NH_3	1,800

technology advantages

- Low-cost and stable reactive solution.
- Reactive solution has a high CO_2 loading capacity due, in part, to the formation of ABC solids during absorption.
- The CO_2 stripping in the AC-ABC process can be accomplished at elevated pressures in the range of 20 to 50 bar resulting in a 3 to 7.5 pressure ratio only to compress the gas to the pipeline pressure of 150 bar pressure.
- The AC-ABC process does not require compressors other than the CO_2 compressor.
- High CO_2 loading and high-pressure CO_2 stripper reduces the pumping power between the absorber and the regenerator.

- The AC-ABC process does not require high conversion of CO in the syngas feed.
- The hot syngas from the shift reactor can be used as the main heat source for the CO_2 stripping reducing the power output penalty.

R&D challenges

- Precipitation of solids could potentially foul packing and heat exchanger surfaces.
- Absorber operation at an elevated temperature could create excessive residual ammonia in the fuel gas stream leaving the absorber.
- Adequate separation of H_2S and CO_2 in the regenerator gas.

results to date/accomplishments

- Bench-scale mixed gas batch tests, in various gas compositions, were conducted. Carbon dioxide and H_2S capture rates were experimentally determined as a function of temperature, pressure, and solution and gas compositions. Data from regenerator experiments were used to determine the optimum regenerator conditions for the release of CO_2 and H_2S exclusively.
- The bench-scale tests demonstrated an efficient absorption of CO_2 and H_2S at elevated pressures without the need for sub-ambient operation. High-pressure CO_2 and concentrated H_2S streams can be released during the regeneration of loaded solution.
- The design of the pilot-scale continuous, integrated AC-ABC test system, designed to run on a coal-derived syngas, has been finalized.

next steps

Assemble the pilot-scale integrated AC-ABC unit and test the system using the gasifier gas stream at NCCC.

available reports/technical papers/presentations

"CO_2 Capture from IGCC Gas Streams Using AC-ABC Process," presented at the 2012 NETL CO_2 Capture Technology Meeting, Pittsburgh, Pennsylvania, July 2012. *http://www.netl.doe.gov/File%20Library/Events/2012/CO2%20Capture%20Meeting/I-Jayaweera-SRI-AC-ABC-Process.pdf*.

"CO_2 Capture from IGCC Gas Streams Using AC-ABC Process," presented at the 2011 NETL CO_2 Capture Technology Meeting, Pittsburgh, Pennsylvania, August 2011. *http://www.netl.doe.gov/File%20Library/Events/2011/co2capture/25Aug11-Jayaweera-SRI-AC-ABC-Process.pdf*.

"CO_2 Capture from IGCC Gas Streams Using AC-ABC Process," presented at the 2010 NETL CO_2 Capture Technology Meeting, Pittsburgh, Pennsylvania, September 2010. *http://www.netl.doe.gov/File%20Library/Events/2010/co2capture/Gopala-Krishnan---FE0000896.pdf*.

"CO_2 Capture from IGCC Gas Streams Using the AC-ABC Process," presented at the Pre-Combustion CO_2 Capture Kick-Off Meetings, Pittsburgh, Pennsylvania, November 2009.

this page intentionally left blank

APPENDIX B: CARBON DIOXIDE CAPTURE TECHNOLOGY SHEETS

PRE-COMBUSTION SORBENTS

ADVANCED CARBON DIOXIDE CAPTURE TECHNOLOGY FOR LOW-RANK COAL INTEGRATED GASIFICATION COMBINED CYCLE (IGCC) SYSTEMS

technology maturity:

Bench-Scale Testing and Slipstream Field Testing with Actual Syngas

project focus:

CO_2 Capture for Low-Rank Coal IGCC Systems

participant:

TDA Research

project number:

FE0007966

NETL project manager:

Steve Markovich
steven.markovich@netl.doe.gov

principal investigator:

Gokhan Alptekin
TDA Research, Inc
galptekin@tda.com

partners:

Southern Company
University of California Irvine
ConocoPhillips

performance period:

9/30/11 – 9/30/13

primary project goals

TDA will investigate the technical and economic advantages of using an integrated carbon dioxide (CO_2) sorbent and water-gas shift (WGS) catalyst system in an integrated gasification combined cycle (IGCC) power plant, fueled with low-rank coal, and designed to capture more than 90 percent of the CO_2 emissions.

technical goals

- TDA will evaluate the physical mix of the sorbent and catalyst pellets within the same reactor housing and at synthesizing WGS catalyst onto the pores of the adsorbents.
- The performance of the integrated system, first in the bench-scale tests and then in a field demonstration using actual coal-derived synthesis (syngas) gas, will be optimized, and bench-scale experiments will demonstrate that the sorbent/catalyst combination works in the presence of the key contaminants.

technical content

Through systems analysis and physical tests, TDA will show the technical and economic advantages of using an integrated CO_2 sorbent and WGS catalyst system in an IGCC power plant, fueled with low-rank coal, and designed to capture more than 90 percent of the CO_2 emissions.

The proposed system uses a high-temperature physical adsorbent capable of removing CO_2 above the dew point of the syngas and a contaminant tolerant WGS catalyst that can effectively convert carbon monoxide (CO) to hydrogen and CO_2 in the presence of a wide range of contaminants, particularly the alkali, sulfur, and phosphorous compounds resulting from the gasification of low-rank coals. The integrated operation of the WGS catalyst and CO_2 removal processes in a single step drives the equilibrium-limited WGS reaction toward hydrogen without the need to add large amounts of water (H_2O) to the syngas, greatly reducing the cost of CO_2 capture. Preliminary system analysis suggests that maintaining the H_2O:C ratio of reactants entering the shift reactor close to that required by the reaction stoichiometry (1:1) rather than using an excess of close to 2:1 will improve IGCC plant efficiency by more than two percentage points by reducing the consumption of shift steam. The process intensification provided by carrying out two unit operations (WGS and CO_2 removal) in the same reactor will reduce the capital cost and improve the process economics of new IGCC plants.

In a prior U.S. Department of Energy (DOE)/National Energy Technology Laboratory (NETL) project, TDA developed the sorbent for pre-combustion CO_2 capture (Contract No. DE-FE0000469). TDA successfully completed a field demonstration at the National Carbon

Capture Center (NCCC; Southern – Wilsonville, Alabama) in 2011 and demonstrated the sorbent's ability to remove CO_2 from a gasifier syngas stream. TDA also developed a contaminant tolerant WGS catalyst in another DOE project (DE-SC0004379). In bench-scale tests, TDA demonstrated the catalyst while maintaining stable performance in the presence of contaminants originating from coal-biomass co-gasification, including Na, K, P, Cl, S, all of which will also be present in the syngas generated by the gasification of low-rank coals.

In this project, TDA will work with UCI, Southern Company, and Conoco Phillips to demonstrate the viability of the new technology. Sorbent/catalyst and process design will be optimized and the efficacy of the integrated WGC/CO_2 capture system will be assessed, first in bench-scale experiments, and then slipstream field demonstrations. The slipstream testing will be conducted at Southern Company's Wilsonville, Alabama, air-blown gasifier.

Figure 1: TDA's CO_2 Removal Skid

Figure 2: TDA's Gas Conditioning Skid

technology advantages

- Capturing CO_2 above the dew point of the syngas significantly improves the net plant efficiency.
- Carbon dioxide recovered at pressure reduces compression costs for sequestration.
- The integration of the WGS catalyst and CO_2 removal processes in a single step drives the equilibrium-limited WGS reaction toward hydrogen, reducing the need for water, and greatly reducing the cost of CO_2 capture.
- The process intensification provided by carrying out two unit operations (WGS and CO_2 removal) in the same reactor will reduce the capital cost and improve the process economics of new IGCC plants.

R&D challenges

Achieving acceptable CO conversion and CO_2 capture rates in a mixed CO catalyst/CO_2 sorbent fixed-bed reactor design while maintaining a low-steam:CO ratio.

results to date/accomplishments

- Performed field demonstrations for a period of four weeks.
- Demonstrated that CO conversion in combination with the CO_2 yields high conversion rates even at steam:CO ratios less than 1.2.
- Demonstrated that the CO_2 capacity of the sorbent was unaffected by the catalyst.
- Completion of more than 1,140 cycles in the multiple cycle tests.
- Completed testing of sorbents/catalysts to determine working capacity and plant efficiency.

next steps

- Complete testing with prototype unit.
- Complete techno-economic analysis.
- Finalize design of the combined WGS and CO_2 removal unit.

available reports/technical papers/presentations

N/A.

EVALUATION OF DRY SORBENT TECHNOLOGY FOR PRE-COMBUSTION CO_2 CAPTURE

primary project goals

URS Group and the University of Illinois at Urbana-Champaign (UIUC) are developing dry carbon dioxide (CO_2) sorbent materials, through the coupling of thermodynamic, molecular simulation, as well as process simulation modeling with novel synthesis methods, that possess superior adsorption and regeneration properties at conditions applicable to water-gas shift (WGS) systems. If successful, this project will demonstrate that one or more sorbent materials are able to remove greater than 90 percent of the CO_2 from a simulated synthesis gas (syngas) at conditions applicable to a WGS reactor, thus meeting a key U.S. Department of Energy (DOE) program objective.

technical goals

Specific technical objectives of this project include:

- Determination of optimal CO_2 sorbent properties and operating conditions for CO_2 removal and regeneration and carbon monoxide (CO) conversion in a simulated syngas using a combination of computational and experimental methods.
- Development of one or more sorbents that recover high-quality heat during CO_2 adsorption, regenerate at elevated pressure, have minimal deactivation over multiple cycles, have high selectivity at high temperatures, have high adsorption capacity, and have acceptable thermal stability and mechanical integrity. This will result in sorbents capable of 90 percent CO_2 removal with high loading capacities and able to operate at the high temperatures and pressures typically encountered upstream of a WGS reactor. If successful, the sorbents developed in this program will augment or replace the CO conversion catalysts currently used in WGS reactors and improve overall WGS thermal efficiency.
- Determine the techno-economic feasibility of the sorption-enhanced WGS (SEWGS) process for removing CO_2.

technical content

URS Group, Inc. is leading an investigative effort for the development of a dry sorbent process configured to combine the WGS reaction with CO_2 removal for coal gasification systems. The result will be an SEWGS technology.

A novel approach is being taken that integrates the use of multiple computational models with sorbent synthesis and characterization activities to develop sorbents with optimal CO_2 removal properties at high temperatures and pressures applicable to WGS applications. Tests are being performed where sorbent performance is evaluated in simulated WGS gas mixtures at commercially relevant conditions. Appropriate data reduction and analysis is being conducted in order to provide suitable data that will provide the basis for a techno-economic analysis to evaluate the feasibility and scale-up potential of the SEWGS technology.

technology maturity:

Bench-Scale Using Simulated Syngas

project focus:

Sorbent Development for WGS

participant:

URS Group

project number:

FE-0000465

NETL project manager:

Elaine Everitt
elaine.everitt@netl.doe.gov

principal investigator:

Carl Richardson
URS Group, Inc.
carl_richardson@urscorp.com

partners:

Illinois Clean Coal Institute
University of Illinois at Urbana-Champaign (UIUC)

performance period:

1/1/10 – 9/30/13

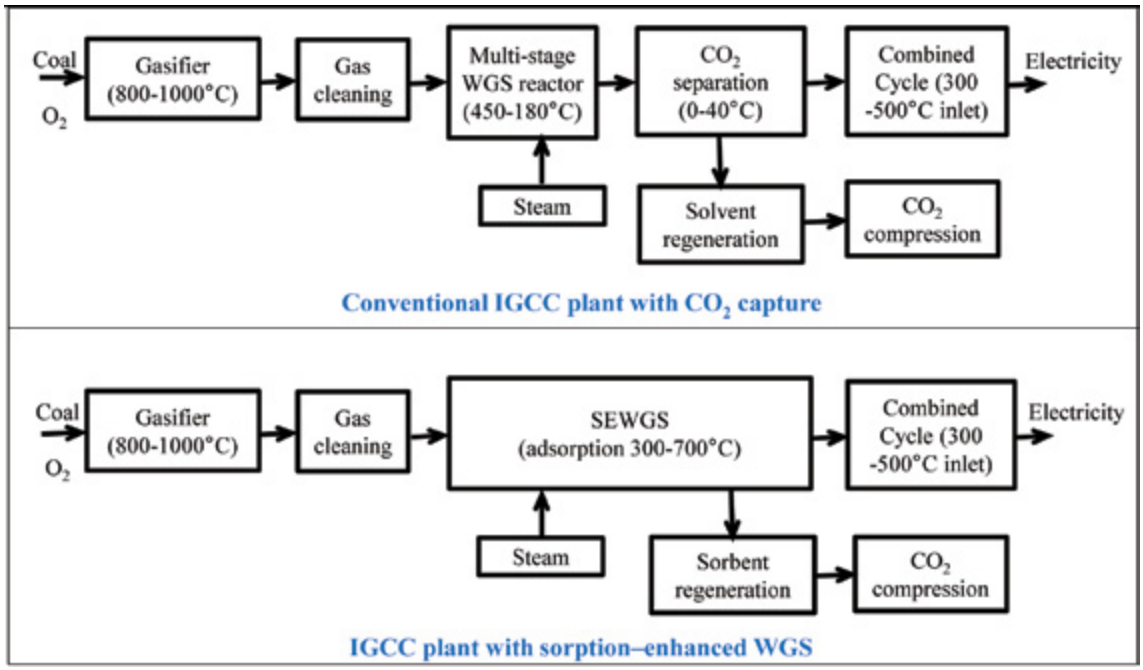

Figure 1: IGCC with SEWGS vs. Conventional IGCC

UIUC will perform process simulation modeling and sorbent molecular and thermodynamic analyses. These analyses will allow prediction of optimal sorbent properties and identification of optimal operating temperature and pressure windows to maximize the energy efficiency of the combined WGS and CO_2 capture processes. The thermodynamic study will include developing phase equilibrium diagrams for potential sorbents, identifying optimum operating conditions for CO_2 capture, understanding impacts of syngas impurities, and identifying promising sorbents. Molecular simulation will predict isotherms and properties, predict kinetics and dynamics, and identify sorbents with desired properties using quantum chemistry/mechanics, force field-based Molecular Dynamics (MD), and reactive dynamics (RD) simulations. Process simulation analysis will analyze various process scenarios for heat integration between SEWGS and integrated gasification combined cycle (IGCC) and process energy performance for individual sorbents.

Concurrently, UIUC will perform sorbent development. Sorbents will be synthesized with desired pore structure and composition guided by the first phase testing and modeling effort. Sorbents will be synthesized using various precursors, including calcium, magnesium, and other metal oxides, as well as zirconates, titanates, silicates, aluminates, and adsorbent-shift catalyst hybrid. Sorbent down-selection will proceed according to the decision tree shown in Figure 2.

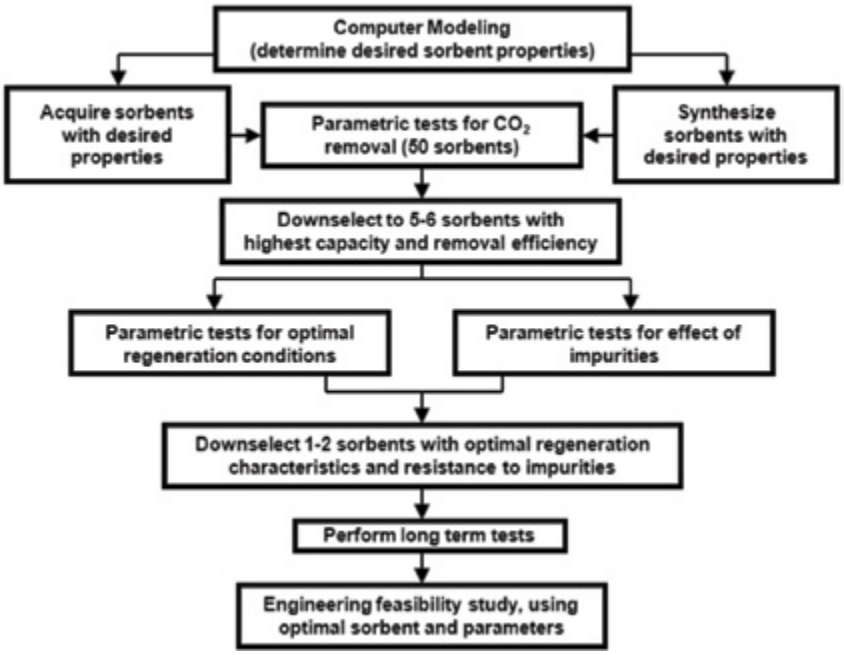

Figure 2: Sorbent Development and Analysis Decision Tree

UIUC will use an atmospheric-pressure thermogravimetric analyzer (TGA) and a high temperature and pressure reactor (HTPR) system capable of 300 pounds per square inch gauge (psig) and 950°C for screening sorbents for CO_2 removal. Also, URS will construct an HTPR to evaluate sorbent adsorption performance in presence of syngas impurities and regeneration performance. Five to seven down-selected sorbents will also be tested for sorbent resistance to syngas impurities and determine optimal regeneration parameters. One to two sorbents will be further down-selected and will be tested on a longer-term basis.

Lab results will be used in a preliminary engineering study of process feasibility for adsorbing and removing CO_2 as part of the WGS process with the comparison made to base WGS operation and other CO_2 removal strategies. Parameters to be evaluated include costs of >90 percent removal (cost of electricity [COE], operation and maintenance [O&M]), sorbent costs, anticipated lifetime (i.e., replacement rate), estimated future market costs of precursor materials, handling equipment, sorbent regeneration costs, heat/energy integration, compression costs with SEWGS, unit footprint, and capital costs and scalability.

TABLE 1: SOLID SORBENT PARAMETERS

	Units	Current R&D Value	Target R&D Value
Sorbent			
True Density @ STP	kg/m^3		TBD
Bulk Density	kg/m^3		TBD
Average Particle Diameter	mm	Nano (20-70 nm) or micro meter (0.5-10 µm) level; particles can be pelletized if needed	TBD based on the reactor design analysis
Particle Void Fraction	m^3/m^3		
Packing Density	m^2/m^3		
Solid Heat Capacity @ STP	kJ/kg-K	<1	<1
Crush Strength	kg_f		
Manufacturing Cost for Sorbent	$/kg		

TABLE 1: SOLID SORBENT PARAMETERS

	Units	Current R&D Value	Target R&D Value
Adsorption			
Pressure	bar	30 – 40	40
Temperature	°C	300 – 700	550 – 650
Equilibrium Loading	g mol CO_2/kg		
Heat of Adsorption	kJ/mol CO_2	100 – 200	TBD
Desorption			
Pressure	bar	Up to 30	Highest possible up to 30
Temperature	°C	Depends on individual sorbent and highest regeneration pressure achievable	TBD; optimization based on minimal energy limit
Equilibrium Loading	g mol CO_2/kg		
Heat of Desorption	kJ/mol CO_2		
Proposed Module Design		*(for equipment developers)*	
Flow Arrangement/Operation	-	Temperature swing	Temperature swing
Flue Gas Flowrate	kg/hr		
CO_2 Recovery, Purity, and Pressure	percent / percent / bar	90 percent, 99 percent,	
Adsorber Pressure Drop	bar	Depending on sorbent properties, to be determined during project	TBD
Estimated Absorber/Stripper Cost of Manufacturing and Installation	$ / kg/hr		

Definitions:

STP – Standard Temperature and Pressure (15°C, 1 atm).

Sorbent – Adsorbate-free (i.e., CO_2-free) and dry material as used in adsorption/desorption cycle.

Manufacturing Cost for Sorbent – "Current" is market price of material, if applicable; "Target" is estimated manufacturing cost for new materials, or the estimated cost of bulk manufacturing for existing materials.

Adsorption – The conditions of interest for adsorption are those that prevail at maximum sorbent loading, which typically occurs at the bottom of the adsorption column. These may be assumed to be 1 atm total flue-gas pressure (corresponding to a CO_2 partial pressure of 0.13 bar) and 40°C; however, measured data at other conditions are preferable to estimated data.

Desorption – The conditions of interest for desorption are those that prevail at minimum sorbent loading, which typically occurs at the bottom of the desorption column. Operating pressure and temperature for the desorber/stripper are process-dependent. Measured data at other conditions are preferable to estimated data.

Pressure – The pressure of CO_2 in equilibrium with the sorbent. If the vapor phase is pure CO_2, this is the total pressure; if it is a mixture of gases, this is the partial pressure of CO_2. Note that for a typical PC power plant, the total pressure of the flue gas is about 1 atm and the concentration of CO_2 is about 13.2 percent. Therefore, the partial pressure of CO_2 is roughly 0.132 atm or 0.130 bar.

Packing Density – Ratio of the active sorbent area to the bulk sorbent volume.

Loading – The basis for CO_2 loadings is mass of dry, adsorbate-free sorbent.

Flow Arrangement/Operation – Gas-solid module designs include fixed, fluidized, and moving bed, which result in either continuous, cyclic, or semi-regenerative operation.

Estimated Cost – Basis is kg/hr of CO_2 in CO_2-rich product gas; assuming targets are met

This is a research and development (R&D) program involving fairly immature technology. As such, many target R&D values will be determined during execution of the test program and will be impacted by a number of key process parameters, including sorbent type and cost, sorbent performance and loading capacity, sorbent lifetime, regeneration conditions and cycling parameters, and complexity of integration of optimal adsorption and regeneration processing steps.

Sorbent Heating/Cooling Method – For sorbent regeneration, the sorbent is heated in a fluidized-bed or moving-bed configuration with heat supplied by either hydrogen (H_2) (or syngas) oxy-combustion or steam extracted from the gasification plant steam cycle. Before entering the adsorption bed, the regenerated sorbent is cooled by exchanging heat with inlet regeneration H_2/oxygen (O_2) or syngas. In the adsorption bed, a heat exchanger (such as a boiler tube bundle used in the fluidized-bed boiler) is used for recovering heat generated from CO_2 adsorption.

Heat of Adsorption Handling – Adsorption heat is recovered during CO_2 adsorption by using a heat exchanger to generate steam, which is combined into the gasification plant's steam cycle for electricity generation.

Heat Supply Method for Regeneration – Two methods will be considered. One is to burn a small amount of the H_2 or syngas using O_2 to supply heat directly. Another approach is to use the steam from the gasification plant's steam cycle if the regeneration temperature is below 1,000°F.

Contamination Resistance – This program will evaluate the impact of various syngas impurities on the adsorption and regeneration performance of promising CO_2 sorbents. Sorbents may not be resistant to sulfur species (hydrogen sulfide [H_2S], carbon disulfide [CS_2], etc).

Flue Gas Pretreatment Requirements – The pretreatment of H_2S/CS_2 is needed for sorbents with no sulfur resistance. If it is determined that the performance of identified sorbents is inhibited by sulfur species present in the syngas, additional work will focus on the development of sorbents materials that are resistant to sulfur; the objective will be to avoid the need for syngas pretreatment associated with this technology.

Waste Streams Generated – Desulfurization byproducts.

technology advantages

- High CO conversion with reduced stream addition.
- No or limited WGS catalyst use.
- High-quality adsorption heat usable for generation of high-quality steam.
- Limited gas cooling/reheating requirement downstream.
- No separate CO_2 capture unit required.
- Reduced energy requirement for CO_2 compression.

R&D challenges

- Sorbent pores may be plugged during adsorption, causing capacity and activity loss.
- Long-term capacity and activity stability after multiple cycles.
- Selectivity at high temperature.
- System/reactor issues, such as material transport and handling at high temperature and pressure.

results to date/accomplishments

- More than 40 sorbents were modeled and subsequently down-selected to seven candidates (magnesium oxide [MgO], calcium oxide [CaO], lithium zirconate [Li_2ZrO_3], calcium zirconium oxide [$CaZrO_3$], barium zirconate [$BaZrO_3$], barium titanate [$BaTiO_3$], and barium silicate [$BaSiO_3$]) for further development.
- Process simulations were performed for a baseline IGCC plant with WGS and a Selexol process and compared to an IGCC

with SEWGS. These showed a 0.5 to 2.4 percentage points increase in net thermal efficiency for the simulated plant with SEWGS.

- Molecular simulation studies included quantum chemical (QC) calculations and MD simulations with reactive field force (ReaxFF). Molecular simulation was successfully applied to assess carbonation and calcination reactions (CaO).
- The impacts of sorbent structure and the sintering of calcium oxide particles with and without CO_2 chemisorption, and the role of a dopant in reducing the sintering of CaO particles, were also determined.
- More than 60 SEWGS sorbents were synthesized using Mechanical alloying (MA), Ultrasonic Spray Pyrolysis (USP), and Flame Spray Pyrolysis (FSP) techniques.
- CaO sorbents prepared by dry and wet ball-milled MA methods exhibited improved CO_2 adsorption capacities and stabilities over commercial $CaCO_3$ materials. The performance of $CaCO_3$ sorbents was improved by doping with inert MgO.
- Hollow, porous $CaCO_3$ sorbents synthesized using the USP method were spheres of ≈ 1µm with a shell thickness of 50-100 nm. The CaO generated upon calcination of the $CaCO_3$ exhibited a high surface area (up to 75m^2/g).
- A 75:25 w/w CaO:Ca12Al14O$_3$3 (mayenite) sorbent retained 91 percent of its initial CO_2 capacity after 15 cycles and 79 percent after 50 cycles, while a USP CaO only retained 43 percent after 15 cycles.
- The surface area of nano-sized (<70 nm) CaO, ZrO_2-doped CaO, MgO, MgO-doped CaO, and ZrO_2-doped MgO sorbents synthesized using the FSP method ranged between 21 and 54 m^2/g. ZrO_2 was found to be an effective dopant to improve the stability of Cao-based sorbents. A ZrO_2-CaO (Zr:Ca=0.2:1) sorbent maintained its capacity at 0.5g CO_2/g sorbent over 15 adsorption-desorption cycles.
- An HTPR tube reactor with quarter-inch ID and one-foot length was also used to test sorbents at UIUC. These tests were performed at 650°C and CO_2 partial pressures up to 4 bar adsorption conditions.

next steps

- CO_2 adsorption and combined CO_2 adsorption + WGS of selected sorbents using HTPR setup.
- Continue impurity testing and parametric regeneration optimization.
- Long-term tests on select sorbents.

available reports/technical papers/presentations

Steen,W.; Richardson, C.; Machalek, T.; Paradis, J.; Rostam-Abadi, M.; Lu, Y.; Lu, H.; Napoli, M.; and Everitt, E., "Solid Sorbent enhanced Water-Gas Shift Process for Pre-Combustion CO_2 Capture," Proceedings of the Power Plant Air Pollutant Control "Mega" Symposium, Paper #16, Baltimore, MD, August 2012.

Evaluation of Dry Sorbent Technology for Pre-combustion CO_2 Capture; Presentation at the 2012 NETL CO_2 Capture Technology Meeting, Pittsburgh, Pennsylvania, July 2012. *http://www.netl.doe.gov/publications/proceedings/12/co2capture/presentations/4-Thursday/B%20Steen-URS-Pre-combustion%20Sorbent.pdf*.

Lu, Y.; Lu, H.; Rostam-Abadi, M.; Sayyah, M.; Suslick, K.; Steen, W.; Richardson, C.; Hirschi, J.; and Napoli, M., "Evaluation of Dry Sorbent Technology for Pre-Combustion CO_2 Capture", Proceedings of the Clearwater Clean Coal Conference – 37th International Technical Conference on Clean Coal & Fuel Systems, Clearwater, FL, June 2012.

Steen, W.; Richardson, C.; Lu, Y.; Lu, H.; and Rostam-Abadi, M., "Evaluation of Dry Sorbent Technology for Pre-Combustion CO_2 Capture," Proceedings of the 2011 DOE-NETL CO_2 Capture Technology Meeting, Pittsburgh, PA, August 2011. *http://www.netl.doe.gov/publications/proceedings/11/co2capture/presentations/4-Thursday/25Aug11-Steen-URS-Dry%20Sorbent%20Pre-CombustionCapture.pdf*.

Richardson, C., and Lu, Y., "Evaluation of Dry Sorbent Technology," Presentation at the 2010 NETL CO_2 Capture Technology Meeting, Pittsburgh, Pennsylvania, September 2010. *http://www.netl.doe.gov/publications/proceedings/10/co2capture/presentations/thursday/Carl%20Richardson%20-%20FE0000465.pdf*.

"Evaluation of Dry Sorbent Technology for Pre-Combustion CO_2 Capture," Pre-combustion CO_2 Capture Kick-off Meetings, Pittsburgh, Pennsylvania, November 2009. *http://www.netl.doe.gov/publications/proceedings/09/CO2capture/7-URS%20Dry%20Sorbent%20Kickoff%20Presentatin-111309.pdf*

ADVANCED ACID GAS SEPARATION TECHNOLOGY FOR THE UTILIZATION OF LOW-RANK COALS

technology maturity:
Laboratory-Scale

project focus:
Advanced Acid Gas Separation

participant:
Air Products and Chemicals

project number:
FE0007759

NETL project manager:
Susan Maley
susan.maley@netl.doe.gov

principal investigator:
Jeffrey Kloosterman
Air Products and Chemicals
kloostjw@airproducts.com

partners:
UNDEERC

performance period:
9/30/11 – 12/31/12

primary project goals

Air Products and Chemicals will conduct extensive testing using a mobile, two-bed Sour Pressure Swing Adsorption (PSA) unit fed with North Dakota lignite coal-based synthesis gas (syngas) streams. The results of this testing will be used to generate a high-level pilot process design and to prepare a techno-economic assessment. Air Products' existing Sour PSA test unit will be modified to improve operability and reliability and operate under exposure to impurities from the gasification of low-rank coal. The test unit will then be attached to the Energy and Environmental Research Center's (EERC) fluidized bed gasifier and operated utilizing North Dakota lignite coal in both PSA and thermal swing adsorption (TSA) modes to determine the suitability of the unit to operate with such coal, and provide information necessary for the design of a high-level pilot unit and a techno-economic assessment, ultimately resulting in a reduction in cost of electricity (COE).

technical goals

- Modify PSA/TSA unit for tar gas operations.
- Run PSA/TSA unit with shifted sour syngas derived from EERC fluidized bed gasifier with a Montana Rosebud Powder River Basin (PRB) coal in oxy-blown mode.

technical content

Air Products and Chemicals has developed a proprietary alternative that consists of three process steps: (1) Sour PSA that separates the desired products from carbon dioxide (CO_2) and hydrogen sulfide (H_2S); (2) sulfur disposition that can be accomplished in several different modes; and (3) a CO_2 polishing and compression step that produces sequestration-ready CO_2.

The Sour PSA technology is based on adsorption processes that utilize pressure swing or temperature swing regeneration methods. The technology is being developed to meet the stringent demands of the desired hydrogen (H_2)-enriched product for power production, while simultaneously yielding a waste gas stream that can provide amenable recovery of sulfur and a high-purity CO_2 byproduct stream.

One option for a Sour PSA process configuration is the Sour PSA unit followed by a sour oxy-combustion unit and finally the CO_2 purification/compression unit (CPU). The Sour PSA is fed sour syngas and produces high-pressure, H_2-enriched product and low-pressure, CO_2/H_2S-rich tail gas. The oxy-combustion process is used to effectively combust flammable species in the tail gas (H_2, carbon monoxide [CO], methane [CH_4]) to CO_2 and H_2O, and H_2S to sulfur oxide (SO_x) and H_2O. This creates an effluent stream that contains highly enriched CO_2 with minor impurities. The heat generated from the combustion system can be used for preheating streams to a turbine in a power system, steam generation, additional reforming in a hydrogen system, or any other ancillary use of high-quality heat. The oxy-fuel

combustion may take place either in a once-through manner or with cooled flue gas recycle to moderate the combustion temperature.

The sour oxy-fuel combustion is accomplished by combusting the waste gas with an excess of pure oxygen (O_2), in which case the combustion products will be H_2O, CO_2, sulfur dioxide (SO_2), sulfur trioxide (SO_3), and excess O_2. The SO_2 and excess O_2 may be removed from the CO_2 by reactive processes applied during the compression sequence. Specifically, this requires careful design of the compression system coupled with acid production reactors of appropriate size.

A second option is to treat the tail gas from the PSA to remove the H_2S prior to purification of the CO_2 product stream. An acid gas enrichment (AGE) unit can be used for removing the H_2S from the tail gas stream and is generally configured in an absorber/stripper arrangement with a solvent that is selective to H_2S. The H_2S-enriched stream is then sent to a Claus plant that produces elemental sulfur. A partial condensation process may be used on the resulting sulfur-free CO_2 stream to produce the required CO_2 purity. In this project, Air Products conducted extensive testing using a mobile, two-bed, Sour PSA unit fed with North Dakota lignite coal-based syngas streams. This testing was conducted in collaboration with the University of North Dakota's EERC, utilizing their location and fluidized bed gasifier. Measurements of adsorbent and PSA unit performance over time were taken and analyzed. The adsorbent system was operated in TSA mode, as well as PSA mode, to determine the capability for TSA to operate when exposed to syngas derived from lower-rank coal. The two-bed PSA system processed syngas produced from the gasification of PRB low-rank coal for more than 1,000 cycles and reached cyclic steady state operation. Air Products used a proprietary simulation tool to estimate process performance for a commercial, multi-bed system using data derived from the two-bed system operation.

technology advantages

- Air Products' Sour PSA technology is an acid gas removal system capable of reducing the H_2S content in the treated stream down to parts-per-billion (ppb) level while also rejecting more than 99 percent of the CO_2.
- Air Products' Sour PSA technology provides a more cost-effective solution for purifying raw syngas, mainly from the reduction in the capital cost of the equipment.
- In contrast to most incumbent technologies, the Sour PSA system does not require refrigeration and a complex network of exchangers for heat integration.
- The Sour PSA system is reliable and simple to operate since it does not have any moving parts (except valves) and does not require handling of any acid gas solvent.

R&D challenges

- The long-term stability of the Sour PSA process performance has not been evaluated. Extended two-bed PSA operation with a gasifier syngas slipstream over a period of at least two months is needed.
- All testing to date has been with a two-bed PSA unit, so only simple PSA cycles have been addressed. Sour or sweet syngas tests with a multi-bed PSA unit are needed to evaluate the impact of pressure equalization steps on performance.
- Previous work has focused on producing pure H_2 or enriched H_2 for power production. For syngas applications, both H_2 and CO must be recovered from the process. Development of the correct PSA adsorbent layering scheme and process cycle, as well as downstream sulfur disposition technologies, are required.

results to date/accomplishments

- Completed high-level pilot plant design work of a Sour PSA system for acid gas separation treatment of PRB-derived syngas, including a complete engineering design with associated cost estimate.
- Operated a laboratory-scale, two-bed PSA system to process syngas produced from the gasification of PRB low-rank coal for more than 1,000 cycles and reached cyclic steady state operation. Used Air Products' proprietary simulation tool to estimate process performance for a commercial, multi-bed system.
- Completed multiple techno-economic studies on the benefit of using Air Products' Sour PSA technology for acid gas removal in integrated gasification combined cycle (IGCC) applications. These studies show that using Sour PSA technology would result in at least a 15 percent reduction in the incremental cost of CO_2 capture compared to commercially available best technologies. The studies also demonstrated that the optimum sulfur disposition technology (acid production or elemental sulfur) is dependant of the sulfur content of the gasified fuel.

next steps

This project ended on December 31, 2012.

available reports/technical papers/presentations

Hufton, J.R.; Quinn, R.; Amy F.; Kloosterman, J.W.; O'Connell, E.M.; Dunham, G.; and Swanson, M., "Advanced Acid Gas Separation Technology for the Utilization of Low Rank Coals" presented at the 29th Annual International Pittsburgh Coal Conference, Pittsburgh, Pennsylvania, October 2012.

Kloosterman, J.W.; Hufton, J.R.; Golden, T.C.; Quinn, R.; Schaffer, C.L.; Hendershot, R.J.; Fogash, K.B.; Wright, A.; and White, V. "Advanced Hydrogen and CO_2 Capture Technology for Sour Syngas," Proceedings of the 2010 Gasification Technology Conference, Washington, D.C., October 2010.

EVALUATION OF DRY SORBENT TECHNOLOGY FOR PRE-COMBUSTION CO_2 CAPTURE

technology maturity:

Pilot-Scale Slipstream Using Actual Syngas

project focus:

High-Capacity Regenerable Sorbent

participant:

TDA Research

project number:

FE00004695

NETL project manager:

Arun C. Bose
arun.bose@netl.doe.gov

principal investigator:

Dr. Gokhan Alptekin
TDA Research, Inc.
galptekin@tda.com

partners:

ConocoPhillips
MeadWestvaco
Southern Company
University of California Irvine

performance period:

10/1/09 – 12/31/12

primary project goals

TDA Research set out to further develop a low-cost, high-capacity regenerable carbon dioxide (CO_2) sorbent technology, demonstrating its technical and economic viability for pre-combustion CO_2 capture from coal-derived synthesis gas (syngas) fueling integrated gasification combined cycle (IGCC) power plants.

technical goals

- Optimize chemical and physical properties of an existing sorbent.
- Modify the sorbent to improve capacity and stability.
- Scale-up sorbent production using commercially adoptable equipment.
- Demonstrate long-term sorbent performance at bench-scale in the presence of contaminants.
- Design and build a prototype unit to support slipstream demonstration tests using actual syngas.
- Detailed process design and cost analysis to evaluate sorbent's ability to remove CO_2 at a lower cost than current technologies.

technical content

TDA set out to develop a novel pre-combustion CO_2 capture technology that uses a TDA proprietary sorbent modified to remove CO_2 from shifted syngas. The CO_2 capture system uses two (or more) beds that switch positions between adsorption and regeneration. In addition to the conventional pressure and temperature swing operation, the sorbent can be regenerated under near isothermal and isobaric conditions, while the driving force for separation is provided by a swing in CO_2 concentration. The sorbent consists of a carbon support modified with surface functional groups that remove CO_2 via strong physical adsorption. The CO_2 surface interaction is strong enough to allow operation at elevated temperatures. Because the CO_2 is not bonded via a covalent bond, the energy input to the regeneration is low – only 4.9 kcal/mole of CO_2 removed (comparable to Selexol™). This energy requirement is much lower than that of the chemical absorbents (e.g., sodium carbonate [Na_2CO_3] requires 29.9 kcal/mol) and amine solvents (≈14 kcal/mol). The energy output loss of the IGCC plant is expected to be similar to that of Selexol's; however, a higher overall IGCC efficiency can be achieved due to higher temperature CO_2 capture.

Initially, the researchers optimized the chemical, mechanical, and physical properties of the sorbent to optimize the active material content; assess the impact of key synthesis parameters on surface area, pore volume, and pore size distribution; and determine crush strength and attrition resistance. Costs were kept to a minimum by evaluating low-cost raw materials and optimizing the production process. Sorbents were evaluated under simulated syngas, water-gas shift (WGS), and simulated contaminant conditions using two thermogravimetric analyzers (TGAs) and one-, three-, and six-inch bench-scale flow reactors. TDA and the

University of California Irvine (UCI) completed process design and modeling. Based on that information, UCI created multiple design options and the best option was selected for detailed simulation.

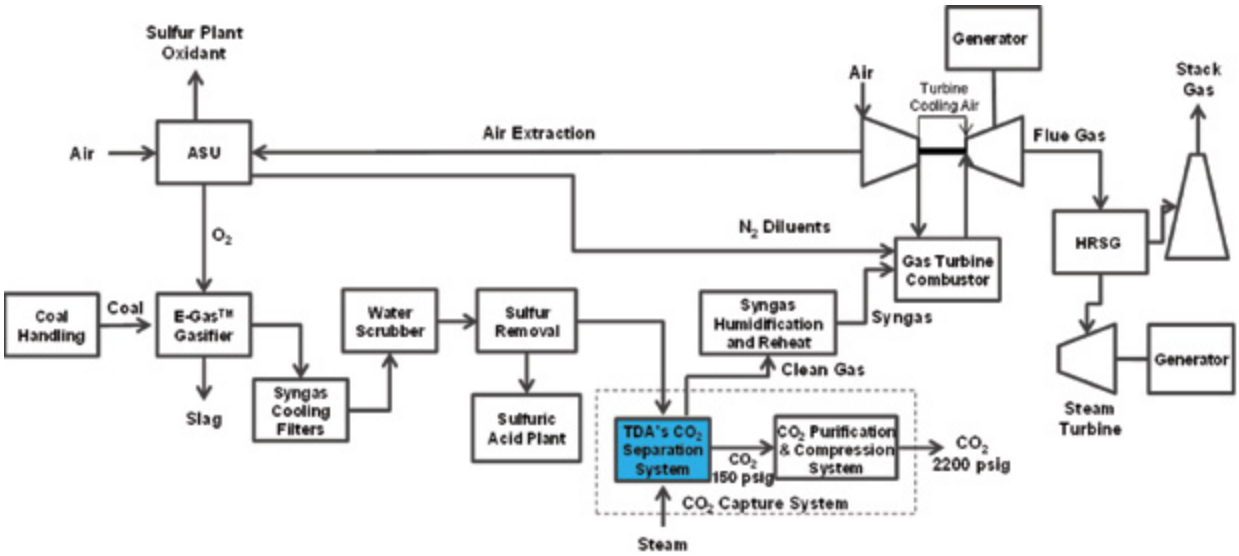

Figure 1: TDA's CO_2 Capture System Integrated with Phillips 66's E-Gas Gasifier

The next objective was to scale-up sorbent production by a factor of 10 at the end of Year 1 using commercially adoptable equipment. Scale-up explored the use of continuous or semi-continuous preparation approaches, and will reduce or optimize the number of processing steps via intensification (co-synthesis, co-firing, etc.). A preparation recipe was developed in cooperation with MeadWestvaco, who completed a detailed analysis to estimate the cost of the sorbent. Long-term tests were performed to ensure that the sorbent does maintain its CO_2 capacity over many cycles.

Year 2 of the project focused on designing, building, and testing a prototype unit using slipstream syngas and analyzing the results. TDA designed and sized sorbent reactors for two gasifier types: Phillips 66's E-GasTM gasifier and the GE gasifier.

TDA and UCI optimized the process design and modeling. The focus of system analysis in Year 2 was on the integration of the CO_2 capture system with the IGCC plant. TDA fabricated the test module, which had a control rack using LabView programming to control, monitor, and log key process parameters. The test module also had an analyzer rack for continuous analysis of syngas on the adsorption and regeneration sides. TDA conducted all shakedowns and troubleshooting before shipping the test system. Field tests were performed at ConocoPhillips' Wabash River IGCC Plant with the oxygen (O_2)-blown E-Gas gasifier in Terre Haute, Indiana, and in collaboration with the Southern Company at the National Carbon Capture Center (NCCC) using the syngas generated by an air-blown gasifier at Wilsonville, Alabama. Prototype unit field tests and system analysis studies were completed.

TABLE 1: SOLID SORBENT PARAMETERS

	Units	Current R&D Value	Target R&D Value
Sorbent			
True Density @ STP	kg/m^3	1,362	
Bulk Density	kg/m^3	589	
Average Particle Diameter	mm	3.2-6.4	
Particle Void Fraction	m^3/m^3	0.567	
Packing Density	m^2/m^3	241.5	
Solid Heat Capacity @ STP	kJ/kg-K	0.93	
Crush Strength	kg_f	5.0-9.0	

TABLE 1: SOLID SORBENT PARAMETERS

	Units	Current R&D Value	Target R&D Value
Manufacturing Cost for Sorbent	$/kg	5.30	
Adsorption			
Pressure	bar	33.8	
Temperature	°C	198	
Equilibrium Loading	g mol CO_2/kg	1.74	
Heat of Adsorption	kJ/mol CO_2	20.5±1.7	
Desorption			
Pressure	bar	10	
Temperature	°C	195.5	
Equilibrium Loading	g mol CO_2/kg	0.16	
Heat of Desorption	kJ/mol CO_2	18.0±3.3	
Proposed Module Design		*(for equipment developers)*	
Flow Arrangement/Operation	-	3-trains of 8 cycling fixed beds	
Flue Gas Flowrate	kg/hr	750,172	
CO_2 Recovery, Purity, and Pressure	percent / percent / bar	95.9 percent, 99.9 percent, 17.8 bar	
Adsorber Pressure Drop	bar	0.93	
Estimated Absorber/Stripper Cost of Manufacturing and Installation	$ / kg/hr	139.3*	

* Cost of the CO_2 separation unit, including purification stages (three trains of eight fixed beds with auxiliaries and purification unit).

Definitions:

STP – Standard Temperature and Pressure (15°C, 1 atm).

Sorbent – Adsorbate-free (i.e., CO_2-free) and dry material as used in adsorption/desorption cycle.

Manufacturing Cost for Sorbent – "Current" is market price of material, if applicable; "Target" is estimated manufacturing cost for new materials, or the estimated cost of bulk manufacturing for existing materials.

Adsorption – The conditions of interest for adsorption are those that prevail at maximum sorbent loading, which typically occurs at the bottom of the adsorption column. These may be assumed to be 1 atm total flue-gas pressure (corresponding to a CO_2 partial pressure of 0.13 bar) and 40°C; however, measured data at other conditions are preferable to estimated data.

Desorption – The conditions of interest for desorption are those that prevail at minimum sorbent loading, which typically occurs at the bottom of the desorption column. Operating pressure and temperature for the desorber/stripper are process-dependent. Measured data at other conditions are preferable to estimated data.

Pressure – The pressure of CO_2 in equilibrium with the sorbent. If the vapor phase is pure CO_2, this is the total pressure; if it is a mixture of gases, this is the partial pressure of CO_2. Note that for a typical PC power plant, the total pressure of the flue gas is about 1 atm and the concentration of CO_2 is about 13.2 percent. Therefore, the partial pressure of CO_2 is roughly 0.132 atm or 0.130 bar.

Packing Density – Ratio of the active sorbent area to the bulk sorbent volume.

Loading – The basis for CO_2 loadings is mass of dry, adsorbate-free sorbent.

Flow Arrangement/Operation – Gas-solid module designs include fixed, fluidized, and moving bed, which result in either continuous, cyclic, or semi-regenerative operation.

Estimated Cost – Basis is kg/hr of CO_2 in CO_2-rich product gas; assuming targets are met.

Other Parameter Descriptions:

Chemical/Physical Sorbent Mechanism – The sorbent consists of a carbon support modified with surface functional groups that remove CO_2 via strong physical adsorption. The CO_2 surface interaction is strong enough to allow operation at elevated temperatures. Because the CO_2 is not bonded via a covalent bond, the energy input to the regeneration is low – only 4.9 kcal/mole of CO_2 removed (comparable to Selexol).

Sorbent Contaminant Resistance – The sorbent will be resistant to syngas contaminants.

Sorbent Attrition and Thermal/Hydrothermal Stability – Very stable, similar to carbon molecular sieves.

Syngas Pretreatment Requirements – Particulate removal, bulk desulfurization, and WGS.

Sorbent Make-Up Requirements – Sorbent bed life is two years.

Waste Streams Generated – The spent sorbent will have to be replaced periodically (two years).

Process Design Concept – Flow sheet/block flow diagram is provided above.

Proposed Module Design – TDA's warm gas CO_2 capture system consists of three trains of eight-bed pressure swing adsorption (PSA) systems, containing a total of 24 beds that go through various PSA cycle steps. A 3-D layout of TDA's warm gas CO_2 capture system is shown below:

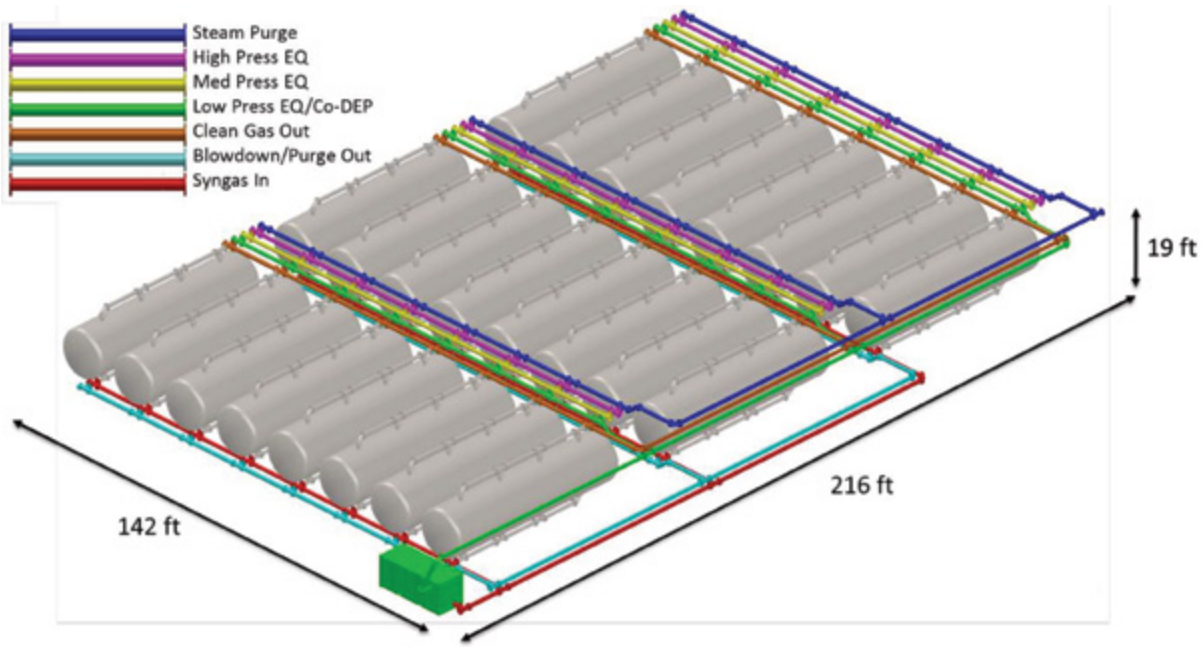

Figure 2: 3-D Layout of TDA's Warm Gas Capture System

technology advantages

- Capturing CO_2 above the dew point of the syngas significantly improves the net plant efficiency.
- Carbon dioxide recovered at pressure reduces compression costs for sequestration.
- A weak CO_2 surface interaction allows fast regenerations at low temperature with the minimal or no heat input.
- Short adsorption/regeneration cycles reduce bed size and weight.

R&D challenges

- Demonstration to the resistance of syngas contaminants.
- Reducing the use of purge gas during regeneration.

results to date/accomplishments

- Completed sorbent optimization.
  - Identified an optimum chemical composition.
  - Production scale-up.
- Demonstrated high CO_2 capacity in bench-scale experiments.
  - Saturation capacity approaching 20 percent wt. CO_2.
  - 6 to 8 percent wt. working capacity.
- Long-term durability was demonstrated through 11,650 cycles.
- For a nominal 600-megawatt (MW) IGCC plant, the CO_2 removal system consists of three trains of eight-bed high-temperature PSA units; total of 24 beds housing the sorbent.
- Fabricated a skid-mounted, four-bed, high-temperature PSA system and successfully carried out demonstrations with syngas from an air-blown gasifier at NCCC (Wilsonville, Alabama) and an O_2-blown gasifier at Wabash River IGCC power plant (Terra Haute, Indiana).
  - Sorbent maintained its performance over 1,030 adsorption/regeneration cycles at NCCC and over 715 cycles at Wabash River IGCC power plant (the same sorbent was used in the two demonstrations).
  - Similar CO_2 capacity was observed before, during, and after testing of the sorbent (altogether, 26,750 standard cubic feet [scf] of syngas has been treated), suggesting minimal impact of syngas impurities due to high-temperature operation.
- System simulation studies carried out in collaboration with UCI, indicates that TDA's CO_2 technology (warm gas CO_2 capture) will provide higher net plant efficiency and lower levelized cost of electricity (COE) than an IGCC plant equipped with Selexol (cold gas capture).
  - TDA's warm gas capture technology achieves a net plant efficiency of 34 percent compared to 31.6 percent for Selexol scrubbing technology
  - Water consumption is also lower, providing a water savings of 8.5 kmol per MWh.
  - Levelized COE, including transportation, storage, and monitoring (TS&M) costs for CO_2, is calculated as $92.9/MWh for TDA's warm gas capture technology compared to $105.2/MWh for Selexol scrubbing technology.

next steps

This project ended on December 31, 2012

available reports/technical papers/presentations

Alptekin, G.; Jayaraman, A.; and Copeland, R., "Low Cost, High Capacity Regenerable Sorbent for Precombustion CO_2 Capture," presented at the 2012 NETL CO_2 Capture Technology Meeting, Pittsburgh, Pennsylvania, July 2012.

Alptekin, G., "A Low Cost, High Capacity Regenerable Sorbent for CO_2 Capture," presented at the International Colloquium on Environmentally Preferred Advanced Power Generation (ICEPAG), Costa Mesa, California, February 2012. *http://www.netl.doe.gov/File%20Library/Events/2012/CO2%20Capture%20Meeting/G-Alptekin-TDA-Research-Pre-combustion-Sorbent.pdf*.

Alptekin, G.; Jayaraman, A.; Dietz, S.; and Schaefer, M., "High Capacity Regenerable Sorbent for Pre-Combustion CO_2 Capture," presented at the 28th Annual International Pittsburgh Coal Conference (IPCC), Pittsburgh, Pennsylvania, September 2011.

Alptekin, G.; Jayaraman, A.; and Copeland, R., "Low Cost, High Capacity Regenerable Sorbent for Precombustion CO_2 Capture," presented at the 2011 NETL CO_2 Capture Technology Meeting, Pittsburgh, Pennsylvania, August 22-26, 2011.

Alptekin, G., "A Low Cost, High Capacity Regenerable Sorbent for CO_2 Capture," presented at the International Colloquium on Environmentally Preferred Advanced Power Generation (ICEPAG), Costa Mesa, California, February 2011.

Alptekin, G.; Jayaraman, A.; Dietz, S.; Brickner, L.; and Tracy, R., "High Capacity Regenerable Sorbent for Pre-Combustion CO_2 Capture," presented at the 27th Annual International Pittsburgh Coal Conference (IPCC), Pittsburgh, Pennsylvania, October 2010.

Alptekin, G.; Jayaraman, A.; and Copeland, R., "Low Cost, High Capacity Regenerable Sorbent," presented at the 2010 NETL CO_2 Capture Technology Meeting, Pittsburgh, Pennsylvania, September 2010. *http://www.netl.doe.gov/publications/proceedings/10/co2capture/presentations/friday/Gokhan%20Alptekin%20-%20FE0000469.pdf*.

Alptekin, G., "A Low Cost, High Capacity Regenerable Sorbent for CO_2 Capture," presented at the Power Plant Air Pollutant Control "MEGA" Symposium, Baltimore, Maryland, August 30 – September 2, 2010.

Alptekin, G., "High Capacity Regenerable Sorbent for Pre-Combustion CO_2 Capture," presented at the American Institute of Chemical Engineer (AIChE) Spring National Meeting, San Antonio, Texas, March 2010.

Alptekin, G., "A Low Cost, High Capacity Regenerable Sorbent for CO_2 Capture," presented at the International Colloquium on Environmentally Preferred Advanced Power Generation (ICEPAG), Costa Mesa, California, February 2010.

Alptekin, G., "A Low Cost, High Capacity Regenerable Sorbent for CO_2 Capture," presented at the Air & Waste Management Association's (A&WMA's) 102nd Annual Conference & Exhibition, Detroit, MI, June 2009.

HIGH-PURITY HYDROGEN PRODUCTION WITH IN-SITU CARBON DIOXIDE AND SULFUR CAPTURE IN A SINGLE-STAGE REACTOR

technology maturity:
Laboratory-Scale

project focus:
Calcium Looping for Hydrogen Production

participant:
Ohio State University-Department of Chemical Engineering

project number:
FC26-07NT43059

NETL project manager:
Jason Hissam
jason.hissam@netl.doe.gov

principal investigator:
Liang Shih Fan
Ohio State University-Department of Chemical Engineering
fan.1@osu.edu

partners:
Clear Skies Consulting
Consol Energy Inc.

performance period:
7/5/07 – 7/31/11

primary project goals

Ohio State University (OSU) set out to develop a Calcium Looping Process (CLP) to enhance hydrogen (H_2) production by integrating the water-gas shift (WGS) reaction with high-temperature carbon dioxide (CO_2), sulfur, and halide removal from synthesis gas (syngas) in a single-stage reactor for applications in large-scale H_2/electricity production from coal in a carbon-constrained scenario.

technical goals

- Reduce steam requirement and operate at near-stoichiometric steam consumption.
- Evaluate the regenerability of the calcium oxide (CaO) sorbent by repeated in-situ carbonation and regeneration for 10 to 100 cycles.
- Demonstrate simultaneous removal of CO_2, sulfur, and halides using a CaO sorbent in the bench-scale, fixed-bed unit.
- Produce either a 90 to 95 percent H_2 stream without WGS catalyst, or a 99+ percent high-purity H_2 stream with WGS catalyst at high temperatures and pressures.
- Demonstrate H_2 production with the sub-pilot-scale testing unit.
- Perform a techno-economic feasibility study for different integrated process scenarios using Aspen modeling.

technical content

The WGS reaction, which converts most of the syngas carbon monoxide (CO) to H_2 and CO_2 by reacting the CO with steam over a bed of catalyst, can be utilized to enhance H_2 production. The excess steam serves to drive the WGS equilibrium toward the products. The reaction is exothermic and, due to equilibrium constraints, typically consists of two stages: (1) high-temperature shift that benefits from high-reaction rates at elevated temperatures; and (2) low-temperature shift that yields more favorable reaction equilibrium.

$$CO + H_2O \leftrightarrow CO_2 + H_2 \quad DH_{rxn} = -41.2\ kJ/mol$$

OSU researchers set out to develop the CLP that combines the WGS reaction and high-temperature, sorbent-based acid gas removal in a single-stage reactor, as shown in Figure 1. By implementing the CLP near the high-temperature reaction zone, syngas cooling and re-heating is no longer required, and the process eliminates the need for the WGS catalyst. A CaO sorbent is used as the circulating material for in-situ removal of CO_2, sulfur, and halides. By incorporating sorbent-based CO_2 removal, not only is a near sequestration-ready stream of CO_2 produced, but plant efficiency and H_2 production are increased by driving the WGS reaction further to completion.

As shown in Figure 2, the CLP is comprised of three reactors: (1) the carbonator, where high-purity H_2 is produced and contaminant removal takes place; (2) the calciner, where the CaO sorbent is regenerated and a sequestration-ready CO_2 stream is produced; and (3) the hydrator, which reactivates the CaO sorbent. The carbonator (either a fixed, fluidized-bed, or an entrained flow reactor) operates at high pressures ranging from 20 to 30 atm and temperatures of 550 to 650°C. The thermodynamic constraint of the WGS reaction is overcome in the carbonation reactor by the incessant removal of the CO_2 product from the reaction mixture, which enhances H_2 production. This is achieved by concurrent WGS reaction and carbonation reaction of CaO to form calcium carbonate ($CaCO_3$), thereby removing the CO_2 product from the reaction mixture and obviating the need for a WGS catalyst and excess steam addition. The CLP does not require syngas pretreatment, because the CaO sorbent also controls hydrogen sulfide (H_2S), hydrogen chloride (HCl), and carbonyl sulfide (COS) to parts-per-billion (ppb) levels. Key parameters for the CaO sorbent are provided in Table 1.

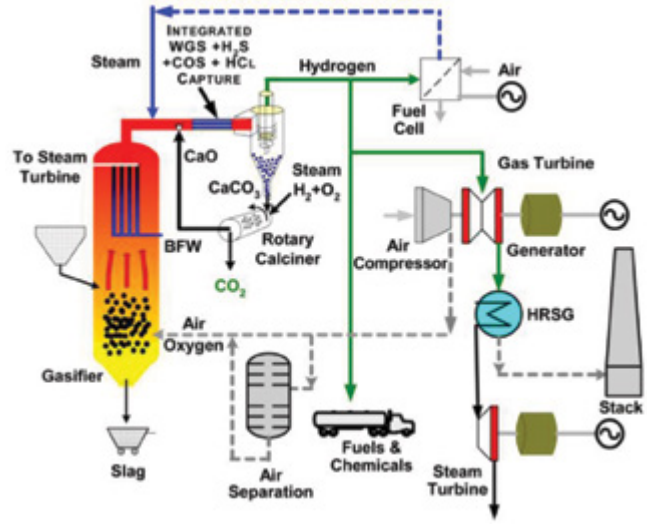

Figure 1: Calcium Looping Process for Enhanced Hydrogen Production with In-Site CO_2 and Sulfur Capture in a Single-Stage Reactor

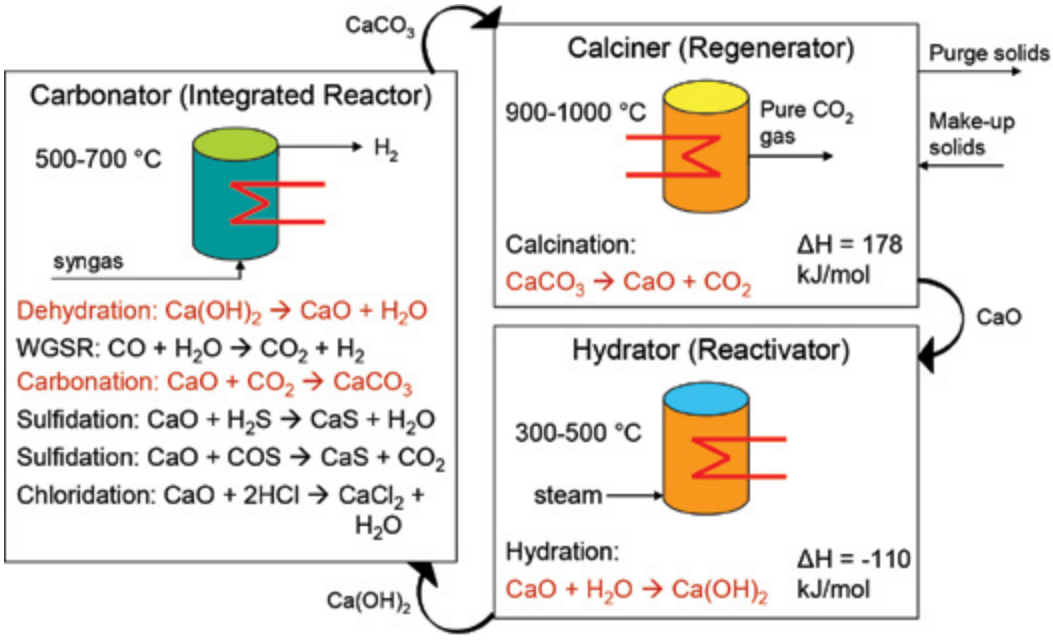

Figure 2: Illustration of the Reaction Schemes in the Calcium Looping Process

The spent sorbent, consisting mainly of $CaCO_3$, is regenerated back to CaO in the calciner, which operates at atmospheric pressure in a rotary, or a fluidized-bed system. Calcination occurs at temperatures above 900°C in the presence of 1 atm CO_2, but CO_2 dilution via steam addition or syngas combustion in a direct-fired calciner permits calcination at lower temperatures. The regenerated CaO sorbent is then conveyed to the hydrator.

The hot solids from the calciner are then hydrated via contact with low-temperature steam in the hydrator. The calcination process causes sorbent sintering, which reduces the sorbent's reactivity; the hydration process reverses this effect by increasing the pore volume and surface area available for reaction with the gas mixture. The calcium hydroxide [Ca(OH)2] decomposes in the carbonator to produce CaO and steam. The steam obtained from the dehydration reaction is used for the WGS reaction. Hence, no excess steam is required in the CLP, as the WGS steam is supplied to the hydrator.

TABLE 1: SOLID SORBENT PARAMETERS

	Units	Current R&D Value	Target R&D Value
Sorbent			
True Density @ STP	kg/m^3		
Bulk Density	kg/m^3		
Average Particle Diameter	mm	.01-.05	.01-.05
Particle Void Fraction	m^3/m^3		
Packing Density	m^2/m^3	$1.289 g/cm^3$	$1.289 g/cm^3$
Solid Heat Capacity @ STP	kJ/kg-K	$0.96(CaO)-1.23(CaCO_3)$	$0.96(CaO)-1.23(CaCO_3)$
Crush Strength	kg_f		
Manufacturing Cost for Sorbent	$/kg		
Adsorption			
Pressure	bar	1-30	1-30
Temperature	°C	600	600
Equilibrium Loading	g mol CO_2/kg		
Heat of Adsorption	kJ/mol CO_2		
Desorption			
Pressure	bar	1	1
Temperature	°C	700-950	700-950
Equilibrium Loading	g mol CO_2/kg		
Heat of Desorption	kJ/mol CO_2		
Proposed Module Design		*(for equipment developers)*	
Flow Arrangement/Operation	-		
Flue Gas Flowrate	kg/hr		
CO_2 Recovery, Purity, and Pressure	percent / percent / bar		
Adsorber Pressure Drop	bar		
Estimated Absorber/Stripper Cost of Manufacturing and Installation	$ / kg/hr		

Definitions:

STP – Standard Temperature and Pressure (15°C, 1 atm).

Sorbent – Adsorbate-free (i.e., CO_2-free) and dry material as used in adsorption/desorption cycle.

Manufacturing Cost for Sorbent – "Current" is market price of material, if applicable; "Target" is estimated manufacturing cost for new materials, or the estimated cost of bulk manufacturing for existing materials.

Adsorption – The conditions of interest for adsorption are those that prevail at maximum sorbent loading, which typically occurs at the bottom of the adsorption column. These may be assumed to be 1 atm total flue-gas pressure (corresponding to a CO_2 partial pressure of 0.13 bar) and 40°C; however, measured data at other conditions are preferable to estimated data.

Desorption – The conditions of interest for desorption are those that prevail at minimum sorbent loading, which typically occurs at the bottom of the desorption column. Operating pressure and temperature for the desorber/stripper are process-dependent. Measured data at other conditions are preferable to estimated data.

Pressure – The pressure of CO_2 in equilibrium with the sorbent. If the vapor phase is pure CO_2, this is the total pressure; if it is a mixture of gases, this is the partial pressure of CO_2. Note that for a typical PC power plant, the total pressure of the flue gas is about 1 atm and the concentration of CO_2 is about 13.2 percent. Therefore, the partial pressure of CO_2 is roughly 0.132 atm or 0.130 bar.

Packing Density – Ratio of the active sorbent area to the bulk sorbent volume.

Loading – The basis for CO_2 loadings is mass of dry, adsorbate-free sorbent.

Flow Arrangement/Operation – Gas-solid module designs include fixed, fluidized, and moving bed, which result in either continuous, cyclic, or semi-regenerative operation.

Estimated Cost – Basis is kg/hr of CO_2 in CO_2-rich product gas; assuming targets are met.

technology advantages

- The removal of CO_2 in the same reactor drives the WGS reaction further to completion, which, due to operation at feed conditions (high temperature and pressure), will increase plant efficiency.
- The process also eliminates the need for a WGS catalyst.
- No separate steps necessary for removal of sulfur and halide impurities.
- High-quality exothermic heat available from all three reactors can be used to generate electricity.

R&D challenges

- Waste disposal.
- Solids handling and transport.
- Design of a high-temperature steam hydrator.

results to date/accomplishments

- Combined WGS, carbonation, and sulfidation reactions conducted in the absence of a catalyst in a bench-scale, fixed reactor.
- Performed detailed parametric investigation in the fixed-bed reactor. Parameters investigated include steam to carbon ratio (S:C), temperature, and pressure. The optimum operating temperature for the carbonator was found to be 600°C. The operating pressure was dependent on desired H_2 purity – 70 percent at 1 atm and greater than 99 percent at 21 atm.
- Developed a novel sorbent reactivation process (high-temperature steam hydration), and achieved sustained reactivity for multiple cycles.
- Based on fixed-bed results, the sub-pilot scale carbonator was designed, constructed, and successfully operated; 70 percent H_2 was achieved in the product with 100 percent CO_2 capture at S:C=3 and Ca:C=1.5, starting with a syngas-like gas mixture in the feed.
- Completed comprehensive techno-economic analyses for CLP integration in different scenarios (coal-to-H_2, integrated gasification combined cycle [IGCC], etc.), and found that CLP can reduce the cost of producing H_2/electricity by 9 to 12 percent when compared to traditional WGS and CO_2 capture technologies in a carbon-constrained scenario.

next steps

This project ended on July 31, 2011.

available reports/technical papers/presentations

Connell, D.P.; Lewandowski, D.; Ramkumar, S.; Phalak, N.; Statnick, R.M.; and Fan, L.-S. "Process simulation and economic analysis of the Calcium Looping Process (CLP) for hydrogen and electricity production from coal and natural gas," Fuel 2013, 103, 383-396.

Phalak, N.; Ramkumar, S.; Deshpande, N.; Wang, A.; Wang, W.; Statnick, R.M.; and Fan, L.-S. "Calcium Looping Process for Clean Coal Conversion: Design and Operation of the Subpilot-Scale Carbonator," Ind. Eng. Chem. Res. 2012, 51, 9938-9944.

Ramkumar, S.; and Fan, L.-S. "Calcium Looping Process (CLP) for Enhanced Noncatalytic Hydrogen Production with Integrated Carbon Dioxide Capture," Energy Fuels 2010, 24, 4408-4418.

Ramkumar, S.; Iyer, M.V.; and Fan, L.-S. "Calcium Looping Process for Enhanced Catalytic Hydrogen Production with Integrated Carbon Dioxide and Sulfur Capture," Ind. Eng. Chem. Res. 2011, 50, 1716-1729.

Sun, Z.; Yu, F.-C.; Li, F.; Li, S.; and Fan, L.-S. "Experimental Study of HCl Capture Using CaO Sorbents: Activation, Deactivation, Reactivation, and Ionic Transfer Mechanism," Ind. Eng. Chem. Res. 2011, 50, 6034-6043.

Ramkumar, S.; and Fan, L.-S. "Thermodynamic and Experimental Analyses of the Three-Stage Calcium Looping Process," Ind. Eng. Chem. Res. 2010, 49, 7563-7573.

HYDROGEN PRODUCTION AND PURIFICATION FROM COAL AND OTHER HEAVY FEEDSTOCKS

primary project goals

The University of North Dakota Energy and Environmental Research Center (UNDEERC) set out to evaluate the ability of various conventional and high-temperature carbon dioxide (CO_2) sorbents to resist the deleterious effects of hydrogen sulfide (H_2S)-containing (sour) synthesis gas (syngas).

technical goals

- Assess the performance of high-temperature and conventional CO_2 sorbents in simulated and real syngas.
- Evaluate the effect of H_2S on solid sorbents when operating in a fixed bed under simulated and real syngas conditions.
- Analyze CO_2 sorbents after exposure to real and simulated syngas.

technical content

Gasification of coal and other heavy feedstocks is becoming an attractive approach for power and chemical production. The solid fuels are transformed into a sour syngas which must be further processed to yield the desired final products (e.g., high-purity hydrogen [H_2] or H_2-rich fuel and a CO_2-rich byproduct). Two types of syngas treatment processes require information on the impact of sour gas species on the solid adsorbents and the ability of these adsorbents to reversibly adsorb H_2S and CO_2: a high-temperature process (400°C) and an ambient-temperature process. .

UNDEERC conducted two major sets of experiments in this program. In Phase I, a 10-bed exposure unit was built and operated, and the impact of a synthetic sour syngas on various high- and low-temperature CO_2 adsorbents was determined. Most of the adsorbents showed an increase in sulfur content and subsequent decrease in surface area and CO_2 adsorption capacity with exposure. Two materials were able to maintain their CO_2 capacity at ambient temperature.

In the next phase of work, these two materials were tested in a fixed-bed skid (Figure 1). The unit consisted of two packed beds, with the necessary valves and heating equipment to permit regeneration by pressure swing adsorption (PSA) or temperature swing adsorption (TSA) cycles.

Breakthrough experiments were conducted with 2 percent H_2S in H_2 feed gas to determine the H_2S adsorption capacity and mass transfer coefficients for the two materials. Hydrogen sulfide adsorption was shown to be reversible and rapid.

Figure 1: Fixed-Bed Reactor Skid

technology maturity:

Laboratory- and Pilot-Scale

project focus:

Hydrogen Production and Purification

participant:

University of North Dakota Energy and Environmental Research Center

project number:

FC26-05NT42465-1.4

NETL project manager:

Arun C. Bose
arun.bose@netl.doe.gov

principal investigator:

Grant Dunham
UNDEERC
gdunham@undeerc.org

partners:

none

performance period:

6/23/05 – 5/31/11

The fixed-bed unit was then connected to UNDEERC's existing lab-scale circulating fluidized-bed gasifier. The gasifier processed Powder River Basin (PRB) sub-bituminous coal spiked with elemental sulfur (S) to generate a syngas with an elevated H_2S concentration. The syngas was continuously fed to the fixed-bed unit (operating in PSA mode) for more than 1,000 cycles. The adsorbent beds were capable of reducing H_2S in the product stream to less than 50 parts per million (ppm). The H_2S capacity of the adsorbent decreased with initial syngas exposure (first couple of hundred cycles), but then remained stable. Post-mortem analysis of the adsorbent showed some deposition of S and chlorine (Cl) species at the front of the bed and capture of organic tar species.

UNDEERC operated the entrained-flow gasifier under oxygen-blown conditions with petcoke feed to generate a second sour syngas feed to the fixed-bed unit. The system was operated under various conditions (temperature and process flow rates) to determine the impact on separation performance. At the end of the testing, the adsorbent was systematically removed and analyzed to monitor changes in capacity/integrity. UNDEERC also modified the exposure unit to allow injection of low levels of iron carbonyl, carbonyl sulfide, and hydrogen fluoride. Impact of exposure was determined for the most promising adsorbent to date.

technology advantages

High-temperature acid gas (H_2S and CO_2) removal from integrated gasification combined cycle (IGCC) syngas streams has the potential to increase the net power system efficiency by maintaining a high- temperature, high-moisture feed stream to the combustion turbine power cycle. These advantages also hold for applications that utilize the syngas for coproducing hydrogen, fuels, or chemicals. Energy losses through syngas cooling and re-heating resulting from cool acid gas removal (such as Rectisol® or Selexol™) are prevented with high-temperature separation.

An ambient-temperature acid gas separation process based on adsorption would also be attractive relative to typical liquid absorption-based processes because of reductions in steam consumption and capital cost.

R&D challenges

The physical/chemical stability of the adsorbents in a sour syngas environment remains a concern, as does the ultimate fate of trace components (mercury, Cl, particulate matter) and the reversibility of heavy component (tars) adsorption.

results to date/accomplishments

- Identified two promising ambient-temperature adsorbents that exhibited little CO_2 capacity loss after sour syngas exposure.
- Conducted H_2S breakthrough experiments, both with and without CO_2, which showed that the most promising adsorbent is selective for H_2S over CO_2, the mass transfer rate of H_2S is described by macropore diffusion, and H_2S adsorption is reversible.
- Operated the fixed-bed test unit in PSA mode with coal-based syngas produced in a circulating fluidized-bed gasifier. Demonstrated that H_2S and CO_2 can be effectively rejected from the sour syngas. Completed roughly 1,500 adsorption/regeneration cycles. Showed that the H_2S capacity initially dropped, but then leveled off at approximately 80 percent of the fresh capacity.
- Conducted postmortem analysis of adsorbent to determine progression of Cl, S, and organics into bed. Chlorine and sulfur were limited to the first few inches of the bed. Organics were found to penetrate deeper, and are thought to be responsible for the initial drop in H_2S capacity.
- Operated a second batch of adsorbent in the fixed-bed unit with syngas generated from petroleum coke in an entrained-flow gasifier. Observed negligible levels of organics in the syngas. Completed more than 1,000 adsorption/regeneration cycles with no indication of H_2S capacity loss.

next steps

This project ended on May 31, 2011.

available reports/technical papers/presentations

"Hydrogen Production and Purification from Coal and Other Heavy Feedstocks - Final Topical Report" May 2011.

INTEGRATED WARM GAS MULTI-CONTAMINANT CLEANUP TECHNOLOGIES FOR COAL-DERIVED SYNGAS

primary project goals

Research Triangle Institute (RTI) set out to develop a modular warm, multi-contaminant synthesis gas (syngas) cleaning system that can be adapted to meet the specifications for both power and chemical/fuels production.

technical goals

- Develop a modular high-temperature (150 to 370°C or 300 to 700°F) and high-pressure (up to 83 atm or 1,200 pounds per square inch gauge [psig]) cleanup process that produces an effluent syngas suitable for chemical/fuels production by controlling trace contaminants to the levels shown in Table 1.

TABLE 1: TARGETED CONTROL LEVELS FOR SYNGAS CONTAMINANTS

Contaminant	Control Level	Contaminant	Control Level
Sulfur (S)	< 50 ppbw	Selenium (Se)	0.2 ppm
Ammonia (NH_3)	10 ppm	Arsenic (As)	5 ppb
Chlorine (Cl)	10 ppb	Phosphorus (P)	< 20 ppbw
Mercury (Hg)	5 ppbw		

- Utilize a transport reactor and regenerable sorbents to control bulk syngas contaminants, such as hydrogen sulfide (H_2S), carbonyl sulfide (COS), ammonia (NH_3), and hydrogen chloride (HCl).
- Evaluate the performance of high-temperature carbon dioxide (CO_2) sorbents and promoters.

technical content

In this project, RTI worked on developing a sequential process where high-temperature syngas is cleaned using a transport reactor and a multi-functional fixed-bed system. The system is designed to operate at syngas feed conditions (150 to 370°C [300 to 700°F]) and 28 to 83 atm (400 to 1,200 psig), which will improve plant efficiency by eliminating the need for syngas cooling and re-heating. RTI's novel warm syngas cleaning technology could represent a significant improvement for chemical/fuels production applications due to reduced capital and operating costs; however, development and optimization for trace contaminant removal and warm CO_2 capture is needed to achieve the target syngas specifications for both power (integrated gasification combined cycle [IGCC] applications) and chemical/fuels production.

The bulk contaminant removal system consists of a transport reactor containing regenerable sorbents that target H_2S, COS, NH_3, and HCl. RTI investigated three sorbents: (1) RTI-3 for sulfur; (2) CBV-712 for NH_3; and (3) a sodium carbonate-based sorbent for chlorine.

technology maturity:
Bench-Scale

project focus:
Warm Gas Cleanup

participant:
Research Triangle Institute

project number:
FC26-05NT42459

NETL project manager:
K. David Lyons
k.david.lyons@netl.doe.gov

principal investigator:
Brian S. Turk
Research Triangle Institute
bst@rti.org

partners:
Nexant

performance period:
05/12/05 – 09/30/10

Syngas leaving the transport reactor is routed to a multi-functional, fixed sorbent bed that reduces contaminants to parts per billion by volume (ppbv) levels.

RTI employed the modified, high-pressure thermal gravimetric analyzer (TGA), shown in Figure 1, and a microreactor system to evaluate the performance of high-temperature CO_2 sorbents. The bench-scale CO_2 sorbent testing campaign included experiments with lithium orthosilicate (Li_4SiO_4) and magnesium oxide (MgO) sorbents, as well as several promoters and support structures. RTI's Li_4SiO_4 sorbent exhibited a CO_2 adsorption capacity of about 35 wt percent at high temperatures, but a technical-economic analysis concluded that the regeneration stage is prohibitively expensive.

Figure 1: Modified TGA for CO_2 Sorbent Testing

Meanwhile, a promoted MgO sorbent demonstrated a CO_2 capacity of nearly 60 wt percent and the ability to be regenerated at a CO_2 partial pressure of about 150 psig. RTI developed a knowledge base for the promoted MgO sorbent and focused research on fundamental issues, including sorbent preparation procedures, sorbent support structures and binders, and syngas pretreatment requirements.

TABLE 1: CO_2 SOLID SORBENT PARAMETERS

	Units	Current R&D Value	Target R&D Value
Sorbent			
True Density @ STP	kg/m^3		
Bulk Density	kg/m^3		
Average Particle Diameter	mm		
Particle Void Fraction	m^3/m^3		
Packing Density	m^2/m^3		
Solid Heat Capacity @ STP	kJ/kg-K		
Crush Strength	kg_f		
Manufacturing Cost for Sorbent	$/kg		
Adsorption			
Pressure	bar	≈24	40
Temperature	°C	350-450	350-450
Equilibrium Loading	g mol CO_2/kg		
Heat of Adsorption	kJ/mol CO_2		
Desorption			
Pressure	bar		
Temperature	°C		
Equilibrium Loading	g mol CO_2/kg		
Heat of Desorption	kJ/mol CO_2		
Proposed Module Design		*(for equipment developers)*	
Flow Arrangement/Operation	-		
Flue Gas Flowrate	kg/hr		
CO_2 Recovery, Purity, and Pressure	percent / percent / bar		
Adsorber Pressure Drop	bar		
Estimated Absorber/Stripper Cost of Manufacturing and Installation	$ / kg/hr		

Definitions:

STP – Standard Temperature and Pressure (15°C, 1 atm).

Sorbent – Adsorbate-free (i.e., CO_2-free) and dry material as used in adsorption/desorption cycle.

Manufacturing Cost for Sorbent – "Current" is market price of material, if applicable; "Target" is estimated manufacturing cost for new materials, or the estimated cost of bulk manufacturing for existing materials.

Adsorption – The conditions of interest for adsorption are those that prevail at maximum sorbent loading, which typically occurs at the bottom of the adsorption column. These may be assumed to be 1 atm total flue-gas pressure (corresponding to a CO_2 partial pressure of 0.13 bar) and 40°C; however, measured data at other conditions are preferable to estimated data.

Desorption – The conditions of interest for desorption are those that prevail at minimum sorbent loading, which typically occurs at the bottom of the desorption column. Operating pressure and temperature for the desorber/stripper are process-dependent. Measured data at other conditions are preferable to estimated data.

Pressure – The pressure of CO_2 in equilibrium with the sorbent. If the vapor phase is pure CO_2, this is the total pressure; if it is a mixture of gases, this is the partial pressure of CO_2. Note that for a typical pulverized coal (PC) power plant, the total pressure of the flue gas is about 1 atm and the concentration of CO_2 is about 13.2 percent. Therefore, the partial pressure of CO_2 is roughly 0.132 atm or 0.130 bar.

Packing Density – Ratio of the active sorbent area to the bulk sorbent volume.

Loading – The basis for CO_2 loadings is mass of dry, adsorbate-free sorbent.

Flow Arrangement/Operation – Gas-solid module designs include fixed, fluidized, and moving bed, which result in either continuous, cyclic, or semi-regenerative operation.

Estimated Cost – Basis is kg/hr of CO_2 in CO_2-rich product gas; assuming targets are met.

In parallel with this experimental program, RTI investigated potential process configurations and operating conditions to exploit the attributes of the promoted MgO sorbent. Research was geared toward developing a suitable fluidized version of the sorbent to facilitate sorbent transport between the adsorption and stripping columns, while also improving the heat transfer coefficient of the sorbent bed. RTI also worked to identify the temperature window between adsorption and regeneration that maximizes the sorbent's CO_2 working capacity, while minimizing the sensible heating requirement. In addition, RTI explored techniques to reuse the high-quality heat generated during the high-temperature CO_2 adsorption process, (e.g., transferring the high-quality heat to the steam cycle to generate additional power, or replacing a portion of the steam generated in the radiant syngas cooler).

technology advantages

Warm syngas cleanup will increase IGCC net power plant efficiency by eliminating the need for syngas cooling and re-heating, while also producing an effluent syngas suitable for chemical/fuels production and high-purity CO_2 for storage.

R&D challenges

Integration and scale-up of the bench-scale transport reactor and multi-functional fixed-bed system, as well as startup and standby options for the warm syngas cleanup technologies.

results to date/accomplishments

- Technical support provided to U.S. Department of Energy (DOE)/National Energy Technology Laboratory (NETL) researchers has resulted in a computational fluid dynamics (CFD) model that predicts temperature and differential pressure profiles similar to actual pilot plant results.

- Demonstrated that combustion products (CO_2, steam, and carbon monoxide [CO]) do not adversely affect the desulfurization performance of RTI-3.
- Adapted existing bench-scale testing system to support phosphine (in addition to arsine and hydrogen selenide) testing.
- Developed a coconut-based charcoal as a quality control cartridge for supporting mass balance determination during phosphine testing.
- Identified a family of promoters that increased the CO_2 capacity of the MgO sorbent from <2 wt percent to 40 to 60 wt percent.
- Completed a technical-economic analysis of warm CO_2 capture using RTI's Li_4SiO_4 sorbent, which concluded that the regeneration stage is prohibitively expensive.
- Independent system analysis by both Nexant and Noblis indicate that RTI's warm syngas cleaning system can yield a three- to four-point increase in the net higher heating value (HHV) thermal efficiency and a 10 to 15 percent reduction in capital costs, compared to an IGCC plant equipped with Selexol™ for acid gas removal.
- Identified a new process configuration/operating cycle that demonstrates technical and economic promise and achieves 82 to 87 percent CO_2 capture with warm Mgo-based sorbent CO_2 capture.
- Demonstrated that the operational cycle (higher adsorption temperature than regeneration temperature) is valid.
- Demonstrated the potential to achieve low effluent CO_2 concentrations (≈100 parts per million by volume [ppmv]) with Mgo-based sorbents at pressures from 150 to 325 psig.
- Completion of preliminary techno-economic evaluations by RTI and Noblis for multiple warm CO_2 capture processes with RTI's promoted MgO sorbents demonstrating a slight thermal efficiency advantage.

next steps

This project ended on September 30, 2010.

available reports/technical papers/presentations

Turk, B.; Gupta, R.; Sharma, P.; Albritton, J.; and Jamal, A., "Integrated Warm Gas Multicontaminant Cleanup Technologies for Coal-Derived Syngas," Final Technical Report, March 2012.

Gupta, R.; Jamal, A.; Turk, B.; and Leseman, M., "Scaleup and Commercialization of Warm Syngas Cleanup Technology with Carbon Capture and Storage," presented at the 2010 Gasification Technologies Conference, Washington, DC, October 2010.

Gupta, R.; Turk, B.; and Leseman, M., "RTI/Eastman Warm Syngas Clean-up Technology: Integration with Carbon Capture," presented at the 2009 Gasification Technologies Conference, Colorado Springs, Colorado, October 2009.

Turk, B., et.al, "Warm Syngas Cleanup for Chemical Applications using Regenerable CO_2 Sorbents," presented at the 26th International Pittsburgh Coal Conference, Pittsburgh, Pennsylvania, September 2009.

"High Temperature CO_2 Capture from Syngas for Gasification Applications," presented at the Eighth Annual Carbon Capture & Sequestration Conference, Pittsburgh, PA, May 2009.

Turk, B., et.al, "Development of a Warm Gas Cleanup Technology Platform for Power and Chemicals Production," presented at the Pittsburgh Coal Conference, Pittsburgh, PA, September 2008.

NOVEL SORPTION ENHANCED REACTION PROCESS FOR SIMULTANEOUS PRODUCTION OF CO_2 & H_2 FROM SYNTHESIS GAS PRODUCED BY COAL GASIFICATION

technology maturity:
Laboratory-Scale

project focus:
Sorption Enhance Reaction Process

participant:
Lehigh University

project number:
FC26-05NT42455

NETL project manager:
Jason Hissam
jason.hissam@netl.doe.gov

principal investigator:
Shivaji Sircar
Lehigh University
shs3@lehigh.edu

partners:
N/A

performance period:
5/25/05 – 6/4/10

primary project goals

Lehigh University has evaluated the feasibility of the novel thermal swing sorption enhanced reaction (TSSER) process to simultaneously separate carbon dioxide (CO_2) and carry out the water-gas shift (WGS) reaction as a single-unit operation in a fixed-bed reactor.

technical goals

While evaluating the feasibility of the TSSER process through experiments and process modeling, develop a sorbent that exhibits:

- High selectivity of CO_2 in the presence of steam at 200 to 500°C.
- Adequate CO_2 working capacity at the reaction temperature.
- Low heat of adsorption for reversible CO_2 sorption and desorption.
- Adequately fast kinetics of CO_2 sorption and desorption.
- Thermal stability.

technical content

The WGS reaction, which converts most of the synthesis gas (syngas) carbon monoxide (CO) to hydrogen (H_2) and CO_2 by reacting the CO with water over a bed of catalyst, can be utilized to enhance H_2 production at an integrated gasification combined cycle (IGCC) plant. The excess steam serves to drive the shift equilibrium toward the products. The reaction is exothermic and, due to equilibrium constraints, typically consists of two stages: (1) high-temperature shift that benefits from high-reaction rates at elevated temperatures; and (2) low-temperature shift that yields more favorable reaction equilibrium.

$$CO + H_2O \leftrightarrow CO_2 + H_2 \; \Delta H_{rxn} = -41.2 \text{ kJ/mol}$$

The TSSER process (Figure 1), under development by Lehigh University, simultaneously carries out the WGS reaction and the separation of CO_2 as a single-unit operation in a sorber-reactor (Step A). According to this process, the syngas from the coal gasifier (after removal of sulfur impurities) is introduced to a sorber-reactor, which is packed with an admixture of a WGS catalyst and a CO_2 sorbent that can selectively sorb CO_2 in the presence of excess steam. Removal of CO_2 (for geological storage) from the reaction zone drives the reversible reaction to the product side (circumventing equilibrium limits) and enhances the forward reaction rate.

An essentially pure (fuel cell grade) stream of H_2 (dry basis) is produced at feed gas pressure. The sorbed CO_2 is periodically removed (regeneration) by counter-currently purging the reactor with superheated steam at feed gas and near-ambient pressures, as well as at a temperature higher than that of the feed step. An intermediate step of co-current CO_2 rinse at feed gas pressure prior to the regeneration step produces an essentially pure CO_2 stream at high pressure. This significantly reduces CO_2 compression costs.

Two novel CO_2 sorbents have been identified as candidates for the TSSER concept, and key parameters for the optimal CO_2 sorbent are provided in Table 1.

- Potassium carbonate (K_2CO_3)-promoted hydrotalcite (400 to 550°C).
- Sodium oxide (Na_2O)-promoted alumina (200 to 550°C).

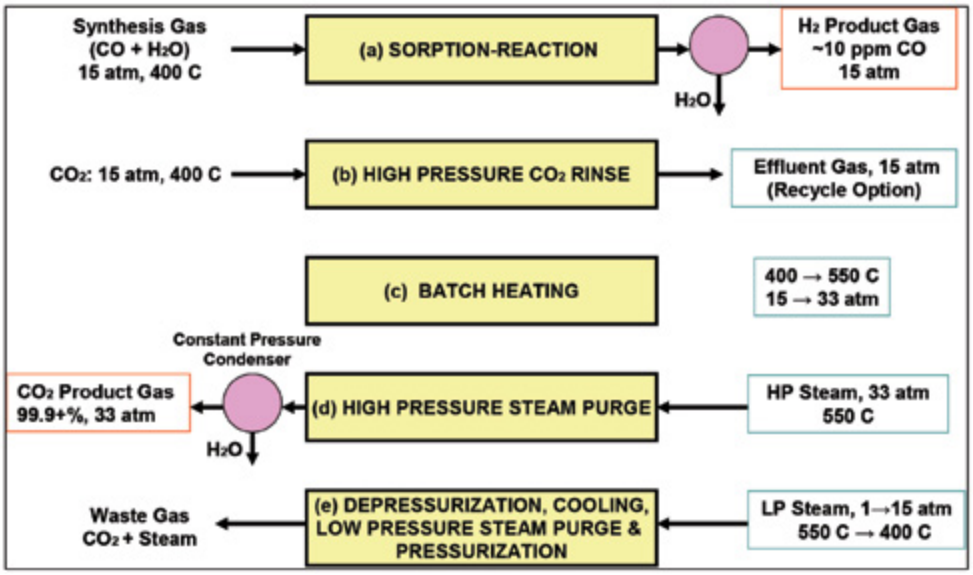

Figure 1: Components of the TSSER Process

This research project includes retrofitting an existing single-column sorption apparatus for measurement of high-pressure CO_2 adsorption characteristics; measurement of high-pressure CO_2 adsorption equilibria, kinetics, and sorption/desorption column dynamic characteristics under the conditions of thermal swing operation of the TSSER process; experimental evaluation of the individual steps of the TSSER process; development of a detailed mathematical model for simulating the performance of the individual steps of the TSSER process for optimization, process scale-up, and for guiding future work; simulation and testing of the TSSER concept using a realistic syngas composition; demonstration of the thermal stability of sorbents using a thermogravimetric analysis (TGA) apparatus; and evaluating the effects of sulfur compounds (hydrogen sulfide [H_2S]) present in coal-derived syngas on the CO_2 sorbents.

TABLE 1: PROCESS PARAMETERS

	Units	Current R&D Value	Target R&D Value
Sorbent			
True Density @ STP	kg/m^3		
Bulk Density	kg/m^3		
Average Particle Diameter	mm	1.5	1.5
Particle Void Fraction	m^3/m^3		
Packing Density	m^3/m^3	0.694	0.694
Solid Heat Capacity @ STP	m^2/m^3	1.05	1.05
Crush Strength	kJ/kg-K		
Manufacturing Cost for Sorbent	kg_f		

TABLE 1: PROCESS PARAMETERS

	Units	Current R&D Value	Target R&D Value
Adsorption			
Pressure	bar	Up to ≈25	Up to ≈25
Temperature	°C	200-400	200-400
Equilibrium Loading	g mol CO_2/kg-sorbent		
Heat of Adsorption	kJ/mol CO_2	64.9	64.9
Desorption			
Pressure	bar	Up to 40	
Temperature	°C	550	550
Equilibrium Loading	g mol CO_2/kg-sorbent		
Heat of Desorption	kJ/mol CO_2		
Proposed Module Design		*(for equipment developers)*	
Flow Arrangement/Operation	-		
Flue Gas Flowrate	kg/hr		
CO_2 Recovery, Purity, and Pressure	percent / percent / bar		
Adsorber Pressure Drop	bar		
Estimated Absorber/Stripper Cost of Manufacturing and Installation	$\frac{\$}{\text{kg/hr}}$		

Definitions:

STP – Standard Temperature and Pressure (15°C, 1 atm).

Sorbent – Adsorbate-free (i.e., CO_2-free) and dry material as used in adsorption/desorption cycle.

Manufacturing Cost for Sorbent – "Current" is market price of material, if applicable; "Target" is estimated manufacturing cost for new materials, or the estimated cost of bulk manufacturing for existing materials.

Adsorption – The conditions of interest for adsorption are those that prevail at maximum sorbent loading, which typically occurs at the bottom of the adsorption column. These may be assumed to be 1 atm total flue-gas pressure (corresponding to a CO_2 partial pressure of 0.13 bar) and 40°C; however, measured data at other conditions are preferable to estimated data.

Desorption – The conditions of interest for desorption are those that prevail at minimum sorbent loading, which typically occurs at the bottom of the desorption column. Operating pressure and temperature for the desorber/stripper are process-dependent. Measured data at other conditions are preferable to estimated data.

Pressure – The pressure of CO_2 in equilibrium with the sorbent. If the vapor phase is pure CO_2, this is the total pressure; if it is a mixture of gases, this is the partial pressure of CO_2. Note that for a typical pulverized coal (PC) power plant, the total pressure of the flue gas is about 1 atm and the concentration of CO_2 is about 13.2 percent. Therefore, the partial pressure of CO_2 is roughly 0.132 atm or 0.130 bar.

Packing Density – Ratio of the active sorbent area to the bulk sorbent volume.

Loading – The basis for CO_2 loadings is mass of dry, adsorbate-free sorbent.

Flow Arrangement/Operation – Gas-solid module designs include fixed, fluidized, and moving bed, which result in either continuous, cyclic, or semi-regenerative operation.

Estimated Cost – Basis is kg/hr of CO_2 in CO_2-rich product gas; assuming targets are met.

technology advantages

The simultaneous removal of CO_2 drives the WGS reaction to completion, which, along with operation at feed conditions (high temperature and pressure), will increase plant efficiency. Regeneration via thermal swing with steam maximizes the CO_2 working capacity of the sorbent, while eliminating H_2 losses that occur during system purging with pressure swing adsorption processes. The TSSER process also produces high-purity H_2 and CO_2 streams.

R&D challenges

- Qualitative results suggest that the chemisorbents cannot be exposed to trace sulfur dioxide (SO_2) or H_2S impurities in the TSSER feed gas, and they must be removed by a conventional method such as selective sorption on zinc oxide (ZnO) employing a pretreatment system.
- A considerable amount of time is required to regenerate the sorbents via thermal swing cycling.

results to date/accomplishments

- Retrofitted and debugged an existing test apparatus for high-pressure operation.
- Characterized the CO_2 sorbents at high pressures, including measurement of isotherms, kinetics, and sorption/desorption column dynamics for CO_2 adsorption from nitrogen (N_2).
- Ascertained the thermal stability of the sorbents.
- Evaluated isothermal and isobaric high-pressure desorption of CO_2 by N_2 purge.
- Developed a CO_2 adsorption isotherm model for use in data analysis and process simulation.
- Developed a process model for data correlation and process simulation.
- Evaluated the performance of each step of the TSSER process.
- Identified Na_2o-promoted alumina as the best available CO_2 sorbent for the TSSER process.

next steps

This project ended on June 4, 2010.

available reports/technical papers/presentations

Sircar, S., et.al, "Novel Sorption Enhanced Reaction Process for Simultaneous Production of CO_2 and H_2 from Synthesis Gas Produced by Coal Gasification," June 2010, Final Report. *http://www.osti.gov/bridge/servlets/purl/1035862/1035862.pdf*.

Lee, K.B., et.al, "Chemisorption of CO_2 on Potassium Carbonate Promoted Hydrotalcite," J. Colloid Interface Sci., 308, 30 (2007).

Lee, K. B, et.al, "Chemisorption of CO_2 on Sodium Oxide promoted Alumina," AIChE J., 53, 2824 (2007).

Lee, K. B, et.al, "Effect of Reaction Temperature on the Performance of Thermal Swing Sorption Enhanced Process for Simultaneous Production of Fuel-Cell Grade H_2 and Compressed CO_2 from Synthesis Gas," Ind. Eng. Chem. Res., 47(17), 6759 (2008).

Lee, K. B, et.al, "Novel Thermal Swing Sorption Enhanced Reaction Process Concept for H_2 Production by Low Temperature Steam-Methane Reforming," Ind. Eng. Chem. Res., 46, 5003 (2007).

Lee, K. B, et.al, "Performance of Na_2O Promoted Alumina as CO_2 Chemisorbent in Sorption Enhanced Reaction Process for Simultaneous Production of Fuel-Cell Grade H_2 and Compressed CO_2 from Synthesis Gas," J. Power Sources, 176, 312 (2008).

Lee, K. B, et.al, "Production of Fuel-Cell Grade H_2 by Thermal Swing Sorption Enhanced Reaction Concept," Int. J. Hydrogen Energy, 33, 781 (2008).

Lee, K. B, et.al, "Reversible Chemisorption of Carbon Dioxide: Simultaneous Production of Fuel-Cell Grade H_2 and Compressed CO_2 from Synthesis Gas," Adsorption, 13, 385 (2007).

Lee, K.B., et.al, "Reversible Chemisorbents for Carbon Dioxide and Their Potential Applications," Ind. Eng. Chem. Res., 47, 8048 (2008).

Beaver, M. G., et.al, "Rapid thermal swing sorption enhanced (RTSSER) concepts for production of fuel cell grade H_2" Chapter 4 in Sorption Enhanced Reaction Concepts for Hydrogen Production: Materials and Processes, S. Sircar and K. B. Lee (eds), Research Signpost, Kerala, India (2010).

Beaver, M.G., Caram, H.S., Sircar, S., "Selection of CO_2 chemisorbent for fuel-cell grade H_2 production by sorption-enhanced water gas shift reaction," Int. J. Hydrogen Energy, 34, 2972 (2009).

Beaver, M. G., Caram, H. S., Sircar, S.," Sorption Enhanced Reaction Process for Direct Production of Fuel Cell Grade Hydrogen by Low Temperature Catalytic Steam- Methane Reforming," J. Power Sources, 195, 1998-2002, (2009).

Beaver, M. G., et.al, "Effect of Reaction Temperature on Performance of Thermal Swing Sorption Enhanced Reaction Process for Simultaneous Production of Fuel-Cell Grade H_2 and Compressed CO_2 from Synthesis Gas," Presented at 25th International Pittsburgh Coal Conference, Pittsburgh, Pennsylvania, September 2008 and at AIChE Annual Meeting, Philadelphia, November 2008.

Beaver, M. G., et.al, "Utilization of High Temperature CO_2 Chemisorbents in Sorption Enhanced Reaction Concepts for Production of Fuel Cell Grade H_2 from Fossil Fuel Feedstocks," Presented at 26th International Pittsburgh Coal Conference on September 2009.

"Selection of CO_2 Chemisorbent for Fuel-Cell Grade H_2 Production by Sorption Enhanced Water-Gas-Shift & Steam- Methane-Reforming Reaction," Presented at American Institute of Chemical Engineering Annual Meeting, Nashville, Tennessee, November 2009.

HYDROGEN PRODUCTION USING WATER-GAS SHIFT CATALYST WITH CO_2 SORBENTS

technology maturity:

Bench-Scale, Using Simulated Syngas

project focus:

Sorbent Enhanced Water-Gas Shift

participant:

University of North Dakota Energy and Environmental Research Center (UNDEERC)

project number:

FC26-98FT40320-03.13

NETL project manager:

Edgar Klunder
edgar.klunder@netl.doe.gov

principal investigator:

Michael L. Swanson
UNDEERC
mswanson@undeerc.org

partners:

N/A

performance period:

4/1/05 – 3/31/09

primary project goals

The University of North Dakota Energy & Environmental Research Center (UNDEERC) set out to develop a high-temperature carbon dioxide (CO_2) sorbent to enhance the water-gas shift (WGS) reaction and produce a synthesis gas (syngas) stream that is at least 90 percent hydrogen (H_2) on a nitrogen-free basis.

technical goals

- Develop hydrotalcite sorbent briquettes and determine the required chemical composition for optimal WGS and CO_2 capture conditions.
- Test a pressure swing absorber on a continuous fluidized-bed reactor (CFBR) gasification system.
- Test lithium silicate and hydrotalcite sorbents in a bench-scale, heated fixed-bed reactor using a slipstream from the CFBR gasification system.
- Determine the optimum high-temperature CO_2 sorbent.

technical content

The WGS reaction, which converts most of the syngas carbon monoxide (CO) to H_2 and CO_2 by reacting the CO with steam over a bed of catalyst, can be utilized to enhance H_2 production at an integrated gasification combined cycle (IGCC) plant. The excess steam serves to drive the shift equilibrium toward the products. The reaction is exothermic and, due to equilibrium constraints, typically consists of two stages: (1) high-temperature shift that benefits from high reaction rates at elevated temperatures; and (2) low-temperature shift that yields more favorable reaction equilibrium.

$$CO + H_2O \leftrightarrow CO_2 + H_2 \quad \Delta Hrxn = -41.2 \text{ kJ/mol}$$

The sorption-enhanced WGS (SEWGS) process, which combines a high-temperature CO_2 sorbent and a WGS catalyst in a packed-bed reactor that can operate at high temperature and pressure, represents one approach to further promote H_2 production. The SEWGS reactor consists of an initial adsorbent bed to remove inherent CO_2 from the syngas, followed by a second bed wherein the WGS reaction occurs as the CO_2 produced during the reaction is simultaneously captured by the adsorbent bed. Regeneration of the saturated adsorbent bed is accomplished by pressure swing absorption. By incorporating sorbent-based CO_2 removal, not only is a near capture-ready stream of CO_2 produced, but the efficiency of the plant is increased by driving the WGS reaction further to completion.

By routing a slipstream from the CFBR gasification system to the bench-scale, heated fixed-bed reactors shown in Figure 1, UNDEERC evaluated the performance of high-temperature lithium orthosilicate (Li_4SiO_4) and hydrotalcite CO_2 sorbents in the SEWGS process. Hydrotalcites are anionic clays with positively charged brucitelike (Mg[OH]2) layers and inter layers of anions such as carbonates. Although the hydrotalcite sorbent did exhibit some enhanced WGS properties during bench-scale testing, the sorbent is unlikely

to be a cost-effective option for IGCC power plants due to the observed low CO_2 adsorption capacity and the long purge cycles required for regeneration.

UNDEERC also compared the performance of two Li_4SiO_4 sorbents provided by Toshiba and Research Triangle Institute (RTI). Lithium orthosilicate, which reacts with CO_2 via the following reversible reaction, has exhibited a CO_2 adsorption capacity of approximately 35 percent (based on sorbent weight) at high temperatures.

$$Li_4SiO_4 + CO_2 \leftrightarrow Li_2CO_3 + Li_2SiO_3 \quad \Delta Hrxn = -142.8 \text{ kJ/mol}$$

As shown in Table 1, the Toshiba sorbent demonstrated superior adsorption at elevated temperatures, whereas the sorbent supplied by RTI showed higher adsorption capacity at relatively lower temperatures. One notable pattern is the sorbent provided by Toshiba demonstrated a reduction in adsorption capacity with decreasing CO_2 concentrations, eventually leading to inferior adsorption at higher temperatures as compared to RTI's sorbent.

Figure 1: Heated Fixed-Bed Reactors

Additionally, it was found that RTI's sorbent had slightly better desorption properties with complete desorption taking place at 700°C, whereas Toshiba's sorbent required temperatures as high as 800°C to attain complete desorption in a 100 percent nitrogen atmosphere.

TABLE 1: COMPARISON OF ADSORPTION PROPERTIES OF SORBENTS PROVIDED BY TOSHIBA AND RTI

	100 percent CO_2		40 percent CO_2		20 percent CO_2	
Temperature (°C)	Adsorption (wt percent)		Adsorption (wt percent)		Adsorption (wt percent)	
	Toshiba	RTI	Toshiba	RTI	Toshiba	RTI
400	1.32	4.33	0.89	2.48	0.69	1.43
500	19.32	14.10	18.04	12.48	15.89	14.10
600	23.26	15.22	19.87	14.04	18.61	14.39
700	33.32	15.88	31.68	-	2.41	8.97
800	3.46	-	1.45	-	1.31	-

technology advantages

The simultaneous removal of CO_2 drives the WGS reaction to completion, which, along with operation at feed conditions (high temperature and pressure), will increase IGCC power plant efficiency by maintaining a high-temperature, high-pressure feed gas to the combustion turbine. The Li_4SiO_4 sorbents exhibit high CO_2 adsorption capacity at elevated temperatures and effectiveness across a wide range of CO_2 concentrations.

R&D challenges

A considerable amount of time is required to regenerate a Li_4SiO_4 sorbent that, when coupled with the large quantity of sorbent required, imposes significant limitations for industrial use.

results to date/accomplishments

- Completed testing of a pressure swing absorber on a continuous fluid-bed gasification system.
- Produced 20 wt percent potassium carbonate/80 wt percent hydrotalcite briquettes.
- Completed testing of Li_4SiO_4 sorbents in heated fixed-bed reactors using a slipstream from the CFBR gasification system, and determined the physical strength in high-moisture atmospheres and the CO_2 adsorption capacity of the sorbents at various operating conditions.

next steps

This project ended on March 31, 2009.

available reports/technical papers/presentations

Base Research Program – Final Report, August 2009.

HIGH-DENSITY ACTIVATED CARBON FOR HIGH-PRESSURE HYDROGEN PURIFICATION

primary project goals

The University of North Dakota Energy and Environmental Research Center (UNDEERC) set out to develop high-density, electrically conductive monolithic-activated carbon for use in a high-pressure swing adsorber to produce hydrogen (H_2) and sequestration-ready carbon dioxide (CO_2) from gasification synthesis gas (syngas).

technical goals

- Prepare a high-density, electrically conductive monolithic-activated carbon sorbent for H_2/CO_2 separation.
- Measure adsorptivity, pressure drop, and electrical conductivity (for regeneration) of monolith.
- Determine the feasibility of using activated carbons as CO_2 sorbents in gasification syngas.

technical content

UNDEERC worked with SGL Carbon to produce a monolithic, high-density activated carbon sorbent for use in high-pressure swing adsorbers to separate H_2 and CO_2 in a high-pressure syngas stream, while maintaining the pressure of the H_2 near that of the incoming syngas. By producing and purifying the H_2 from liquid feedstocks at high pressure, the associated cost of compressing the H_2 is reduced. This process, if employed at an integrated gasification combined cycle (IGCC) power plant, could potentially be used to produce high-purity CO_2 for storage.

As syngas passes through the activated carbon adsorbers, CO_2 is adsorbed onto the surface of the material, leaving relatively pure H_2 to pass through. Once saturated, the adsorbers can possibly be regenerated by passing an electrical current through it at constant pressure. Oak Ridge National Laboratory (ORNL) has worked to develop such a process and has produced a continuous, low-density, porous, fiber-reinforced activated carbon. By being continuous, it can conduct electricity at low voltage and can be sealed in a horizontal container that will not allow gas bypass. However, when used at high pressures, the high pore volume requires significant H_2 for backflushing. UNDEERC attempted to significantly increase the density of the carbon monolith in order to reduce the amount of clean H_2 required for backflushing at high pressures and decrease the regeneration interval.

During this project, UNDEERC attempted to activate four different formulations of high-density carbon fiber/carbon matrix composites. Activation methods included heating to 450°C in static, high-pressure steam or oxygen and the use of chemical activation. However, only butane adsorptivities of 2 to 3 percent were able to be obtained for the activated carbon produced from the monolithic carbon fiber composite, whereas commercial granulated activated carbons have butane adsorptivities of up to 18 percent. In follow-on work, the focus was on pressing mixtures of granular and powdered activated carbon and binder. These results were successful in making conductive monoliths with twice the density of

technology maturity:

Laboratory-Scale

project focus:

High-Density Active Carbon

participant:

University of North Dakota Energy and Environmental Research Center (UNDEERC)

project number:

FC26-05NT42465-3.1

NETL project manager:

Edgar Klunder
edgar.klunder@netl.doe.gov

principal investigator:

John Hurley
University of North Dakota Energy & Environmental Research Center
jhurley@undeerc.org

partners:

SGL Carbon

performance period:

06/23/05 – 06/22/07

granular beds, or approximately 40 percent of the theoretical skeletal carbon density. In addition, a method of treatment of the activated carbon granules were developed to reduce the resistivity of the monoliths by a factor of 10 relative to those made from the commercially available granular activated carbon.

Figure 1 shows how well the monolith separates different components from a simulated reformer gas stream. The figure is a plot of gas breakthrough curves for a monolith tested at 200 pounds per square inch gauge (psig) with a simulated reformer gas stream. The horizontal dashed lines show the concentrations of the different gases in the incoming gas stream. The light blue curve on the lower left is oxygen coming out of the monolith that was originally saturated with air. The difference between the sums of the curves and 100 percent is due to nitrogen, which was not directly detected. The monoliths were tested at higher pressures in a follow-on U.S. Department of Defense (DoD) project and were tested for their ability to be regenerated by passing an electric current through the monolith, possibly to disrupt the Vander Waals forces holding the gas molecules to the activated carbon surface or to resistively heat the monolith in a thermal swing adsorption process.

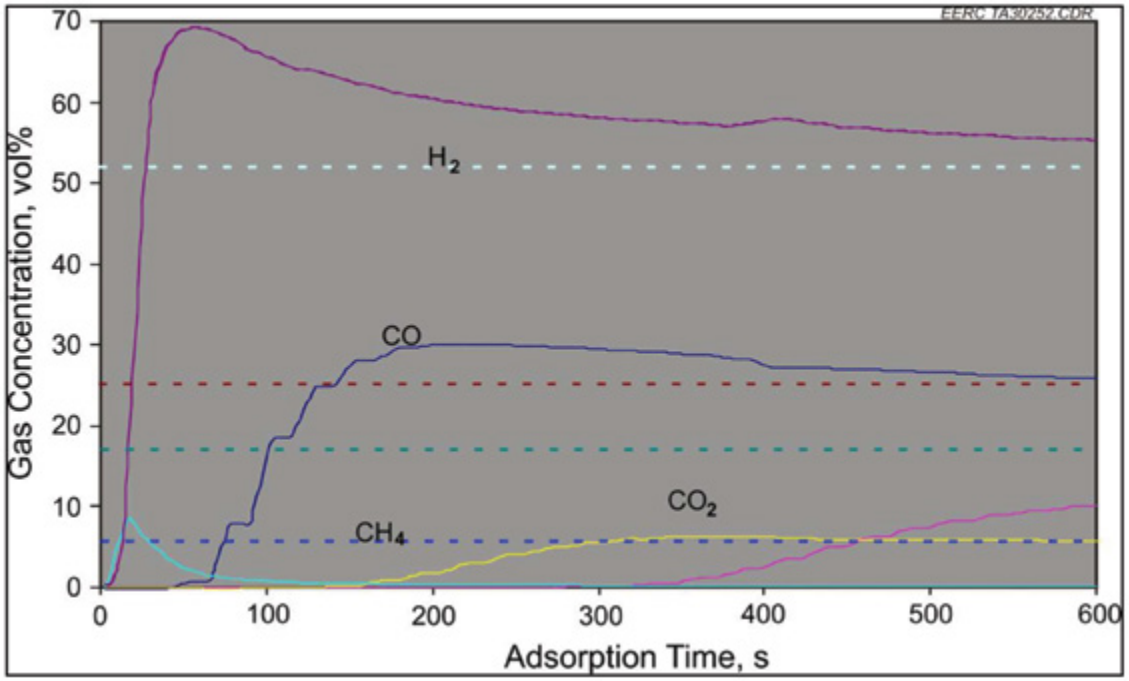

Figure 1: Gas Breakthrough Curves for a Monolith Tested at 200 psig

technology advantages

High-pressure H_2/CO_2 separation, coupled with isobaric sorbent regeneration using an electrical current, will increase plant efficiency by reducing the parasitic load associated with gas compression. Also, because of the high density of the monolith, the gas adsorption per unit volume is nearly doubled, and the amount of H_2 necessary to flush the intergranular spaces is cut by 25 percent.

R&D challenges

The project team discovered that the carbon sorbents require a long adsorption/desorption cycle time and no activation occurred during exposure to steam for 24 hours, while attempts to activate the material by reaction with an oxidizing gas showed limited results. Further, the introduction of reactive metals had a nominal effect on surface area creation.

results to date/accomplishments

- Prepared high-density, monolithic-activated carbons for high-pressure H_2/CO_2 separation.
- Measured the surface area, pressure drop, and electrical conductivity of the activated carbon sorbents.

next steps

This project ended on June 22, 2007.

available reports/technical papers/presentations

Hurley, J.P. High-Density Activated Carbon for High-Pressure Hydrogen Purification; Final Report; U.S. DOE, April 2008.

this page intentionally left blank

APPENDIX B: CARBON DIOXIDE CAPTURE TECHNOLOGY SHEETS

PRE-COMBUSTION MEMBRANES

ADVANCED HYDROGEN TRANSPORT MEMBRANES FOR COAL GASIFICATION

primary project goals

The objective of Phase II is to scale-up hydrogen transport membrane technology, resulting in the design, fabrication, and demonstration of a hydrogen separator capable of separating 50 to 100 lb/day of hydrogen from a coal gasification synthesis gas (syngas) stream.

technical goals

- Design and fabricate a multi-tube, pilot-scale separator to separate 50 to 100 lb/day of hydrogen from a coal gasification syngas stream.
- Fabricate and install hydrogen transport membranes in a pilot-scale separator connected to an operating coal gasifier.
- Test the membrane reactor for separating 50 to 100 lb/day of hydrogen from the coal-derived syngas.

technical content

Praxair previously developed a palladium (Pd)-alloy membrane capable of operating at lower temperatures to efficiently separate hydrogen (H_2) at low cost from various sources, including syngas, from coal gasification units. The removal of H_2 from syngas results in a stream of concentrated carbon dioxide (CO_2) ready for further purification and sequestration.

A porous ceramic substrate that has graded porosity was produced. This grading permits the coating of the microporous surface without significant defects, while the rest of the tube has open porosity that poses minimal resistance to flow.

The membranes must be incorporated into a membrane unit that separates hydrogen from syngas derived from gasification and produces a high-pressure, CO_2-rich retentate stream. The project will examine different membrane reactor designs, including use of catalysts and sweep streams, to select the optimum membrane reactor configuration. Reactor modeling will evaluate different configurations and estimate the impact of reactor design on performance. In Phase II, a pilot-scale reactor will be built and integrated with an operating gasifier to produce 50 to 100 lbs/day of hydrogen.

technology maturity:

Bench- to Pilot-Scale, Using Simulated and Actual Syngas

project focus:

Membrane for H_2 Separation

participant:

Praxair

project number:

FE0004908

NETL project manager:

Darryl Shockley
darryl.shockley@netl.doe.gov

principal investigator:

Joseph Schwartz
Praxair Inc.
joseph_schwartz@praxair.com

partners:

Colorado School of Mines
T3 Scientific LLC (Phase I)
UNDEERC

performance period:

9/29/10 – 9/31/15

TABLE 1: MEMBRANE PROCESS PARAMETERS

	Units	Current R&D Value	Target R&D Value
Materials Properties			
Materials of Fabrication for Selective Layer		Pd alloy	
Materials of Fabrication for Support Layer		Ceramic	
Nominal Thickness of Selective Layer	µm	5	5
Membrane Geometry		Shell & tube	Shell & tube
Maximum Trans-Membrane Pressure	bar	20	35
Hours Tested Without Significant Degradation		1,000	8,000
Manufacturing Cost for Membrane Material	$/m^2		
Membrane Performance			
Temperature	°C	300 – 400	300 – 400
H_2 Pressure Normalized Flux	GPU or equivalent		
H_2/H_2O Selectivity	-	>100	>100
H_2/CO_2 Selectivity	-	>100	>100
H_2/H_2S Selectivity	-	>100	>100
Sulfur Tolerance	ppm	10	10
Type of Measurement	-		
Proposed Module Design			
Flow Arrangement	-		
Packing Density	m^2/m^3	25	
Shell-Side Fluid	-	Syngas	
Syngas Gas Flowrate	kg/hr		
CO_2 Recovery, Purity, and Pressure	% / % / bar		
H_2 Recovery, Purity, and Pressure	% / % / bar		
Pressure Drops Shell/Tube Side	bar		
Estimated Module Cost of Manufacturing and Installation	$ / kg/hr	5,000	

Definitions:

Membrane Geometry – Flat discs or sheets, hollow fibers, tubes, etc.

Pressure Normalized Flux – For materials that display a linear dependence of flux on partial pressure differential, this is equivalent to the membrane's permeance.

GPU – Gas Permeation Unit, which is equivalent to 10^{-6} cm^3 (1 atm, 0°C)/cm^2/s/cm Hg. For non-linear materials, the dimensional units reported should be based on flux measured in cm^3 (1 atm, 0°C)/cm^2/s with pressures measured in cm Hg. Note: 1 GPU = 3.3464×10^{-6} kg mol/m^2-s-kPa [SI units].

Type of Measurement – Either mixed or pure gas measurements; projected permeance and selectivities should be for mixture of gases found in pre-conditioned syngas.

Flow Arrangement – Typical gas-separation module designs include spiral-wound sheets, hollow-fiber bundles, shell-and-tube, and plate-and-frame, which result in either co-current, counter-current, cross-flow arrangements, or some complex combination of these.

Packing Density – Ratio of the active surface area of the membrane to the volume of the module.

Shell-Side Fluid – Either the permeate (H_2-rich) or retentate (syngas) stream.

Estimated Cost – Basis is kg/hr of CO_2 in CO_2-rich product gas; assuming targets are met.

Other Parameter Descriptions:

Membrane Permeation Mechanism – Hydrogen molecules are dissociated on the Pd-alloy surface. Hydrogen atoms selectively diffuse through the dense metal layer, producing a high-purity hydrogen product on the permeate side of the membrane. Flux depends on the square roots of the hydrogen partial pressures.

Contaminant Resistance – Palladium is sensitive to even small amounts of sulfur. In Phase I, alloys of Pd that survived testing in coal-derived syngas that contained sulfur were demonstrated.

Syngas Pretreatment Requirements – High-temperature sulfur cleanup significantly improves membrane performance without the economic impact of providing additional energy required to heat the membrane feed after low-temperature cleanup.

Membrane Replacement Requirements – All membranes tested in Phase I in coal-derived syngas survived for the length of the test. Membranes have survived in simulated syngas for more than 1,000 hours.

Process Design Concept – Several different processes will be examined as part of Phase II. An example process is shown below (from U.S. Patent Application 2010/0077766). The membrane modules are highlighted.

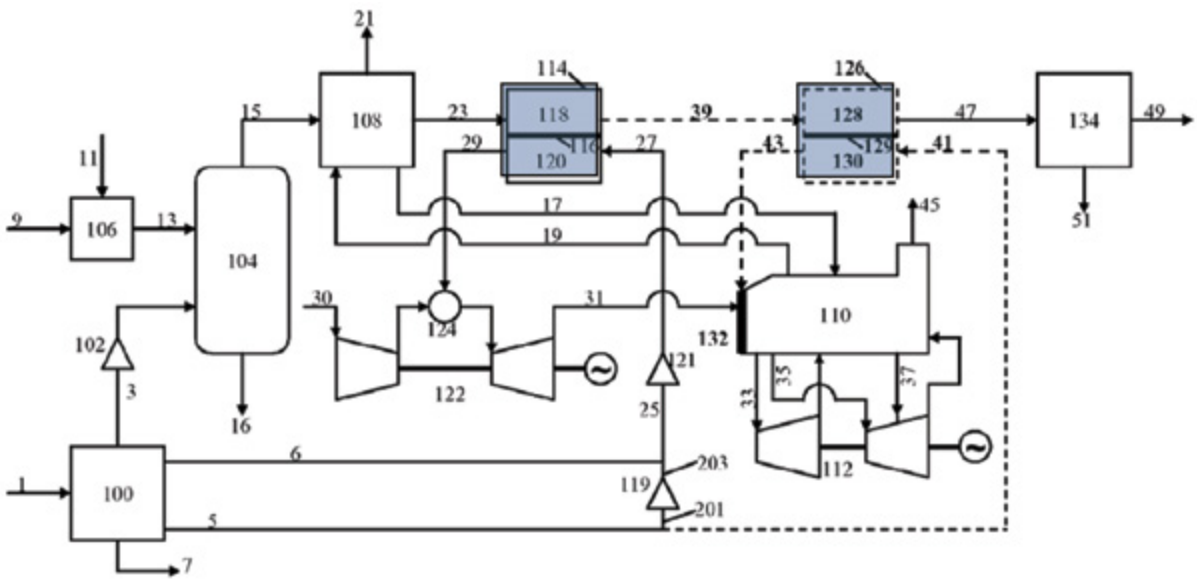

Figure 1: Proposed Module Design

Two hydrogen transport membranes (116 and 129) are used to recover hydrogen from syngas (23) produced by a gasifier (104). High-pressure nitrogen (27) is used to sweep the first membrane (116) and feed a gas turbine (122), while low-pressure nitrogen (41) is used to sweep the second membrane (129) to feed a heat recovery steam generator (110).

Proposed Module Design – The location of the module is shown in the diagram above.

The gas (23) entering the module has a pressure of 500 pounds per square inch absolute (psia), temperature of 750°F, and contains approximately 47.3% H_2, 29.9% CO_2, 20.2% H_2O, 1.3% carbon monoxide (CO), 1.0% nitrogen (N_2), and 0.3% other.

technology advantages

- Thin supported membrane has high flux at low precious metal cost.
- Alloys under development that have shown excellent performance in mixed gas streams, including sulfur.

R&D challenges

- Scale-up membrane size.
- Design multi-tube membrane separator to optimize performance.

results to date/accomplishments

- Demonstrated hydrogen transport membrane performance in three tests with operating gasifier.
- Completed 1,000-hour life test in simulated syngas.
- Reactor sizing and design has begun.
- From prior related project:
  - A Pd-ruthenium (Ru) membrane had a flux of 965 standard cubic feet per hour (scfh)/ft^2 at 200 psi and 400°C.
  - A method to produce substrate tubes by extrusion was developed. Extrusion allows for larger substrates, as well as larger quantities of substrates, to be produced.
  - A model was developed to determine alloy structures using cluster expansion and a model had been developed to calculate flux based on all steps of the overall process.

next steps

- Design hydrogen transport membrane module to separate at 50 to 100 lbs/day of hydrogen from operating gasifier.
- Build and demonstrate module performance when integrated with an operating gasifier.

available reports/technical papers/presentations

N/A

SCALE-UP OF HYDROGEN TRANSPORT MEMBRANES

primary project goals

Eltron Research & Development Inc. is demonstrating energy-efficient industrial carbon capture and storage (ICCS) using an advanced membrane system for hydrogen (H_2) and carbon dioxide (CO_2) capture.

technical goals

Develop an H_2/CO_2 separation system which:

- Delivers pure H_2 for use in fuel cells, gas turbines, or hydrocarbon processing.
- Retains CO_2 at coal gasifier pressures.
- Operates near water-gas shift (WGS) conditions.
- Tolerates coal-derived impurities (e.g., sulfur).

technical content

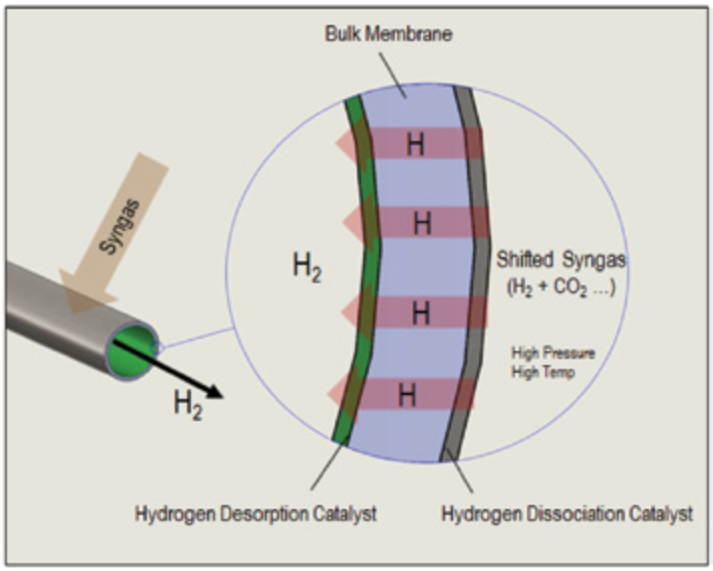

Figure 1: Eltron Hydrogen Transport Membrane

The hydrogen separation membranes under development are self-supporting dense metal alloy membranes. These membranes will be compatible with high-temperature WGS reactors employed in coal gasification-based H_2 production and combined-cycle power plants. The membranes will operate in the range of approximately 300 to 500°C. A typical feed gas composition is 40 mol% H_2, 37% steam (H_2O), 18% CO_2, 3% carbon monoxide (CO), and 2% other gas components, and will also contain residual impurities from coal gasification that have not been removed upstream of the WGS reactors. The membranes function at pressures set by coal gasifier operations of 30 atm (450 pounds per square inch [psi]) to 70 atm (1,000 psi).

technology maturity:

Pilot-Scale, 100 kg/day H_2 Production

project focus:

Hydrogen Transport Metal Alloy Membranes for IGCC-CCS

participant:

Eltron Research & Development

project number:

FC26-05NT42469

NETL project manager:

Vito Cedro
vito.cedro@netl.doe.gov

principal investigator:

Carl Evenson
Eltron Research & Development
cevenson@eltronresearch.com

partners:

URS

performance period:

8/16/05 – 9/30/15

Figure 1 illustrates Eltron's H_2 membrane. Shifted synthesis gas (syngas) is fed to the outside surface of the membrane. Hydrogen is separated by the multilayer dense membrane as described below, leaving a CO_2-rich stream at high pressure ready for geological storage. The membrane can be operated without a sweep gas for pure H_2 production, or with a nitrogen sweep gas for H_2 turbine power production.

TABLE 1: ELTRON MEMBRANE PARAMETERS

	Units	Current R&D Value	Target R&D Value
Materials Properties			
Materials of Fabrication for Selective Layer		Metal alloy	
Materials of Fabrication for Support Layer		N/A	
Nominal Thickness of Selective Layer	µm	500	400
Membrane Geometry		Self-Supporting Tube	
Maximum Trans-Membrane Pressure	bar	Up to 55 bar	Up to 55 bar
Hours Tested Without Significant Degradation		1000	3000
Manufacturing Cost for Membrane Material	$/m^2	6400	2800
Membrane Performance			
Temperature	°C	300 – 500	300 – 500
H_2 Pressure Normalized Flux	GPU or equivalent	4.0 x 10^{-4} mol/m^2/s/Pa$^{0.5}$	7.5 x 10^{-4} mol/m^2/s/Pa$^{0.5}$
H_2/H_2O Selectivity	-	100%	100%
H_2/CO_2 Selectivity	-	100%	100%
H_2/H_2S Selectivity	-	100%	100%
Sulfur Tolerance	ppm	20	20
Type of Measurement	-	Mixed	Mixed
Proposed Module Design			
Flow Arrangement	-	Shell – and – Tube	
Packing Density	m^2/m^3	36.4	
Shell-Side Fluid	-	Syngas	
Syngas Gas Flowrate	kg/hr	20,800	
CO_2 Recovery, Purity, and Pressure	% / % / bar	90%, Pipeline Spec, 55–70 ba	
H_2 Recovery, Purity, and Pressure	% / % / bar	95%, 100%, 14–31 bar	
Pressure Drops Shell/Tube Side	bar	0.14 / 0.06	
Estimated Module Cost of Manufacturing and Installation	$ / kg/hr	382 including membrane costs	

Definitions:

Membrane Geometry – Flat discs or sheets, hollow fibers, tubes, etc.

Pressure Normalized Flux – For materials that display a linear dependence of flux on partial pressure differential, this is equivalent to the membrane's permeance.

GPU – Gas Permeation Unit, which is equivalent to 10^{-6} cm^3 (1 atm, 0°C)/cm^2/s/cm Hg. For non-linear materials, the dimensional units reported should be based on flux measured in cm^3 (1 atm, 0°C)/cm^2/s with pressures measured in cm Hg. Note: 1 GPU = 3.3464×10^{-6} kg mol/m^2-s-kPa [SI units].

Type of Measurement – Either mixed or pure gas measurements; projected permeance and selectivities should be for mixture of gases found in pre-conditioned syngas.

Flow Arrangement – Typical gas-separation module designs include spiral-wound sheets, hollow-fiber bundles, shell-and-tube, and plate-and-frame, which result in either co-current, counter-current, cross-flow arrangements, or some complex combination of these.

Packing Density – Ratio of the active surface area of the membrane to the volume of the module.

Shell-Side Fluid – Either the permeate (H_2-rich) or retentate (syngas) stream.

Estimated Cost – Basis is kg/hr of CO_2 in CO_2-rich product gas; assuming targets are met.

Other Parameter Descriptions:

Membrane Permeation Mechanism – Eltron's hydrogen transport membrane is a dense, multilayer metal membrane that separates hydrogen according to Sieverts' Law:

$$J = \frac{P}{d}(P_f^{0.5} - P_s^{0.5})$$

where: J = hydrogen flux (mol/m^2/s)

d = membrane thickness (m)

P = permeability (mol/m/s/Pa$^{0.5}$)

Pf = hydrogen partial pressure on the feed side of the membrane (Pa)

Ps = hydrogen partial pressure on the sweep side of the membrane (Pa)

Sieverts' Law states that hydrogen flux through the membrane is directly related to the membrane permeability and inversely proportional to membrane thickness. In addition, hydrogen flux is directly proportional to the difference in the square roots of the hydrogen partial pressure across the membrane.

Contaminant Resistance – Eltron's membrane is tolerant to the levels of contaminants expected down-stream of the syngas pre-treatments steps described below.

Syngas Pretreatment Requirements – Syngas pretreatment steps include cold or warm gas cleaning of syngas to remove sulfur, one or more water-gas shift beds, and any appropriate guard beds.

Membrane Replacement Requirements – Membrane replacement will be determined by the trade-off of membrane cost and performance stability.

Waste Streams Generated – No additional waste streams are generated by Eltron's membrane system.

Process Design Concept:

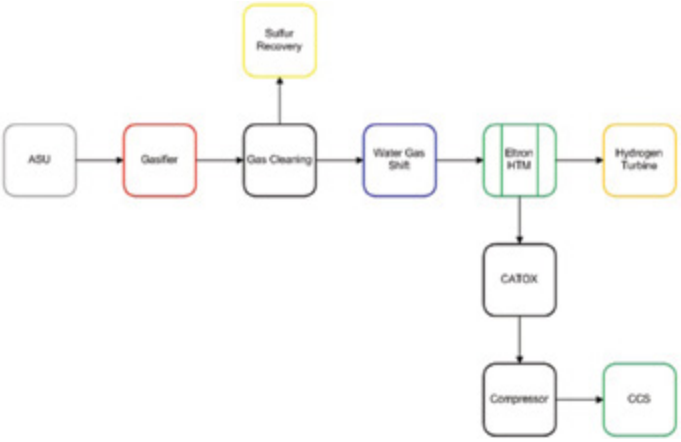

Figure 2: Block Flow Diagram for an IGCC-CCS Plant Utilizing Eltron's Membrane System for Hydrogen and Carbon Dioxide Separation

Proposed Module Design – Eltron's membrane module is tube-and-shell configuration. As shown in Figure 2, the membrane module is located downstream of gas cleaning and WGS processes. Gas cleaning may be a warm or cold gas cleaning process.

technology advantages

Dense metallic membranes have a high hydrogen flux and produce essentially pure H_2. They can be operated at the desired application pressures and temperatures, producing a residual CO_2 stream at higher pressures than competing technologies and minimizing CO_2 compression requirements for sequestration.

R&D challenges

Major challenges include lifetime performance under coal or petcoke-derived syngas and manufacturing scale-up.

results to date/accomplishments

- Completed field testing of membrane at Eastman Chemical, University of North Dakota – Environmental & Energy Research Center, and the National Carbon Capture Center.
- Improved composition and properties of the membrane, leading to better understanding of fabrication and improved separation performance.
- Tube manufacturing scaled-up to production of 10-foot long membrane tubes.
- Developed modeling tools to characterize and design membranes modules and systems.
- Improved membrane-based integrated gasification combined cycle (IGCC) flow sheets, achieving carbon capture greater than 95 percent, and the potential to achieve a 10 percent reduction in cost of electricity (COE) compared to baseline CO_2 capture technology.

next steps

- Conduct detailed process modeling and techno-economics analysis of an IGCC-CCS power plant to demonstrate a lower COE than conventional technology.
- Design, procure, and construct pilot.
- Operate pilot on coal or petcoke-derived syngas.

available reports/technical papers/presentations

Jack, D.; Evenson, C.; Faull, D.; et.al., "Scale-up of Hydrogen Transport Membranes for IGCC and FutureGen Plants," presented Gasification Technologies Conference, October 2011.

Evenson, C., "Scale-up of Hydrogen Transport Membranes for IGCC and FutureGen Plants," presented May 2011 at NETL.

Hydrogen Separation Using Dense Composite Membranes, In Inorganic Membranes for Energy and Fuel Applications; Arun Bose, Editor; Springer: New York, 2009; 125-172.

Jack, D., "CO_2 Capture and Hydrogen Production in IGCC Power Plants," presented at Gasification Technologies Conference, October 2008.

ENGINEERING DESIGN OF ADVANCED H_2 – CO_2 PD AND PD/ALLOY COMPOSITE MEMBRANE SEPARATIONS AND PROCESS INTENSIFICATION

primary project goals

Worcester Polytechnic Institute's (WPI) primary project goal is to enhance palladium (Pd) and Pd/alloy membrane permeance and stability in actual synthesis gas (syngas) from coal (or biomass) gasification. WPI will demonstrate membrane stability for 1,000 hours in actual coal-derived syngas, and implement MembraGuardTM (T3's technology) to inhibit surface poisoning by hydrogen sulfide (H_2S) and other contaminants.

technical goals

- Synthesize thin-layer (< 10 µm) Pd and Pd/gold (Au) (or other metals, such as platinum [Pt]) membranes with long-term stability of hydrogen (H_2) flux and selectivity. A permeance of 50 standard cubic feet per hour (scfh)/(m^2 $psi^{0.5}$) and an H_2 purity of at least 99.5 percent are targeted.
- Demonstrate and make use of MembraGuardTM coating to protect Pd/alloy surfaces from contaminants (H_2S and others).
- Fabricate and test at the National Carbon Capture Center (NCCC) a membrane module skid consisting of a permeation module capable of producing 2 to 25 pounds of H_2/day at the end of Phase II.
- Retrieve all engineering data in order to design a 4 ton/day of H_2 water-gas shift (WGS) membrane reactor.
- Use computational fluid dynamics (CFD) to model the H_2 permeation (mass transfer in gas phase, H_2 depletion along the membrane, H_2 transport through alloy membrane, and porous support) and compare with experimental results at NCCC.

technical content

WPI will be developing an integrated hydrogen and separation process using Pd and Pd/alloy membranes for an H_2 permeation module. Thin-layer Pd membranes, Pd/copper (Cu), and Pd/Au membranes with long-term thermal and chemical stability will be synthesized with a special emphasis on the long-term stability of H_2 flux and selectivity. Synthesized membranes will be characterized for their H_2 permeation through multiple thermal cycling. Membrane modules similar to shell-and-tube heat exchanger arrangement will be constructed for slipstream testing at NCCC in Wilsonville, Alabama. The membrane permeability and durability will be tested with a slipstream from an operating coal gasifier at NCCC.

technology maturity:

Pilot-Scale, Using Actual Syngas (20 scf H_2/day)

project focus:

Pd – Pd/Alloy Composite Membrane for H_2 Separation

participant:

Worcester Polytechnic Institute

project number:

FE0004895

NETL project manager:

Jason Hissam
jason.hissam@netl.doe.gov

principal investigator:

Yi Hua Ma
Worcester Polytechnic Institute
yhma@wpi.edu

partners:

Membrane Technology and Research Inc.
Johnsaon Matthey
T3 Scientific LLC

performance period:

9/20/10 – 9/30/15

TABLE 1: MEMBRANE PROCESS PARAMETERS

	Units	Current R&D Value	Target R&D Value
Materials Properties			
Materials of Fabrication for Selective Layer		Pd, Pd/Au, Pd/Cu	Pd, Pd/Au, Pd coated with S-resistant layer
Materials of Fabrication for Support Layer		PSS-316L	
Nominal Thickness of Selective Layer	µm	5 – 10	≈5
Membrane Geometry		Shell & tube	Shell & tube
Maximum Trans-Membrane Pressure	bar	12.6	40 – 50
Hours Tested Without Significant Degradation		3,550	1,000
Manufacturing Cost for Membrane Material	$/m^2	2,000 – 5,000	1,000
Membrane Performance			
Temperature	°C	300 – 450	450 – 500
H_2 Pressure Normalized Flux	scfh/m^2 psi 0.5	26	52
H_2 purity Produced at 450°C at 12.6 bar	%	99.95%	> 99%
Sulfur Tolerance	ppm	5	5 – 10
Type of Measurement	-	Mixture	Mixture
Proposed Module Design			
Flow Arrangement	-	Co-current/Tangential	
Packing Density	m^2/m^3	> 180	
Shell-Side Fluid	-	None	
Syngas Gas Flowrate	lb/hr	10 – 50	
CO_2 Recovery, Purity, and Pressure	% / % / bar	100, low, 12.6	100, >90, 12.6
H_2 Recovery, Purity, and Pressure	% / % / bar	16, 99.95, 1	>60, 99, 1
Pressure Drops Shell/Tube Side	bar	Negligible	
Estimated Module Cost of Manufacturing and Installation	$ / kg/hr		

Definitions:

Membrane Geometry – Flat discs or sheets, hollow fibers, tubes, etc.

Pressure Normalized Flux – For materials that display a linear dependence of flux on partial pressure differential, this is equivalent to the membrane's permeance.

GPU – Gas Permeation Unit, which is equivalent to 10^{-6} cm^3 (1 atm, 0°C)/cm^2/s/cm Hg. For non-linear materials, the dimensional units reported should be based on flux measured in cm^3 (1 atm, 0°C)/cm^2/s with pressures measured in cm Hg. Note: 1 GPU = 3.3464×10^{-6} kg mol/m^2-s-kPa [SI units].

Type of Measurement – Either mixed or pure gas measurements; projected permeance and selectivities should be for mixture of gases found in pre-conditioned syngas.

Flow Arrangement – Typical gas-separation module designs include spiral-wound sheets, hollow-fiber bundles, shell-and-tube, and plate-and-frame, which result in either co-current, counter-current, cross-flow arrangements, or some complex combination of these.

Packing Density – Ratio of the active surface area of the membrane to the volume of the module.

Shell-Side Fluid – Either the permeate (H_2-rich) or retentate (syngas) stream.

Estimated Cost – Basis is kg/hr of CO_2 in CO_2-rich product gas; assuming targets are met.

Other Parameter Descriptions:

Membrane Permeation Mechanism – The process of H_2 transport through Pd is commonly described by considering in sequence all relevant elementary processes and their respective kinetic expressions. The following steps describe the H_2 transport:

1. Dissociative adsorption of H_2 onto the metal surface.
2. Transition of atomic H from the surface into the bulk metal.
3. Atomic H diffusion through the bulk metal.
4. Transition from the bulk metal to the surface at the permeate side.
5. Recombinative desorption of H_2 from the metal surface.

However, in the common operating conditions (high temperatures), the steps involving the transition of atomic H from the metal surface to the bulk in the high-H_2 partial pressure side (retentate), 2nd step, and vice-versa from the bulk to the surface in the low-H_2 partial pressure side (permeate), 4th step, are usually fast so that they can be considered a processes at equilibrium. Also, at high temperatures, when the H_2 adsorption and desorption kinetics are fast enough, the dissociation and the recombinative desorption of H_2, 1st and 5th steps, can be considered at equilibrium so that the atomic H concentration in the lattice is expressed as a simple function of the square root of the H_2 partial pressure at the gas-metal surface interfaces: $pH_2 0.5 \propto \vartheta H 1 - \vartheta H \propto xs$. In such conditions, the diffusion of atomic H within the Pd bulk, 3rd step, becomes the rate-limiting step of the entire process and the so-called diffusion-limited regime holds. The system can then be reduced to a single equation in which the H_2 permeate flux, nH_2,per, can be expressed as in the following equation, the well-known Sieverts' law:

$$\dot{n}_{H_2,per} = Q_{H_2} \cdot \frac{p_{H_2,ret_{int}}^{0.5} - p_{H_2,per_{int}}^{0.5}}{\delta} \equiv Q_{0,H_2} \cdot \exp\left(-\frac{E_a}{RT}\right) \cdot \frac{p_{H_2,ret_{int}}^{0.5} - p_{H_2,per_{int}}^{0.5}}{\delta}$$

Contaminant Resistance – Pd/Au and Pd/Cu alloy membranes provide some resistance to H_2S and are regenerable in H_2 at temperatures higher than 450°C. Regeneration can also be performed in air at temperatures ranging from 300 to 350°C for four to five hours.

Syngas Pretreatment Requirements: At the Outlet of the Gasifier – The syngas is cooled down to 400°C and sent to the particulate control device (PCD), which consists of sintered metal tube filters, where the ash/carbon particles concentration is reduced from 10,000 to 0.1 parts per million by volume (ppmv). After particulate removal, a split fraction of the raw syngas is sent to the syngas conditioning unit (SCU), where the syngas can be subjected to desulfurization, mercury removal, ammonia (NH_3) cracking, and hydrocarbon reforming or WGS. For this project, desulfurization, WGS, and mercury (Hg) removal may be performed in the SCU. The actual syngas cleaning line is composed of a zinc oxide (ZnO) bed for sulfur removal, and a carbonyl sulfide (COS) hydrolyser for COS removal, both installed within the NCCC scope boundary lines network. The raw syngas H_2S concentration, averaging 300 ppmv, is reduced to less than 1 ppmv after the first ZnO bed. The syngas is then forced through the COS hydrolyser in order to convert any COS into H_2S and CO_2. A second ZnO bed is present in the WPI-MTR skid before entering the permeation module.

Membrane Replacement Requirements – Membrane replacement requirements depend on membrane stability, membrane permeance, and membrane selectivity degradation as a function of time, and selectivity and permeance targets required by a specific technology application. So far, this parameter has not been assessed. However, helium (He) permeance and selectivity stability of the tested WPI membranes were stable and required no replacement within the operating timeframe (up to 700 hours) of the NCCC gasifier.

Waste Streams Generated – Aqueous solutions with NH_3 and low-metal salt concentrations during membrane synthesis. All waste streams are considered to be recoverable due to the high price of Pd salts.

Process Design Concept – The flow sheet and operating conditions of the NCCC-WPI-MTR testing rig can be seen in the following figures.

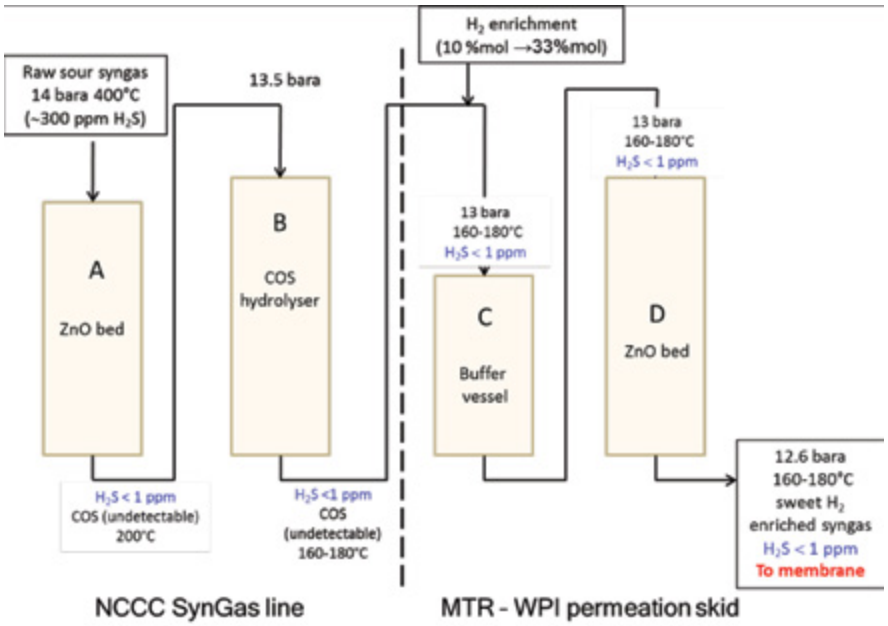

Figure 1: Syngas Cleaning Line

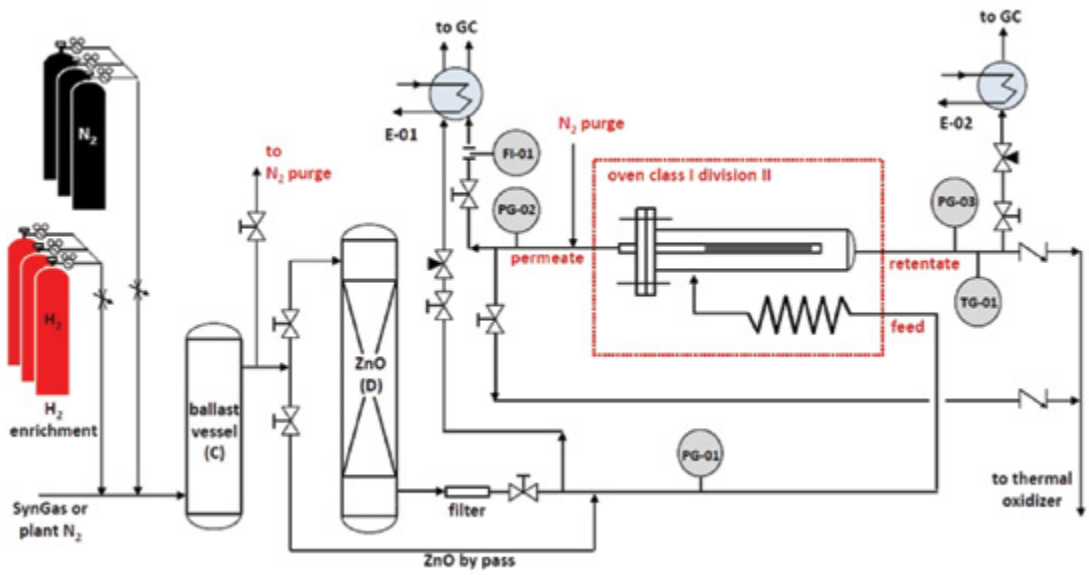

Figure 2: WPI-MTR Testing Skid

Proposed Module Design – JM and WPI jointly worked on a first permeation module based on a shell-and-tube design. The design of the module is based on a long tested and proven commercial design of JM. Mainly, the permeation module consists of a 4- to 8-inch OD cylinder housing 7-37 membranes in a hexagonal packing and flanged at the top with the gas collector. The 7-37 membranes are attached to the collector using Swagelok fittings allowing the removal/exchange of the membranes. The top flange also allows for an easy opening/sealing of the permeation module. The membrane assembly consists of a 15- to 24-inch long porous section. The total permeable surface area will be 0.1 to 1 m^2. The maximum H_2 production achieved by this module will be 2 to 30 lb/day. Feed flow rates will be set at 10 to 50 lb/hour. A heating coil will be added in order to heat the feed gas from 170 to 450°C.

TABLE 2: FEED GAS COMPOSITION

Syngas Components	Composition of Shifted Syngas (wet basis, mol %)
H_2	30 – 40
N_2	46
CO_2	7 – 12
CO	1 – 7
H_2O	5 – 10
CH_4	1
H_2S	<1 – 10
Impurities	Traces
Temperature (°C)	450
Pressure (barg)	11 – 12
Feed Flow (lb/h)]	10 – 50

technology advantages

- High-pressure CO_2 for carbon capture (low-compression costs).
- Low-steam requirements compared with traditional WGS reactor.
- High-purity H_2 at the permeate side for fuel cell applications or electricity generation (integration into an integrated gasification combined cycle [IGCC] cycle).
- Lower-cost operation by combining WGS reaction and separation in the same module.
- Higher energy efficiency.

R&D challenges

- Mitigate surface poisoning by known and unknown contaminants present in the syngas from coal.
- Mitigate defects at the welds of the porous/non-porous parts leading to inert leakages and a reduction in produced H_2 purity.
- The formulation of defect-free membranes material with resistant to sulfur and other contaminants present in actual coal-derived syngas.
- Long-term stability selectivity at 450°C for membranes of ≈ 5 microns.
- Development of a procedure with fewer steps for industrial production.
- Development of reliable, well reproducible, compatible with support materials, and environmentally friendly process to modify support surface in order to overcome support irregularities and surface characteristics inconsistencies.

results to date/accomplishments

- WPI was successful in manufacturing thin (<10 µm) alloy membranes with relatively high permeances 17-26 scfh/(m^2 $psi^{0.5}$) at 450°C on 0.2 and 0.5 µm grade PSS 316L supports.
- Stable H_2 fluxes were achieved in actual syngas atmospheres at 450°C for more than 470 hours.
- >99.9 percent H_2 purity was achieved for the entire duration of the second test, 470 hours (ΔP = 12 bar) with a Pd-Au membrane only 5-6 µm in thickness.
- Pure-Pd membranes with MembraGuardTM coating showed good stability in pure H_2 stream containing less than 200 ppmv of H_2S for more than 250 hours at 400°C.

- The preliminary design of a complete setup for a permeation system capable of producing 2-7 lb/day of hydrogen at temperature ranging between 350 and 450°C has already been completed (WPI-JM).
- Completed a new testing rig, fully automatic and remotely controllable, for the study and characterization of pilot-scale (1-inch OD) membrane under WGS reaction.
- 1.2 lb/day of H_2 was produced at gas-hourly space velocity (GHSV) of 5,600 h^{-1}.
- A purity as high as 99.97 percent was achieved under reaction up to 20 bar.
- Carbon monoxide (CO) conversion in excess of 98.1 percent and a H_2 recovery up to 81.5 percent were achieved.

next steps

- Prepare thin and stable composite Pd/alloy membranes on 0.5-inch OD PSS 316L.
- Continue equipment preparation for coating deposition on tubular membrane anticipated for next performing period at T3 facilities.
- Test at NCCC the permeation system designed by JM-WPI capable of producing 2-7 lb/day in 2013.
- Modify testing system at NCCC to accommodate H_2S addition to the syngas, hydrocarbon cracking or reforming, Hg bed absorbers.
- Pure nitrogen and pure hydrogen tests will be performed in the WGS reactor at WPI in order to reproduce the experimental data obtained with the same membranes in other devices already present in the WPI laboratories.
- Nitrogen-hydrogen mixture experiments at different operative conditions (i.e., different temperatures, hydrogen compositions, and feed flow rates) in the presence of the catalytic bed to perform fluid dynamic analysis and to esteem the mass transport coefficients and the relationship between the dimensionless numbers characteristic of the system. This analysis can be used in the future to model in a more-accurate way the behavior of the system in the presence of the WGS reaction
- Perform CFD calculations to better model mass transfer and H_2 depletion effects on H_2 permeation.

available reports/technical papers/presentations

JOURNAL ARTICLES:

Ma, Y.H.; Chen, C.H.; Catalano, J.; Guazzone, F.; and Payzant, E.A., "Synthesis, Annealing, and Performances of Pd–Au Asymmetric Composite Membranes for Hydrogen Purification," Ind Eng Chem Res (2013), Koc, R.; Kazantzis N.K.; Nuttall, W.J.; and Ma, Y.H., "An economic evaluation framework for membrane reactor modules in the presence of uncertainty: The case for process safety investment and risk reduction," J Loss Prev Process Ind . in correct proof available online.

Guazzone, F.; Catalano, J.; Mardilovich, I.P.; Kniep, J.; Pande, S.; Wu, T.; Lambrecht, R.C.; Datta, S.; Kazantzis, N.K.; and Ma, Y.H., "Enhancement of the Long Term Permeance, Selectivity Stability and Recoverability of Pd-Au Membranes in Coal Derived Syngas Atmospheres," Energy & Fuels (2013), Revision 1 submitted on the 2-28-13, to be accepted for publication.

Guazzone, F.; Catalano, J.; Mardilovich, I.P.; Kniep, J.; Pande, S.; Wu, T.; Lambrecht, R.C.; Datta, S.; Kazantzis, N.K.; and Ma, Y.H., "Gas permeation field tests of composite Pd and Pd-Au membranes in actual coal derived syngas atmosphere," Int. J. Hydrogen Energy (2012), 37, 14557-14568.

Koc, R.; Kazantzis, N.K.; Nuttall, W.J.; and Ma, Y.H., "Economic assessment of inherently safe membrane reactor technology options integrated into IGCC power plants," Process Safety and Environmental Protection (2012), 90, 436-450.

Augustine, A.S.; Mardilovich, I.P.; Kazantzis, N.K.; and Ma, Y.H., "Durability of PSS-supported Pd-membranes under mixed gas and water–gas shift conditions," J Membr Sci (2012), 415–416, 213-220.

Catalano, J.; Guazzone, F.; Mardilovich, I.P.; Kazantzis, N.K.; and Ma Y.H., "Hydrogen Production in a Large Scale Water–Gas Shift Pd-Based Catalytic Membrane Reactor," Ind Eng Chem Res (2011), DOI: 2025008.

Koc, R.; Kazantzis, N.K.; and Ma, Y.H., "A Process Dynamic Modeling and Control Framework for Performance Characterization and Enhancement of Pd-Based Membrane Reactors Used in Hydrogen Production," International J of Hydrogen Energy,

(2011), 36, 4934-4951.

Pomerantz, N., and Ma, Y.H., "Novel Method for Producing High H_2 Permeability Pd Membranes with a Thin Layer of the Sulfur Tolerant Pd/Cu fcc Phase," J Memb Sci. (2011), 370, 97-108.

Augustine, A.S.; Ma Y.H; and Kazantzis, N.K., "High pressure palladium membrane reactor for the high temperature water–gas shift reaction," Int J Hydrogen Energy (2011), 36, 5350-5360.

Pomerantz, N. and Ma, Y.H., "Isothermal Solid-State Transformation Kinetics Applied to Pd/Cu Alloy Membrane Fabrication," AIChE J (2010), 56, 3062-3073.

Chen, C.H., and Ma, Y.H., "The Effect of H_2S on the Performance of Pd and Pd/Au Composite Membrane," J Memb Sci. (2010), 362, 535-544.

Pomerantz, N., and Ma, Y.H. "Effect of H_2S on the Performance and Long-Term Stability of Pd/Cu Membranes." Ind Eng Chem Res (2009), 48, 4030-9.

Ayturk, M.E.; Kazantzis, N.K.; and Ma, Y. H., "Modeling and Performance Assessment of Pd- and Pd/Au-based Catalytic Membrane Reactors for Hydrogen Production," Energy and Environmental Science (2009), 2, 430-438.

PRESENTATIONS:

Mardilovich, I.; Guazzone, F.; Catalano J.; Kazantzis, N.K.; and Ma, Y.H., "Long Term H_2 Permeance and Selectivity Stability of Pd and Pd-Au Large Scale Membranes in Actual Syngas Atmospheres," presented at the 12th AIChE Annual Meeting, October 28-November 2, 2012, Pittsburgh, Pennsylvania, USA.

Ma, Y.H., and Koc, R., "An Economic Evaluation of Flexible Pd/Au-Based Membrane Reactor Design Options Integrated into IGCC Power Plants in the Presence of Uncertainty," presented at the 12th International Conference on Inorganic Membranes, July 9-13, 2012, University of Twente, Enschede, The Netherlands.

Ma, Y.H.; Mardilovich, I.P.; Guazzone, F.; Catalano, J.; and Kazantzis, N.K., "Long Term Stability of Thin Composite Pd and Pd-Au Membranes in Actual Coal Derived SynGas Stream – An Industrial Field Test," presented at the 12th International Conference on Inorganic Membranes, July 9-13, 2012, University of Twente, Enschede, The Netherlands.

Augustine, A.S.; Koc, R.; Kazantzis, N.K.; and Ma, Y.H., "Hydrogen Production From Syngas Containing H_2S with PSS Supported Pd-Membranes," presented at the North American Membrane Society Annual Meeting, June 9-13, 2012, New Orleans, Louisiana, USA

Ma, Y.H.; Mardilovich, I.; Guazzone, F.; Catalano, J.; and Kazantzis, N.K., "Performances and Stability of Pilot Scale Composite Pd and Pd-Au Membranes in Actual Coal Derived SynGas," presented at the AIChe Spring Meeting & 8th Global Congress on Process Safety, April 1-5, 2012, Houston, Texas, USA.

Catalano, J.; Guazzone, F.; Mardilovich, I.; Kazantzis, N.K.; and Ma, Y.H., "Hydrogen Production in a Large Scale Water Gas Shift Pd-Based Catalytic Membrane Reactor," presented at the AIChE Annual Meeting, October 16-21, 2011, Minneapolis, Minnesota, USA.

Ma, Y.H., Keynote lecture on "Inorganic Membranes for High Temperature Gas Separation and Reaction," presented at the International Congress on Membranes and Membrane Processes (ICOM 2011), July 23-29, 2011, Amsterdam, The Netherlands,

Guazzone, F.; Catalano, J.; Mardilovich, I.; Kazantzis, N.K.; Ma, Y.H., "Large scale hydrogen production in a water gas shift Pd based membrane reactor," presented at the North American Membrane Society Annual Meeting, June 4-8, 2011, Las Vegas, Nevada, USA.

Chen, C.H.; Ma Y.H.; Payzant A.E.; and Meyer, H., "The fabrication and characterization of the sulfur tolerant composite Pd/Au membranes for hydrogen separation," presented at the North American Membrane Society Annual Meeting, June 4-8, 2011, Las Vegas, Nevada, USA.

Koc, R.; Kazantzis, N.K.; and Ma, Y.H.., "Membrane Reactor Technology Integrated Into IGCC Power Plants: An Economic Evaluation in the Presence of Uncertainty," presented at the North American Membrane Society Annual Meeting, June 4-8, 2011,

Las Vegas, Nevada, USA.

Koc, R.; Kazantzis, N.K.; and Ma, Y.H., "A Process Dynamic Modeling and Control Framework for Performance Characterization and Enhancement of Pd-Based Membrane Reactors," presented at the 10th AIChE Annual Meeting, November 7-12, 2010, Salt Lake City, Utah, USA.

Koc, R.; Kazantzis, N.K.; and Ma, Y.H., "A Process Modeling Framework for Performance Assessment of Pd-Based Water-Gas Shift Membrane Reactors," presented at the 10th AIChE Annual Meeting, November 2010, Salt Lake City, Utah, USA.

Chen, C.H. and Ma, Y.H., "The Effect of Au Content in Composite Pd/Au Membranes Prepared by Galvanic Displacement On Hydrogen Permeance and H_2S Resistance," presented at the AIChE Annual Meeting, November 2010, Salt Lake City, Utah, USA.

Koc, R.; Kazantzis, N.K.; and Ma, Y.H., "Process Safety Aspects in Water-Gas-Shift (WGS) Catalytic Membrane Reactors Used for Pure Hydrogen Production," presented at the Mary Kay O'Connor Process Safety Center International Symposium, October 2010, College Station, Texas, USA.

Ma, Yi Hua, "Composite Pd and Pd Alloy Porous Stainless Steel Membranes for Hydrogen Production and Process Intensification," presented at the US DOE FY11 Advanced Fuels Peer Review, October 2010, Morgantown, West Virginia, USA.

Koc, R.; Kazantzis, N.K.; and Ma, Y.H., "Theoretical study for the integration of the Pd-based water gas shift membrane reactors into the IGCC plants." Poster presentation at the 240th ACS National Meeting, August 2010, Boston, Massachusetts, USA.

Koc, R.; Kazantzis, N.K.; and Ma, Y.H., "A Process Dynamic Modeling Framework for Performance Assessment of Pd-Based Membrane Reactors," presented at the North American Membrane Society Annual Meeting and 11th International Conference on Inorganic Membranes, July 2010, Washington, District of Columbia, USA.

Augustine, A.S.; Ayturk, M.E.; and Ma, Y.H., "Composite Palladium Membrane Reactor for Hydrogen Production with Syngas Feed," presented at the North American Membrane Society Annual Meeting and 11th International Conference on Inorganic Membranes, July 2010, Washington, District of Columbia, USA.

Ayturk, M.E. and Ma, Y.H. "Hydrogen Production via Composite Palladium Membranes with Long-Term Selectivity Stability," to be presented at the ACS Spring National Meeting and Exposition, March 2010, San Francisco, California, USA.

Chen, C.H. and Ma, Y.H., "Effect of H_2S concentration on hydrogen permeance of a composite Pd/Au hydrogen separation membrane prepared by galvanic displacement." presented at the ACS Spring National Meeting and Exposition, March 2010, San Francisco, California, USA.

Pomerantz, N. and Ma, Y.H., "Effect of mass transfer on Cu plating rate and deposition morphology for Pd/Cu alloy membranes for hydrogen separation," presented at the ACS 239th National Meeting and Exposition, March 2010, San Francisco, California, USA.

Ayturk, M.E. and Ma, Y.H., "Long-Term Selectivity Stability and High-Pressure Mixed Gas Hydrogen Permeation Testing of Composite Pd/Inconel Membranes," Presented at the AIChE Annual Meeting, November 2009, Nashville, Tennessee, USA.

Augustine, A.S.; Ayturk, M.E.; Kazantzis, N.K.; and Ma, Y.H., "Palladium Membrane Reactor for Water Gas Shift Reaction," Presented at the AIChE Annual Meeting, November 2009, Nashville, Tennessee, USA.

Pomerantz, N.; Payzant, E.A.; and Ma, Y.H. "Isothermal Solid-State Transformation Kinetics Applied to Pd/Cu Alloy Membrane Fabrication," Presented at the AIChE Annual Meeting, November 2009, Nashville, Tennessee, USA,.

Ma, Y.H.; Ayturk, M.E.; Augustine, A.S.; and Kazantzis, N.K., "Palladium Membrane Reactor for Water Gas Shift Reaction," Presented at the 9th International Conference on Catalysis in Membrane Reactors (ICCMR9), June 2009, Lyon, France.

Pomerantz, N.; Shaw, E.; and Ma, Y.H., "The effect of H_2S on the long-term stability of Pd/Cu membranes and the characteristics of H_2S poisoning of electroless deposited Pd," Presented at the AIChE Annual Meeting, November 2008, Philadelphia, Pennsylvania, USA.

Chen, C.H. and Ma, Y.H., "Characterization of sulfur resistance of Pd/Au hydrogen separation membranes," Presented at the AIChE Annual Meeting, November 2008, Philadelphia, Pennsylvania, USA.

Ayturk, M.E. and Ma, Y.H., "Defect-Free Composite Pd Membranes with High Temperature Long-Term Stability," Presented at the AIChE Annual Meeting, November 2008, Philadelphia, Pennsylvania, USA.

Ma, Y.H.; Kazantzis, N.K.; Ayturk, M.E.; Pomerantz, N.; and Chen, C.H., "Synthesis and Long-Term Characterization of Sulfur Tolerant Pd/Cu and Pd/Au Alloy Membranes for Hydrogen Production via Catalytic Membrane Reactor Applications," Presented at the 10th International Conference on Inorganic Membranes (ICIM10), August 2008, Tokyo, Japan.

Ayturk, M.E.: Kazantzis, N.K.; and Ma, Y.H., "Modeling and Performance Assessment of Pd- and Pd/Alloy-based Catalytic Membrane Reactors for Hydrogen Production," Presented at the International Congress on Membranes and Membrane Processes (ICOM), July 2008, Honolulu, Hawaii, USA.

Pomerantz, N.; Shaw, E.; and Ma, Y.H., "XPS studies of H_2S poisoned Pd deposits and the implications on Pd membrane performance." Presented at the International Congress on Membranes and Membrane Processes (ICOM), July 2008, Honolulu, Hawaii, USA.

Ma, Y.H.; Kazantzis, N.K.; Ayturk, M.E.: Pomerantz, N.; and Chen, C.H., "Composite Pd and Pd/alloy Porous Stainless Steel Membranes for Hydrogen Production, Process Intensification and CO_2 Sequestration," Presented at the NHA Annual Hydrogen Conference & Expo: "Ramping up Commercialization," March 2008, Sacramento, California, USA.

Chen, C.H. and Ma, Y.H., "Permeation of composite Pd/Au hydrogen separation membrane prepared by galvanic displacement," Presented at the ACS Annual Meeting, August 2007 Boston, Massachusetts, USA.

Pomerantz, N. and Ma, Y.H., "Effect of H_2S poisoning of Pd/Cu membranes on H_2 permeance and membrane morphology," Presented at the ACS 234th National Meeting and Exposition, August 2007, Boston, Massachusetts, USA.

Chen, C.H. and Ma, Y.H., "Preparation of Pd/Au hydrogen separation membrane by galvanic displacement," Presented at the North American Membrane Society Annual Meeting, May 2007, Orlando, Florida, USA.

DESIGNING AND VALIDATING TERNARY PD-ALLOYS FOR OPTIMUM SULFUR/ CARBON RESISTANCE

primary project goals

Pall Corporation is developing an economically viable hydrogen (H_2)/carbon dioxide (CO_2) separation membrane system that would allow efficient capture of CO_2 at high temperature and pressure from gasified coal in the presence of typical contaminants using a ternary palladium (Pd)-alloy. A membrane module prototype will be fabricated and will undergo long-term testing in actual coal gasification conditions. The final objective is a pilot-scale membrane system with a product plan for commercialization of the technology.

technical goals

- Create an advanced Pd-alloy for optimum H_2 separation performance using combinatorial material methods for high-throughput screening, testing, and characterization.
- Demonstrate durability under long-term testing of a pilot membrane module at a commercial coal gasification facility.
- Understand long-term effects of the coal gasifier environment on the metallurgy of the membrane components by comparing controlled diffusion studies with in-service membranes.

technical content

The project will develop an advanced Pd-alloy for optimum H_2 separation performance and to demonstrate long-term durability under coal synthesis gas (syngas) conditions. Ternary Pd-alloys with potential for favorable performance will be selected based on a literature search. This large set of ternary Pd-alloys will undergo combinatorial alloy spreads on thin film support disks. These disks will be tested in a syngas environment using in-situ Raman spectroscopy to measure H_2 separation factor and permeability, as well as characterize sulfur and carbon resistance of best candidate alloys. These alloys will be compared to baseline tests of traditional Pd-gold (Au) alloy membranes.

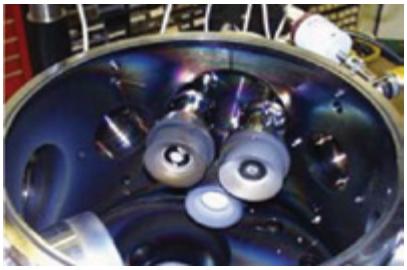

Figure 1: A Co-Sputtering Chamber

The best alloys will be fabricated into 15-cm^2 tubular membranes and tested. As with the combinatorial disks, the 15-cm^2 active area tubes will be exposed to conditions representative of a coal gasifier environment: high temperature and high pressure in the presence of contaminating species. Emphasis will be placed on identification and characterization of membrane defects, surface analysis of the regions affected by the contaminants, and assessment of the surface quality of the ceramic substrate.

technology maturity:

Pilot-Scale Using Actual Syngas

project focus:

Pd-Alloys for Optimum Sulfur/ Carbon Resistance

participant:

Pall Corporation

project number:

FE0001181

NETL project manager:

Patricia Rawls
patricia.rawls@netl.doe.gov

principal investigator:

Scott Hopkins
Pall Corporation
scott_d._hopkinsl@pall.com

partners:

Cornell University
Georgia Institute of Technology
Colorado School of Mines
Southern Company

performance period:

10/1/09 – 7/31/14

Using the best candidate alloys, the 15-cm² membranes will be scaled-up by a factor of five to 75-cm². After a series of performance tests and membrane characterization, a module of 75-cm² tubes, made with the best performing alloy, will be assembled. The module will be subjected to a 500-hour service test at a commercial coal gasification facility.

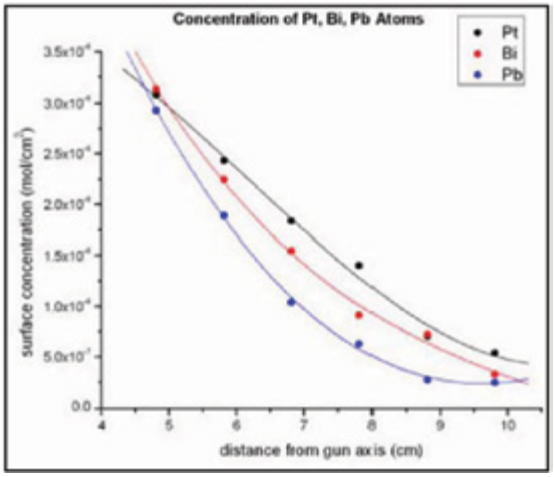

Figure 2: Graph of Atom Concentration as a Function of Distance from the Gun Axis for Pt, Bi, and Pb Targets

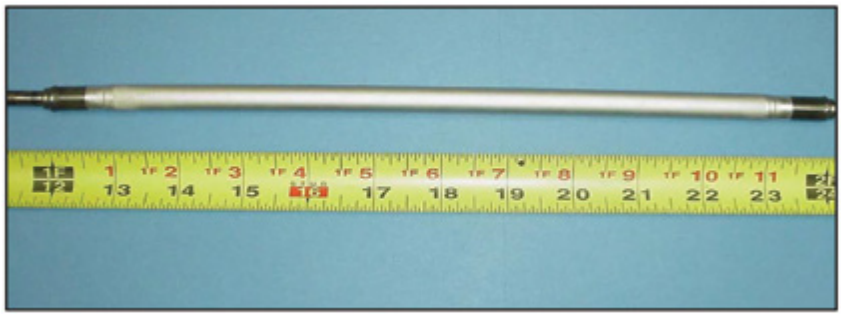

Figure 3: A 75-cm² Membrane

Technical Targets

- Membrane would be tolerant of up to 20 parts per million (ppm) hydrogen sulfide (H_2S).
- Hydrogen flux of 200 ft³/hr/ft² at 400°C and 20 pounds per square inch (psi) H_2 partial pressure differential.
- Total pressure differential operating capability 400 psi.
- The membrane cost must be in the range of $500/ft².
- Permeate H_2 purity should be at a level of 99.5 percent.
- The membrane must be resistant to coking with relatively low steam-to-carbon ratio.
- The system should be stable for a minimum of three years in service.

TABLE 1: MEMBRANE-BASED CO_2 SEPARATIONS

	Units	Current R&D Value	Target R&D Value
Materials Properties			
Materials of Fabrication for Selective Layer		Palladium-gold alloys	Palladium alloys
Materials of Fabrication for Support Layer		Zirconia coated porous stainless steel tubes	Zirconia coated porous stainless steel tubes
Nominal Thickness of Selective Layer	µm	3 – 5 um	3 – 7 um
Membrane Geometry		Shell and tube	Shell and tube
Maximum Trans-Membrane Pressure	bar	400psi @ 400°C	400psi@400°C
Hours Tested Without Significant Degradation		1,000	5,000
Manufacturing Cost for Membrane Material	$/m²	1,000	500
Membrane Performance			
Temperature	°C	400	450
H_2 Pressure Normalized Flux	GPU or equivalent	170	200
H_2/H_2O Selectivity	-		
H_2/CO_2 Selectivity	-		
H_2/H_2S Selectivity	-		
Sulfur Tolerance	ppm		
Type of Measurement	-		

TABLE 1: MEMBRANE-BASED CO_2 SEPARATIONS

	Units	Current R&D Value	Target R&D Value
Proposed Module Design			
Flow Arrangement	-	Outside – In	Outside – In
Packing Density	m^2/m^3		
Shell-Side Fluid	-		
Syngas Gas Flowrate	kg/hr		
CO_2 Recovery, Purity, and Pressure	% / % / bar		
H_2 Recovery, Purity, and Pressure	% / % / bar		
Pressure Drops Shell/Tube Side	bar		
Estimated Module Cost of Manufacturing and Installation	$\frac{\$}{kg/hr}$		

Definitions:

Membrane Geometry – Flat discs or sheets, hollow fibers, tubes, etc.

Pressure Normalized Flux – For materials that display a linear dependence of flux on partial pressure differential, this is equivalent to the membrane's permeance.

GPU – Gas Permeation Unit, which is equivalent to 10^{-6} cm^3 (1 atm, 0°C)/cm^2/s/cm Hg. For non-linear materials, the dimensional units reported should be based on flux measured in cm^3 (1 atm, 0°C)/cm^2/s with pressures measured in cm Hg. Note: 1 GPU = 3.3464×10^{-6} kg mol/m^2-s-kPa [SI units].

Type of Measurement – Either mixed or pure gas measurements; projected permeance and selectivities should be for mixture of gases found in pre-conditioned syngas.

Flow Arrangement – Typical gas-separation module designs include spiral-wound sheets, hollow-fiber bundles, shell-and-tube, and plate-and-frame, which result in either co-current, counter-current, cross-flow arrangements, or some complex combination of these.

Packing Density – Ratio of the active surface area of the membrane to the volume of the module.

Shell-Side Fluid – Either the permeate (H_2-rich) or retentate (syngas) stream.

Estimated Cost – Basis is kg/hr of CO_2 in CO_2-rich product gas; assuming targets are met.

Other Parameter Descriptions:

Contaminant Resistance – Palladium-based alloy membranes should tolerate moderate levels of coal gas contaminants after advanced hot syngas cleanup. Primary contaminants include H_2S and carbon monoxide (CO). A typical hot gas cleanup process can bring residual level of sulfur into the range of 0.5 to 20 parts per million volume (ppmv). After a single-stage water-gas shift (WGS) reactor, CO can be as low as a few percent.

Waste Streams Generated – No waste streams are generated since H_2 is extracted by a Pd-alloy membrane system with primarily CO_2 and water (H_2O) left at high pressure. After steam is condensed, CO_2 is sent for sequestration.

technology advantages

- Researchers will use a proprietary process to create ultrathin, economical, Pd-alloy membranes in virtually any alloy system.
- The project will apply combinatorial methods to continuous ternary alloy spreads and use a novel characterization method to rapidly scan the alloys after syngas exposure to identify the most resistant compositions.
- A customized composite substrate from Pall will be used to deposit ultrathin Pd-alloy membranes. The substrate is porous stainless steel tubes with ceramic coating on the outside surface as a diffusion barrier; thus, membrane elements can be assembled into the module by a conventional welding technique.

R&D challenges

- Hydrogen separation performance may not achieve target performance by membrane design alone. Supplements such as additional gas reforming capabilities may be required either upstream or downstream of the membrane module.
- Scale-up of the Pd-alloy surface area from 15 to 75 cm^2; although the membrane fabrication process has been designed for 75 cm^2 on tubular substrates, the actual scale-up has not been attempted.
- Membrane durability during thermal cycling and its effect on stability; the stability of the ceramic coated support has been demonstrated, but not the long-term stability with a Pd-alloy membrane in place.

results to date/accomplishments

- Identified six candidate ternary alloys that had little adsorption of sulfur and carbon after exposure.
- Added Colorado School of Mines as a subcontractor to create six ternary alloys for hydrogen permeance testing and sulfur/carbon exposure testing.

next steps

- Making 15 cm^2 samples for exposure testing.
- Select best alloys and directly make full-scale (active surface area 75 cm^2) membrane element of novel Pd-alloy prototypes.
- Conduct 100- to 500-hour tests on 75-cm^2 samples in simulated coal gas with trace amounts of impurities, including sulfur.

available reports/technical papers/presentations

Hopkins, S.; and H. Zhao. "High Throughput Design of Ternary Pd Alloys for Optimum Sulfur/Carbon Resistance in Hydrogen Separation & Carbon Capture Membrane Systems," presented at 2012 NETL CO_2 Capture Technology Meeting in Pittsburgh, PA, July 2012. *http://www.netl.doe.gov/File%20Library/Events/2012/CO2%20Capture%20Meeting/H-Zhao-Pall-Corp-High-Throughput-Matls.pdf*

Hopkins, S. "Designing and Validating Ternary Pd Alloys for Optimum Sulfur/Carbon Resistance," presented at 2011 NETL CO_2 Capture Technology Meeting in Pittsburgh, PA, August 2011.

Henkel, D., "Combinatorial Design of Pd Ternary Alloys for Sulfur/Carbon Tolerant Hydrogen Separation," presented at 2010 NETL CO_2 Capture Technology Meeting in Pittsburgh, PA, September 2010.

POLYMER-BASED CARBON DIOXIDE CAPTURE MEMBRANE SYSTEMS

primary project goals

Los Alamos National Laboratory (LANL) set out to develop and demonstrate polymer-based membrane structures, deployment platforms, and sealing technologies that achieve the critical combination of high selectivity, high permeability, chemical stability, and mechanical stability at elevated temperatures (>150°C) and packaged in a scalable, economically viable, high area density system amenable to incorporation into an integrated gasification combined cycle (IGCC) plant for pre-combustion carbon dioxide (CO_2) capture.

technical goals

- Continue to develop and demonstrate high-temperature, polybenzimidazole (PBI)-based membrane chemistries and morphologies for carbon capture and hydrogen purification from coal-derived shifted synthesis gas (syngas).
  - Operation under industrially relevant process conditions.
  - Stability in the presence of anticipated concentrations of primary syngas components and impurities.
- Develop the fabrication materials and methods required to realize those materials and morphologies as defect-free, high-area density hollow fiber membranes (HFMs) and modules.
- Demonstrate the technology potential via materials and membrane performance evaluation under industrially relevant process conditions.
  - Conduct permselectivity and materials stability evaluations under realistic syngas conditions.
  - Reduce perceived technical risks of utilizing a polymeric membrane-based technology in a challenging (thermal, chemical, mechanical) syngas environment.

technical content

LANL work-to-date has demonstrated that PBI and other benzimidazole-based materials show promise as membranes for pre-combustion-based capture of CO_2. The primary goals of this project are to: continue to develop and demonstrate PBI-based materials and morphologies as a separation media for hydrogen purification and carbon capture; demonstrate the performance of those materials in industrially relevant process streams; and further develop fabrication methodologies and separation schemes to support the technically and economically viable integration of a pre-combustion CO_2 capture system based on these materials into an advanced IGCC plant. The ultimate achievement in the area of CO_2 capture is the production of a CO_2-rich stream at pressure using methods compatible with the overall U.S. Department of Energy/National Energy Technology Laboratory (DOE/NETL) Carbon Capture Program research goals. The work that this project team is pursuing is aligned directly with these capture goals and utilizes a pre-combustion capture approach focused on the continued development of high-temperature, polymer-based membranes that will ultimately be integrated into an advanced IGCC process.

A PBI-based membrane selective layer chemistry is being utilized by the LANL project team. PBI is a unique polymer family that is stable to temperatures approaching 500°C. PBI possesses excellent chemical resistance, a high glass transition temperature (≈460 to

technology maturity:

Bench-Scale Using Simulated Syngas

project focus:

High-Temperature, Polymer-Based Membrane

participant:

Los Alamos National Laboratory

project number:

FE-308-13

NETL project manager:

Elaine Everitt
elaine.everitt@netl.doe.gov

principal investigator:

Kathryn A. Berchtold
LANL
berchtold@lanl.gov

partners:

PBI Performance Products

performance period:

03/01/13 – 02/28/14
(10/1/09 – 9/30/12 for FE-10-002)

500°C), good mechanical properties, and an appropriate level of processability. The PBI-based membranes developed by this project team have demonstrated operating temperatures significantly higher than 150°C (up to 400 to 450°C) with excellent chemical, mechanical, and hydrothermal stability. The materials and membranes that have been developed and continue to be optimized as part of this project outperform any polymer-based membrane available commercially or reported in the literature for separations involving hydrogen. This achievement is validated via membrane productivity (separation factor and flux) comparisons (Figure 1). The improved performance of this technology in an application such as IGCC-integrated capture is further substantiated by the accessible operating temperature range (up to 400°C), long-term hydrothermal stability, sulfur tolerance, and overall durability of the proposed membrane materials in these challenging pre-combustion environments. These characteristics have been validated via extensive evaluations of LANL's polymer-based membrane in simulated syngas environments containing hydrogen (H_2), CO_2, methane (CH_4), nitrogen (N_2), carbon monoxide (CO), H_2O, and hydrogen sulfide (H_2S), from 25 to 400°C, and demonstration of the membrane's thermal stability via 300-plus days in operation at 250°C. To date, these achievements and material/membrane property validations have been largely conducted on flat sheet and tubular platform membranes.

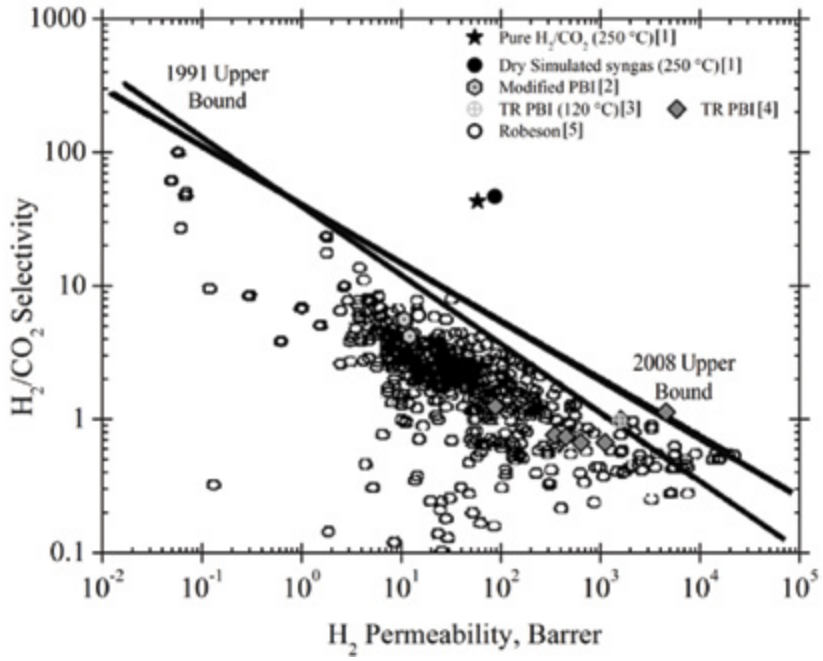

Figure 1: Robeson Plot Comparing PBI Composite Membrane [1] with Other Polymeric Membranes Tested for H_2/CO_2 Separation

The lines represent the 1991 and 2008 upper bound from Robeson [5], the black circles ( ) are the corresponding experimental data from Robeson [5]. The hexagons ( ) represent modified PBI membranes [2], and the diamonds ( ) and cross ( ) represent the thermally rearranged (TR) PBI-based polymer membranes [3, 4]. (Data from: [1] Berchtold and Singh et.al. JMS, 415 [2012]; [2] Kumbharkar et.al., 286 [2006]; [3] Park et.al., 259 [2010]; [4] Han et.al., 357 [2010]; and [5] Robeson, 320 [2008]).

A previous programmatic effort was focused on the utilization of the PBI formulations as a selective layer deposited on and supported by a unique porous metal substrate (fabricated by Pall Corporation). Systems, economic, and commercialization analyses conducted by NETL, LANL, and others, combined with in- and out-of-laboratory testing, established the technical viability of the technology and indicated the strong potential for the membrane-based capture technology to meet and exceed the DOE Carbon Capture Program goals. However, these analyses also made clear the need to cut the costs of the support material and increase the area density realized by the ultimate module design in order to realize the desired step-change in both performance and cost of CO_2 capture associated with the use of this membrane-based capture technology. One promising option for achieving a substantial increase in active membrane area density and mitigating the cost of a metal or inorganic material-based support is the use of an HFM platform. An HFM is the membrane configuration with the highest achievable packing density (i.e., the highest membrane selective area density). HFM modules have been fabricated to obtain selective area densities as high as 30,000 m^2/m^3. This affords the opportunity to achieve several orders of magnitude improvement over the density achievable with the previous polymeric-metallic membrane platform (ca. 250 m^2/m^3). Realization of such an increase in area density with the materials previously developed by this team would lead to substantial economic and technical benefits.

The work being conducted as part of this continuing development and demonstration effort includes the advancement of these materials in a commercially viable, all polymeric, HFM platform (Figure 2). HFMs provide numerous opportunities for realization of the desired performance and economic enhancements associated with the use of this membrane-based capture technology for

pre-combustion capture. Hollow fibers represent a high area density membrane platform, which will reduce the size requirement of the costly, high-temperature-tolerant membrane module housings, will minimize membrane support costs through their all-polymeric design, and will facilitate membrane flux maximization through processing facilitated selective layer thickness minimization. LANL will explore the synergies that derive from combining these advantageous hollow fiber characteristics to produce a high-flux, high area density membrane platform that meets or exceeds DOE system performance and economic goals.

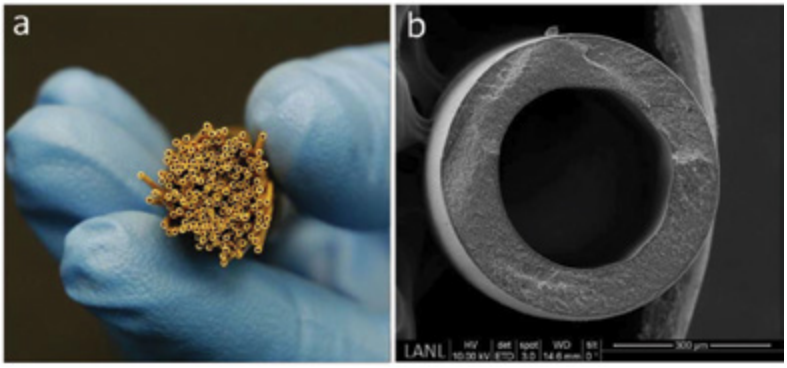

Figure 2: (a) On-End Image of Small PBI Hollow Fiber Bundle Prepared at LANL; (b) SEM Micrograph of PBI Hollow Fiber Showing Representative HFM Prepared by LANL

Current and future work is aimed at translation of the previously developed membrane materials chemistries into a high area density HFM platform via commercially viable HFM manufacturing methods, developing and deploying defect-mitigation strategies for optimizing membrane performance and durability, and demonstrating the produced membranes in simulated and ultimately real process environments with the overarching goal of technology progression towards commercialization.

TABLE 1: MEMBRANE PROCESS PARAMETERS

	Units	Current R&D Value		Target R&D Value
Materials Properties				
Materials of Fabrication for Selective Layer		high T_g polymer		
Materials of Fabrication for Support Layer		metallic composite	high T_g polymer	high T_g polymer
Nominal Thickness of Selective Layer	µm	0.6	1.3	0.1
Membrane Geometry		tubular	hollow fiber	hollow fiber
Maximum Trans-Membrane Pressure	bar	30[1]	4.5[1]	35
Hours Tested Without Significant Degradation		8,400(@ 250°C)[2]	288[2]	500
Manufacturing Cost for Membrane Material	$/m^2	>100		15
Membrane Performance				
Temperature	°C	250	150-350	150-350
H_2 Pressure Normalized Flux	GPU or equivalent	170	40-75	250
H_2/H_2O Selectivity	-	≈1		
H_2/CO_2 Selectivity	-	42	35-20	90-40
H_2/H_2S Selectivity	-	>1,800		>1,800
Sulfur Tolerance	ppm	10,000		10,000
Type of Measurement	-	mixed & pure	pure	mixed
Proposed Module Design				
Flow Arrangement	-	Counter	Complex	
Packing Density	m^2/m^3	250		2,000-15,000
Shell-Side Fluid	-	retentate		
Syngas Gas Flowrate	kg/hr	210-240		

TABLE 1: MEMBRANE PROCESS PARAMETERS

	Units	Current R&D Value	Target R&D Value
CO_2 Recovery, Purity, and Pressure	% / % / bar	90%, [3], 50 bar [3]	
H_2 Recovery, Purity, and Pressure	% / % / bar	> 98%,[4] , 20 bar[4]	
Pressure Drops Shell/Tube Side	bar	Not yet defined[5]	
Estimated Module Cost of Manufacturing and Installation	$ / kg/hr	Not yet defined[5]	

1. Max TMP tested, not max achievable TMP.
2. Time to test conclusion, no degradation observed.
3. Gasifier, coal feedstock, and upstream unit operation (e.g., water-gas shift [WGS]) specifications dependent.
4. Tailored to match the turbine inlet specifications (e.g., 125 LHV Btu/ft^3 and 20 bar permeate).
5. Optimized HFM geometry, module geometry, and all module design components are not fully defined.

Definitions:

Membrane Geometry – Flat discs or sheets, hollow fibers, tubes, etc.

Pressure Normalized Flux – For materials that display a linear dependence of flux on partial pressure differential, this is equivalent to the membrane's permeance.

GPU – Gas Permeation Unit, which is equivalent to 10^{-6} cm^3 (1 atm, 0°C)/cm^2/s/cm Hg. For non-linear materials, the dimensional units reported should be based on flux measured in cm^3 (1 atm, 0°C)/cm^2/s with pressures measured in cm Hg. Note: 1 GPU = 3.3464×10^{-6} kg mol/m^2-s-kPa [SI units].

Type of Measurement – Either mixed or pure gas measurements; projected permeance and selectivities should be for mixture of gases found in pre-conditioned syngas.

Flow Arrangement – Typical gas-separation module designs include spiral-wound sheets, hollow-fiber bundles, shell-and-tube, and plate-and-frame, which result in either co-current, counter-current, cross-flow arrangements, or some complex combination of these.

Packing Density – Ratio of the active surface area of the membrane to the volume of the module.

Shell-Side Fluid – Either the permeate (H_2-rich) or retentate (syngas) stream.

Estimated Cost – Basis is kg/hr of CO_2 in CO_2-rich product gas; assuming targets are met.

Other Parameter Descriptions:

Membrane Permeation Mechanism – Solution diffusion where at the proposed elevated separation temperatures, permeability is dominated by gas diffusivity in the selective layer.

Contaminant Resistance – Excellent resistance to syngas contaminants.

Syngas Pretreatment Requirements – Particulate removal.

Process Design Concept – Multiple location possibilities largely influenced by gasifier type (syngas pressure and quality), the employed WGS technology, and the presence or lack thereof of a warm temperature gas cleanup for sulfur removal prior to the capture step. For performance benchmark purposes, the membrane separation is conducted post-low temperature (250°C) WGS. Nitrogen from the air separation unit (ASU) is used as a membrane sweep gas, with the sweep flows specified based on the turbine inlet heating value specification. Initial evaluations have utilized GE F-class turbine specifications and GE (Texaco) gasifier-radiant operation.

Proposed Module Design – Hollow fiber module design comprised of high-pressure, high-temperature housings and components. The syngas will be processed at process T&P. The conditions of the primary separation position will be matched to those at the exit of the low-temperature WGS reactor. The pressure drop utilized will be tailored based on the turbine inlet pressure. This pro-

cess favors conditions created by gasifiers that operate at higher pressure.

technology advantages

- Broad accessible membrane operating temperature range (150 to 300+ °C) facilitating increased opportunity for process integration/optimization.
- Demonstrated long-term hydrothermal stability, sulfur tolerance, and overall durability of selective layer materials.
- Membrane-based technology competitive advantages: modularity, low-maintenance operations, small footprint, low/nO-waste process, and flexible design opportunities.

R&D challenges

- Design, control, prediction, and synthesis of tailored material morphologies in hollow fiber format.
- Realizing high-permeance, defect-free gas separation viable hollow fibers.
- Realizing sealing materials and methods compatible with the target material and process thermal, chemical, and mechanical characteristics/environments.

results to date/accomplishments

- Translation to robust, high-permeance, hollow fiber-based module platform underway.
  - Fundamental understanding of multi-component phase inversion system developed.
  - Translation of those learnings into fiber fabrication protocols established.
  - Control of selective layer thickness demonstrated using processing and phase inversion manipulations.
- Successful demonstration of HFMs with permselectivity characteristics matching that of the shell-and-tube composite membranes.
- Module fabrication materials and methods developed, enabling HFM evaluation to 350°C.
  - Fiber and module integrity and performance to 350°C demonstrated.
- Demonstrated success in developing methods for defect healing and sealing.
  - Performance of membrane prototypes incorporating healing and sealing approaches indicates exceptional opportunities for defect mitigation with minimal transport resistance using developed methods.

next steps

Continued development and demonstration of HFM fabrication methodologies to achieve high-permeance membranes in defect-minimized platforms.

- Further minimization of selective layer thickness – permselectivity optimization.
- Optimization of HFM geometry.
- Further development, demonstration, and implementation of fiber healing and sealing materials and methods.
- Module demonstration in “real” coal-derived IGCC syngas at the National Carbon Capture Center (NCCC), Power Systems Development Facility (PSDF).

available reports/technical papers/presentations

Berchtold, K.A.; Singh, R.P.; Young, J.S.; and Dudeck, K.W., "Polybenzimidazole composite membranes for high temperature synthesis gas separations," J. of Membrane Science 415-416 (2012) 265.

Berchtold, K.A., "High-Temperature polymer-based membrane systems for pre-combustion CO_2 capture," presented at 2012 NETL CO_2 Capture Technology Meeting, Pittsburgh, Pennsylvania, July 2012 *http://www.netl.doe.gov/publications/proceedings/12/co2capture/presentations/4-Thursday/K Berchtold-LANL-Polymer-based Membrane.pdf*.

Han, S.H., and Kwon, H.J., et al, "Tuning microcavities in thermally rearranged polymer membranes for CO_2 capture," Physical Chemistry Chemical Physics 14(13) (2012) 4365.

Stauffer, P.; Keating, G.; Middleton, R.; Viswanathan, H.; Berchtold, K.A.; Singh, R.P.; Pawar, R.; and Mancino, A., "Greening coal: breakthroughs and challenges in carbon capture and storage," Environmental Science & Technology, 45 (2011) 8597.

Krishnan, G.D.; Steele, D.; O'Brien, K.C.; Callahan, R.; Berchtold, K.A.; and Figueroa, J.D., "Simulation of a process to capture CO_2 From IGCC syngas using a high temperature PBI membrane," Energy Procedia, 1(1) (2009) 4079.

O'Brien, K.C.; Krishnan, G.; Berchtold, K.A.; and Figueroa, J.D., et. al., "Towards a pilot-scale membrane system for pre-combustion CO_2 separation," Energy Procedia, 1(1) (2009) 287.

PRE-COMBUSTION CARBON DIOXIDE CAPTURE BY A NEW DUAL-PHASE CERAMIC-CARBONATE MEMBRANE REACTOR

technology maturity:

Bench-Scale Using Simulated Syngas

project focus:

Dual-Phase Ceramic-Carbonate Membrane Reactor

participant:

Arizona State University

project number:

FE0000470

NETL project manager:

Elaine Everitt
elaine.everitt@netl.doe.gov

principal investigator:

Jerry Y.S. Lin
Arizona State University
jerry.lin@asu.edu

partners:

None

performance period:

10/1/09 – 9/30/13

primary project goals

Arizona State University is developing a dual-phase, membrane-based separation device that will separate carbon dioxide (CO_2) from typical water-gas shift (WGS) mixture feeds and produce hydrogen (H_2), which can be introduced into the combustion turbines of integrated gasification combined cycle (IGCC) plants.

technical goals

- Synthesize chemically and thermally stable dual-phase, ceramic-carbonate membranes with CO_2 permeance and CO_2 selectivity (with respect to H_2, carbon monoxide [CO], or water [H_2O]) larger than
- 5×10^{-7}mol/m^2/s/Pa and 500.
- Fabricate tubular dual-phase membranes and membrane reactor modules suitable for WGS membrane reactor applications.
- Identify experimental conditions for WGS in the dual-phase membrane reactor that will produce the hydrogen stream with at least 93 percent purity and the CO_2 stream with at least 95 percent purity.

technical content

A membrane separation device consisting of a porous metal phase and a molten carbonate phase can conduct carbonate ion ($CO_3$2-) at a high rate. The metal-carbonate membranes only conduct electrons and oxygen (O_2) should be mixed with CO_2 in the feed in order to convert CO_2 to CO_3= ions. However, the presence of O_2 can also oxidize the metallic support and reduce its electronic conductivity, and thus CO_2 permeability. The problem can be solved by the proposed dual-phase, ceramic-carbonate membrane configuration consisting of a porous ionic conducting ceramic phase and a molten carbonate phase.

At the upstream surface, CO_2 reacts with oxygen ions supplied from the ceramic phase to form CO_3=, which transports through the molten carbonate phase towards the downstream surface of the membrane. On the downstream surface, the reverse surface

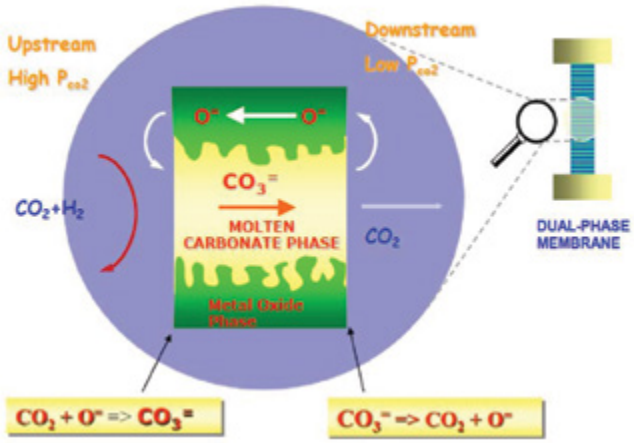

Figure 1: Concept of Dual-Phase Membrane

reaction takes place, converting CO_3= to CO_2, with O= released and transported back through the ceramic phase towards the upstream surface of the membrane. The net effect is permeation of neutral CO_2 through the membrane driven by the CO_2 pressure gradient. The dual-phase membrane will be made of continuous thin meso-porous oxygen ionic-conducting ceramic layer filled with a molten carbonate, supported on porous stainless steel or other metal, with an intermediate layer of sub-micron, pore-sized oxygen ionic conducting material.

Development of this dual-phase membrane will be divided in to two phases. Phase I work will include identifying optimum conditions for synthesis of adequate membrane supports and the dual-phase membranes in disk geometry and studying gas permeation properties of the membranes. The second part of the Phase I work will be focused on fabrication of the dual-phase membranes in tubular geometries and the study of permeation, chemical, and mechanical stability of the tubular membranes relevant to their uses in membrane reactors for WGS reaction.

Phase II work will be directed towards studying the dual-phase membrane reactor performance for WGS reaction for hydrogen production and CO_2 capture. The work includes synthesis and kinetic study of a high-temperature WGS catalyst and experimental and modeling study of WGS reaction on the dual-phase membrane reactors. The experimental data will be compared with modeling results to identify optimum operating conditions for WGS reaction. The project will perform an economic analysis using the dual-phase membrane as a WGS reactor for hydrogen production and CO_2 capture for an IGGC plant.

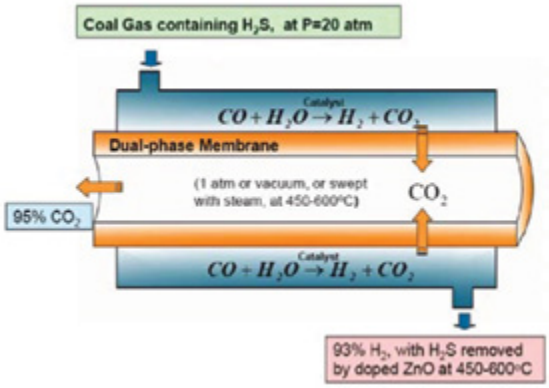

Figure 1: Proposed Membrane Reactor for WGS Reaction

TABLE 1: MEMBRANE-BASED CO_2 SEPARATIONS

	Units	Current R&D Value	Target R&D Value
Materials Properties			
Materials of Fabrication for Selective Layer		Li_2/K_2CO_3	Doped Li_2/K_2CO_3
Materials of Fabrication for Support Layer		Porous Stainless Steel	Fast-ionic conductors (doped ZrO_2, CeO_2)
Nominal Thickness of Selective Layer	µm	2,000	100
Membrane Geometry		Disk	Tube
Maximum Trans-Membrane Pressure	bar	2	>6
Hours Tested Without Significant Degradation		N/A	1,000
Manufacturing Cost for Membrane Material	$/m^2	/	/
Membrane Performance			
Temperature	°C	700 – 900	500 – 700
H_2 Pressure Normalized Flux	GPU or equivalent	600	>1,000
H_2/H_2O Selectivity	-	300	>1,000
H_2/CO_2 Selectivity	-	300	>1,000
H_2/H_2S Selectivity	-	-	>1,000
Sulfur Tolerance	ppm		
Type of Measurement	-	Mixed	Mixed
Proposed Module Design			
Flow Arrangement	-	Flat Disk	Tube
Packing Density	m^2/m^3	10	60
Shell-Side Fluid	-		Syngas/CO_2 at low pressure

TABLE 1: MEMBRANE-BASED CO_2 SEPARATIONS

	Units	Current R&D Value	Target R&D Value
Syngas Gas Flowrate	kg/hr		
CO_2 Recovery, Purity, and Pressure	% / % / bar		
H_2 Recovery, Purity, and Pressure	% / % / bar		
Pressure Drops Shell/Tube Side	bar		
Estimated Module Cost of Manufacturing and Installation	$ / kg/hr		

Definitions:

Membrane Geometry – Flat discs or sheets, hollow fibers, tubes, etc.

Pressure Normalized Flux – For materials that display a linear dependence of flux on partial pressure differential, this is equivalent to the membrane's permeance.

GPU – Gas Permeation Unit, which is equivalent to 10^{-6} cm^3 (1 atm, 0°C)/cm^2/s/cm Hg. For non-linear materials, the dimensional units reported should be based on flux measured in cm^3 (1 atm, 0°C)/cm^2/s with pressures measured in cm Hg. Note: 1 GPU = 3.3464×10^{-6} kg mol/m^2-s-kPa [SI units].

Type of Measurement – Either mixed or pure gas measurements; projected permeance and selectivities should be for mixture of gases found in pre-conditioned syngas.

Flow Arrangement – Typical gas-separation module designs include spiral-wound sheets, hollow-fiber bundles, shell-and-tube, and plate-and-frame, which result in either co-current, counter-current, cross-flow arrangements, or some complex combination of these.

Packing Density – Ratio of the active surface area of the membrane to the volume of the module.

Shell-Side Fluid – Either the permeate (H_2-rich) or retentate (syngas) stream.

Estimated Cost – Basis is kg/hr of CO_2 in CO_2-rich product gas; assuming targets are met.

Other Parameter Descriptions:

Membrane Permeation Mechanism – Carbon dioxide permeates through by combined transport of carbonate ions in the molten carbonate phase and oxygen ions in the solid metal-oxide phase.

Contaminant Resistance – The membrane to be stable in 0.1 to 1 percent atmosphere containing hydrogen sulfide (H_2S).

Proposed Module Design – Shell-tube module.

technology advantages

- WGS reaction at one temperature (about 400°C).
- Separation of CO_2 and H_2 mixture in one step.
- Production of high-pressure hydrogen stream.

R&D challenges

- Failure to obtain sufficiently high CO_2 permeance due to a rate-limiting surface reaction.
- Undesired surface properties of ceramic supports resulting in instability of the carbonate in the support pores.

results to date/accomplishments

- Synthesis of dual-phase membrane disks.
- Tubular membranes were prepared via pressing technique using graphite powders.
- Fabrication techniques of pressing-sintering and centrifugal casting were successfully modified to optimize support micro-structure.
- Thin, dual-phase membranes on porous support of disk and tubular geometries were successfully fabricated.
- High CO_2 selectivity and good CO_2 permeance through the membranes were demonstrated.

next steps

- Modeling and analysis of dual-phase membrane reactor for WGS.
- Studying separation and permeation properties of dual-phase membranes under syngas conditions.
- Studying WGS reaction in the dual-phase membrane reactor.

available reports/technical papers/presentations

Lu, B.; and Lin, Y.S., "Sol-gel synthesis and characterization of mesoporous yttria stabilized zirconia membranes with graded pore structure," J. Materials Sci., 46, 7056-7066 (2011).

Norton, T.T.; and Lin, Y.S., "Transient Oxygen Permeation and Surface Catalytic Properties of Lanthanum Cobaltite Membrane under Oxygen-Methane Gradient," Ind. Eng. Chem. Res., 51, 12917-12925(2012).

Lin, J.Y.S.; Norton, T.; Ortiz-Landeros, J.; Lu, B.; and Wang, H., "Pre-Combustion Carbon Dioxide Capture by a New Dual-Phase Ceramic-Carbonate Membrane Reactor," presented at 2012 NETL CO_2 Capture Technology Meeting in Pittsburgh, PA, in July 2012.

Rui, Z.B.; Anderson , M.; Li, Y.D.; and Lin, Y.S., "Ionic Conducting Ceramic and Carbonate Dual Phase Membranes for Carbon Dioxide Separation," J. Membrane Sci., 417-418, 174-182 (2012).

Anderson, M.; and Lin, Y.S., "Carbon Dioxide Separation and Dry Reforming of Methane for Synthesis of Syngas by a Dual-Phase Membrane Reactor," AIChE J., Accepted (2013).

NANOPOROUS, METAL CARBIDE, SURFACE DIFFUSION MEMBRANE FOR HIGH-TEMPERATURE HYDROGEN SEPARATIONS

technology maturity:

Bench-Scale Using Simulated Syngas

project focus:

Nanoporous Metal Carbide Membrane for H_2 Separation

participant:

Colorado School of Mines

project number:

FE0001009

NETL project manager:

Arun Bose
arun.bose@netl.doe.gov

principal investigator:

J. Douglas Way and Colin A. Wolden
Colorado School of Mines
dway@mines.edu
cwolden@mines.edu

partners:

Pall Corporation

performance period:

9/23/09 – 9/30/13

primary project goals

The Colorado School of Mines (CSM) is fabricating, characterizing, and optimizing transition metal carbide, composite membranes to separate hydrogen (H_2) from gas mixtures at high temperatures and pressures representative of gasification of carbon feedstocks such as coal or biomass. Supports will be either dense BCC metals (vanadium [V], niobium [Nb], tantalum [Ta], etc.) or porous stainless steel filters from Pall Corporation.

technical goals

- Determine if metal carbide layers can catalyze the dissociation of hydrogen on dense, Group V, BCC metal membranes (V, Nb, Ta, or their alloys).
- Thickness and microstructure of the carbide layer as well as carbide fabrication conditions will be varied to study the effects on the hydrogen permeability of the metal carbide composite membranes.
- Investigate the effect of synthetic water-gas shift (WGS) product mixtures on permeance and selectivity of metal carbide composite membranes.

technical content

CSM will fabricate, characterize, and optimize novel, high-temperature membranes for hydrogen separation based on metal (molybdenum [Mo] or tungsten [W]) carbides and sulfides. These membranes could be used in WGS environments for the simultaneous generation of pure H_2 and a stream enriched in carbon dioxide (CO_2) at high pressure for subsequent capture. These membranes contain no platinum group metals (PGMs) such as ruthenium (Ru), rhodium (Rh), palladium (Pd), osmium (Os), iridium (Ir), or platinum (Pt). The membrane-selective layer will be either a mesoporous carbide layer on a porous support, as shown in Figure 1, or a thin carbide layer on a dense BCC metal (V, Nb, Ta, or their alloys), as shown in Figure 2.

The CSM synthesis strategy consists of the use of a low-temperature, plasma-enhanced chemical vapor deposition (PECVD) process to form a dense metal oxide layer on tubular, stainless steel filtration membrane from Pall Corporation. The dense metal oxide layer will then be converted to a carbide phase containing small nanopores (2-3 nm) via a reduction process in a hydrocarbon/hydrogen environment. Tests will be used to identify membranes with larger pores that will subsequently be repaired to eliminate non-selective transport by viscous flow. Robust, porous stainless steel substrates will be used, which will facilitate high-temperature sealing and can be scaled-up as they have been modularized for industrial-scale filtration by Pall Corporation.

In addition to the experiments with porous molybdenum carbide (Mo_2C) to obtain a surface diffusion membrane, its use as a catalyst on crystalline, dense Group V metal membranes (e.g., V, Nb, and Ta) was also examined. In these experiments, an Mo_2C target was used to apply catalytic layers by sputtering on both sides of dense vanadium foils. This approach is shown schematically in Figure 2.

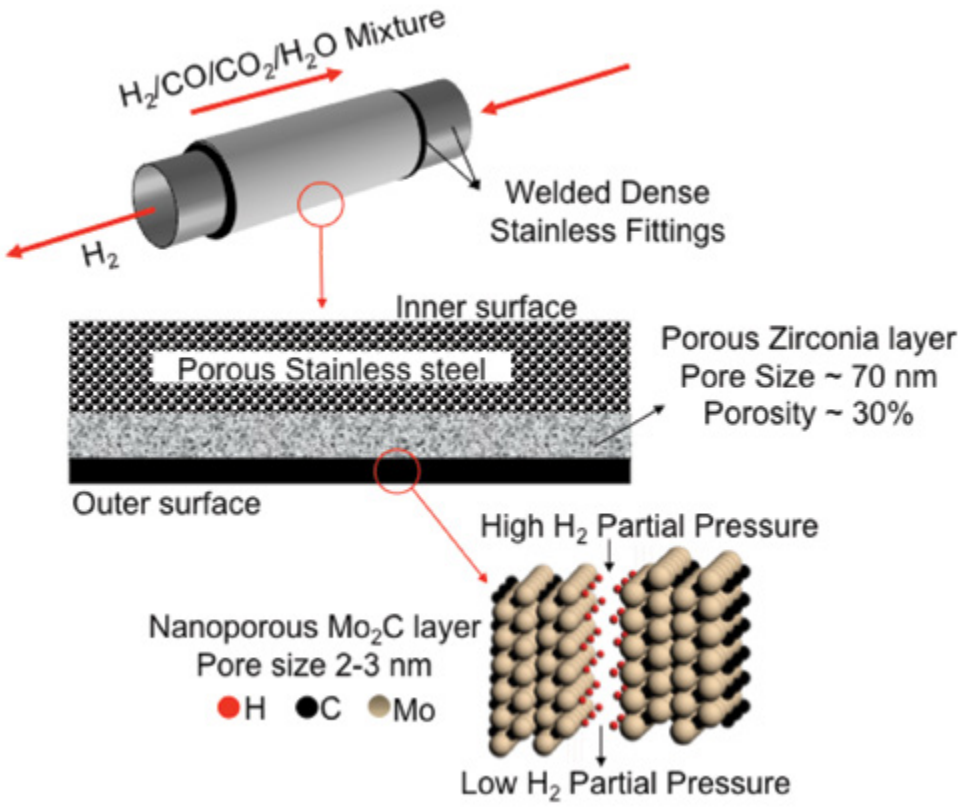

Figure 1: Schematic Diagram of Metal Carbide, Surface Diffusion Membrane Concept

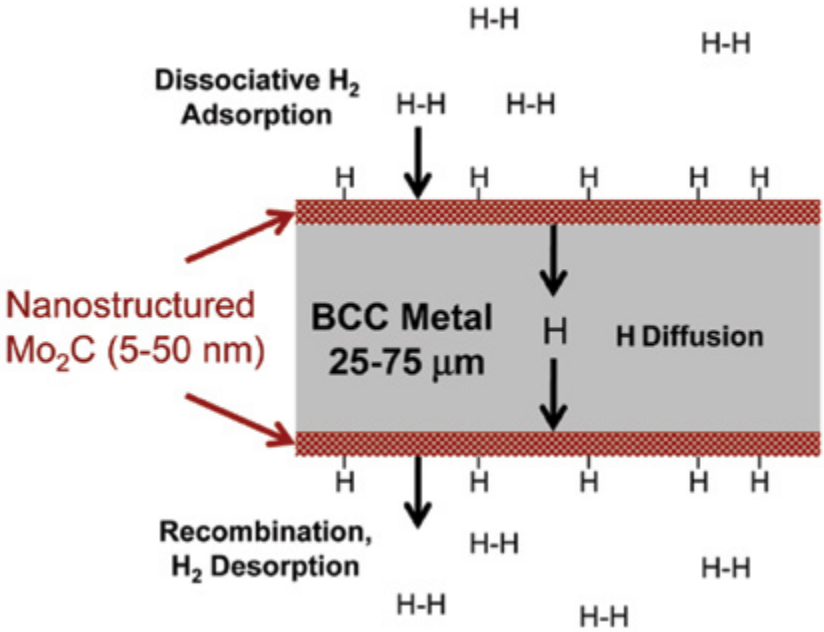

Figure 2: Schematic Diagram of Mo_2C Coated, Group V (Nb, V, Ta), BCC Metal Composite Membranes

TABLE 1: MEMBRANE PROCESS PARAMETERS

	Units	Current R&D Value	Target R&D Value
Materials Properties			
Materials of Fabrication for Selective Layer		Mo_2C	
Materials of Fabrication for Support Layer		50 micron thick V foil	
Nominal Thickness of Selective Layer	µm	0.01	
Membrane Geometry		Planar (flat discs)	
Maximum Trans-Membrane Pressure	bar	7.7	
Hours Tested Without Significant Degradation		168 h @ 600°C	
Manufacturing Cost for Membrane Material	$/m^2	Unknown	
Membrane Performance			
Temperature	°C	600	
H_2 Pressure Normalized Flux	GPU or equivalent	Pure H_2 flux = 1.69 cm^3(STP)/cm^2.s P(H_2 feed) = 579 cm Hg, permeate pressure = 62 cm Hg, no sweep gas	2010 Target value = 1.69 cm^3(STP)/cm^2.s for a differential H_2 pressure of 517 cm Hg = 100 psi
H_2/H_2O Selectivity	-	infinite	
H_2/CO_2 Selectivity	-	infinite	
H_2/H_2S Selectivity	-	N/A	
Sulfur Tolerance	ppm	N/A	
Type of Measurement	-	Pure gas	
Proposed Module Design			
Flow Arrangement	-	TBD	
Packing Density	m^2/m^3		
Shell-Side Fluid	-		
Syngas Gas Flowrate	kg/hr		
CO_2 Recovery, Purity, and Pressure	% / % / bar		
H_2 Recovery, Purity, and Pressure	% / % / bar		
Pressure Drops Shell/Tube Side	bar		
Estimated Module Cost of Manufacturing and Installation	$\frac{\$}{kg/hr}$		

Definitions:

Membrane Geometry – Flat discs or sheets, hollow fibers, tubes, etc.

Pressure Normalized Flux – For materials that display a linear dependence of flux on partial pressure differential, this is equivalent to the membrane's permeance.

GPU – Gas Permeation Unit, which is equivalent to 10^{-6} cm^3 (1 atm, 0°C)/cm^2/s/cm Hg. For non-linear materials, the dimensional units reported should be based on flux measured in cm^3 (1 atm, 0°C)/cm^2/s with pressures measured in cm Hg. Note: 1 GPU = 3.3464×10^{-6} kg mol/m^2-s-kPa [SI units].

Type of Measurement – Either mixed or pure gas measurements; projected permeance and selectivities should be for mixture of gases found in pre-conditioned syngas.

Flow Arrangement – Typical gas-separation module designs include spiral-wound sheets, hollow-fiber bundles, shell-and-tube, and plate-and-frame, which result in either co-current, counter-current, cross-flow arrangements, or some complex combination of these.

Packing Density – Ratio of the active surface area of the membrane to the volume of the module.

Shell-Side Fluid – Either the permeate (H_2-rich) or retentate (syngas) stream.

Estimated Cost – Basis is kg/hr of CO_2 in CO_2-rich product gas; assuming targets are met.

Other Parameter Descriptions:

Membrane Permeation Mechanism – Dissociative adsorption of H_2 on Mo carbide catalyst and surface diffusion through grain boundaries in the Mo_2C layer, followed by sorption and diffusion of atomic hydrogen through the BCC metal foil support. The atomic hydrogen then diffuses through the Mo_2C catalyst layer on the permeate side, followed by recombination and desorption of H_2. The transport mechanism is analogous to Pd and Pd-alloy membranes. Please see the journal articles listed below.

technology advantages

No PGMs needed, materials costs of Mo_2C/BCC metal membranes are a fraction of an equivalent Pd or Pd-alloy membrane. For example, Mo costs more than 300 times less than Pd, while V is more than 800 times cheaper than Pd.

R&D challenges

- Determine stability of Mo_2C/BCC metal membrane in mixed gases representative of a WGS equilibrium product mixture.
- Determination of rate-limiting step(s) in hydrogen permeation through carbide/BCC composite membranes.
- Improve selectivity of metal carbide surface diffusion membranes.
- Increase hydrogen flux of Mo_2C/BCC metal membranes to meet 2015 DOE NETL target value of 300 standard cubic feet per hour (scfh)/ft^2 for a hydrogen differential pressure of 100 pounds per square inch (psi).

results to date/accomplishments

- Experiments on Mo_2C/V composite membranes produced a pure H_2 flux as high as 200 scfh/ft^2 at 600°C and 100 pounds per square inch gauge (psig), with no detectable inert gas permeance during the testing period. This meets the NETL 2010 pure H_2 flux target. In other experiments with similar membranes, the pure H_2 flux was stable for 168 hours = one week. The H_2 permeability of our best Mo_2C/V membrane at 600°C is 2.4 times larger than Pd.
- TEM images after permeation testing confirm that a dense, 65-nm thick layer of Mo_2C was deposited on the V foil, and that there was no evidence of reduction of the Mo_2C layer or diffusion into the V foil after extended testing at 700°C.
- Fabricated an Mo_2C/V composite membrane by sputter coating Mo_2C catalyst on both sides of vanadium metal.
- After carburization, the best Mo_2C surface diffusion membrane, GTC 5, achieved a pure hydrogen flux of 367 scfh/ft^2 at a feed pressure of only 20 psig. The corresponding H_2/nitrogen (N_2) separation factor was 4.1.

next steps

- Vary the thickness of the V foil to determine the effect on the H_2 flux (25 to 75 microns). If bulk diffusion controls, then the flux should vary with the reciprocal of the membrane thickness.
- Investigate other BCC metals as substrates, such as Ta or V alloys (V85Ni15).
- Perform further analysis of the TEM sample using in-situ selected area diffraction.
- Develop techniques for in-situ reduction of pore size in substrates prior to deposition, and likewise to repair defects that may develop during carburization.
- Perform mixed gas permeation experiments with optimized flat sheet permeation cell.

available reports/technical papers/presentations

Wolden, C.A.; Adeyemo, K.; Verhuurt, R.H.J.; Ostwal, M.; and Way, J.D., "Mechanistic studies of hydrogen transport through Mo_2C/V composite membranes," Journal of Membrane Science, 427, 150-154 (2013). *http://dx.doi.org/10.1016/j.memsci.2012.09.042*.

Gade, S.K.; Chmelka, S.J.; Parks, S.; Way, J.D.; and Wolden, C.A., "Dense carbide/metal composite membranes for hydrogen separations without platinum group metals," Advanced Materials, 23(31), 3585–3589 (2011).

Wolden, C.A.; Pickerell, A.; Gawai, T.; Parks, S.; Hensley, J.; and Way, J. D., "Synthesis of β-Mo_2C Thin Films," ACS Applied Materials and Interfaces, 3, 517-521(2011).

AMORPHOUS ALLOY MEMBRANE FOR HIGH-TEMPERATURE HYDROGEN SEPARATION

primary project goals

Southwest Research Institute (SwRI) is modeling, fabricating, and testing thin-film amorphous alloy membranes that separate hydrogen (H_2) from a coal-based system with performance meeting the U.S. Department of Energy (DOE) 2015 targets of flux, selectivity, cost, and chemical and mechanical robustness, without the use of platinum group metals (PGMs). This project will use a combination of theoretical modeling, advanced physical vapor deposition fabricating, and laboratory and gasifier testing to develop amorphous alloy membranes.

technical goals

- Use density functional theory (DFT) methods to predict H_2 flux through amorphous zirconium (Zr)-based alloys as functions of operating temperature, H_2 feed pressure, membrane thickness, and trans-membrane pressure drop to advance testing of heuristics for alloy selection.
- Fabricate amorphous alloy membranes using magnetron sputtering with compositions consistent with those identified by H_2 flux modelling that are mechanically robust for application in a hydrogen separation unit.
- Test and establish thermal stability, pure gas (H_2 and nitrogen [N_2]) and mixture (H_2/carbon monoxide [CO] and H_2/hydrogen sulphide [H_2S]) permeation performance, and gasifier testing on optimized amorphous alloy membrane materials.

technical content

Thin-film amorphous alloy membranes are an emerging but promising new technology for industrial-scale hydrogen gas separations from coal-derived synthesis gas (syngas). This project uses a combination of theoretical modeling, advanced physical vapor deposition fabricating, and laboratory and gasifier testing to develop amorphous alloy membranes that have the potential to meet DOE targets in the testing strategies outlined in the National Energy Technology Laboratory (NETL) Membrane Test Protocol. The project is on schedule, with SwRI, Georgia Institute of Technology (GT), and Western Research Institute (WRI) all operating independently and concurrently. GT has applied the computational methodology to investigate a series of candidates with relatively high crystallization temperatures (>700K). GT performed extensive calculations for ternary element additions to zirconium copper (ZrCu), specifically for $Zr_{30}Cu60T10$ (T = scandium [Sc], yttrium [Y], niobium [Nb], molybdenum [Mo], technetium [Tc], ruthenium [Ru], rhodium [Rh], silver [Ag], tantalum [Ta], tungsten [W], rhenium [Re], osmium [Os], iridium [Ir], platinum [Pt], gold [Au]). The selection of 30:60:10 composition is used because $Zr_{30}Cu60Ti10$ showed good results in previous calculations. Among these materials, Sc, Ta, and Y have been identified as good ternary elements for $Zr_{30}Cu60T10$. To achieve fast surface H_2 dissociation process, a thin layer of palladium (Pd) is normally added on the amorphous film's surface as a catalytic layer. It is thus interesting to see the hydrogen properties in $Zr_{30}Cu60Pd10$ due to Pd diffusion into the host lattice. Hydrogen permeability through $Zr_{30}Cu60Pd10$ is not favora-

technology maturity:

Bench-Scale

project focus:

Amorphous Alloy Membrane for H_2 Separation

participant:

Southwest Research Institute (SwRI)

project number:

FE0001057

NETL project manager:

Steven Markovich
steven.markovich@netl.doe.gov

principal investigator:

Kent Coulter
SwRI
kent.coulter@swri.org

partners:

The Georgia Institute of Technology
Western Research Institute

performance period:

9/23/09 – 9/30/13

ble compared to either Pd, Zr54Cu46, or $Zr_{30}Cu60Ti10$. NiXZr1-X coatings with x ranging from 0.71 to 0.93 were deposited by magnetron co-sputtering process. It was found that as-deposited films are more amorphous with an increase of Zr content starting from x = 0.9 and reaching an X-ray diffraction (XRD)-amorphous state at x > 0.88.

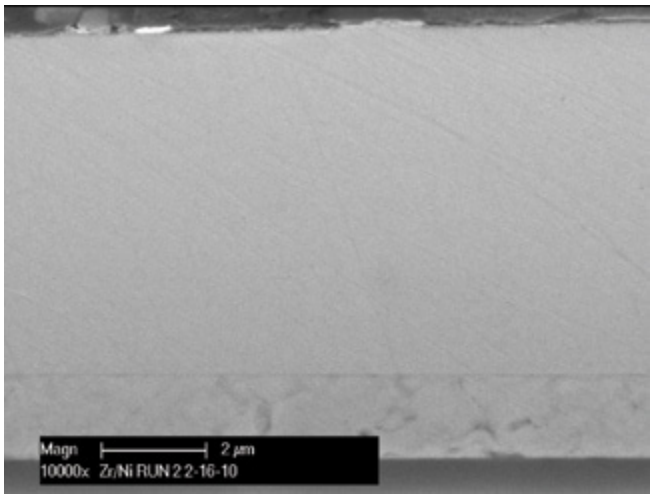

Figure 1: A Cross Section of a Ni93Zr7 Deposited Alloy

Mechanical properties of these coatings are strongly correlated with their composition. Amorphous films with higher Zr content have retained their XRD measured amorphous state after one hour of annealing in an argon (Ar)/2% H_2 atmosphere at 300°C. The partial re-crystallization in films with the highest Zr content occurs after 24 hours of annealing. The precise deposition of metal coatings by magnetron sources was demonstrated for deposition of CuZr and CuZrTi coatings. In these coatings, the Cu:Zr ratio was varied to line up with the previously calculated permeability data. The CuZr and CuZrTi all are amorphous as deposited, but none have survived 24 hours at 350°C. The species that form are not consistent with standard XRD spectra for CuZr species.

TABLE 1: MEMBRANE PROCESS PARAMETERS

	Units	Current R&D Value	Target R&D Value
Materials Properties			
Materials of Fabrication for Selective Layer		Amorphous Zr-based alloys	
Materials of Fabrication for Support Layer		Stainless steel	
Nominal Thickness of Selective Layer	µm	10	10
Membrane Geometry		Plate & frame	Plate & frame
Maximum Trans-Membrane Pressure	bar	1.4	6.9
Hours Tested Without Significant Degradation		1	120
Manufacturing Cost for Membrane Material	$/m^2	TBD	10,764
Membrane Performance			
Temperature	°C	300	250-500
H_2 Pressure Normalized Flux	GPU or equivalent	TBD	300 SCFH/ft^2
H_2/H_2O Selectivity	-	TBD	99.99
H_2/CO_2 Selectivity	-	TBD	99.99
H_2/H_2S Selectivity	-	TBD	99.99
Sulfur Tolerance	ppm	TBD	100
Type of Measurement	-	Mixed	Mixed
Proposed Module Design			

TABLE 1: MEMBRANE PROCESS PARAMETERS

	Units	Current R&D Value	Target R&D Value
Flow Arrangement	-	Shell and tube	
Packing Density	m^2/m^3	N/A	
Shell-Side Fluid	-	permeate	
Syngas Gas Flowrate	kg/hr	N/A	
CO_2 Recovery, Purity, and Pressure	% / % / bar	N/A	
H_2 Recovery, Purity, and Pressure	% / % / bar	N/A	
Pressure Drops Shell/Tube Side	bar	4.8	
Estimated Module Cost of Manufacturing and Installation	$\frac{\$}{kg/hr}$	TBD	

Definitions:

Membrane Geometry – Flat discs or sheets, hollow fibers, tubes, etc.

Pressure Normalized Flux – For materials that display a linear dependence of flux on partial pressure differential, this is equivalent to the membrane's permeance.

GPU – Gas Permeation Unit, which is equivalent to 10^{-6} cm^3 (1 atm, 0°C)/cm^2/s/cm Hg. For non-linear materials, the dimensional units reported should be based on flux measured in cm^3 (1 atm, 0°C)/cm^2/s with pressures measured in cm Hg. Note: 1 GPU = 3.3464×10^{-6} kg mol/m^2-s-kPa [SI units].

Type of Measurement – Either mixed or pure gas measurements; projected permeance and selectivities should be for mixture of gases found in pre-conditioned syngas.

Flow Arrangement – Typical gas-separation module designs include spiral-wound sheets, hollow-fiber bundles, shell-and-tube, and plate-and-frame, which result in either co-current, counter-current, cross-flow arrangements, or some complex combination of these.

Packing Density – Ratio of the active surface area of the membrane to the volume of the module.

Shell-Side Fluid – Either the permeate (H_2-rich) or retentate (syngas) stream.

Estimated Cost – Basis is kg/hr of CO_2 in CO_2-rich product gas; assuming targets are met.

Other Parameter Descriptions:

Membrane Permeation Mechanism – Solution diffusion.

Contaminant Resistance – TBD.

Syngas Pretreatment Requirements – TBD.

Membrane Replacement Requirements – None.

Waste Streams Generated – None.

technology advantages

- GT has developed a detailed DFT and a heuristic lattice model that is appropriate for rapidly characterizing hydrogen solubility and diffusion in the search for new promising alloys for membranes. This approach can be used as an initial tool for screening materials prior to using more expensive experimental investigations.
- The advanced vapor deposition methods used to construct the amorphous alloy membranes provide unique advantages compared to other membrane fabrication techniques. The high-power, pulsed magnetron sputtering and plasma-enhanced magnetron deposition methods are able to rapidly produce membranes of almost any alloy composition, providing excellent flexibility in terms of the materials and properties used in a membrane.

R&D challenges

Since they are thermodynamically metastable, amorphous alloys have the distinct disadvantage that they have a tendency to crystallize when heated to sufficiently high temperatures. This property places limits on the operating conditions at which amorphous membranes can be used.

results to date/accomplishments

- A new process was developed to apply a zirconia (ZrO_2) intermediate layer to the stainless steel porous support. Zirconium was sputter-deposited directly onto a Mott support, and the support was then annealed in air to 400°C.
- To achieve a fast-surface H_2 dissociation process, a thin layer of Pd is normally added on the amorphous film's surface as a catalytic layer. It is thus interesting to see the hydrogen properties in $Zr_{30}Cu_{60}Pd_{10}$ due to Pd diffusion into host lattice. Hydrogen permeability through $Zr_{30}Cu_{60}Pd_{10}$ is not favorable compared to either Pd, $Zr_{54}Cu_{46}$, or $Zr_{30}Cu_{60}Ti_{10}$.
- SwRI has demonstrated the precise deposition of metal coatings by magnetron sputtering for deposition of CuZr and CuZrTi coatings.
- GT performed extensive calculations for ternary element additions to ZrCu, specifically for $Zr_{30}Cu_{60}Ti_{10}$ (T= Sc, Y, Nb, Mo, Tc, Ru, Rh, Ag, Ta, W, Re, Os, Ir, Pt, Au). The selection of a 30:60:10 composition is because $Zr_{30}Cu_{60}Ti_{10}$ showed good results in previous calculations.
- WRI has conducted all X-ray powder crystallography, elemental composition tests, and thermal annealing tests. The ternary NiZrNb coatings have demonstrated superior thermal stability during 24 hours of annealing at 300°C in Ar/2%H_2, as compared to the binary NiZr coatings having similar Zr concentration

next steps

- GT will perform both solubility and diffusion calculations on ZrCu, ZrCuTi, HfCu, and HfCuTi systems.
- SwRI will fabricate amorphous alloys for testing.
- WRI will continue thermal stability testing in air and reducing environments and begin permeability testing.

available reports/technical papers/presentations

Coulter, K., "Amorphous Alloy Membrane for High Temperature Hydrogen Separation," presented at 2010 Annual Merit Review, June 2010, Washington, D.C.

HYDROGEN-SELECTIVE EXFOLIATED ZEOLITE MEMBRANES

primary project goals

The University of Minnesota researchers are further developing exfoliated zeolite coating technology for hydrogen (H_2) separation membranes, including membrane production methodology, and determining the feasibility of integration of the membrane into a water-gas shift (WGS) reactor model.

technical goals

- Develop and optimize a membrane production method for the exfoliated zeolite coating.
- The membrane must demonstrate high flux, high selectivity, and stable performance.
- Determine the feasibility of integrating these membranes in WGS reactors and integrated gasification combined cycle (IGCC) flow sheets.
- Performing a techno-economic analysis.

technical content

This project will further develop a novel silica molecular sieve membrane using exfoliated zeolite coatings with the potential to contribute to carbon capture by high-temperature separation of H_2 from carbon dioxide (CO_2) and other gases present in shifted synthesis gas (syngas). The project will establish procedures for the production of the required supply of these layered silicates, first optimizing the synthesis process of the exfoliated zeolite, then the layer-by-layer coating process.

The pore structure of the zeolite that is currently studied (MCM-22) includes ultra-small (potentially H_2-selective) sized pores defined by six SiO_4 tetrahedra (6-Member Ring pores: 6MR) along the c-axis. Therefore, c-out-of-plane oriented films are promising for H_2-separation membranes. MCM-22 has highly anisotropic plate or disk-like crystal shape, thin along the c-crystallographic axis and appropriate for achieving c-oriented films. Among available compositions, an all-silica and potentially hydrothermally stable composition has been reported, which could enable H_2-separations in applications like WGS reactors.

Membrane Microstructures Achieved Currently: MCM-22/silica composite films were fabricated using layer-by-layer deposition towards a nanoscale realization of the selective flake concept. The repetition of appropriate deposition cycles (i.e., particle deposition and subsequent silica coating) led to the gradual increase of separation performance achieving H_2/nitrogen (N_2) ideal selectivity as high as 120. The scanning electron microscope (SEM) cross-section image of a five-layer membrane along with its schematic is shown in Figure 1. The aim of the ongoing work is to improve performance using thinner flakes (exfoliated zeolite layers).

technology maturity:
Bench-Scale, Simulated Syngas

project focus:
Hydrogen-Selective Zeolite Membranes

participant:
University of Minnesota

project number:
FE0001322

NETL project manager:
Elaine Everitt
elaine.everitt@netl.doe.gov

principal investigator:
Michael Tsapatsis
University of Minnesota
tsapatsis@umn.edu

partners:
None

performance period:
10/1/09 – 9/30/13

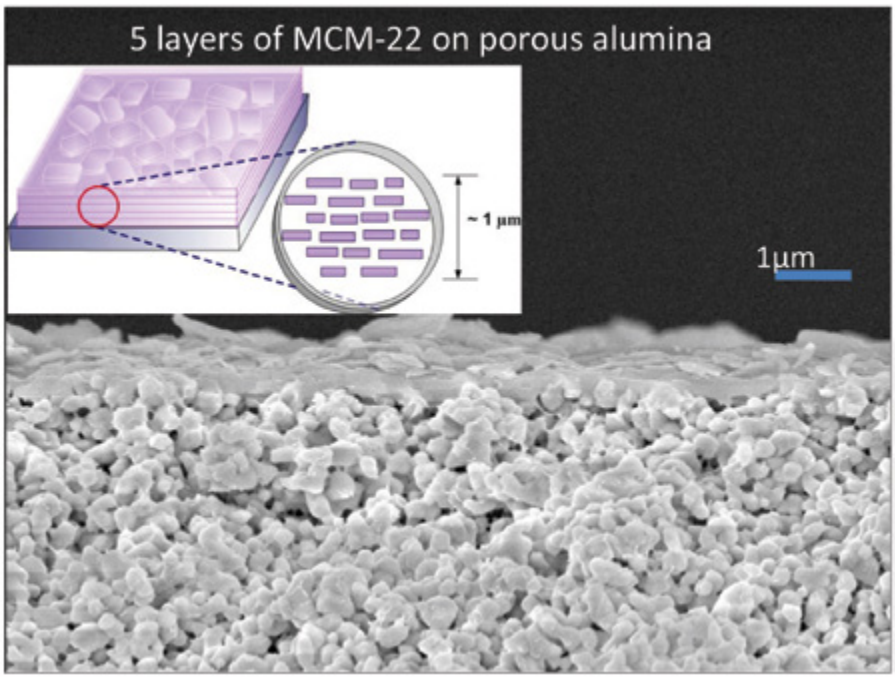

Figure 2: SEM Cross-Section Image of a Five-Layer Membrane Along with its Schematic

The H_2 permeance and selectivity to CO_2 and other gases, as well as hydrothermal stability, will be determined for the developed membrane. A series of tests will determine membrane separation performance. Performance testing configurations will include flat alumina supports up to 220°C; tubular membrane testing using single gases up to 600°C; tubular membrane testing using simulated feeds up to 600°C; and high-temperature, high-pressure testing of tubular supports. The membrane stability will be determined in a WGS environment. The three stability test configurations are in steam containing simulated feeds for exfoliated powders; in steam containing simulated feeds for alumina supported films; and in steam containing simulated feeds for stainless steel supported films.

The project will also integrate the membrane into a WGS membrane reactor model, integrate the model in an IGCC flow sheet, and perform techno-economic analysis and operability evaluation and analysis.

TABLE 1: MEMBRANE-BASED CO_2 SEPARATIONS

	Units	Current R&D Value	Target R&D Value
Materials Properties			
Materials of Fabrication for Selective Layer		MCM-22 plate like crystals	Exfoliated MCM-22 layers
Materials of Fabrication for Support Layer		Porous alumina discs (homemade)	Porous stainless steel tubes (commercial)
Nominal Thickness of Selective Layer	µm		
Membrane Geometry			
Maximum Trans-Membrane Pressure	bar		
Hours Tested Without Significant Degradation		48	250
Manufacturing Cost for Membrane Material	$/m^2		
Membrane Performance			
Temperature	°C	200	500
H_2 Pressure Normalized Flux	GPU or equivalent		
H_2/H_2O Selectivity	-		
H_2/CO_2 Selectivity	-	20	80 – 800

TABLE 1: MEMBRANE-BASED CO_2 SEPARATIONS

	Units	Current R&D Value	Target R&D Value
H_2/H_2S Selectivity	-		
Sulfur Tolerance	ppm		
Type of Measurement	-		
Proposed Module Design			
Flow Arrangement	-		
Packing Density	m^2/m^3		
Shell-Side Fluid	-		
Syngas Gas Flowrate	kg/hr		
CO_2 Recovery, Purity, and Pressure	% / % / bar		
H_2 Recovery, Purity, and Pressure	% / % / bar		
Pressure Drops Shell/Tube Side	bar	1 – 2	10
Estimated Module Cost of Manufacturing and Installation	$\frac{\$}{kg/hr}$		$3,000/m^2

Definitions:

Membrane Geometry – Flat discs or sheets, hollow fibers, tubes, etc.

Pressure Normalized Flux – For materials that display a linear dependence of flux on partial pressure differential, this is equivalent to the membrane's permeance.

GPU – Gas Permeation Unit, which is equivalent to 10^{-6} cm^3 (1 atm, 0°C)/cm^2/s/cm Hg. For non-linear materials, the dimensional units reported should be based on flux measured in cm^3 (1 atm, 0°C)/cm^2/s with pressures measured in cm Hg. Note: 1 GPU = 3.3464×10^{-6} kg mol/m^2-s-kPa [SI units].

Type of Measurement – Either mixed or pure gas measurements; projected permeance and selectivities should be for mixture of gases found in pre-conditioned syngas.

Flow Arrangement – Typical gas-separation module designs include spiral-wound sheets, hollow-fiber bundles, shell-and-tube, and plate-and-frame, which result in either co-current, counter-current, cross-flow arrangements, or some complex combination of these.

Packing Density – Ratio of the active surface area of the membrane to the volume of the module.

Shell-Side Fluid – Either the permeate (H_2-rich) or retentate (syngas) stream.

Estimated Cost – Basis is kg/hr of CO_2 in CO_2-rich product gas; assuming targets are met.

Other Parameter Descriptions:

Contaminant Resistance – These materials are crystalline silicates and the main issue is stability to steam. Other contaminants are not expected to create problems.

Syngas Pretreatment Requirements – To be determined as project progresses.

Waste Streams Generated – To be determined as project progresses.

Process Design Concept – Flow sheet/block flow diagram, if not included above.

technology advantages

This membrane technology will form the selective film using a coating process and pre-made components, and will have high selectivity, flux, and stability.

R&D challenges

- Dispersible exfoliated layers.
- Simple and efficient coatings process.

results to date/accomplishments

Synthesis of high aspect ratio exfoliated MCM-22 layers while preserving structure.

next steps

- Preparation of layer-by-layer coatings of exfoliated MCM-22 layers.
- Membrane testing for separation performance.
- Stability testing on exfoliated MCM-22 membranes in WGS environment.

available reports/technical papers/presentations

Tsapatsis, M.; Daoutidis, P.; Lima, F.; Elyassi, B. " Hydrogen Selective Exfoliated Zeolite Membranes," presented at the 2012 NETL CO_2 Capture Technology Meeting in Pittsburgh, PA, July 2012. *http://www.netl.doe.gov/File%20Library/Events/2012/CO2%20Capture%20Meeting/F-Lima-UMn-Exfoliated-Zeolite-Membranes.pdf*.

Lima, Fernando V.; Daoutidis, Prodromos; Tsapatsis, Michael; et al., Modeling and Optimization of Membrane Reactors for Carbon Capture in Integrated Gasification Combined Cycle Units, Industrial & Engineering Chemistry Research, Volume: 51 Issue: 15 Pages: 5480-5489, April 18, 2012. Tsapatsis, Michael, Toward High-Throughput Zeolite Membranes, Science, Volume: 334 Issue: 6057 Pages: 767-768, November 11, 2011.

Varoon, Kumar; Zhang, Xueyi; Elyassi, Bahman; et al., Dispersible Exfoliated Zeolite Nanosheets and Their Application as a Selective Membrane, Science, Volume: 333 Issue: 6052 Pages: 72-75, October 7, 2011.

Tsapatsis, M.; Daoutidis, P.; Lima, F.; Elyassi, B. " Hydrogen Selective Exfoliated Zeolite Membranes," presented at the 2011 NETL CO_2 Capture Technology Meeting in Pittsburgh, PA, August 2011. *http://www.netl.doe.gov/File%20Library/Events/2011/co2capture/26Aug11--Lima-UMinn-H2-Selective-Zeolite-Membranes.pdf*.

Tsapatsis, M.; Daoutidis, P. "Hydrogen Selective Exfoliated Zeolite Membranes," presented at the 2010 NETL CO_2 Capture Technology Meeting in Pittsburgh, PA, September 2010. *http://www.netl.doe.gov/File%20Library/Events/2010/co2capture/Michael-Tsapatsis-FE0001322.pdf*.

Maheshwari, S.; Kumar, S.; Bates, F.S.; Penn, R.L.; Shantz, D.F.; Tsapatsis, M. Journal of the American Chemical Society 130, 1507-1516 (2008) Layer Structure Preservation during Swelling, Pillaring and Exfoliation of a Zeolite Precursor.

Choi, J.; Tsapatsis, M. Journal of the American Chemical Society 132(2), 448-449 (2010) MCM-22/Silica Selective Flake Nanocomposite Membranes for Hydrogen Separations.

INTEGRATED WATER-GAS SHIFT MEMBRANE REACTORS UTILIZING NOVEL, NON-PRECIOUS METAL MIXED-MATRIX MEMBRANES

primary project goals

The University of Texas at Dallas (UTD) is preparing novel, non-precious metal mixed-matrix membranes (MMMs) in flat, tubular, and hollow fiber geometries based on polymer composites with nanoparticles of zeolitic imidazolate frameworks (ZIFs). Membrane performance to separate hydrogen from synthesis gas (syngas) (e.g., hydrogen [H_2], carbon monoxide [CO], carbon dioxide [CO_2], water [H_2O]) generated during coal gasification will be evaluated in an integrated water-gas shift (WGS) membrane reactor. The goal is to exploit the high surface areas, adsorption capacities, and sieving capabilities of the nanoporous ZIF additives to achieve unprecedented, selective transport of hydrogen.

technical goals

- To prepare novel, non-precious metal MMMs in flat, tubular, and hollow fiber geometries based on polymer composites with nanoparticles of ZIFs in an integrated WGS membrane reactor.
- To prepare a high-performance membrane to separate hydrogen from syngas (e.g., H_2, CO, CO_2, H_2O) generated during coal gasification that will be evaluated in an integrated WGS membrane reactor using National Energy Technology Laboratory (NETL) test protocols.

technical content

The utilization of coal as a clean source of energy relies on the successful development and implementation of carbon capture and sequestration (CCS) technologies with a minimal impact on energy generation costs. The efficient conversion of coal into H_2 and CO_2 requires membranes that are stable at high temperatures and pressures (300 to 500°C, 15-30 bar, Table 1) with an H_2/CO_2 separation selectivity that provides H_2 with >99 percent purity. A minimum temperature of 250 to 300°C is required to maintain catalyst activity for the efficient conversion of syngas (>95 percent with commercial low-temperature Cuo-Zno-Al2O_3 catalyst), while a high H_2 flux across the membrane (>300 $ft^3_{stp}/ft^2 \cdot h$) drives the reaction.

$$CO + H_2O \leftrightarrow H_2 + CO_2 \quad \Delta H = -41\ kJ/mol$$

MMMs combine the polymers' processability with the ZIFs' superior permselective properties for H_2/CO_2 separations. Selected polymer membranes (Figure 1) displayed increased H_2 and CO_2 permeabilities (up to a 45-fold increase) at 300°C and up to 30 bar (Figure 2). Hydrogen sorption isotherms of selected ZIFs showed H_2 adsorption up to 350°C and 100 bar, while the integrity of the framework was maintained.

The UTD Membranes Team has fabricated robust, defect-free MMMs with good metal-organic framework (MOF)/polymer interfaces with MOF loadings up to 80 percent (w/w). Hydrogen-selective ZIFs (an MOF subfamily) and thermally stable polymers, such as poly-

technology maturity:

Bench- to Pilot-Scale

project focus:

Non-Precious Metal Membranes for Hydrogen Separation

participant:

University of Texas, Dallas

project number:

FE0001293

NETL project manager:

Arun Bose
arun.bose@netl.doe.gov

principal investigator:

John P. Ferraris
University of Texas at Dallas
ferraris@utdallas.edu

partners:

Santa Fe Science & Technology Inc.

performance period:

9/30/09 – 9/30/13

imides (synthesized 6FDA-based polymers and commercial VTEC PI-1388), polybenzimidazole (PBI), and Polymers of Intrinsic Microporosity-1 (PIM-1), were fabricated into MMMs. These MMMs demonstrated increased H_2 permeability, and crosslinking polyimides further increased the H_2/CO_2 selectivity (Figure 3). These membranes will be tested under WGS reaction conditions (300°C, 15 to 30 bar) in a membrane reactor.

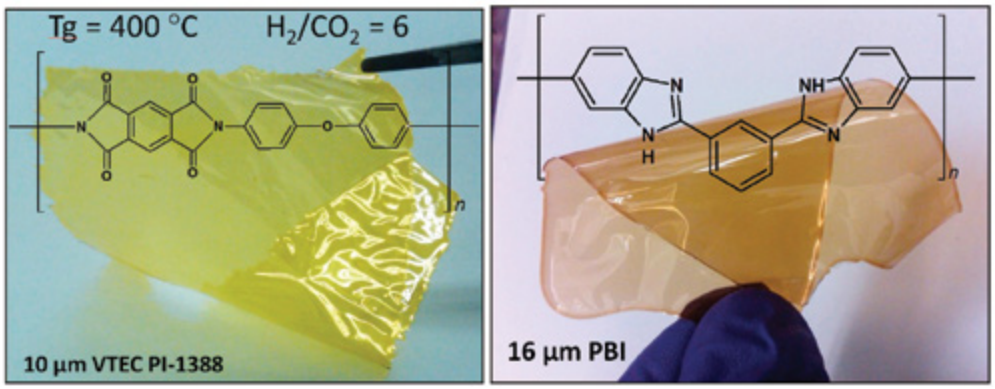

Figure 1: Polymer Membranes (left: VTEC PI-1388; right: polybenzimidazole, PBI) Annealed at 250°C

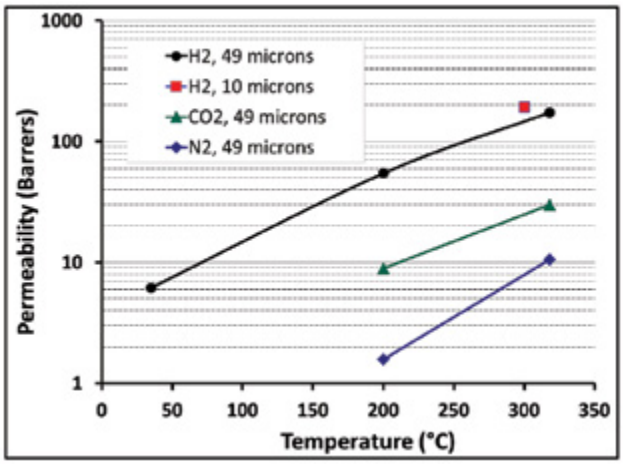

Figure 2: VTEC Polymer Gas Permeability at High Temperatures (35 to 325°C) and up to 30 atm

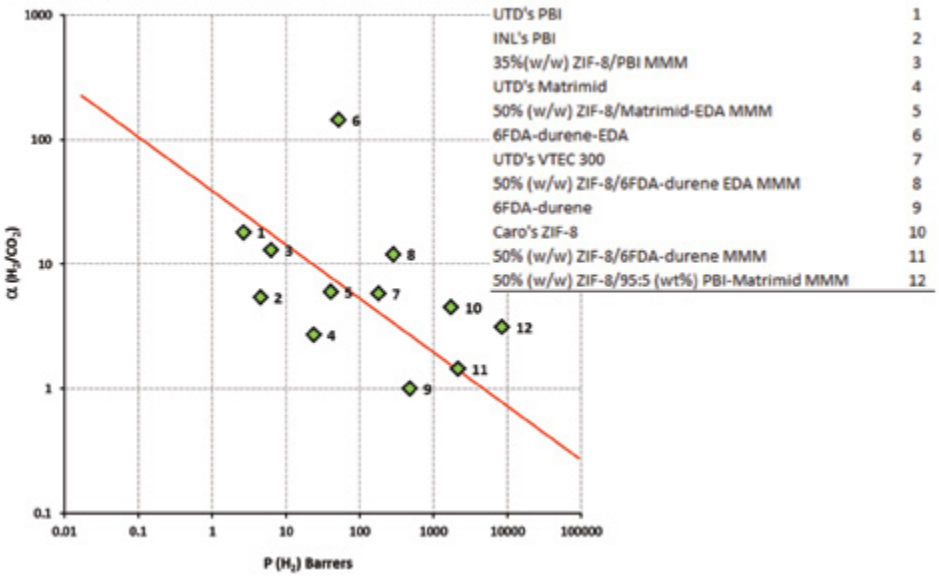

Figure 3: Robeson Upper Bound for H_2/CO_2 Separations for Membranes Tested

TABLE 1: MEMBRANE PROCESS PARAMETERS

	Units	Current R&D Value	Target R&D Value
Materials Properties			
Materials of Fabrication for Selective Layer		ZIF/polymer	
Materials of Fabrication for Support Layer		Polymer, ZIF/polymer	Polymer, alumina
Nominal Thickness of Selective Layer	µm	70	<1
Membrane Geometry		Hollow fiber	Hollow fiber
Maximum Trans-Membrane Pressure	bar	15	30
Hours Tested Without Significant Degradation		>120	120
Manufacturing Cost for Membrane Material	$/m^2	2.64[1]	-
Membrane Performance			
Temperature	°C	300	300
H_2 Pressure Normalized Flux	GPU or equivalent	1.6	>120
H_2/H_2O Selectivity	-	-	
H_2/CO_2 Selectivity	-	22	>22
H_2/H_2S Selectivity	-	-	
Sulfur Tolerance	ppm	-	
Type of Measurement	-	Pure gas	
Proposed Module Design			
Flow Arrangement	-	Counter-current	
Packing Density	m^2/m^3	40	
Shell-Side Fluid	-	Retentate (Syngas, 30% H_2, 40% CO, 30% CO_2)	
Syngas Gas Flowrate	kg/hr	0.0125	
CO_2 Recovery, Purity, and Pressure	% / % / bar	97%, 70%, 7.5 bar	
H_2 Recovery, Purity, and Pressure	% / % / bar	60%, 96%, 1 bar	
Pressure Drops Shell/Tube Side	bar	15	
Estimated Module Cost of Manufacturing and Installation	$ / kg/hr		

1. Cost estimate for PBI hollow fibers from Santa Fe Science and Technology, Inc.
2. Thin-walled PBI hollow fibers became brittle and hard to handle. We have transitioned to tubular membranes that comprise thin PBI membranes on highly porous and thermally stable stainless steel supports. The design of this module is shown in Figure 6.

Definitions:

Membrane Geometry – Flat discs or sheets, hollow fibers, tubes, etc.

Pressure Normalized Flux – For materials that display a linear dependence of flux on partial pressure differential, this is equivalent to the membrane's permeance.

GPU – Gas Permeation Unit, which is equivalent to 10^{-6} cm^3 (1 atm, 0°C)/cm^2/s/cm Hg. For non-linear materials, the dimensional units reported should be based on flux measured in cm^3 (1 atm, 0°C)/cm^2/s with pressures measured in cm Hg. Note: 1 GPU = 3.3464×10^{-6} kg mol/m^2-s-kPa [SI units].

Type of Measurement – Either mixed or pure gas measurements; projected permeance and selectivities should be for mixture of gases found in pre-conditioned syngas.

Flow Arrangement – Typical gas-separation module designs include spiral-wound sheets, hollow-fiber bundles, shell-and-tube, and plate-and-frame, which result in either co-current, counter-current, cross-flow arrangements, or some complex combination of these.

Packing Density – Ratio of the active surface area of the membrane to the volume of the module.

Shell-Side Fluid – Either the permeate (H_2-rich) or retentate (syngas) stream.

Estimated Cost – Basis is kg/hr of CO_2 in CO_2-rich product gas; assuming targets are met.

Other Parameter Descriptions:

Membrane Permeation Mechanism –

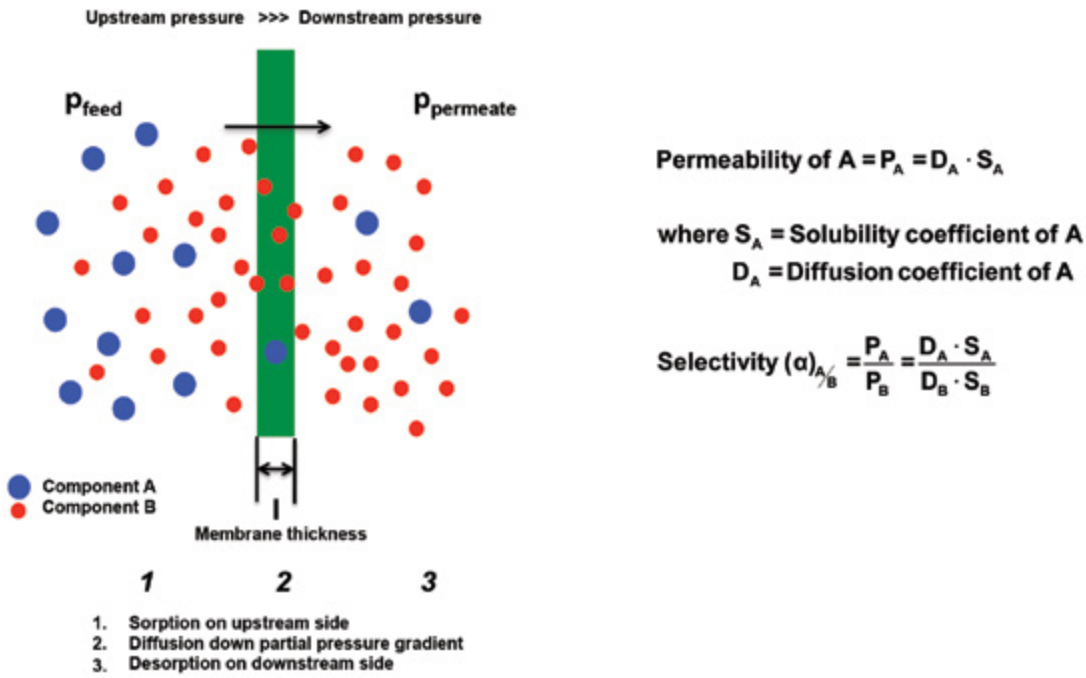

Figure 4: Illustration of Solution-Diffusion Mechanism of Gas Transport Through Polymers

The permeants initially adsorb on the membrane surface and then diffuse through the membrane under a partial-pressure differential. The differences in the solubilities of the gases in the membrane and the rates of permeant diffusion through the membrane result in gas separation. The permeability coefficient, P, of a polymer membrane can be described by the product of the diffusion coefficient, D, and solubility, S, [Permeability, P = Diffusion (D) x Solubility (S)]. Membrane performance can be measured by its permeability (P) and selectivity (α). The permeability represents the intrinsic productivity of the membrane as defined by the flux (i) normalized by the membrane thickness and partial-pressure difference across the membrane. Selectivity (α) is the ratio of the permeabilities of the gases to be separated and provides a measure of the purity of the separated gas.

Contaminant Resistance – The membrane materials, as well as the reactor components, should be resistant to hydrogen sulfide that is present in the upstream syngas.

Syngas Pretreatment Requirements – The temperature should not exceed 300°C for the low-temperature WGS catalyst used.

Membrane Replacement Requirements – A replacement would require a membrane fabricated on a stainless steel support mounted with compression fittings, ferrules/gaskets, etc.

Waste Streams Generated – Anticipated waste includes H_2O and CO. Waste CO will be vented out as CO_2.

Process Design Concept –

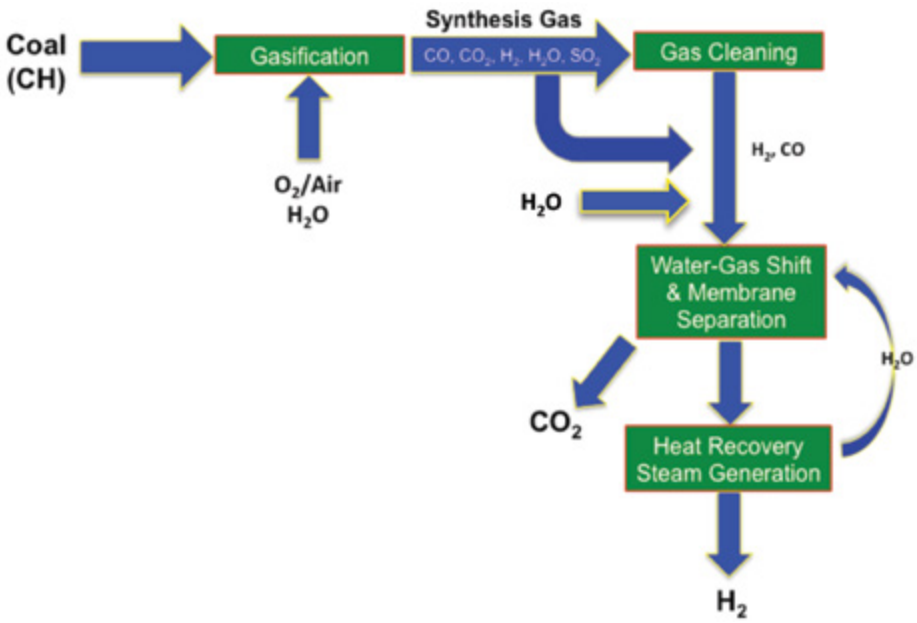

Figure 5: Hydrogen Recovery Through the WGS Reaction

Proposed Module Design –

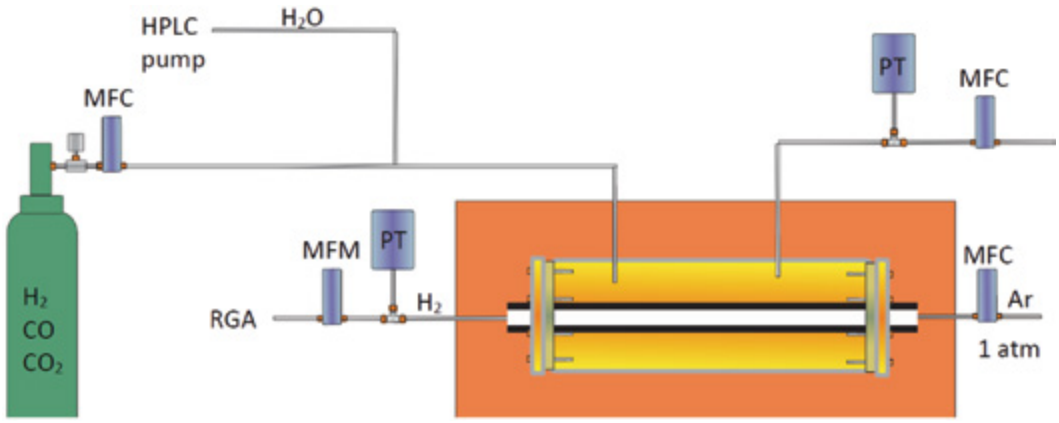

Figure 6: WGS Reactor for Testing Tubular Membranes

Gasifier syngas conditions and composition upstream of the shift reactors:

- Temperature: 260-371°C.
- Pressure: 400+ pounds per square inch absolute (psia).
- Syngas composition (mole %): 29.2 H_2, 34.3 CO, 13.6 CO_2, 18.9 H_2O, 2.5 CH_4, 0.056 H_2S, 0.28 NH_3, 0.032 HCN.

technology advantages

- Low-cost, low-carbon footprint; readily available materials for ZIF, polymer, and membrane preparation. Non-precious metals (i.e., zinc, copper, and aluminum) can be easily obtained or, for organic compounds, synthesized from commercially available materials.
- Membrane fabrication follows simple procedures: mix and cast. Dispersions of ZIFs and polymer solutions are easily prepared without the use of expensive equipment. Casting solvents can be re-utilized.
- Membrane geometry can be adapted to different module types: flat, spiral wound, hollow fiber, or tubular.

R&D challenges

- Obtaining defect-free polymer/ZIF interfaces remains a challenge for MMMs.
- Obtaining required gas fluxes in MMMs.

results to date/accomplishments

- Thermally and chemically stable nanosized ZIFs with high affinity and selectivity for H_2 and CO_2 were synthesized based on reported procedures and used in MMMs. Robust polyimides (Matrimid®, VTEC PI-1388, and 6FDA-based PIs), PBI, and PIM-1 were employed.
- High-performance polymers (VTEC polyimide and polybenzimidazole, PBI) were tested for gas permeation (H_2, CO_2, and nitrogen [N_2]). VTEC was tested up to 30 bar and 300°C. The hydrogen permeability for PBI at 300°C increased to 73 Barrers with a H_2/CO_2 selectivity of 28.
- The measured H_2/CO_2 selectivity ($\alpha = 144$) for 6FDA-durene treated with ethylenediamine (EDA) results from a reduction in polymer chain mobility, which is accompanied by a dramatic decrease in permeability compared to the pure polymer. Incorporation of ZIFs into MMMs is known to increase permeability. ZIF-8/polymer (Matrimid® and 6FDA-durene) MMMs were crosslinked in an attempt to retain selectivity while increasing permeability (Figure 3).
- ZIF/PBI MMMs exhibited a 130 percent increase in H_2 permeability with a 28 percent reduction in H_2/CO_2 selectivity at 35°C and 3 bar. Membrane performance of a 35 percent (w/w) ZIF-8/PBI MMM at high temperatures and high pressures resulted in increased H_2 permeability and no change in selectivity.
- Fabrication and testing of uncoated PBI hollow fibers (collaborating with SFST, Inc.) up to 300°C and 15 atm. Thermally conditioned PBI hollow fibers exhibit reproducible flux and selectivity. At 300°C and 15 atm, these PBI HFs displayed a similar selectivity (≈22) to that of the flat PBI membrane.
- A membrane reactor was designed to meet U.S. Department of Energy (DOE) target conditions for the H_2/CO_2 separation at 300°C and 15 atm, considering a gas flux across the membrane of 300 $ft^3stp/ft^2 \cdot h$.

next steps

- Testing of thermally stable polymers and MMMs on stainless steel supports under NETL testing protocols.
- Testing of these tubular membranes under NETL testing protocols in the presence of a low-temperature WGS catalyst.

available reports/technical papers/presentations

Perez, E. V.; Balkus, Jr., K. J.; Ferraris, J. P.; Musselman, I. H., "Apparatus for gas permeation measurements at high pressure and high temperature" Rev. Sci. Instrum., submitted.

Musselman, I. H., "Polymeric-based membrane microstructure: past, present, and future," Plenary talk, 2012 North American Membrane Society (NAMS) annual meeting, New Orleans, LA, June 2012.

Kalaw, G. J. D.; Perez, E. V.; Musselman, I. H.; Balkus, Jr., K. J.; Ferraris, J. P., "ZIF-8/polybenzimidazole mixed-matrix membranes for gas separations," presented at 2012 NAMS annual meeting, New Orleans, LA, June 2012.

Wijenayake, S. N.; Balkus, Jr., K. J.; Musselman, I. H.; Ferraris, J. P., "Asymmetric mixed matrix membranes fabricated using a spin coating technique," (Poster), presented at 2012 NAMS annual meeting, New Orleans, LA, June 2012.

Ordoñez, M. J. C.; Balkus, Jr., K. J.; Ferraris, J. P.; Musselman, I. H., "Molecular sieving realized with ZIF-8/Matrimid® mixed-matrix membranes," J. Membr. Sci. 2010, 361, 28-37.

Ferraris, J.P., Presented at Strategic Center for Coal's Advanced Fuels Peer Review "Integrated water gas shift membrane reactors utilizing novel, non-precious metal mixed-matrix membranes," October 2010, in Morgantown, WV.

Zhang, Z.; Balkus, Jr., K. J.; Ferraris, J. P.; Musselman, I. H., "ZIF-7/Matrimid® mixed-matrix membranes for gas separations," (Poster), 2010 NAMS annual meeting, Washington, D.C, July 2010.

Balkus, Jr., K. J.; Ferraris, J. P.; Musselman, I. H., "Metal-organic framework mixed-matrix membranes for gas separations," presented at 16th International Zeolite Conference, Sorento, Italy, July 2010.

Kalaw, G. D.; Balkus, Jr., K. J.; Musselman, I. H.; Ferraris, J. P., "Perfluorocyclobutyl (PFCB) polymer/Basolite® Z1200 mixed-matrix membranes (MMMs) for gas separation applications," (Poster and Talk) 240th ACS National Meeting, Boston, MA, August 2010.

Ferraris, J. P.; Balkus, Jr., K. J.; Musselman, I. H.; Kalaw, G. J.; Ordoñez, M. C.; Wijenayake, S. N., "Mixed-matrix membranes (MMMs)comprising metal organic frameworks and novel perfluorocyclobutyl-based polymers or high temperature polyimides for gas separations," presented at PacifiChem 2010. Honolulu, HI, December 2010.

Musselman, I. H.; Ordoñez, M. C.; Zhang, Z.; Balkus, K. J.; Ferraris, J. P., "Polymer-based mixed-matrix membranes containing zeolitic imidazolate frameworks for gas separations," presented at PacifiChem 2010. Honolulu, HI, December 2010.

SUPPORTED MOLTEN METAL MEMBRANE (SMMM) FOR HYDROGEN SEPARATION

technology maturity:

Bench-Scale

project focus:

Supported Molten Metal Membranes

participant:

Worcester Polytechnic Institute

project number:

FE0001050

NETL project manager:

Steven Markovich
markovis@netl.doe.gov

principal investigator:

Ravindra Datta
Worcester Polytechnic Institute
rdatta@wpi.edu

partners:

None

performance period:

9/23/09 – 9/30/13

primary project goals

Worcester Polytechnic Institute (WPI) is developing and testing novel supported molten metal membranes (SMMMs) for hydrogen separation that meet the U.S. Department of Energy's (DOE) targets in terms of cost, operating conditions, permeability, selectivity, robustness, and longevity. These membranes are based on low-melting, non-precious group metals (e.g., tin [Sn], indium [In], and gallium [Ga]), as well as their alloys, supported as thin films on an inert porous ceramic support or a porous metal support with a ceramic intermetallic diffusion barrier.

technical goals

- Select molten metals and their supports, develop membrane fabrication protocols, and establish SMMM feasibility.
- Select and optimize final SMMM candidates and investigate permeability, selectivity, durability, and susceptibility to poisons, as well as microstructural, solubility, and diffusion characteristics.
- Investigate best SMMM candidate under increasingly realistic conditions.

technical content

Non-precious group metal hydrogen membranes are sought as an alternative to palladium (Pd)-based membranes, which are expensive, sensitive to poisons, and lack adequate durability. WPI is seeking to develop entirely novel hydrogen membranes based on molten metals because they have higher diffusivity and greater potential robustness to poisons such as carbon monoxide and sulfur. Molten metals also have an inherent ability to avoid sintering, hydrogen embrittlement, and thermal mismatch between the membrane and the support.

SMMMs have been shown to possess desirable hydrogen permeance. The chief obstacle that has emerged is finding suitable porous supports and intermetallic diffusion barrier layers that are adequately wetted by the molten metals, but are at the same time chemically inert, so that stable SMM membranes may be fabricated. A fine balance is critical because some chemical interaction between the liquid metal and the support is necessary for adequate wetting, while too much of it is detrimental to the membrane. Based on coupon and tubular support studies, it was found that porous stainless steel (PSS), Ni, or Inconel, oxidized at the usual temperature (700°C), do not provide an effective diffusion barrier that holds up to the liquid metals tested (In, Ga, Sn) because of their high reactivity, leading to the formation of intermetallic compounds. Ceramic membranes are more promising. Some (e.g., $Al2O_3$) are too inert to provide good wetting, while others are too reactive (e.g., quartz) and/or too fragile for compressive sealing.

Based on a thermodynamic and experimental screening, it has been determined that silicon carbide (SiC) is an excellent choice for support. However, the wetting characteristics of molten metal on SiC seemed to change with temperature and gaseous atmosphere, resulting in the development of leakage when hydrogen (H_2) is switched to inert helium (He)

to check selectivity. Experimental evidence indicates that the permeance of SMMM is high, being comparable to Pd, and it is relatively stable. It was determined that after a month of testing at temperatures up to 550ºC, the SMMM had thinned, possibly because of the formation of volatile hydrides at these operating temperatures.

WPI is also investigating theoretical mechanisms and modeling of hydrogen diffusion through molten metal membranes, as well as thermodynamic analysis of the effect of temperature, gas composition, and the nature of the substrate on wetting of molten metal. These efforts are providing insights into permeation mechanisms in SMMM and how it might be enhanced, as well as how the molten metal wettability and membrane stability might be enhanced by incorporating appropriate alloying materials. Alternate support configurations are planning to be explored to enhance membrane stability as the gas atmosphere changes.

TABLE 1: MEMBRANE PROCESS PARAMETERS

	Units	Current R&D Value	Target R&D Value
Materials Properties			
Materials of Fabrication for Selective Layer		In, Ga, Sn	Non-PGM
Materials of Fabrication for Support Layer		SiC	Durable
Nominal Thickness of Selective Layer	µm	250	
Membrane Geometry		Disc	Shell & tube, plate & frame
Maximum Trans-Membrane Pressure	bar	TBD	
Hours Tested Without Significant Degradation		250	
Manufacturing Cost for Membrane Material	$/m^2	TBD	
Membrane Performance			
Temperature	°C	450 – 600	300 – 600
H_2 Pressure Normalized Flux	GPU or equivalent	250	
H_2/H_2O Selectivity	-	TBD	
H_2/CO_2 Selectivity	-	TBD	
H_2/H_2S Selectivity	-	TBD	
Sulfur Tolerance	ppm	TBD	
Type of Measurement	-		
Proposed Module Design			
Flow Arrangement	-		
Packing Density	m^2/m^3		
Shell-Side Fluid	-		
Syngas Gas Flowrate	kg/hr		
CO_2 Recovery, Purity, and Pressure	% / % / bar		
H_2 Recovery, Purity, and Pressure	% / % / bar		
Pressure Drops Shell/Tube Side	bar		
Estimated Module Cost of Manufacturing and Installation	$\frac{\$}{kg/hr}$		

Definitions:

Membrane Geometry – Flat discs or sheets, hollow fibers, tubes, etc.

Pressure Normalized Flux – For materials that display a linear dependence of flux on partial pressure differential, this is equivalent to the membrane's permeance.

GPU – Gas Permeation Unit, which is equivalent to 10^{-6} cm^3 (1 atm, 0°C)/cm^2/s/cm Hg. For non-linear materials, the dimensional units reported should be based on flux measured in cm^3 (1 atm, 0°C)/cm^2/s with pressures measured in cm Hg. Note: 1 GPU = 3.3464×10^{-6} kg mol/m^2-s-kPa [SI units].

Type of Measurement – Either mixed or pure gas measurements; projected permeance and selectivities should be for mixture of gases found in pre-conditioned syngas.

Flow Arrangement – Typical gas-separation module designs include spiral-wound sheets, hollow-fiber bundles, shell-and-tube, and plate-and-frame, which result in either co-current, counter-current, cross-flow arrangements, or some complex combination of these.

Packing Density – Ratio of the active surface area of the membrane to the volume of the module.

Shell-Side Fluid – Either the permeate (H_2-rich) or retentate (syngas) stream.

Estimated Cost – Basis is kg/hr of CO_2 in CO_2-rich product gas; assuming targets are met.

Other Parameter Descriptions:

Membrane Permeation Mechanism – The mechanism of hydrogen permeation in a liquid metal is similar to that in a solid metal membrane such as Pd, as shown schematically in Figure 1.

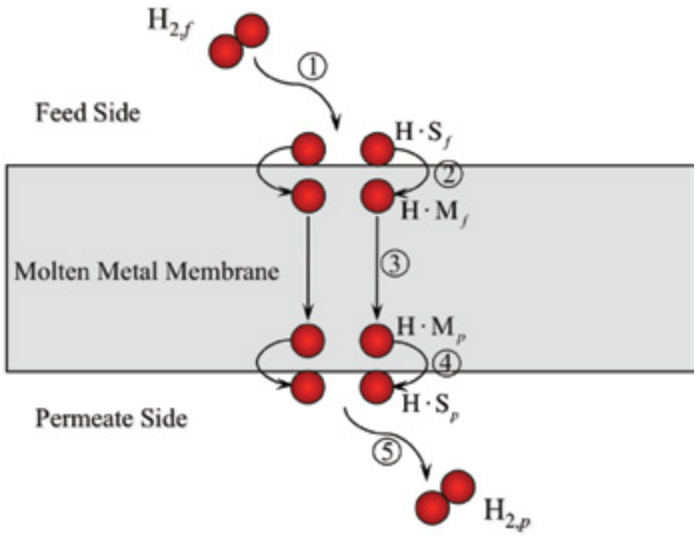

Figure 1: Schematic of Hydrogen Permeation Through SMMM Involving Sequential Steps of Surface Dissociative Adsorption, Subsurface Penetration, Bulk Metal Diffusion, Egress to Surface, and Reassociation of H Atoms

Since it is not clear at this time which of these steps may be rate-limiting for hydrogen permeation in SMMM, a comprehensive model of permeation in dense metal membranes has been developed. The key parameters that determine the permeance are solubility and diffusivity. These are expected to be higher in a liquid metal than the corresponding values in a solid crystalline metal due to the disordered liquid structure (Figure 2). A step increase in solubility of hydrogen is observed typically in a metal at its melting point. The hydrogen dissociation activity of these metals (step 1, Figure 1) is expected to be smaller than Pd, resulting in lower hydrogen solubility.

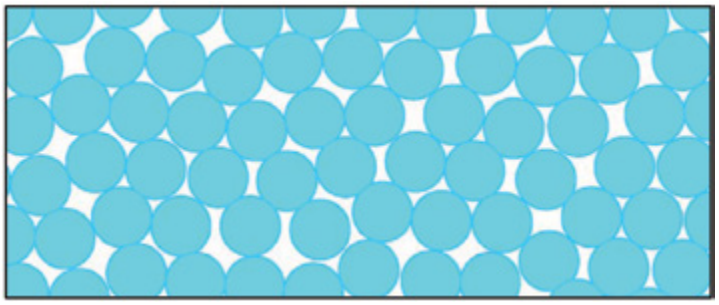

Figure 2: Schematic of Molten Metal Structure

The hydrogen diffusion coefficient is expected to be higher, as shown in Figure 3. Consequently, the overall permeance is expected to be on the same order as Pd. This has been confirmed experimentally, as shown in Figure 4. Under these conditions, the He flux was too small to be measureable.

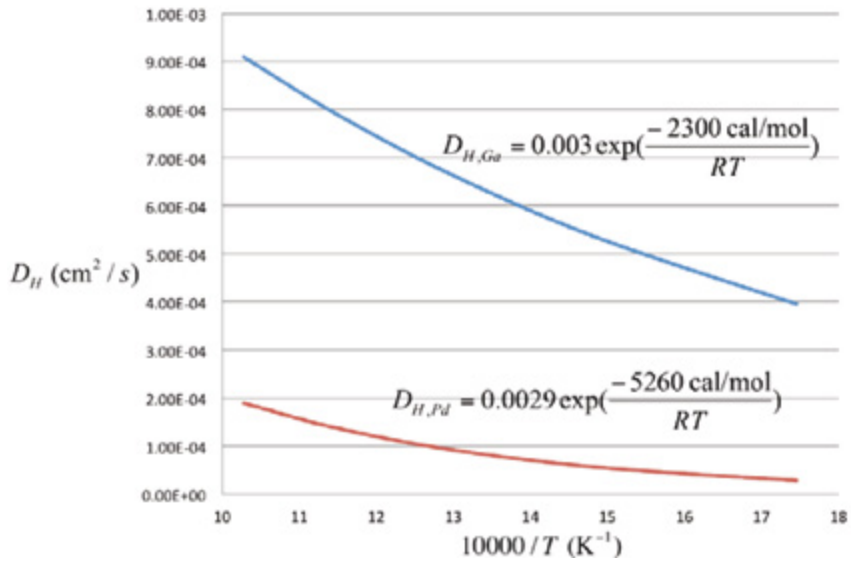

Figure 3: Comparison of H Diffusion Coefficient in Pd and in Liquid Gas

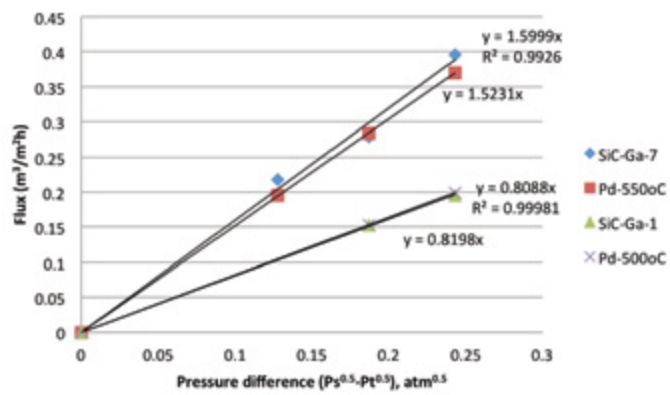

Figure 4: Comparison of Hydrogen Flux from Two SMMM with that from Pd Membrane of Same Thickness

technology advantages

- The SMMM comprises non precious-group metal membranes, which has a substantial cost advantage.
- The range of operating temperatures is potentially wider than conventional Pd-based membranes.
- The permeance is of an order similar to that of Pd.
- Thermal mismatch issues between metal and support, metal sintering, and hydrogen embrittlement issues are absent.
- It potentially has better tolerance to sulfur and to other synthesis gas (syngas) components.

R&D challenges

- The SMMM is an entirely novel idea so that there is an absence of prior work in the literature, thereby resulting in a lack of guidance in the selection of metal/support and fabrication procedures.
- Molten metals are highly reactive and infiltrate a porous metal support at elevated temperatures, rendering them unsuitable, even if pre-oxidized.

- Most ceramics are too reactive or too inert for good wetting or too fragile to allow compressive sealing at higher temperatures.
- The wetting characteristics of the molten metal change with the gas environment and with temperature.

results to date/accomplishments

- It was found that wettability and chemical inertness are competing requirements. Ceramic supports (e.g., zirconia) possess good inertness but poor wettability; naked metal supports (e.g., PSS), while readily wetted, react with molten metals at elevated temperatures to form impermeable solid alloys and intermetallic compounds.
- Coupon studies indicated that PSS oxidized at the usual temperature (700ºC) that works for Pd membranes and does not provide an effective diffusion barrier that holds up to the liquid metals tested (In, Ga, Sn).
- Promising ceramic support candidates have been identified and include SiC, ZrO_2, and TiO_2, while others have been identified as unsuitable.
- SiC has been found to be the best ceramic candidate that possesses excellent strength, complete inertness, and adequate wettability to provide dense molten metal membranes.
- These SiC-supported SMM membranes are stable (≈250 hours) under a hydrogen atmosphere, but when an inert atmosphere is introduced to check ideal selectivity, the wettability declines because of an increase in surface tension. The membrane was also found to thin after extended periods, possibly because of volatile hydride formation.
- It has been established that dense SMMM has a high selectivity and high permeance that is of the order of that of Pd membranes.
- A thermodynamic analysis has been performed to theoretically evaluate suitability of different ceramic supports for wettability and reactivity.
- A five-step comprehensive microkinetic model has been developed for permeation of hydrogen in dense metal membranes, which is suitable for adoption to SMMM when the necessary parameters become available.

next steps

- Fabricate a stable SMMM on SiC support and demonstrate its stability for ≥250 hours under a hydrogen atmosphere to definitively establish the SMMM permeance as a function of temperature, and compare to Pd. A challenge to be overcome includes the stability of the glass sealant.
- Investigate a sandwich configuration with a molten metal film between two SiC discs to develop a stable membrane. In the absence of a free liquid-gas interface, the effect of gas-composition on surface tension and wettability would be avoided. Such a configuration would also be suitable for a plate-and-frame module designs.
- The theoretical model of hydrogen permeance developed will be adapted to SMMM and the necessary parameters will be determined theoretically and experimentally.

available reports/technical papers/presentations

Deveau, N. D.; Ma, Y. H.; and Datta, R., "Beyond Sieverts' Law: A Comprehensive Microkinetic Model of Hydrogen Permeation in Dense Metal Membranes," J. Memb. Sci., in press (2013).

Deveau, N. D.; Ma, Y. H.; and Datta, R., "Beyond Sieverts' Law: A Comprehensive Model of Permeation In Palladium Membranes," presented at the North American Membrane Society Meeting, New Orleans (2012).

PILOT-SCALE WATER-GAS SHIFT – MEMBRANE DEVICE FOR HYDROGEN FROM COAL

primary project goals

The primary project goal is to build and test several pilot-scale hydrogen-separation devices for use in a gasification product stream. The outcome of the project will be a demonstration of manufacturing practices, in addition to the delivery of the engineering for a hydrogen production system ready for testing at large scale.

technical goals

- Design a modular water-gas shift (WGS) membrane reactor at 2 lbs hydrogen/day.
- Adapt suitable composite anodized alumina/palladium (Pd) copper (Cu) membranes to fit the reactor design.
- Test the reactor under NETL protocol and coal-derived synthesis gas (syngas) conditions.

technical content

Composite ceramic and alloy membranes have physical and chemical characteristics that allow them to be assembled with standard structural steels in easily fabricated constructions. The test data for the composite membranes shows that they eliminate some of the problems seen with metallic foil membranes of Pd or vanadium. By joining the composite membranes to off-the-shelf stainless steel components, complex devices can be designed that remain cost-effective to fabricate. The membrane modules are then inserted into systems that operate similar to heat exchange reactors, the well-established manufacturing capability of an engineering team member. The inclusion of structural monolithic catalysts into the assembly combines a WGS step with the hydrogen-separation step to maximize hydrogen production from syngas. This project uses the developments that have been produced over the past five years and builds systems large enough to identify economic and technical issues with potential commercial units for hydrogen production.

technology maturity:

Pilot-Scale Using Actual Syngas

project focus:

Integrated WGS Membrane

participant:

University of Wyoming Research Corporation

project number:

FE0004992

NETL project manager:

Darryl Shockley
darryl.shockley@netl.doe.gov

principal investigator:

Tom Barton
University of Wyoming Research Corporation
tbarton@uwyo.edu

partners:

Chart Energy & Chemicals, Inc.
Synkera Technologies, Inc.

performance period:

9/24/10 – 6/30/13

TABLE 1: MEMBRANE PROCESS PARAMETERS

	Units	Current R&D Value	Target R&D Value
Materials Properties			
Materials of Fabrication for Selective Layer		Pd	PdAu
Materials of Fabrication for Support Layer		AAO	
Nominal Thickness of Selective Layer	µm	5	5
Membrane Geometry		planar	planar
Maximum Trans-Membrane Pressure	bar	20	40
Hours Tested Without Significant Degradation		1,000	1,000
Manufacturing Cost for Membrane Material	$/m^2	2,500	250
Membrane Performance			
Temperature	°C	400	400
H_2 Pressure Normalized Flux	GPU or equivalent	1.5 mmol/m^2/s/Pa$^{0.5}$	1.5 mmol/m^2/s/Pa$^{0.5}$
H_2/H_2O Selectivity	-	∞	∞
H_2/CO_2 Selectivity	-	∞	∞
H_2/H_2S Selectivity	-	∞	∞
Sulfur Tolerance	ppm	100	150
Type of Measurement	-	Mixed	Mixed
Proposed Module Design			
Flow Arrangement	-	Complex	
Packing Density	m^2/m^3	5	25
Shell-Side Fluid	-	Permeate	
Syngas Gas Flowrate	kg/hr	1.9	
CO_2 Recovery, Purity, and Pressure	% / % / bar	95%, 95%, 40 bar	
H_2 Recovery, Purity, and Pressure	% / % / bar	80%, 100%, 1 bar	
Pressure Drops Shell/Tube Side	bar	39	
Estimated Module Cost of Manufacturing and Installation	$ / kg/hr		

Definitions:

Membrane Geometry – Flat discs or sheets, hollow fibers, tubes, etc.

Pressure Normalized Flux – For materials that display a linear dependence of flux on partial pressure differential, this is equivalent to the membrane's permeance.

GPU – Gas Permeation Unit, which is equivalent to 10^{-6} cm^3 (1 atm, 0°C)/cm^2/s/cm Hg. For non-linear materials, the dimensional units reported should be based on flux measured in cm^3 (1 atm, 0°C)/cm^2/s with pressures measured in cm Hg. Note: 1 GPU = 3.3464×10^{-6} kg mol/m^2-s-kPa [SI units].

Type of Measurement – Either mixed or pure gas measurements; projected permeance and selectivities should be for mixture of gases found in pre-conditioned syngas.

Flow Arrangement – Typical gas-separation module designs include spiral-wound sheets, hollow-fiber bundles, shell-and-tube, and plate-and-frame, which result in either co-current, counter-current, cross-flow arrangements, or some complex combination of these.

Packing Density – Ratio of the active surface area of the membrane to the volume of the module.

Shell-Side Fluid – Either the permeate (H_2-rich) or retentate (syngas) stream.

Estimated Cost – Basis is kg/hr of CO_2 in CO_2-rich product gas; assuming targets are met.

Other Parameter Descriptions:

Description of Membrane Permeation Mechanism – The permeation of hydrogen is through dense Pd alloy plugs.

Contaminant Resistance – The Pd-gold (Au) alloy shows reasonable resistance to hydrogen sulfide (H_2S).

Syngas Pretreatment Requirements – Particulate removal and control of H_2S to below 100 parts per million (ppm) is advisable.

Proposed Module Design – The module is designed for coal-derived syngas at 600 pounds per square inch gauge (psig) and 400°C. Shifted gas will provide a higher sustained flux than raw syngas with high carbon monoxide concentration.

technology advantages

- The Pd alloy plugs in the membrane are discontinuous, which greatly reduces embrittlement issues.
- The natural aluminum rim to the composite membrane allows multiple joining technologies, such as brazing and laser welding.
- The volume around the membranes is suited for structural WGS catalyst, which improves hydrogen-separation performance.

R&D challenges

- Electrochemically depositing Pd-Cu alloys in the anodized alumina.
- Joining aluminum-rimmed membranes to stainless steel structure.
- Accounting for thermal expansion mismatch during heating and cooling.
- Hydrogen sulfide and other contaminants in coal-derived syngas.

results to date/accomplishments

- The 2 lb/day reactor has been completed.
- Deposition of a 60 percent Pd/40 percent Cu mixture into the anodic aluminum oxide substrate was successful, as was 60:40 Pd-Au.
- Laser welding was confirmed by testing to be the best joining technology for the aluminum-rimmed membranes.
- Donut-shaped membranes have been produced in the format suitable for the reactor design.

next steps

Completion of Phase II design.

available reports/technical papers/presentations

Barton, T., "Pilot Water Gas Shift – Membrane Device for Hydrogen from Coal," Presented at the 2011 DOE Annual Hydrogen Review Meeting in Washington, DC, May 2011.

EFFICIENT REGENERATION OF PHYSICAL AND CHEMICAL SOLVENTS FOR CO_2 CAPTURE

technology maturity:
Bench-Scale

project focus:
Composite Polymer Membrane

participant:
University of North Dakota

project number:
FE0002196

NETL project manager:
Elaine Everitt
elaine.everitt@netl.doe.gov

principal investigator:
Brian Tande
University of North Dakota
briantande@mail.und.edu

partners:
None

performance period:
12/1/09 – 5/31/13

primary project goals

The University of North Dakota is evaluating the use of composite polymer membranes and porous membrane contactors for the recovery of carbon dioxide (CO_2) from CO_2-rich solvent streams from flue gas and coal gasification synthesis gas (syngas). The development of materials and processes is necessary to reduce the capital and operating costs of the solvent regeneration process, particularly the energy expended in regeneration.

technical goals

- Assess the capability of a range of composite polymer membranes and porous membrane contactors to regenerate physical and chemical solvents for CO_2 capture.
- Fabricate a continuous bench-scale test system to measure membrane performance and the effect of several key process parameters: gas flow rate, liquid flow rate, temperature, etc.

technical content

This project will investigate the use of two membrane technologies for the recovery of CO_2 from solvents: porous membrane contactors and composite membranes (Figure 1). In both cases, a liquid solvent, saturated with CO_2, will flow over the membrane, while either a vacuum or sweep gas will be used to maintain a low partial pressure of CO_2 on the permeate side of the membrane. Porous membranes will rely on surface tension of the solvent to prevent bulk flow of solvent through its pores. Composite membranes will utilize a thin (<50 micron) selective layer to prevent loss of solvent.

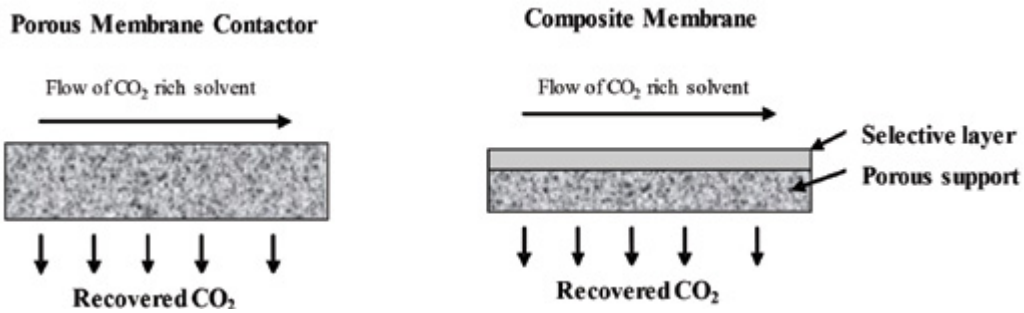

Figure 1: Two Types of Membranes Investigated in this Project

An experimental system has been built to evaluate membrane materials for this application (Figure 2). This system contains an absorber to saturate the solvent at a specified temperature, a pump to circulate the solvent, a heater to heat the solvent to a specified temperature, and a membrane unit. The permeate is analyzed using a gas chromatograph, while samples can be taken from the absorber and after the membrane unit in order to measure the rate of CO_2 recovery.

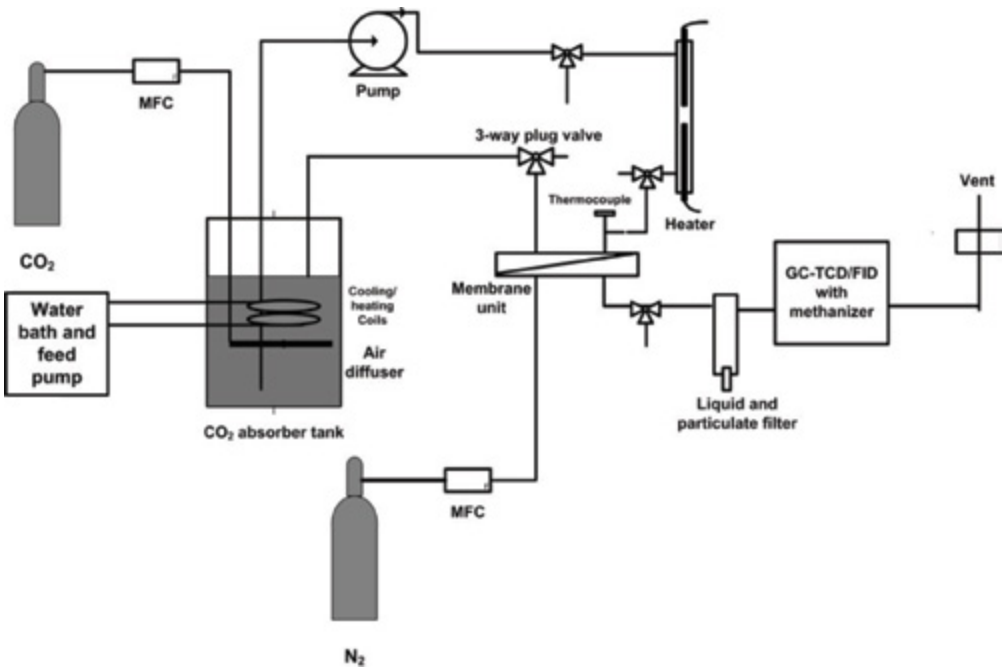

Figure 2: Experimental Apparatus

technology advantages

- More mass transfer area per volume than traditional packed or trayed columns.
- Lower operating temperatures than current technology, reducing energy costs, and minimizing amine degradation.
- Potentially wider operating ranges than packed or trayed columns.

R&D challenges

- Identification of materials with the necessary set of properties.
- Accurate control of temperature and flow rates.
- Measurement of low permeability materials. The gas chromatograph has been calibrated to 100 parts per million (ppm), but a flame ionization detector (FID) with a methanizer may be needed to quantify lower levels of CO_2 in the carrier gas.

results to date/accomplishments

- Porous and composite membrane experiments completed.
- Significantly improved CO_2 recovery after changing the orientation of the membrane module.
- Recent progress on this project includes the fabrication and commissioning of the test system, as well as the calibration of the gas chromatograph, which is being used to analyze the CO_2 content of the carrier gas so that the CO_2 permeation rate through each membrane material can be determined. Existing methods of determining CO_2 loading of the solvent have also been implemented.
- Porous membrane testing indicates that polytetrafluoroethylene (PTFE) is an acceptable membrane material, with minimal fouling and degradation over the course of the experiments.
- Varying sweep gas rate showed no clear trend on the regeneration performance and did not significantly influence the regeneration.
- The solution leaving the heater and entering the membrane unit was found to be two-phase, consisting of liquid solvent and evolved CO_2. However, the recovery of the CO_2 was limited by liquid phase mass transfer resistance on the membrane surface.

- Higher pressure decreased the recovery of CO_2, in general. To understand this result, a better understanding of the phase behavior of the feed is needed.
- Higher feed flow rate significantly decreased CO_2 recovery, presumably due to a reduced residence time in the membrane module.
- Membranes with larger pore sizes were found to have a higher flux of CO_2, but also allowed more liquid to pass through. Considering this tradeoff, membranes with pore sizes in the middle of the range studied were found to have excellent selectivity. In general, membranes with pore sizes smaller than 1.2 µm were sufficiently hydrophobic to limit wetting and fouling during the experimental runs.

next steps

- Complete parametric study for top membrane candidates for physical solvents.
- Studies using membrane modules with greater surface area.

available reports/technical papers/presentations

N/A.

PRESSURE SWING ABSORPTION DEVICE AND PROCESS FOR SEPARATING CO_2 FROM SHIFTED SYNGAS AND ITS CAPTURE FOR SUBSEQUENT STORAGE

primary project goals

The New Jersey Institute of Technology (NJIT) is developing, via laboratory-scale experiments, a pressure swing absorption-based (PSAB) device using a non-dispersive, membrane-based gas-liquid contactor that produces hydrogen at high pressure for integrated gasification combined cycle (IGCC), as well as a carbon dioxide (CO_2) stream, between 1 to 5 atm, that contains at least 90 percent of the CO_2 from a feed gas at ≈200°C and 300 pounds per square inch gauge (psig).

technical goals

- Develop, via laboratory experiments, an advanced PSAB device and a cyclic process to produce helium (He) (a surrogate for hydrogen) at high pressure from low-temperature, post-shift reactor synthesis gas (syngas), as well as a CO_2 stream containing at least 90 percent of the CO_2 and suitable for sequestration.
- Provide data and analysis of the cyclic process and device to facilitate subsequent scale-up.
- Develop a detailed analysis for the process and device to allow economic evaluation for potential larger-scale use.

technical content

In the first phase of research, an experimental setup will be developed for studying the PSAB process. NJIT will work with Media & Process Technology Inc. and Applied Membrane Technologies (AMT) Inc. to develop ceramic tubule-based and Polytetrafluoroethylene (PTFE) hollow fiber-based absorption devices. The absorption device will be explored on a preliminary basis for performance of PSAB separation of a moist CO_2-He gas mixture at 150 to 200°C and 200 to 300 psig, simulating a low-temperature, post-shift reactor syngas stream.

technology maturity:

Laboratory-Scale Using Simulated Syngas

project focus:

Pressure Swing Absorption Device and Process

participant:

New Jersey Institute of Technology

project number:

FE0001323

NETL project manager:

Steven Markovich
markovis@netl.doe.gov

principal investigator:

Dr. Kamalesh Sirkar
New Jersey Institute of Technology
sirkar@njit.edu

partners:

Applied Membrane Technologies
Media and Process Technology
Techverse

performance period:

10/1/09 – 3/31/13

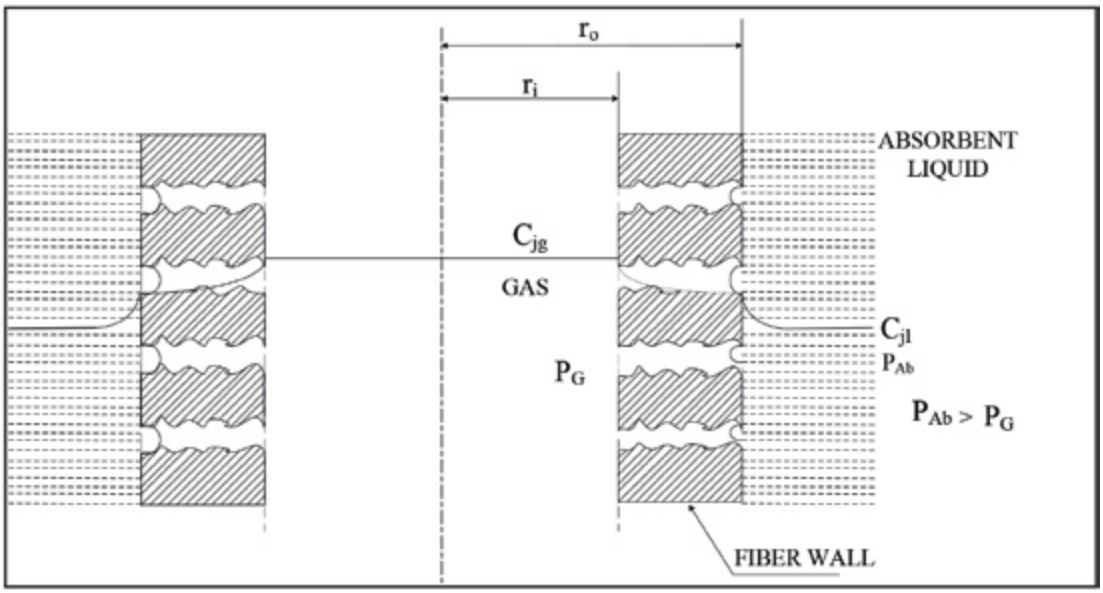

Figure 1: Concentration Profile of Absorbed Species in Gas and Liquid Phases

In Phase II, NJIT will explore, in detail, the purification and separation performance of the PSAB process for selected absorbents vis-à-vis purification of the feed gas stream to obtain a high-pressure, purified He stream and a low-pressure, purified CO_2 stream. Experimental setups will be developed to measure the solubility and diffusion coefficients of CO_2 and He at the appropriate ranges of temperature and pressure for selected absorbents. Researchers will develop a mathematical model of the PSAB device and process.

In Phase III, NJIT will generate experimental data on the solubility and diffusion coefficient for CO_2 and He for the selected absorbents. This will allow comparison of the results of simulation of the mathematical model with the observed purification and separation in the PSAB process and device for selected absorbents. Simulations of the model will be performed to explore scaleup of the process and facilitate process evaluation. The extent of loss/deterioration of the absorbents over extended periods of operation will be determined.

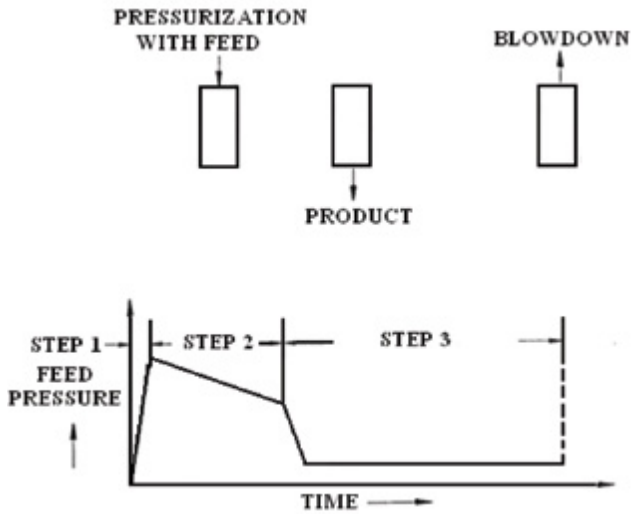

Figure 2: Pressure vs. Time Profile in Bore of Tubule or Hollow Fiber

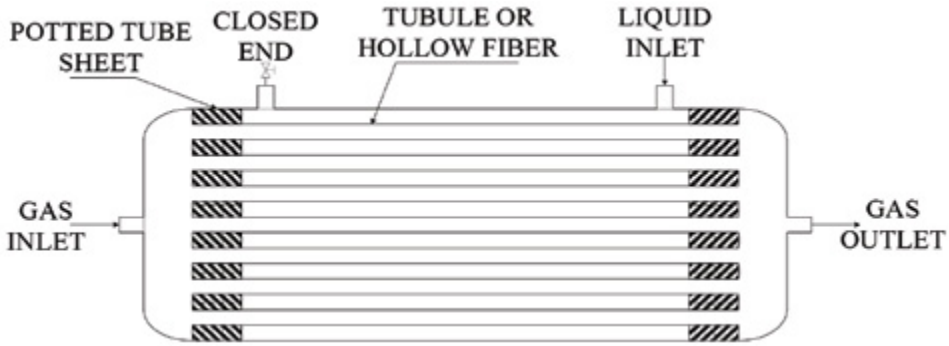

Figure 3: Schematic of Absorber Containing Ceramic Tubules or Hollow Fibers

TABLE 1: LIQUID SORBENT BED PARAMETERS

	Units	Current R&D Value	Target R&D Value
Pure Sorbent			
Molecular Weight	mol^{-1}	205.26	
Normal Boiling Point	°C	N/A	
Normal Freezing Point	°C	-6	
Vapor Pressure @ 15°C	bar	N/A	
Manufacturing Cost for Sorbent	$/kg		
Working Solution			
Concentration 20% PAMAM dendrimer Gen 0 in [bmim] [DCA]	kg/kg	0.25 (dendrimer/[bmim][DCA])	
Specific Gravity (15°C/15°C)	g/cm^3	1.08 at room temp.; 1.06 at 65°C 1.092 (20wt% dendrimer-[bmim][DCA] mixture) at room temperature	
Specific Heat Capacity @ STP	kJ/kg-K		
Viscosity @ STP	cP	106.7 at room temp	
Absorption			
Pressure	bar	13.8	13 – 20
Temperature	°C	100 – 125	150 – 200
Equilibrium CO_2 Loading	mol/mol	0.11	
Heat of Absorption	kJ/mol CO_2		
Solution Viscosity	cP	25.44 at 65°C	
Desorption			
Pressure	bar	1.4	1.0
Temperature	°C	100 – 125	150 – 200
Equilibrium CO_2 Loading	mol/mol	0.016	
Heat of Desorption	kJ/mol CO_2		
Proposed Module Design		*(for equipment developers)*	
Syngas Gas Flowrate	kg/hr		
H_2 Recovery, Purity, and Pressure	% / % / bar		
Pressure Drops Shell/Tube Side	bar		
Estimated Module Cost of Manufacturing and Installation	$\frac{\$}{kg/hr}$		

TABLE 2: MEMBRANE-CONTACTOR PARAMETERS

	Units	Current R&D Value	Target R&D Value
Materials Properties			
Materials of Fabrication for Selective Layer		Fluoropolymer	
Materials of Fabrication for Support Layer		Ceramic, Teflon, PEEK	
Nominal Thickness of Selective Layer	µm		
Membrane Geometry		Hollow Fiber, Shell & Tube	
Maximum Trans-Membrane Pressure	bar		
Hours Tested Without Significant Degradation		100	1,000
Manufacturing Cost for Membrane Material	$/m²	100	
Type of Measurement			

TABLE 2: MEMBRANE-CONTACTOR PARAMETERS

	Units	Current R&D Value	Target R&D Value
Proposed Module Design			
Flow Arrangement	-		
Packing Density	m^2/m^3		Ceramic: 900 Teflon: 2000 PEEK: 5000
Shell-Side Fluid	-		
Syngas Gas Flowrate	kg/hr		
CO_2 Recovery, Purity, and Pressure	% / % / bar	NA/85≈90/0.2≈1.0	90/95/1.0
H_2 Recovery, Purity, and Pressure	% / % / bar	NA/93≈95/5.0≈6.0	95/98/6.0-10.0
Pressure Drops Shell/Tube Side	bar	N/A	N/A
Estimated Module Cost of Manufacturing and Installation	$\frac{\$}{kg/hr}$		

Definitions:

Membrane Geometry – Flat discs or sheets, hollow fibers, tubes, etc.

Pressure Normalized Flux – For materials that display a linear dependence of flux on partial pressure differential, this is equivalent to the membrane's permeance.

GPU – Gas Permeation Unit, which is equivalent to 10^{-6} cm^3 (1 atm, 0°C)/cm^2/s/cm Hg. For non-linear materials, the dimensional units reported should be based on flux measured in cm^3 (1 atm, 0°C)/cm^2/s with pressures measured in cm Hg. Note: 1 GPU = 3.3464×10^{-6} kg mol/m^2-s-kPa [SI units].

Type of Measurement – Either mixed or pure gas measurements; projected permeance and selectivities should be for mixture of gases found in pre-conditioned syngas.

Flow Arrangement – Typical gas-separation module designs include spiral-wound sheets, hollow-fiber bundles, shell-and-tube, and plate-and-frame, which result in either co-current, counter-current, cross-flow arrangements, or some complex combination of these.

Packing Density – Ratio of the active surface area of the membrane to the volume of the module.

Shell-Side Fluid – Either the permeate (H_2-rich) or retentate (syngas) stream.

Estimated Cost – Basis is kg/hr of CO_2 in CO_2-rich product gas; assuming targets are met.

Other Parameter Descriptions:

Contaminant Resistance – Hydrogen Sulfide (H_2S) will not affect the ceramic substrate, nor will it affect the fluoropolymer coating on ceramic and PEEK materials; the Teflon hollow fibers will remain unaffected also. PEEK material is also unlikely to be affected.

Syngas Pretreatment Requirements – Syngas may need to be cooled to 100 to 125°C, unless the next round of membrane modules can withstand higher temperature on a continuous basis.

Membrane Replacement Requirements – Device has not been run long enough continuously to define the replacement time. Device will need to run for at least 1,000 to 3,000 hours.

Waste Streams Generated – Degraded absorption solvent.

Proposed Module Design – Hollow-fiber porous membrane modules.

technology advantages

- High solubility selectivity of novel selected liquid absorbents, high purification ability of the PSA process, and high gas-liquid contacting surface area per unit device volume.
- Compact, membrane-like device.
- Will deliver highly purified hydrogen (H_2) at nearly its partial pressure and temperature in the post-shifted reactor syngas feed.
- Purified CO_2 stream (>90 percent CO_2) will be available at 1 to 5 atm.

R&D challenges

- Continuous production of both a higher-purity He stream and a highly purified CO_2 stream requires more modules and altered module configurations. The PEEK hollow-fiber module design has to be changed to achieve higher purification.
- Absorbent leaks through microporous PTFE hollow fibers that have a plasma polymerized microporous fluorosilicone coating. These fibers did not develop a high-enough pressure capability and need further development.

results to date/accomplishments

- Successful testing of PEEK membrane in lab at 250 psig and 100°C with He/CO_2 stream.
- Successful testing of ceramic membrane modules in lab at 300 psig without any leakage; extended operation at 120°C.

next steps

- Scale-up of process and device; improved hollow-fiber module design already developed has to be implemented.
- Absorbent liquid characterized and degradation determined.

available reports/technical papers/presentations

Xingming, J.; Chau, J.; Obuskovic, G.; and Sirkar, K.K.,“ Preliminary studies of CO_2 removal from pre-combustion syngas through pressure swing membrane absorption process with ionic liquid as absorbent,” March 2013, Industrial & Engineering Chemistry Research (I&EC Research).

Sirkar, K.K., “Pressure Swing Absorption Device and Process for Separating CO_2 from Shifted Syngas and its Capture for Subsequent Storage,” presented at 2012 NETL CO_2 Capture Technology Meeting, July 2012.

Chau, J.; Xingming, J.; Obuskovic, G.; and Sirkar, K.K., “Pressure Swing Absorption Device and Process for Separating CO_2 from Shifted Syngas and its Capture for Subsequent Storage,” presented at 2011 NETL CO_2 Capture Technology Meeting, August 2011.

AMORPHOUS ALLOY MEMBRANES PREPARED BY MELT-SPIN METHODS FOR LONG-TERM USE IN HYDROGEN SEPARATION APPLICATIONS

primary project goals

The University of Nevada set out to produce amorphous membranes from non-precious metal alloys for hydrogen separation. These amorphous membranes were expected to work towards meeting all 2015 separation targets, such as flux (300 $ft^3/hr/ft^2$), temperature (200-500°C), sulfur tolerance (>100 parts per million by volume [ppmv]), and cost (<$100/$ft^2$). The project consisted of developing multiple metal-alloy ribbon membranes for evaluation and down-selection.

technical goals

- Screening of amorphous alloys and selection of potential alloys, which have comparable performance to palladium (Pd) membranes in terms of hydrogen flux, thermal stability, etc., but at a much lower cost.
- Determine hydrogen solubility, diffusivity, permeability, and recrystallization temperatures.

technical content

Non-precious metal membranes have been fabricated from amorphous alloys, such as nickel, niobium, and zirconium, to replace Pd membranes under moderate operating conditions. However, it was found that the amorphous membranes needed a thin catalytic surface coating of Pd in the nanometer range for the dissociation of hydrogen (H_2) molecules to $2H^+$.

technology maturity:

Bench-Scale

project focus:

Amorphous Alloy Membranes for H_2 Separation

participant:

University of Nevada, Reno
Department of Chemical and Materials Engineering

project number:

FE0000998

NETL project manager:

Richard Dunst
richard.dunst@netl.doe.gov

principal investigator:

Dhanesh Chandra
University of Nevada, Reno
dchandra@unr.edu

partners:

CSIRO, Division of Energy Technology, Kenmore, Australia
TDA Research Inc., Wheat Ridge, Colorado, USA
University of Vermont, VT

performance period:

9/22/09 – 2/28/13

TABLE 1: MEMBRANE PROCESS PARAMETERS

	Units	Current R&D Value	Target R&D Value
Materials Properties			
Materials of Fabrication for Selective Layer		500 nm Pd	Ni-Nb-Zr Ni-Nb-Zr-Ta
Materials of Fabrication for Support Layer		N/A	
Nominal Thickness of Selective Layer	µm	40-80	10
Membrane Geometry		Planar ribbons	Tubular
Maximum Trans-Membrane Pressure	bar	8	55
Hours Tested Without Significant Degradation		100	43,800
Manufacturing Cost for Membrane Material	$/m^2	$5	<$1076
Membrane Performance			
Temperature	°C	350-450	250-500
H_2 Pressure Normalized Flux	GPU or equivalent	1.9×10-4 mol m^{-2} s^{-1} Pa$^{-0.5}$	3.5×10-3 mol m^{-2} s^{-1} Pa$^{-0.5}$
H_2/H_2O Selectivity	-	>99.995%	99.99%
H_2/CO_2 Selectivity	-	>99.995%	99.99%
H_2/H_2S Selectivity	-	-	99.99%
Sulfur Tolerance	ppm	0	>100
Type of Measurement	-	Mixed	Mixed
Proposed Module Design			
Flow Arrangement	-	Plate-and-frame counter-current	
Packing Density	m^2/m^3	150	
Shell-Side Fluid	-	Steam sweep	
Syngas Gas Flowrate	kg/hr	0.1	
CO_2 Recovery, Purity, and Pressure	% / % / bar	90%, 90%, 8 bar	
H_2 Recovery, Purity, and Pressure	% / % / bar	90%, 99.995%, 1 bar	
Pressure Drops Shell/Tube Side	bar	7 bar	
Estimated Module Cost of Manufacturing and Installation	$ / kg/hr		

Definitions:

Membrane Geometry – Flat discs or sheets, hollow fibers, tubes, etc.

Pressure Normalized Flux – For materials that display a linear dependence of flux on partial pressure differential, this is equivalent to the membrane's permeance.

GPU – Gas Permeation Unit, which is equivalent to 10^{-6} cm^3 (1 atm, 0°C)/cm^2/s/cmHg. For non-linear materials, the dimensional units reported should be based on flux measured in cm^3 (1 atm, 0°C)/cm^2/s with pressures measured in cmHg. Note: 1 GPU = 3.3464×10^{-6} kg mol/m^2-s-kPa [SI units].

Type of Measurement – Either mixed or pure gas measurements; projected permeance and selectivities should be for mixture of gases found in pre-conditioned syngas.

Flow Arrangement – Typical gas-separation module designs include spiral-wound sheets, hollow-fiber bundles, shell-and-tube, and plate-and-frame, which result in either co-current, counter-current, cross-flow arrangements, or some complex combination of these.

Packing Density – Ratio of the active surface area of the membrane to the volume of the module.

Shell-Side Fluid – Either the permeate (H_2-rich) or retentate (syngas) stream.

Estimated Cost – Basis is kg/hr of CO_2 in CO_2-rich product gas; assuming targets are met.

Several permeations tests were performed, in addition to in-situ X-ray diffraction and recrystallization kinetic experiments. Permeation tests are complete in a temperature range of 400 to 450°C on the following amorphous alloy membranes ribbons, which were fabricated by melt spinning and then coated with a thin (500 nm) layer of Pd surface catalyst by magnetron sputtering: $(Ni_{0.6}Nb_{0.4})_{90}Zr_{10}$, (2) $(Ni_{0.6}Nb_{0.4})_{80}Zr_{20}$, (3) $(Ni_{0.6}Nb_{0.4})_{70}Zr_{30}$, (4) $(Ni_{0.6}Nb_{0.3}Ta_{0.1})_{90}Zr_{10}$, (5) $(Ni_{0.6}Nb_{0.3}Ta_{0.1})_{80}Zr_{20}$, (6) $(Ni_{0.6}Nb_{0.3}Ta_{0.1})_{70}Zr_{30}$, (7) $Ni_{60}Nb30Ta10$, and (8) $Ni_{32}Nb_{28}Co_{10}Zr_{30}$. A hydrogen permeability of 1.4×10^{-8} mol.m^{-1} s^{-1} Pa$^{-0.5}$ was reported for the alloy $(Ni_{0.6}Nb_{0.4})_{70}Zr_{30}$, which is equivalent to pure Pd. For long-term use of membranes in hydrogen separation, the amorphous alloy $(Ni_{0.6}Nb_{0.4})_{80}Zr_{20}$ with the 20 percent Zr content alloy appears to be the best so far due to this membrane having a high-hydrogen permeability and relatively good thermal stability (Table 2 and Figure 1).

TABLE 2: PROPERTIES OF MELT-SPUN AMORPHOUS Ni-Nb-Zr AND Pd/Pd-Ag ALLOY MEMBRANES

Property	Pd	Pd77Ag23	$Ni42Nb_{28}Zr_{30}$
Permeability @300°C (mol m^{-1} s^{-1} Pa$^{-0.5}$)	0.8×10^{-8}	1.6×10^{-8}	0.6×10^{-8}
Thickness (µm)	30	30	30
Feed Pressure (bar)	7.8	7.8	7.8
Permeate Pressure (bar)	1.0	1.0	1.0
Flux (mol m^{-2}s^{-1})	0.15	0.30	0.12
Membrane Area Per Module (m^2)	0.38	0.38	0.38
Flux (mol s^{-1})	0.057	0.114	0.046
Materials Cost ($/m^2)	7500	5700	1
Membrane Cost ($/m^2)*	9000*	6840*	300**

*20 percent of materials cost.
**Includes melt spinning, plus 200nm Pd on each surface.

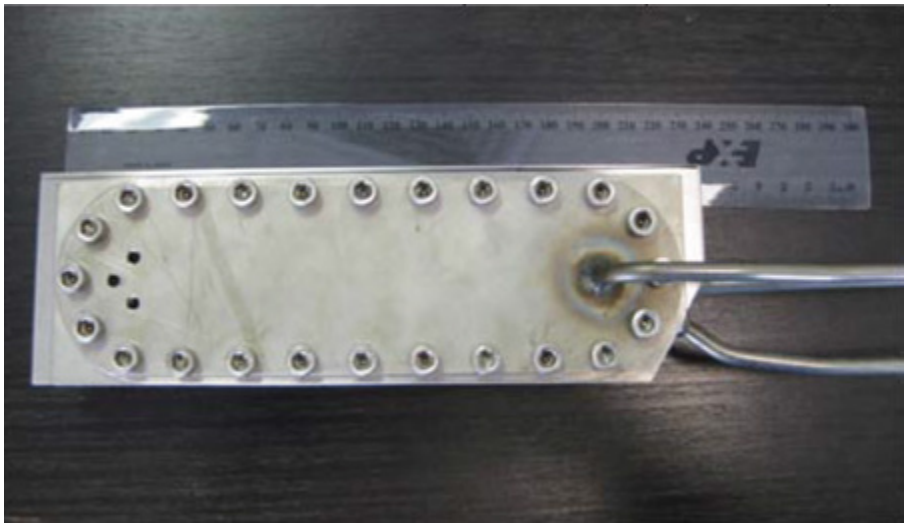

Figure 1: Prototype Dual-Sided Membrane for Hydrogen Permeation

Based on the data obtained by the collaborator, TDA Research in Colorado, the flux-per-module is reported as 0.046 mol s^{-1} for the $(Ni_{0.6}Nb_{0.4})_{70}Zr_{30}$ alloy; the flux/reactor is 69 mol.s^{-1}, which is equivalent to 5,961,600 mol day^{-1} (11,932 kg day^{-1}); and the number of reactors required to produce 300 tonnes per day (tpd) is 25, as shown in Table 3.

TABLE 3: MORE DETAILS ON 300-TPD HYDROGEN PERMEATION PLANT

Property	Pd	Pd77Ag23	$Ni42Nb_{28}Zr_{30}$
Membrane Area Per Module (m^2)	0.38	0.38	0.38
Flux Per Module (mol s^{-1})	0.057	0.114	0.046
Modules Per Reactor	1500	1500	1500
Membrane Area Per Reactor (m^2)	285	285	285
Flux Per Reactor (mol s^{-1})	86	171	69
Flux Per Reactor (mol day^{-1})	7,430,400	14,774,400	5,961,600
Flux Per Reactor (kg day^{-1})	14,861	29,585	11,932
Reactors for 300 tpd	20.2	10.1	25.1

The total estimated cost for a 300-tpd system that uses amorphous alloy membranes is found to be approximately one-fifth of the cost of a similar Pd membrane system (Table 4).

TABLE 4: PROJECTED COSTS OF THE 300-TPD PLANT

Cost of Various Components	Pd	Pd77Ag23	$Ni42Nb_{28}Zr_{30}$
Membrane Costs ($M)	51.8	19.7	2.1
Module Costs ($M)	7.6	3.8	9.4
Reactor Cost ($M)	0.8	0.4	1.0
Total Costs ($M)	60.2	23.9	12.5
$/kg H_2	201	80	41
Cost Relative to $Ni42Nb_{28}Zr_{30}$ (%)	490	195	100

One National Energy Technology Laboratory (NETL) protocol experiment has been conducted at TDA laboratories with the following simulated coal synthesis gas (syngas) mixture under NETL protocol Test No.1: (50 percent H_2, 19 percent H_2O, 1 percent CO_2, and 1 percent carbon monoxide [CO] at 100 pounds per square inch [psi]). Further tests are currently underway at TDA Research. For optimal results, it is proposed that the most permeable materials are tested at ≈375°C. Table 5 provides a summary for the various alloys.

TABLE 5: HYDROGEN PERMEABILITIES OF NI-BASED AMORPHOUS ALLOY MEMBRANES

Membrane Composition (at%)	Thickness (mm)	Temperature (°C)	Hydrogen Permeability (mol m^{-1} s^{-1} $Pa^{-0.5}$)	Relative Thermal Stability
$Ni_{60}Nb20Zr_{20}$	0.049	400	1.6×10^{-9}	good
$(Ni_{0.6}Nb_{0.4})_{70}Zr_{30}$	0.054	450	1.4×10^{-8}	low
$(Ni_{0.6}Nb_{0.4})_{80}Zr_{20}$	0.063	400	8.3×10^{-9}	good
$(Ni_{0.6}Nb_{0.4})_{90}Zr_{10}$	0.088	400	1.5×10^{-9}	high
$(Ni_{0.6}Nb_{0.3}Ta_{0.1})_{70}Zr_{30}$	0.065	400	9.8×10^{-9}	low
$(Ni_{0.6}Nb_{0.3}Ta_{0.1})_{80}Zr_{20}$	0.055	400	-	good
$(Ni_{0.6}Nb_{0.3}Ta_{0.1})_{90}Zr_{10}$	0.086	400	1.3×10^{-9}	high
$Ni_{60}Nb30Ta10$	0.049	400	2.6×10-10	high
$Ni_{32}Nb_{28}Co_{10}Zr_{30}$	-	450	1.2×10^{-8}	-

Hydrogen solubility tests in a temperature range of 200 to 400°C and Gibbs energies of reactions were obtained for the following: (1) $(Ni_{0.6}Nb_{0.4})_{90}Zr_{10}$, (2) $(Ni_{0.6}Nb_{0.4})_{80}Zr_{20}$, (3) $(Ni_{0.6}Nb_{0.4})_{70}Zr_{30}$, (4) $(Ni_{0.6}Nb_{0.3}Ta_{0.1})_{70}Zr_{30}$, (5) $(Ni_{0.6}Nb_{0.3}Ta_{0.1})_{80}Zr_{20}$, (6) $(Ni_{0.6}Nb_{0.3}Ta_{0.1})_{90}Zr_{10}$, (7) $(Ni_{0.42}Nb0.28Zr0.30)_{98}B_2$, and (8) $(Ni_{0.42}Nb0.28Zr0.30)_{95}B_5$. Results are summarized in Table 6.

TABLE 6: HYDROGEN SOLUBILITY DATA OF ALLOY MEMBRANES TESTED IN DOE PROGRAM

Membrane	Temp (°C)	Pressure (Bar)	H/M	Quality of Membrane	Thermal Stability	Crystallization Temp.
$(Ni_{0.6}Nb_{0.4})_{70}Zr_{30}$	400	12.1549	0.4277	Very good	Relatively low in a series of $(Ni_{0.6}Nb_{0.4})_{100-x}Zr_x$	812 K
	350	12.1112	0.5008			
	300	12.0210	0.5158			
	250	12.1915	0.6031			
	200	12.1497	0.6521			
$(Ni_{0.6}Nb_{0.4})_{80}Zr_{20}$	400	9.2633	0.2292	Good	Relatively good in a series of $(Ni_{0.6}Nb_{0.4})_{100-x}Zr_x$	864 K
	350	7.3726	0.3873			
	300	12.1615	0.3456			
	250	10.4865	0.3690			
	200	11.0128	0.4648			
$(Ni_{0.6}Nb_{0.4})_{90}Zr_{10}$	400	5.9269	0.1162	Fair	Relatively high in a series of $(Ni_{0.6}Nb_{0.4})_{100-x}Zr_x$	885 K
	350	10.7332	0.1097			
	300	4.8478	0.0872			
	250	2.5990	0.1075			
	200	11.4746	0.2012			
$(Ni_{0.6}Nb_{0.3}Ta_{0.1})_{70}Zr_{30}$	400	9.2426	0.4730	Very good	Relatively low in a series of $(Ni_{0.6}Nb_{0.3}Ta_{0.1})_{100-X}Zr_x$	810 K
	350	11.8530	0.5256			
	300	8.1164	0.5342			
	250	3.6524	0.5304			
	200	4.5815	0.6184			
$(Ni_{0.6}Nb_{0.3}Ta_{0.1})_{80}Zr_{20}$	400	7.7863	0.1562	Good	Relatively good in a series of $(Ni_{0.6}Nb_{0.3}Ta_{0.1})_{100-X}Zr_x$	873 K
	350	12.2666	0.1877			
	300	12.2592	0.1957			
	250	5.8144	0.1706			
	200	9.0966	0.2106			
$(Ni_{0.6}Nb_{0.3}Ta_{0.1})_{90}Zr_{10}$	400	11.7151	0.0498	Fair	Relatively high in a series of $(Ni_{0.6}Nb_{0.3}Ta_{0.1})_{100-X}Zr_x$	900 K
	350	12.2252	0.1239			
	300	4.1636	0.0371			
	250	5.0489	0.0355			
	200	8.5764	0.1361			
$(Ni_{0.42}Nb0.28Zr0.30)_{95}B_5$	400	3.9302	0.4729	Fair	Decreased with addition of boron in $(Ni_{0.6}Nb_{0.4})_{70}Zr_{30}$	801 K
	350	5.8158	0.4736			
	300	4.3730	0.4672			
	250	4.5142	0.5074			
	200	3.3871	0.5045			

The latest work shows that the thin Pd coating on the membranes may be avoided by hydrogen-heat treatment (prior to permeation tests). To test the hypothesis of hydrogen dissociation on the surface of the uncoated amorphous ribbons, an equimolar amount of hydrogen and deuterium may be reacted to form HD molecule. These H-D exchange experiments were performed at the Commonwealth Scientific and Industrial Research Organization (CSIRO). The micro-kinetic analysis of the H_2-D2 exchange reaction on these membranes will provide an insight towards this subject. Initial results from the H_2-D2 exchange reactions on $Ni_{64}Zr36$, $Ni_{60}Nb40$, $Ni_{60}Nb20\ Zr_{20}$, $Ni_{60}V40$, and $Ni_{60}V_{20}Zr_{20}$ membranes have already been conducted and more need to done.

Other Parameter Descriptions:

Membrane Permeation Mechanism – The performance of the membranes can be discussed in terms of flux and selectivity. The flux of hydrogen is the product of the diffusion coefficient and the concentration gradient through the membrane, and can be expressed as mass or mole per unit time, per unit area. The basic concept of a membrane permeation process is schematically depicted in Figure 1. The permeability coefficient (ø) is defined by the ratio between the hydrogen flux (J) of the membrane and its concentration gradient (Δc) through the membrane thickness (l):

$$J = \phi \frac{\Delta c}{l} \qquad (1.1)$$

Fick's first law describes the atomic permeation flux of hydrogen through a homogeneous metal phase as a function of the concentration gradients and a diffusion coefficient, DH_2 (cm^2/s), which is the concentration gradient resulting from ΔP across the membrane. Permeation of hydrogen through a metal membrane is a function of the solubility and diffusion of hydrogen in the membrane, in addition to the membrane thickness and temperature. When the downstream pressure is much less than the upstream pressure, permeability can be expressed by the product of the diffusion coefficient (D) and a solubility factor (S):

$$\phi = DS \qquad (1.2)$$

For alloy membranes, the solubility-pressure relationship is defined as the following Sieverts' law:

$$C = kP^n \qquad (1.3)$$

Typically n=0.5, k is Sievert's constant and P is the hydrogen partial pressure in the hydrogen-metal system. The permeation flux is proportional to the difference in the square roots of the pressure at the high-pressure surface (P1) and the low-pressure surface (P2). The flux divided by this pressure term is referred to as permeance (δ):

$$\delta = \frac{J}{(P_1^n - P_2^n)} \qquad (1.4)$$

For a given membrane, permeance will be constant regardless of the H_2 partial pressures at each surface, as J changes in proportion to . Permeance is applied as the primary performance characteristic for thin, surface-limited membranes.

As can be seen from Equation (1.1), flux is inversely proportional to the thickness (l) of a membrane. Factoring this in gives the permeability (ø):

$$\phi = \delta l = \frac{Jl}{(P_1^n - P_2^n)} \qquad (1.5)$$

Permeability is independent of thickness and H_2 partial pressure, and thus offers the best means of comparing the intrinsic transport properties of different bulk materials. This assumes that H transport is limited by bulk diffusion, not the association or dissociation reactions. Furthermore, permeability is temperature-dependent and can be represented by the Arrhenius equation:

$$\phi = K \exp\left(\frac{-E}{RT}\right) \qquad (1.6)$$

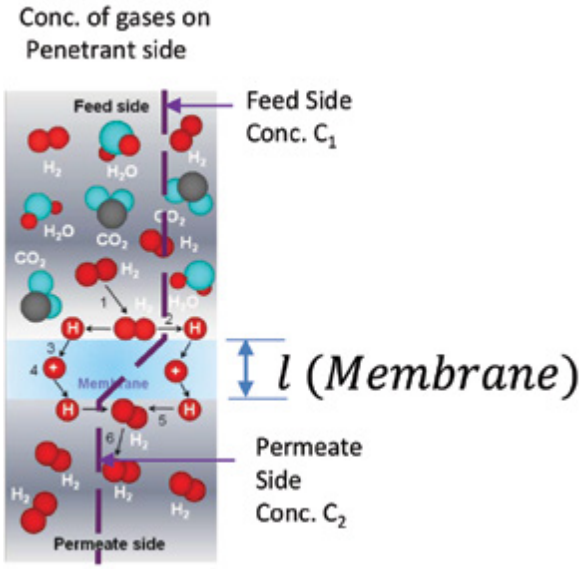

Figure 2: Hydrogen Permeation Mechanism Through a Membrane, According to Solution-Diffusion Model (Kim, S.-M., 2011)

Where K is the pre-exponential factor constant, E is the activation energy, R is the gas constant, and T is the absolute temperature. Similarly, the ability of a membrane to separate gases is characterized by the selectivity of the membrane [13]. Ideal selectivity (or separation factor) is defined as the ratio of the permeability of the penetrants of interest. The selectivity of hydrogen over mixed gas can be expressed as:

$$\alpha_{H2/mixed} = \frac{P_{H2}}{P_{mixed}} \qquad (1.7)$$

Where $\alpha_{H2/mixed}$ is the ideal selectivity of the hydrogen to the mixed gas.

Contaminant Resistance – Majority of the work was done with hydrogen in a quest to develop inexpensive membrane. There are some tests done with the collaborators to test the CO_2 contaminant.

technology advantages

- Drastic reduction in overall cost compared to conventional Pd-alloy membrane systems.
- Hydrogen permeabilities that are nearly equivalent to Pd.
- Tolerent to CO poisoning.
- High-volume, reliable, and inexpensive manufacturing process.
- Hydrogen pre-heat treatment allowed hydrogen solubility in the membranes without any Pd coatings (preliminary results).

R&D challenges

- Defects during fabrication of robust amorphous alloy membranes.
- Thermal cycling.
- Membrane stability/embrittlement.
- Loss of membrane structural integrity/performance.
- Wider operating temperature range.

results to date/accomplishments

Permeability

- Completed permeability testing of the $(Ni_{0.6}Nb_{0.4})_{100-x}Zr_x$ and $(Ni_{0.6}Nb_{0.3}Ta_{0.1})_{100-x}Zr_x$ (where x =0, 10, 20 or 30%) series of amorphous alloy membranes.
- The hydrogen permeability of the $(Ni_{0.6}Nb_{0.4})_{70}Zr_{30}$ amorphous alloy was 1.4×10^{-8} mol m^{-1} s^{-1} $Pa^{-0.5}$ at 450°C, which is equivalent to the permeability of pure Pd.
- The partial substitution of niobium (Nb) with tantalum (Ta) resulted in slightly lower hydrogen permeability. Alloys with ≤10 wt. percent zirconium (Zr) content had very low permeabilities; $<2\times10^{-9}$ mol m^{-1} s^{-1} $Pa^{-0.5}$.
- Thermal stability results showed a rapid decrease in hydrogen flux with time at 400 or 450°C for alloys containing higher Zr contents.
- The $(Ni_{0.6}Nb_{0.4})_{70}Zr_{30}$ alloy embrittled significantly, while $(Ni_{0.6}Nb_{0.3}Ta_{0.1})_{70}Zr_{30}$ clearly decreased the susceptibility to hydrogen embrittlement at 400°C.
- The addition of Ta provided a modest increase in the thermal stability of the amorphous Ni-Nb-Zr alloy with only a slight impact on its hydrogen permeability. Alloys containing little or no Zr displayed very stable, but low, hydrogen permeabilities during 100-hour tests.
- Fracture due to embrittlement decreased with increasing Zr content.

Solubility

- Recent results show that Pd coatings on Ni-Nb-Zr and other alloys can be eliminated if initial hydrogen heat treatment is performed on the ribbons, based on the hydrogen solubility experiments.
- Completed hydrogen solubility testing on the $(Ni_{0.6}Nb_{0.3}Ta_{0.1})_{100-x}Zr_x$ and $(Ni_{0.6}Nb_{0.4})_{100-x}Zr_x$ (where x = 0, 10, 20 or 30%) series of amorphous alloy membranes.
- Results showed that higher Zr content resulted in higher hydrogen solubility at all temperatures in the 200 to 400°C range.
- All of the membrane materials showed higher solubility at lower temperatures.
- For $(Ni_{0.6}Nb_{0.3}Ta_{0.1})_{90}Zr_{10}$, the Ta resulted in decreased solubility at all the temperatures.
- In all cases, Sieverts' Law was violated (positively), which is understood to be a general trend for amorphous alloys.
- A "hook effect" was observed for the case of membranes with lower Zr contents (x=10, 20), which are being analyzed and interpreted.

Crystalization Kinetics

- Determined the crystallization temperature and kinetics for a series of $(Ni_{0.6}Nb_{0.4})_{100-x}Zr_x$ and $(Ni_{0.6}Nb_{0.3}Ta_{0.1})_{100-x}Zr_x$ (where x = 0, 10, 20 or 30%) amorphous alloy membranes.
- The crystallization temperature increased with decreasing Zr content or increasing Ta content.
- The Johnson-Mehl-Avrami (JMA) equation was applied to an isothermal analysis of crystallization; the main crystallization process of the Ni-Nb-Zr alloy was governed by diffusion-controlled, three-dimensional growth.
- The activation energies for crystallization of the amorphous alloy membranes were determined by Kissinger and Ozawa analyses: (i) the activation energy of crystallization increases with decreasing Zr content, and (ii) the addition of Ta increase the activation energy of the amorphous Ni-Nb-Zr alloy.

next steps

This project ended on February 28, 2013.

available reports/technical papers/presentations

Kim, S.-M., et.al, "Phase Transformation and Crystallization Kinetics of Melt-Spun Ni60Nb20Zr20amorphous alloy," Journal of Non-Crystalline Solids, v358 (2012) 1165-1170.

Steve Paglieri, et.al, "Hydrogen Permeability, thermal stability and hydrogen embrittlement of Ni-Nb-Zr and Ni-Nb-Ta-Zr amorphous alloy membranes," Journal of Membrane Science, 378 (2011) 42-50.

Kim, S.-M., et.al, "Hydrogen Permeability and Crystallization Kinetics in Amorphous Ni-Nb-Zr Alloys," International Journal of Hydrogen Energy, (2011) v 37, (4) Feb. 2012, pp 3904-3913.

Paglieri, S. N., et.al, "Ni-Nb-Zr-(Ta, Co) Amorphous Alloy Membranes for Hydrogen Separation," presented at 242nd American Chemical Society National Meeting, Denver, Colorado, Aug. 28-Sept. 1, 2011.

Kim, S.-M., et.al, "Effect of tantalum substitution on the crystallization kinetics and hydrogen permeability of Ni-Nb-Zr amorphous alloys," presented at The Minerals, Metals, and Materials Society 2011 Annual Meeting, San Diego, California, USA, Feb 27-March 3, 2011.

Paglieri, S. N., et.al, "Ni-Nb-Zr-(Ta, Co) Amorphous Alloy Membranes for Hydrogen Separation," North American Membrane Society (NAMS) Meeting, June 2011, NAMS Annual Meeting, Las Vegas, Nevada, June 2011.

Paglieri, S. N., et.al, "Amorphous Membranes for Hydrogen Separation Based on Ni-Nb-Zr Alloys," presented at the American Institute Chemical Engineers (AIChE) Annual Meeting, Minneapolis, Minnesota, October 2011.

Paglieri, S. N., et.al, "Ni-Nb-Zr-(Ta, Co) Amorphous Alloy Membranes for Hydrogen Separation," presented at the 242nd American Chemical Society National Meeting, Denver, Colorado, Aug. 28-Sept. 1, 2011.

Pal, N. K., et.al, "Effect of Ta substitution on hydrogen solubility and permeability of Ni42Nb28Zr30amorphous alloy," North American Membrane Society Annual Meeting, Las Vegas, Nevada, USA, June 2011.

Kim, S.-M., et.al, Hydrogen permeability and crystallization kinetics in amorphous Ni-Nb-Zr alloys," presented at the International Conference on Renewable Energy (ICRE 2011), Jaipur, India, Jan. 2011.

S.-M. Kim, et.al, "Effect of hydrogen pressure on hydrogen permeability of Ni-based amorphous membranes," International Congress on Membranes and Membrane Processes (ICOM), Amsterdam, The Netherlands, July 2011.

Paglieri, S. N., et.al, "Ni-Nb-Zr-(Ta, Co) Amorphous Alloy Membranes for Hydrogen Separation," poster presented at NAMS Meeting, Las Vegas, Nevada, June 2011.

S.-M. Kim, et.al, "Crystallization Kinetics and Hydrogen Solubility in Ni-based Amorphous Alloys for Hydrogen Permeability" presented at the North American Membrane Society/International Conference on Inorganic Membranes (NAMS/ICIM) 2010 Conference, Washington, D.C., July 2010.

Paglieri, S. N., et.al, "Ni-Nb-Zr Amorphous Alloy Membranes for Hydrogen Separation," presented at the 2010 AIChE Annual Meeting, Salt Lake City, UT, November 2010.

Paglieri, S. N., et.al, "Ni-Nb-Zr and Ni-Nb-Zr-Ta Amorphous Alloy Membranes for Hydrogen Separation," presented at the NAMS/ICIM 2010 Conference, Washington, D.C., July 2010.

Chandra, D., et.al, "Amorphous Alloy Membranes Prepared by Melt-Spin methods for Long-Term use in Hydrogen Separation Applications," presented at the International Energy Association Meeting, International Energy Agency Task 22 – Workshop, IEA Task-22 Death Valley, California April 2010.

Chandra, D., et.al, "Amorphous Alloy Membranes for Hydrogen Separation Applications," presented at the International Energy Association Meeting, International Energy Agency – Workshop, IEA Task-22, Copenhagen, Denmark, September 2011.

HIGH-TEMPERATURE, HIGH-PRESSURE MEMBRANES FOR HYDROGEN SEPARATION

primary project goals

Ceramatec set out to produce a prototype membrane that separates hydrogen from coal-derived synthesis gas (syngas) at operating conditions found at a typical coal gas facility without the use of precious metals. The goal of the research was to enhance performance and efficiency, as well as reduce the cost of hydrogen separation membrane technology.

technical goals

- Hydrogen flux of greater than 200 standard cubic feet per hour per square foot (scfh/ft^2).
- Hydrogen purity >99.5 percent.
- Manufacturing cost of less than \$100/ft^2.
- Efficient operation at relevant conditions.

technical content

Modern gasifier and water-gas shift (WGS) reactor technology produce syngas, a mixture primarily of hydrogen (H_2), carbon monoxide (CO), and carbon dioxide (CO_2). By using a pressure-driven hydrogen separation membrane, the high-pressure CO_2 is retained and thus amenable for capture and sequestration. Ceramic perovskite membranes show high hydrogen separation efficiency. Because of their low electronic conductivity, ceramic-metal composites have been investigated as a potential pressure-driven membrane. Thermochemical instability of the perovskite in syngas and processing incompatibilities between ceramic and metal components has hampered effective use of ceramic-metal composites. Ceramatec has demonstrated a ceramic-ceramic composite material that shows excellent stability in syngas at the desired membrane operating temperature range. The use of an all-ceramic membrane allows employing conventional ceramic processing for the manufacture of low-cost membrane devices.

The membrane consists of barium cerate as the proton conducting composition with ceria as the electron conducting composition. The technical benchmark criteria that are set for Year 1 of the project are: (A) demonstration of effective membrane proton conductivity of 0.02 S/cm, corresponding to >150 scfh/ft^2 wafer hydrogen separation; and (B) preliminary membrane design (layer thickness, channel dimensions) showing <\$200/ft^2 fabrication feasibility.

technology maturity:

Bench-Scale, Simulated Syngas

project focus:

Ceramic Membrane for H_2 Separation

participant:

Ceramatec

project number:

FE0001045

NETL project manager:

Susan Maley
susan.maley@netl.doe.gov

principal investigator:

S. Elangovan
Ceramatec
elango@ceramatec.com

partners:

CoorsTek
Sandia National Laboratories

performance period:

10/1/09 – 12/31/12

TABLE 1: MEMBRANE-BASED CO_2 SEPARATIONS

	Units	Current R&D Value	Target R&D Value
Materials Properties			
Materials of Fabrication for Selective Layer		Barium Cerate + Ceria	
Materials of Fabrication for Support Layer		Barium Cerate + Ceria	
Nominal Thickness of Selective Layer	µm	30 – 500	30
Membrane Geometry		Flat plate stack	Flat plate stack
Maximum Trans-Membrane Pressure	bar	20 psi	100 psi
Hours Tested Without Significant Degradation		100	1000
Manufacturing Cost for Membrane Material	$/m^2		
Membrane Performance			
Temperature	°C	600	600 – 700
H_2 Pressure Normalized Flux	GPU or equivalent	5 cm^3/cm^2/s for 38 cmHg, feed 500 µm	15X flux for 30 µm
H_2/H_2O Selectivity	-		
H_2/CO_2 Selectivity	-		
H_2/H_2S Selectivity	-		
Sulfur Tolerance	ppm	5 in limited duration test	
Type of Measurement	-	Mixed gas	
Proposed Module Design			
Flow Arrangement	-		
Packing Density	m^2/m^3		
Shell-Side Fluid	-		
Syngas Gas Flowrate	kg/hr		
CO_2 Recovery, Purity, and Pressure	% / % / bar		
H_2 Recovery, Purity, and Pressure	% / % / bar		
Pressure Drops Shell/Tube Side	bar		
Estimated Module Cost of Manufacturing and Installation	$\frac{\$}{kg/hr}$		

Definitions:

Membrane Geometry – Flat discs or sheets, hollow fibers, tubes, etc.

Pressure Normalized Flux – For materials that display a linear dependence of flux on partial pressure differential, this is equivalent to the membrane's permeance.

GPU – Gas Permeation Unit, which is equivalent to 10^{-6} cm^3 (1 atm, 0°C)/cm^2/s/cm Hg. For non-linear materials, the dimensional units reported should be based on flux measured in cm^3 (1 atm, 0°C)/cm^2/s with pressures measured in cm Hg. Note: 1 GPU = 3.3464×10^{-6} kg mol/m^2-s-kPa [SI units].

Type of Measurement – Either mixed or pure gas measurements; projected permeance and selectivities should be for mixture of gases found in pre-conditioned syngas.

Flow Arrangement – Typical gas-separation module designs include spiral-wound sheets, hollow-fiber bundles, shell-and-tube, and plate-and-frame, which result in either co-current, counter-current, cross-flow arrangements, or some complex combination of these.

Packing Density – Ratio of the active surface area of the membrane to the volume of the module.

Shell-Side Fluid – Either the permeate (H_2-rich) or retentate (syngas) stream.

Estimated Cost – Basis is kg/hr of CO_2 in CO_2-rich product gas; assuming targets are met.

Other Parameter Descriptions:

Membrane Permeation Mechanism – Ionic transfer based on partial pressure of hydrogen as the driving force. Flux is proportional to log partial pressure ratio and inversely proportional to membrane thickness.

Contaminant Resistance – Limited test duration of a few hours show tolerance to five parts per million (ppm) hydrogen sulfide (H_2S).

technology advantages

- All ceramic composite is amenable to low-cost ceramic fabrication technology.
- Membrane has 100 percent selectivity to hydrogen.

R&D challenges

- Fabrication technology development for thin supported membrane.
- Optimizing membrane composition for high hydrogen conductivity.
- Tolerance of contaminants, especially sulfur.

results to date/accomplishments

- Hydrogen separation efficiency of 100 percent using subscale testing of optimized wafer structure.
- Stack fabrication is complete.
- Composition showing proton conductivity of 0.02 S/cm at ≈ 600°C demonstrated.
- Cost model shows a pathway for achieving target cost.

next steps

This project ended on December 31, 2012.

available reports/technical papers/presentations

N/A

ADVANCED PALLADIUM MEMBRANE SCALE-UP FOR HYDROGEN SEPARATION

primary project goals

United Technologies Research Center (UTRC), in collaboration with Power+Energy, Inc. (P+E) and the University of North Dakota Energy and Environmental Research Center (UNDEERC), proposed to demonstrate palladium (Pd)-based membrane separation of hydrogen (H_2) from coal-derived synthesis gas (syngas) at the pre-engineering/pilot scale.

technical goals

- Construct, test, and demonstrate a Pd-copper (Cu) metallic tubular membrane micro-channel separator capable of producing 2 lb/day of H_2 at ≥95 percent recovery when operating downstream of an actual coal gasifier.
- Quantify the impact of simulated gas composition and temperature on separator performance.
- Compare the performance and durability of a surface-modified higher H_2 flux Pd-Cu membrane with the baseline Pd-Cu tubular membrane.
- Evaluate various materials of construction for the separator structural parts to ensure durability under harsh gasifier conditions.

technology maturity:

Bench- to Pilot-Scale, Simulated and Actual Syngas

project focus:

Membrane for H_2 Separation

participant:

United Technologies Research Center

project number:

FE0004967

NETL project manager:

Jason Hissam
jason.hissam@netl.doe.gov

principal investigator:

Sean Emerson
United Technologies Research Center
emersosc@utrc.utc.com

partners:

Power & Energy, Inc
University of North Dakota EERC

performance period:

9/24/10 – 10/31/12

TABLE 1: MEMBRANE-BASED CO_2 SEPARATIONS

	Units	Current R&D Value	Target R&D Value
Materials Properties			
Materials of Fabrication for Selective Layer		Pd, Cu	
Materials of Fabrication for Support Layer		N/A	
Nominal Thickness of Selective Layer	µm	45.8 to 58.6	
Membrane Geometry		Shell & tube	Shell & tube
Maximum Trans-Membrane Pressure	bar	34.5	
Hours Tested Without Significant Degradation		4087	43,829
Manufacturing Cost for Membrane Material	$/m^2	4300	
Membrane Performance			
Temperature	°C	250 – 600	250 – 500
H_2 Pressure Normalized Flux	GPU or equivalent	28 $ft^3ft^{-2}h^{-1}$(on real gasifier syngas)	
H_2/H_2O Selectivity	-	999,999	
H_2/CO_2 Selectivity	-	999,999	
H_2/H_2S Selectivity	-	999,999	
Sulfur Tolerance	ppm	963 for >24 h (H_2S/H_2 = 7.29×10 5 @ 500°C)	
Type of Measurement	-	Mixed	
Proposed Module Design			
Flow Arrangement	-	Shell & tube	
Packing Density	m^2/m^3	157	
Shell-Side Fluid	-	Pure H_2	
Syngas Gas Flowrate	kg/hr	100	
CO_2 Recovery, Purity, and Pressure	% / % / bar		
H_2 Recovery, Purity, and Pressure	% / % / bar	89%, 99.9999%, 1 bar	
Pressure Drops Shell/Tube Side	bar	34.5	
Estimated Module Cost of Manufacturing and Installation	$ / kg/hr		

Definitions:

Membrane Geometry – Flat discs or sheets, hollow fibers, tubes, etc.

Pressure Normalized Flux – For materials that display a linear dependence of flux on partial pressure differential, this is equivalent to the membrane's permeance.

GPU – Gas Permeation Unit, which is equivalent to 10^{-6} cm^3 (1 atm, 0°C)/cm^2/s/cm Hg. For non-linear materials, the dimensional units reported should be based on flux measured in cm^3 (1 atm, 0°C)/cm^2/s with pressures measured in cm Hg. Note: 1 GPU = 3.3464×10^{-6} kg mol/m^2-s-kPa [SI units].

Type of Measurement – Either mixed or pure gas measurements; projected permeance and selectivities should be for mixture of gases found in pre-conditioned syngas.

Flow Arrangement – Typical gas-separation module designs include spiral-wound sheets, hollow-fiber bundles, shell-and-tube, and plate-and-frame, which result in either co-current, counter-current, cross-flow arrangements, or some complex combination of these.

Packing Density – Ratio of the active surface area of the membrane to the volume of the module.

Shell-Side Fluid – Either the permeate (H_2-rich) or retentate (syngas) stream.

Estimated Cost – Basis is kg/hr of CO_2 in CO_2-rich product gas; assuming targets are met.

technology advantages

- The Pd-Cu alloy has stronger resistance to sulfur compared to traditional membranes, resulting in improved carbon dioxide (CO_2) capture efficiency.
- A Pd-Cu alloy-based CO_2 capture membrane is able to better withstand the corrosion and wear associated with membranes constructed of other materials.
- Less corrosion means the membrane does not need to be replaced as often, resulting in a lower overall operating cost for the power plant.

R&D challenges

- Membrane resistance to coal gasifier exhaust, such as carbon monoxide (CO), sulfur, arsenic, and mercury.
- Corrosion and metal dusting resistance of non-membrane materials of construction.
- Separation of 2 lb/day of H_2 operating downstream of an actual coal gasifier.

results to date/accomplishments

- Three different pilot-scale (≈1.5 ft^2) separators were evaluated downstream of coal gasifiers during four different tests and all of the separators demonstrated the targeted separation rate of 2 lb day^{-1} H_2.
- The separator design was proved to be leak tight and durable in the presence of gasifier exhaust contaminants, including sulfur, mercury, and arsenic at temperatures and pressures up to 500°C and 500 pounds per square inch absolute (psia).
- A 4,087-hour separator test showed that under the proper operating conditions, >2 lb day^{-1} H_2 could be separated at 95 percent recovery without total membrane failure.
- The Phase I gasifier runs at UNDEERC allowed the performance of the separators to be compared in real-time with the UTRC physics-based model describing membrane performance and showed that the H_2 permeability could be repeatedly predicted to within 10 percent.
- For H_2 mixtures with N_2, CO, CO_2, or H_2O, no inhibition effects from N_2, CO, CO_2, and H_2O were observed at temperatures between 400 and 500°C.
- Sievert's law was found valid for the H_2 permeation through the Pd-Cu separators for H_2 gas mixtures, indicating that external mass transfer resistance was insignificant due to the separator design.
- The Pd-Cu alloy membranes did not show a decline of H_2 permeance when five parts per million by volume (ppmv) to 39 ppmv hydrogen sulfide (H_2S) was added into the simulated syngas feed at temperatures between 400 and 500°C.
- Higher levels of H_2S (>100 ppmv) were shown to significantly reduce H_2 separation performance.
- Quantified the impact of H_2S on irreversible sulfide formation in the UTRC separators at 500°C.
- Gasifier testing revealed that high molecular weight hydrocarbons (unconverted coal tars) have the potential to retard H_2 separation even at temperatures above 500°C.
- Conditions that have a thermodynamic driving force to form coke were found to reduce the performance of the separators, presumably by blockage of effective separation area with carbon deposits. However, it was demonstrated that both in situ and ex situ (laboratory) air regeneration at 450°C could restore separator performance by burning out such deposits.
- Eight different alloy candidates, including nickel-based super alloys, chromia-formers, and alumina formers, were exposed to gasifier syngas conditions for >2,000 hours in the laboratory and at the National Carbon Capture Center (NCCC).

- The data showed that one of the most common materials of construction, which was also used for the some of the original Phase I separators, stainless steel 316 (SS-316), was highly susceptible to significant weight gain and oxide growth, which would severely compromise separator performance.
- Several alternative materials, such as stainless steel 310 (SS-310), were identified as suitable substitutes for SS-316 to ensure separator operation for ≥ five years.

next steps

This project ended on October 31, 2012

available reports/technical papers/presentations

She, Y.; Emerson, S.C.; Magdefrau, N.J.; Opalka, S.M.; Thibaud-Erkey, C.; and Vanderspurt, T.H., "Hydrogen Permeability of Sulfur Tolerant Pd-Cu Alloy Membranes." Journal of Membrane Science, (submitted for publication).

Emerson, S.C.; Magdefrau, N.J.; She, Y.; and Thibaud-Erkey, C., "Advanced Palladium Membrane Scale-up for Hydrogen Separation," DOE Award Number DE–FE0004967 Final Report. 2013, United Technologies Research Center: East Hartford, CT.

Opalka, S.M.; Løvvik, O.M.; She, Y.; and Emerson, S.C., "Reversibility of sulfur interactions with Pd Alloys," presented at 242nd ACS National Meeting. 2011: Denver, CO.

She, Y.; Thibaud-Erkey, C.; Opalka, S.M.; Magdefrau, N.J.; and Emerson, S.C., "Hydrogen Permeability of Sulfur Tolerant PdCu Alloy Membranes," presented at 242nd ACS National Meeting. 2011: Denver, CO.

Opalka, S.M.; Løvvik, O.M.; Emerson, S.C.; She, Y.; and Vanderspurt, T.H., Electronic origins for sulfur interactions with palladium alloys for hydrogen-selective membranes. Journal of Membrane Science, 2011. 375(1-2): p. 96-103.

Emerson, S.; Costello, J.; Dardas, Z.; Janowsky, G.; Hebert, R.; Magdefrau, N.; She, Y.; Thibaud-Erkey, C.; and Wittenzellner, J., "Advanced Palladium Membrane Scale-up for Hydrogen Separation," presented at 2011 DOE Annual Merit Review, Arlington, VA, May 13, 2011. *http://www.hydrogen.energy.gov/pdfs/review11/pd011_emerson_2011_o.pdf*.

Emerson, S.C.; Magdefrau, N.J.; Opalka, S.M.; She, Y.; Thibaud-Erkey, C.; Vanderspurt, T.H.; and Willigan, R.R., "Experimental Demonstration of Advanced Palladium Membrane Separators for Central High Purity Hydrogen Production," DOE Award Number DE-FC26-07NT43055 Final Report. 2010, United Technologies Research Center: East Hartford, CT. *http://www.osti.gov/bridge/purl.cover.jsp?purl=/1000469-aytn0s/1000469.pdf*.

Emerson, S.C., "Advanced Palladium Membrane Scale-up for Hydrogen Separation," Presented in Advancing the Hydrogen Economy Action Summit III. 2010, University of North Dakota EERC's National Center for Hydrogen Technology: Grand Forks, ND.

Emerson, S.; Dardas, Z.; Goberman, D.; Hale, T.; Hebert, R.; Marigliani, G.; Opalka, S.; She, Y.; Thibaud-Erkey, C.; Vanderspurt, T.H.; and Willigan, R., "Experimental Demonstration of Advanced Palladium Membrane Separators for Central High-Purity Hydrogen Production," presented at 2010 DOE Annual Merit Review, Washington, DC, June 2010. *http://www.hydrogen.energy.gov/pdfs/review10/pd011_emerson_2010_o_web.pdf*.

Opalka, S.M.; Vanderspurt, T.H.; Emerson, S.C.; Huang, W.; Wang, D.; Flanagan, T.; and She, Y., "Modeling of B_2 Phase PdCuTM Alloy Hydrogen Selective Membrane Performance," presented at 2008 TMS Annual Meeting, New Orleans, LA, March 2008.

Opalka, S.M.; Huang, W.; Wang, D.; Flanagan, T.B.; Løvvik, O.M.; Emerson, S.C.; She, Y.; and Vanderspurt, T.H., "Hydrogen interactions with the PdCu ordered B_2 alloy," J. Alloys Compd., 2007, 446-447, 583. *doi:10.1016/j.jallcom.2007.01.130*.

Huang, W.; Opalka, S.M.; Wang, D.; and Flanagan, T.B., "Thermodynamic Modeling of the Cu-Pd-H system," CALPHAD, 2007, 31, 3. *doi:10.1016/j.calphad.2007.02.002*.

Opalka, S.M.; Benn, R.C.; Emerson, S.C.; Flanagan, T.B.; Huang, W.; She, Y.; Wang, D.; and Vanderspurt, T.H., "Modeling of a stable, high permeability, sulfur resistant B_2 phase PdCuTM alloy," presented at the 234th ACS National Meeting, Boston, MA, August 2007.

Opalka, S.M.; Huang, W.; Wang, D.; Flanagan, T.B.; Løvvik, O.M.; Emerson, S.C.; She, Y.; and Vanderspurt, T.H., "PdCu B_2 Hydrogen Interactions under Advanced Water Gas Shift Membrane Reactor Conditions," presented at the 20th North American Catalysis Society Meeting, Houston, TX, June 2007.

Løvvik, O.M.; Opalka, S.M.; "Modeling the effect of adsorbates on the surface segregation of binary alloy surfaces," presented at the American Physical Society Annual Meeting, Denver, CO, March 2007.

Opalka, S.M.; Huang, W.; Løvvik, O.M.; Wang, D.; Flanagan, T.B.; Emerson, S.C.; She, Y.; and Vanderspurt, T.H., "Hydrogen interactions with the ordered BCC PdCu alloy," presented at International Symposium on Metal-Hydrogen Systems, Lahaina, HI, October 2006.

CARBON MOLECULAR SIEVE MEMBRANE AS A TRUE ONE-BOX UNIT FOR LARGE-SCALE HYDROGEN PRODUCTION

primary project goals

Media and Process Technology, Inc. set out to develop a one-box process for hydrogen (H_2) production based on carbon molecular-sieve (CMS) membranes. Gas cleanup was combined with a water-gas shift membrane reactor (WGS-MR) in a single processing unit.

technical goals

- Develop and test a one-box (gas cleanup and the WGS-MR), H_2 production process that integrates the four major technology components for synthesis gas (syngas) cleanup and conditioning into a single unit.
- Demonstrate the one-box process at bench-scale at the University of Southern California (USC), followed by a single-tube slipstream test at the Power Systems Development Facility (PSDF). Upon successful completion, develop and test a pilot-scale unit with a stream from a gasifier.
- Verify a mathematical model with the bench- and pilot-scale test results; use the mathematical model to conduct a techno-economic analysis.
- Evaluate the CMS membrane deposited on a ceramic substrate for candidate selection in future full-scale demonstrations.

technical content

The one-box process under investigation combined the gas cleanup and WGS-MR for H_2 production. Figure 1 displays how the one-box process was incorporated following the gasification of a coal-based feedstock. Syngas cleaning consisted of a water quench, particulate removal, WGS, and CMS membrane to produce an H_2 gas stream and a carbon dioxide (CO_2) stream ready for sequestration. The one-box process removes the sulfur and other contaminants from the H_2 product stream via the molecular sieving mechanism of the H_2-selective CMS membrane. If a high-purity H_2 product is necessary, an optional palladium (Pd) membrane can be installed for post-treatment of this sulfur-removed H_2 product stream. Table 1 compares the one-box process to a conventional H_2 purification processes.

technology maturity:

Bench-Scale

project focus:

Carbon Molecular-Sieve Membranes

participant:

Media and Process Technology

project number:

FC26-07NT43057

NETL project manager:

Richard Dunst
richard.dunst@netl.doe.gov

principal investigator:

Paul K.T. Liu
Media and Process Technology
mandpmain@aol.com

partners:

Power Systems Development Facility (PSDF)
University of Southern California (USC)

performance period:

5/2/07 – 5/1/12

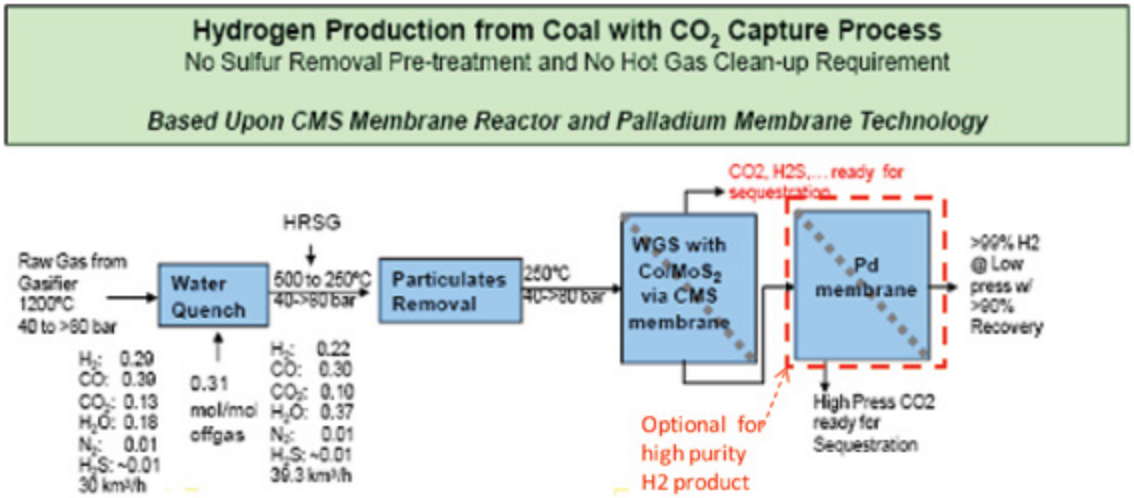

Figure 1: Incorporation of One-Box Process Following the Gasification of a Coal-Based Feedstock

TABLE 1: ONE-BOX PROCESS VERSUS A CONVENTIONAL HYDROGEN PURIFICATION PROCESSES

Performance Criteria	Conventional WGS with PSA	One-Box Process
H_2 Product Pressure, psig	High pressure, 200 to 400	Low pressure, e.g., 5 to >100 psig
H_2 Product Purity, %	>99.9	>99.9
H_2 Product Yield, %	60 to 80	>90
CO Conversion, %	90 to 97	>97
H_2O/CO Ratio for WGS	3 – 4	≈1.5
CO_2 Stream Pressure, psig	Low pressure, 5 to 10	High pressure, i.e., gasifier pressure

Within the one-box unit, a colbalt sulfide (CoS_2)/molybdenum disulfide (MoS_2) catalyst performs the WGS reaction. As shown in Figure 2, the CMS membrane incorporates a candle filter configuration that has a high resistance to hydrogen sulfide (H_2S), which allows the H_2 to permeate through the membrane and create an H_2-rich stream. After the H_2 permeates through the CMS membrane, a CO_2-rich stream remains outside the membrane at a high pressure ready for transportation.

Figure 2: Candle Filter Configuration for CMS Membrane and Module (pilot scale)

Figure 3 shows the permeance of the membrane under investigation for separation of H_2 and CO_2.

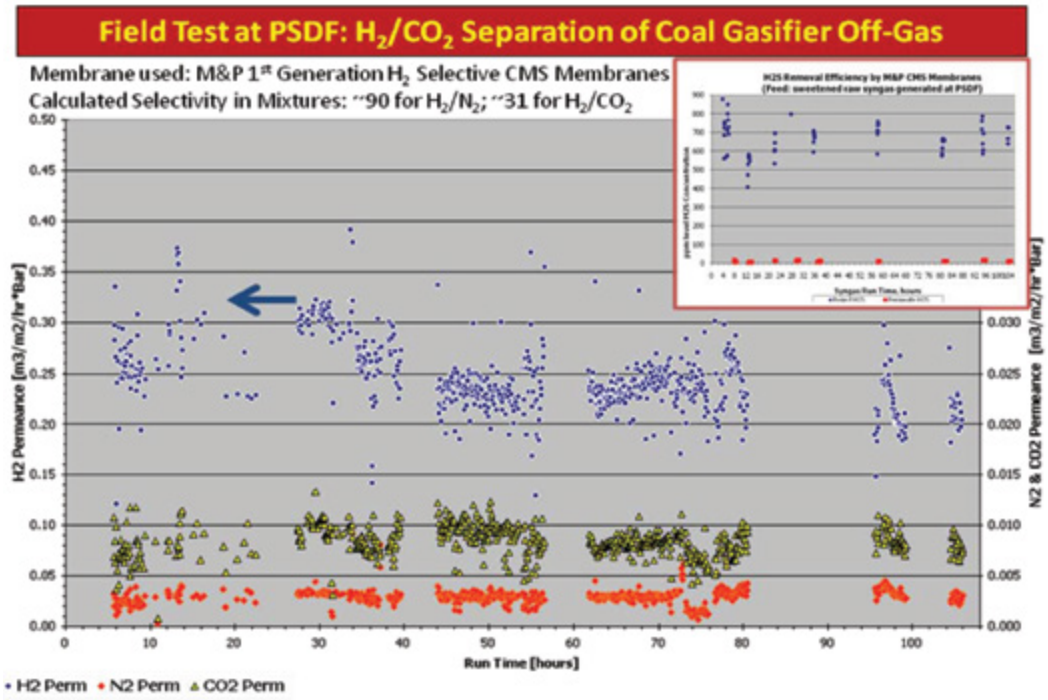

Figure 3: Permeances of Membranes for Separation of H_2 and CO_2 from Coal Gasifier Off-Gas Generated at PSDF

TABLE 2: MEDIA AND PROCESS TECHNOLOGY MEMBRANE PARAMETERS

	Units	Current R&D Value	Target R&D Value
Materials Properties			
Materials of Fabrication for Selective Layer		Carbon	
Materials of Fabrication for Support Layer		Ceramic	
Nominal Thickness of Selective Layer	µm		
Membrane Geometry		Shell & tube in candle filter configuration	
Maximum Trans-Membrane Pressure	bar		
Hours Tested Without Significant Degradation		>500	>1,000
Manufacturing Cost for Membrane Material	$/m^2		
Membrane Performance			
Temperature	°C	250	>600
H_2 Pressure Normalized Flux	GPU or equivalent		
H_2/H_2O Selectivity	-		
H_2/CO_2 Selectivity	-		
H_2/H_2S Selectivity	-		
Sulfur Tolerance	ppm		
Type of Measurement	-		

TABLE 2: MEDIA AND PROCESS TECHNOLOGY MEMBRANE PARAMETERS

	Units	Current R&D Value	Target R&D Value
Proposed Module Design			
Flow Arrangement	-		
Packing Density	m^2/m^3	250	500
Shell-Side Fluid	-		
Syngas Gas Flowrate	kg/hr		
CO_2 Recovery, Purity, and Pressure	% / % / bar		
H_2 Recovery, Purity, and Pressure	% / % / bar		
Pressure Drops Shell/Tube Side	bar		
Estimated Module Cost of Manufacturing and Installation	$\frac{\$}{kg/hr}$		

Definitions:

Membrane Geometry – Flat discs or sheets, hollow fibers, tubes, etc.

Pressure Normalized Flux – For materials that display a linear dependence of flux on partial pressure differential, this is equivalent to the membrane's permeance.

GPU – Gas Permeation Unit, which is equivalent to 10^{-6} cm^3 (1 atm, 0°C)/cm^2/s/cm Hg. For non-linear materials, the dimensional units reported should be based on flux measured in cm^3 (1 atm, 0°C)/cm^2/s with pressures measured in cm Hg. Note: 1 GPU = 3.3464×10^{-6} kg mol/m^2-s-kPa [SI units].

Type of Measurement – Either mixed or pure gas measurements; projected permeance and selectivities should be for mixture of gases found in pre-conditioned syngas.

Flow Arrangement – Typical gas-separation module designs include spiral-wound sheets, hollow-fiber bundles, shell-and-tube, and plate-and-frame, which result in either co-current, counter-current, cross-flow arrangements, or some complex combination of these.

Packing Density – Ratio of the active surface area of the membrane to the volume of the module.

Shell-Side Fluid – Either the permeate (H_2-rich) or retentate (syngas) stream.

Estimated Cost – Basis is kg/hr of CO_2 in CO_2-rich product gas; assuming targets are met.

technology advantages

- Produces a high-pressure CO_2 stream for sequestration.
- Achieves nearly complete carbon monoxide (CO) conversion; increases H_2 recovery from the gasification stream.
- Reduces the steam required for the WGS reaction, improving plant efficiency.
- Removes sulfur contaminants and uses an existing Pd membrane to filter >99.9 percent H_2.

R&D challenges

- Scaling the one-box process from laboratory scale to larger scales.
- The one-box process produces an H_2 stream product at a high pressure.
- Increase H_2 recovery rate at a high purity hydrogen.

results to date/accomplishments

- Assembly and testing of slipstream unit completed.
- Performed a membrane performance field test for >100 hours using a slipstream test at the PSDF facility.
- Completed an evaluation of the CoS_2/MoS_2 catalyst for WGS of simulated coal gasifier off-gas.
- Established the separation efficiency of key contaminants in a simulated stream.
- Experimentally determined the performance of the one-box process in a bench-scale unit.
- Evaluated the outside-coated CMS membrane and compared its performance with the existing membrane.

next steps

This project ended on May 1, 2012.

available reports/technical papers/presentations

Abdollahi, M., et.al, "Hydrogen Production from Syngas, Using a Catalytic Membrane Reactor," presented at the North American Membrane Society, Charleston, SC, June 2009.

Abdollahi, M., et.al, "Integrated One Box Process for Hydrogen Production From Syngas," presented at the 2009 Annual Meeting, American Institute of Chemical Engineers (AIChE), November 2009.

Abdollahi, M., et.al, "Process Intensification in Hydrogen Production From Syngas," Industrial & Engineering Chemistry Research, 2010, (International Symposium on Chemical Reaction Engineering special issue) 49 (21), 10986-10993.

Abdollahi, M., et.al, "Hydrogen Production from Coal-Derived Syngas Using a Catalytic Membrane Reactor-Based Process," Journal of Membrane Science,363, (1-2), November 1, 2010, 160-169.

PRE-COMBUSTION CARBON CAPTURE BY A NANOPOROUS, SUPERHYDROPHOBIC MEMBRANE CONTACTOR PROCESS

technology maturity:

Bench-Scale Using Simulated Syngas

project focus:

Nanoporous, Superhydrophobic Membrane Contactor Process

participant:

Gas Technology Institute

project number:

FE0000646

NETL project manager:

Arun Bose
arun.bose@netl.doe.gov

principal investigator:

Howard Meyer
Gas Technology Institute (GTI)
howard.meyer@gastechnology.org

partners:

PoroGen Corporation
Aker Process Solutions

performance period:

10/1/09 – 3/31/12

primary project goals

Gas Technologies Institute set out to develop cost-effective separation technology for carbon dioxide (CO_2) capture from synthesis gas (syngas) based on a hollow-fiber membrane contactor.

technical goals

- Design an energy-efficient, CO_2 recovery process that minimizes hydrogen loss.
- Tailor highly chemical-inert and temperature-stable, superhydrophobic, hollow-fiber poly (ether ether ketone) (PEEK) membrane for pre-combustion CO_2 capture.
- Manufacture a low-cost integrated membrane module.

technical content

The membrane contactor is a novel gas separation technology, advanced mass transfer device that operates with a liquid on one side of the membrane and gas on the other. Unlike gas separation membranes where a differential pressure across the membrane provides the driving force for separation, the membrane contactor can operate with pressures that are almost the same on both sides of the membrane. The driving force is the chemical potential of CO_2 absorption into the liquid. This process is thus easily tailored to suit the needs for pre-combustion CO_2 capture.

The hollow-fiber membrane is manufactured from an engineered material, called PEEK by PoroGen Corporation, using a patented process. Some key characteristics that make PEEK attractive for this process are: high heat resistance, high rigidity, high dimensional stability, good strength, excellent chemical resistance, excellent hydrolytic stability, an average pore size of 1 to 50 nm, an average porosity of 40 to 70 percent, and an 800-pound per square inch (psi) water break-through pressure.

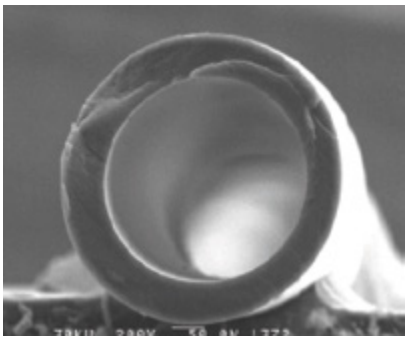

Figure 1: PEEK Hollow Fiber

The PEEK hollow-fiber membrane is nanoporous and can be surface modified to achieve superhydrophobicity; fiber OD can range from 200μm to 1mm; and fibers can be made with thin wall (<25μ) due to the strength of PEEK. The PEEK membrane pore size can be controlled from 1 to 50 nm, and asymmetric membrane structures can be utilized for high performance. The hollow fiber has a high burst pressure of greater than 500 pounds per

square inch gauge (psig), and a high collapse pressure of greater than 1,000 psig.

The advanced hollow-fiber module is constructed by computer-controlled helical winding. The modules exhibit favorable flow dynamics with minimal pressure drop, high uniform packing density, and thermodynamically efficient counter-current flow configuration.

The project was divided into two phases. The activities of Phase I included the development of hollow-fiber membranes suitable for the membrane contactor application with improved mass transfer, establishing feasibility of the proposed technology for syngas CO_2 separation, and performing initial process design and economic analysis based on test data.

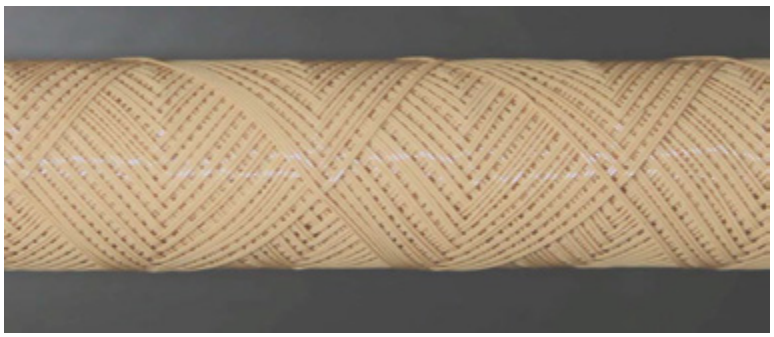

Figure 2: Advanced Hollow-Fiber Module Design

The focus of the Phase II activity was to scale-up the process from lab to bench scale. This included scale-up of the membrane module fabrication process so that membrane modules of the size suitable for large-scale application could be manufactured; bench-scale testing of the membrane contactor process stability and sensitivity to process variations; and refinement of the process economics based on bench-test data.

TABLE 1: GTI MEMBRANE PARAMETERS

	Units	Current R&D Value	Target R&D Value
Materials Properties			
Materials of Fabrication for Selective Layer		Perfluoro-oligomer	Perfluoro-oligomer/Polymer
Materials of Fabrication for Support Layer		PEEK	PEEK
Nominal Thickness of Selective Layer	µm	100	100
Membrane Geometry		Hollow Fiber	Hollow Fiber
Maximum Trans-Membrane Pressure	bar	3.4	Maximize
Hours Tested Without Significant Degradation		120	120
Manufacturing Cost for Membrane Material	$/m^2	Proprietary	Proprietary
Membrane Performance			
Temperature	°C	0 – 50	Maximize
H_2 Pressure Normalized Flux	GPU or equivalent		
CO_2 Removal Rate	kg/m^2/h	6	1.5
H_2/H_2O Selectivity	-	$3.7x10^{-6}$	$3.7x10^{-6}$
H_2/CO_2 Selectivity	-	$2.65x10^{-7}$	$2.65x10^{-7}$
H_2/H_2S Selectivity	-	7.5x10-5	7.5x10-5
Sulfur Tolerance	ppm	>100,000	>100,000
Type of Measurement	-	Equilibrium Calculation	Gas Analysis
Proposed Module Design		-	
Flow Arrangement	-	Counter-Current	Counter-Current
Packing Density	m^2/m^3	500 – 1,000	500 – 1,000
Shell-Side Fluid	-	Water, methanol, aMDEA	Water, methanol, Selexol

TABLE 1: GTI MEMBRANE PARAMETERS

	Units	Current R&D Value	Target R&D Value
Membrane Area/Module	m^2	1	100
Syngas Gas Flowrate	L/min	12	1,200
Solvent Flowrate	L/min	1.2	120
CO_2 Recovery, Purity, and Pressure	% / % / bar	90/96/5	90/96/5
H_2 Recovery, Purity, and Pressure	% / % / bar	99/91/50	99/91/50
Pressure Drops Shell/Tube Side	bar	0.4/0.04	0.4/0.04
Estimated Module Cost of Manufacturing and Installation	$\frac{\$}{m^2}$	$100	$40

Definitions:

Membrane Geometry – Flat discs or sheets, hollow fibers, tubes, etc.

Pressure Normalized Flux – For materials that display a linear dependence of flux on partial pressure differential, this is equivalent to the membrane's permeance.

GPU – Gas Permeation Unit, which is equivalent to 10^{-6} cm^3 (1 atm, 0°C)/cm^2/s/cm Hg. For non-linear materials, the dimensional units reported should be based on flux measured in cm^3 (1 atm, 0°C)/cm^2/s with pressures measured in cm Hg. Note: 1 GPU = 3.3464×10^{-6} kg mol/m^2-s-kPa [SI units].

Type of Measurement – Either mixed or pure gas measurements; projected permeance and selectivities should be for mixture of gases found in pre-conditioned syngas.

Flow Arrangement – Typical gas-separation module designs include spiral-wound sheets, hollow-fiber bundles, shell-and-tube, and plate-and-frame, which result in either co-current, counter-current, cross-flow arrangements, or some complex combination of these.

Packing Density – Ratio of the active surface area of the membrane to the volume of the module.

Shell-Side Fluid – Either the permeate (H_2-rich) or retentate (syngas) stream.

Estimated Cost – Basis is kg/hr of CO_2 in CO_2-rich product gas; assuming targets are met.

Contaminant Resistance – Membrane is resistant to all contaminants. Absorbents will be affected by contaminants to a lesser extent than a conventional packed or tray column.

technology advantages

- Counter-current flow allows for the most efficient mass transfer, thermodynamically.
- Computer-controlled winding provides structured packing to enable enhanced turbulence flow at fiber surface.
- High temperature stability for the desorption step.
- High liquid breakthrough pressure (no liquid wet out), high membrane integrity.
- High membrane productivity.

R&D challenges

- Membrane hydrophobic properties change with solvent contact, causing leakage.
- Mass transfer coefficient of 1.5 kg/m^2hr used in the economic evaluation was not sufficiently high for gas absorption in the membrane contactor.

results to date/accomplishments

- Membrane contactor stability and life testing completed.
- 90 percent CO_2 removal from simulated syngas demonstrated.
- High mass transfer coefficients achieved.
- Commercial size membrane contactor designed.
- Slipstream testing completed.

next steps

- The project ended on March 31, 2012.
- Additional module design and testing required to operate with more viscous solvents.
- Scale-up testing with 8-in diameter modules with coal-derived syngas.

available reports/technical papers/presentations

Meyer, H.; Zhou, J.; Bikson, B.; and Ding, Y., "Pre-combustion Carbon Capture by a Nanoporous, Superhydrophobic Membrane Contactor Process," presented at the 2011 NETL CO_2 Capture Technology Meeting in Pittsburgh, Pennsylvania, August 2011. *http://www.netl.doe.gov/publications/proceedings/11/co2capture/presentations/5-Friday/26Aug11-Meyer-GTI-Pre-Combustion%20Capture%20by%20Nanoporous%20Membr.pdf*.

Zhou, J.; Meyer, H.; and Bikson, B., "Pre-combustion Carbon Capture by a Nanoporous, Superhydrophobic Membrane Contactor Process," presented at the 2010 NETL CO_2 Capture Technology Meeting in Pittsburgh, Pennsylvania, September 2010. *http://www.netl.doe.gov/publications/proceedings/10/co2capture/presentations/friday/Shaojun%20Zhou%20-%20FE0000646.pdf*.

Meyer, H.; Zhou, J.; and Leppin, D., "Advanced H_2S and CO_2 Removal Technologies for Synthesis Gases", presented at the 4th International Freiberg Conference of IGCC and XtL Technologies, Dresden, Germany, May 2010. *http://www.gasification-freiberg.org/PortalData/1/Resources/documents/paper/IFC_2010/14-2-Meyer.pdf*.

Zhou, S.J.; Meyer, H.; Bikson, B.; and Ding, Y., "Hybrid Membrane Absorption Process for Post Combustion CO_2 Capture." AIChE Spring Meeting, San Antonio, Texas, March 2010. *http://www.aiche.org/cei/resources/chemeondemand/conference-presentations/hybrid-membrane-absorption-process-post-combustion-co2-capture*.

FABRICATION AND SCALE-UP OF POLYBENZIMIDAZOLE (PBI) MEMBRANE-BASED SYSTEM FOR PRE-COMBUSTION-BASED CAPTURE OF CARBON DIOXIDE

technology maturity:

Prototype, 0.4 tonnes CO_2/day

project focus:

High-Temperature Polymeric Membranes

participant:

SRI International

project number:

FC26-07NT43090

NETL project manager:

Robie Lewis
robie.lewis@netl.doe.gov

principal investigator:

Gopala Krishnan
SRI International
gopala.krishnan@sri.com

partners:

BP
Enerfex
LANL
Visage Energy
Whitefox

performance period:

3/30/07 – 3/31/12

primary project goals

SRI International (SRI) set out to develop a high-temperature polymer membrane and design a membrane module for pre-combustion capture of carbon dioxide (CO_2) from integrated gasification combined cycle (IGCC)-derived synthesis gas (syngas).

technical goals

- Design, construct, and test a pre-combustion-based CO_2 capture system (50 kWth) skid using polybenzimidazole (PBI) membranes developed by Los Alamos National Laboratory (LANL).
- Evaluate the effectiveness of the membrane elements for CO_2 separation in relation to permeability and selectivity.
- Perform a techno-economic analysis of an IGCC system employing PBI membranes for carbon capture and sequestration (CCS).

technical content

The membrane under development consists of hollow-fiber PBI, which is chemically and thermally stable at temperatures up to 450°C and pressures up to 55 atm (800 pounds per square inch gauge [psig]). This characteristic permits the use of a PBI membrane without requiring additional cooling after the water-gas shift (WGS) section of an IGCC system, including carbon capture. Further gas cooling is not required before the PBI membrane, increasing plant efficiency. In addition, the CO_2 is recovered at high pressure, decreasing CO_2 compression requirements.

PBI-based hollow fibers, as seen in Figure 1, offer a considerable advantage over stainless steel-coated tubes. They require as much as 24 times less membrane surface area and 305 times less membrane volume when using a 0.1 to 0.5 micrometer separation layer. Figure 2 represents a batch of hollow fiber prepared at SRI. Figure 3 is a bundle of asymmetric hollow fibers ready for insertion in a pressure vessel housing.

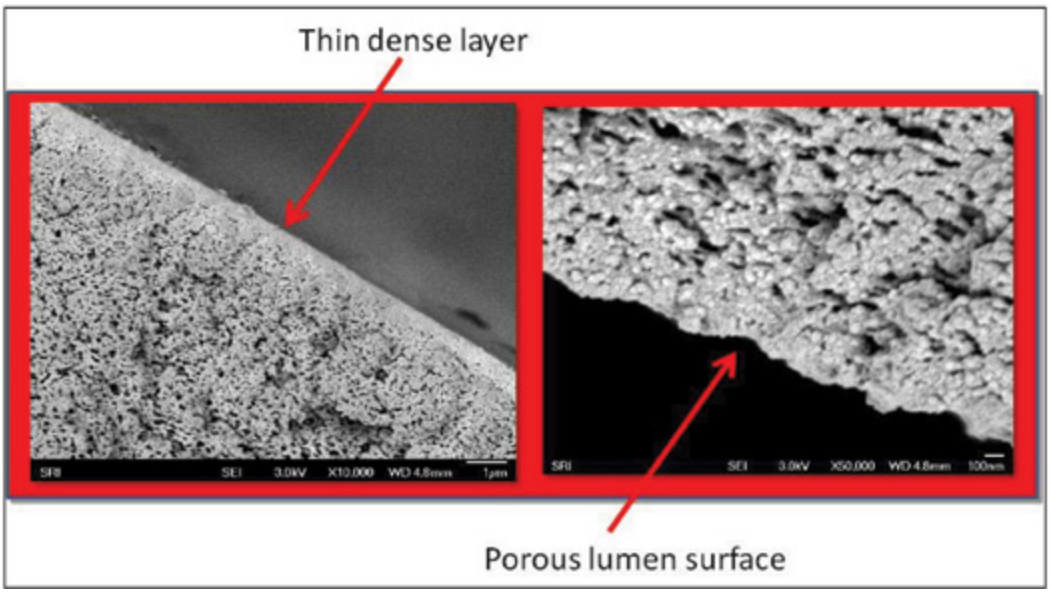

Figure 1: Cross Section of PBI Hollow Fiber Membrane with Dense Outer and Porous Inner Layers

The durability of narrow, single-bore, PBI-based hollow fibers has been shown to be considerable, with near-constant levels of permeability and selectivity over the course of 330 days while in the presence of hydrogen (H_2), carbon monoxide (CO), methane (CH_4), nitrogen (N_2), CO_2, and hydrogen sulfide (H_2S) at 250°C.

Figure 2: Bundle of PBI-Based, Asymmetric Hollow Fibers

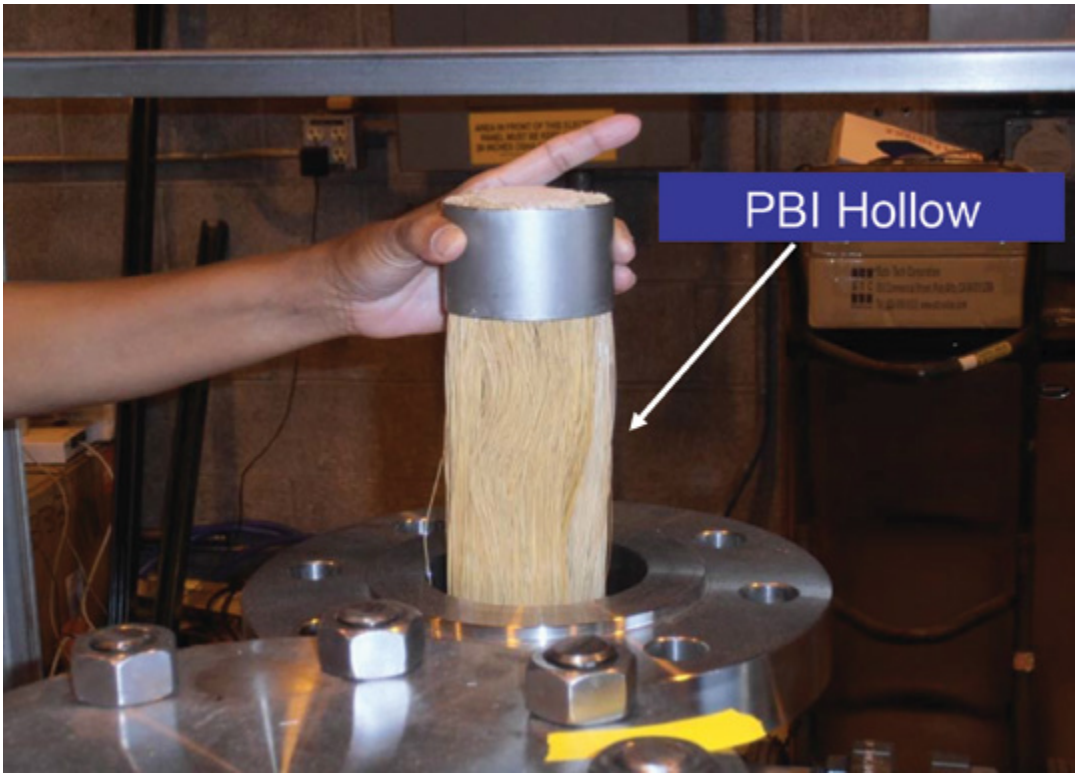

Figure 3: Photograph of 3-in Diameter x 1-ft Long Hollow Fiber Element for Insertion in Pressure Vessel

TABLE 1: PARAMETERS FOR PBI HOLLOW FIBER MEMBRANE

	Units	Current R&D Value	Target R&D Value
Materials Properties			
Materials of Fabrication for Selective Layer		PBI	
Materials of Fabrication for Support Layer		PBI	
Nominal Thickness of Selective Layer	µm	0.5	0.1
Membrane Geometry		Hollow fiber	Hollow fiber
Maximum Trans-Membrane Pressure	bar	10	10
Hours Tested Without Significant Degradation		300	1,000
Manufacturing Cost for Membrane Material	$/m^2	N/A	$15
Membrane Performance			
Temperature	°C	250	250
H_2 Pressure Normalized Flux	GPU or equivalent	80 to 100	100 to 120
H_2/H_2O Selectivity	-	No selectivity	No selectivity
H_2/CO_2 Selectivity	-	40	50
H_2/H_2S Selectivity	-	>500	1,000
Sulfur Tolerance	ppm	10,000	10,000
Type of Measurement	-	Pure and mixed gas	Mixed gas

TABLE 1: PARAMETERS FOR PBI HOLLOW FIBER MEMBRANE

	Units	Current R&D Value	Target R&D Value
Proposed Module Design			
Flow Arrangement	-	Counter-current	Counter-current
Packing Density	m^2/m^3	2,160	2,292
Shell-Side Fluid	-	Syngas	Syngas
Syngas Gas Flowrate	kg/hr	20	400
CO_2 Recovery, Purity, and Pressure	% / % / bar	90%, 91%, 1 bar	
H_2 Recovery, Purity, and Pressure	% / % / bar	98%, 48%, 10 bar	
Pressure Drops Shell/Tube Side	bar	10	20
Estimated Module Cost of Manufacturing and Installation	$\frac{\$}{kg/hr}$	N/A	161

Definitions:

Membrane Geometry – Flat discs or sheets, hollow fibers, tubes, etc.

Pressure Normalized Flux – For materials that display a linear dependence of flux on partial pressure differential, this is equivalent to the membrane's permeance.

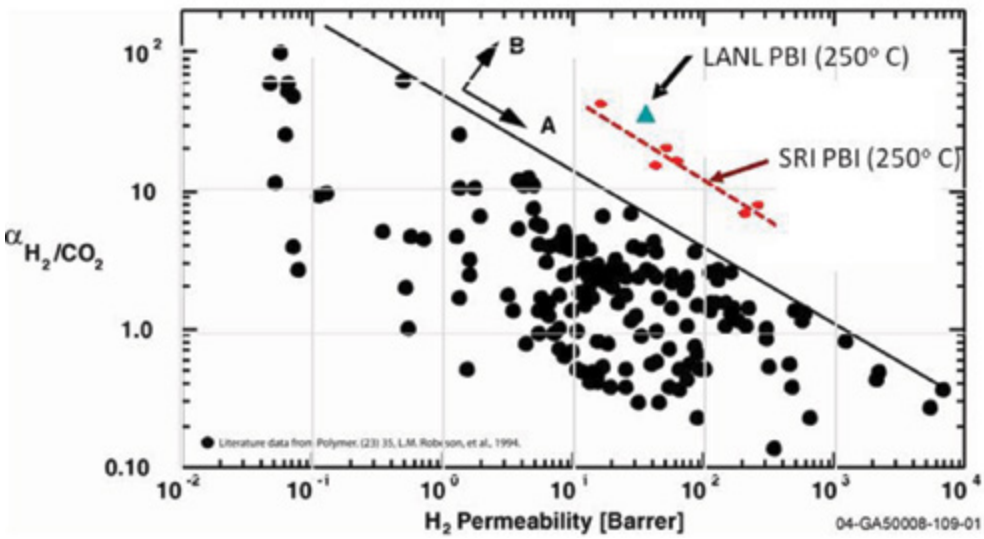

GPU – Gas Permeation Unit, which is equivalent to 10^{-6} cm^3 (1 atm, 0°C)/cm^2/s/cm Hg. For non-linear materials, the dimensional units reported should be based on flux measured in cm^3 (1 atm, 0°C)/cm^2/s with pressures measured in cm Hg. Note: 1 GPU = 3.3464×10^{-6} kg mol/m^2-s-kPa [SI units].

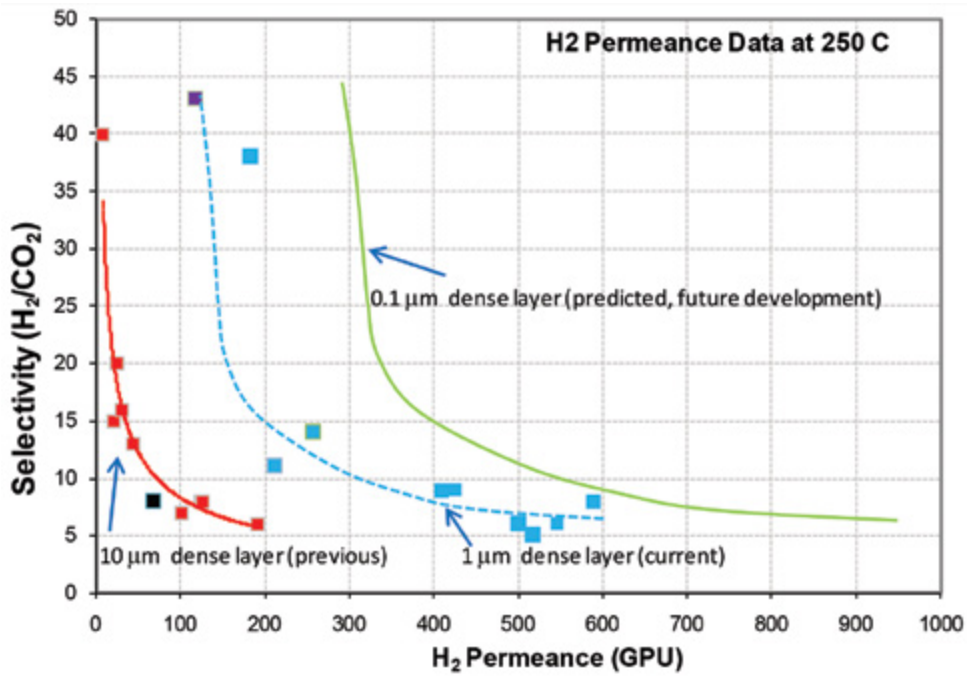

Type of Measurement – Either mixed or pure gas measurements; projected permeance and selectivities should be for mixture of gases found in pre-conditioned syngas.

Flow Arrangement – Typical gas-separation module designs include spiral-wound sheets, hollow-fiber bundles, shell-and-tube, and plate-and-frame, which result in either co-current, counter-current, cross-flow arrangements, or some complex combination of these.

Packing Density – Ratio of the active surface area of the membrane to the volume of the module.

Shell-Side Fluid – Either the permeate (H_2-rich) or retentate (syngas) stream.

Estimated Cost – Basis is kg/hr of CO_2 in CO_2-rich product gas; assuming targets are met.

Other Parameter Descriptions:

Contaminant Resistance – The PBI hollow fiber membrane is very tolerant to H_2S and steam.

Syngas Pretreatment Requirements – No pretreatment of the gas stream from WGS is required.

Membrane Replacement Requirements – The PBI membranes are highly durable. The membrane replacement requirements have not been established, but it is assumed to be several years before replacement is required.

Waste Streams Generated – No waste stream.

Process Design Concept –

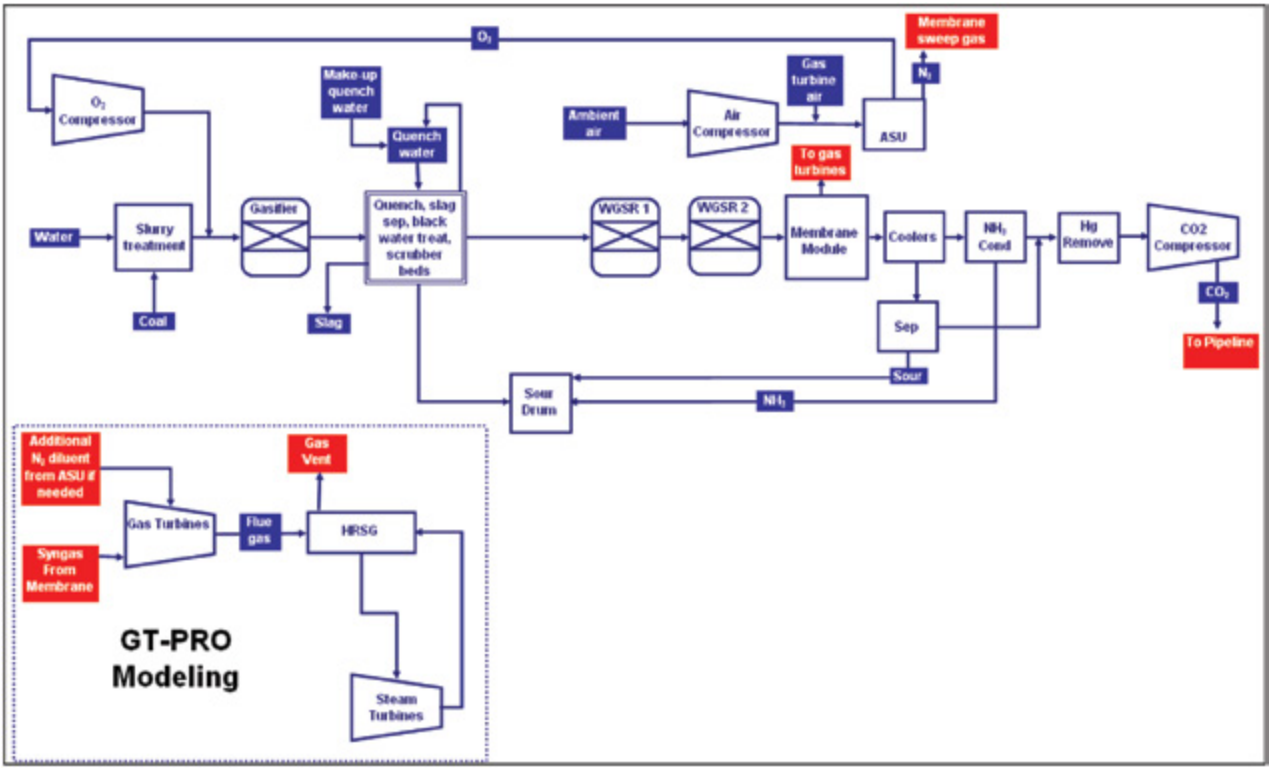

technology advantages

- The use of PBI offers several advantages over Selexol and conventional polymeric membranes, including reduced CO_2 compression costs due to the ability to deliver the concentrated CO_2 stream at pressures up to 55 atm (800 psig).
- PBI is thermally stable up to 450°C, and sulfur tolerant.
- Highest demonstrated operating temperature (400°C) of a polymer-based membrane with permeabilities and selectivities of interest.

R&D challenges

- Designing and synthesizing materials structure and configuration.
- Obtaining desired selectivity, productivity, chemical resistance, and durability at elevated temperatures and pressures by overcoming the limitations of current state-of-the-art technology.
- Understanding and optimizing mass transfer and the interaction with heat transfer.
- Scale-up of the technology from laboratory to larger scales.
- Integration and optimization of systems.

results to date/accomplishments

- Performed and analyzed several membrane separation scenarios under various temperatures, pressures, and gases, which showed:
  - PBI membrane-based, high-temperature CO_2 separation is competitive with the Selexol system.
  - Cost of electricity (COE) for CO_2 capture may approach the U.S. Department of Energy (DOE) goal under optimized membrane performance.
- Determined that multi-bore configuration offers increased selective layer area density, while single-bore provides higher mechanical stability.
- Completed characterization using scanning electron microscope (SEM) and X-ray tomography.
- Achieved an H_2 permeability of >100 GPU with an H_2/CO_2 selectivity of 40 at 250°C.
- Completed successful testing of the polymeric-metallic composite membrane in dry gas environments containing H_2, CO_2, CH_4, N_2, CO, and H_2S from 25 to 400°C.
- Completed successful testing of the polymer-based membrane on fully hydrated natural gas reformate up to 300°C.
- A test skid containing two 4-inch diameter modules was constructed and assembled.
- The hollow fiber module was tested for 120 hours at 225°C for its H_2 permeation characteristic and H_2/CO_2 selectivity.

next steps

This project ended on March 31, 2012.

available reports/technical papers/presentations

Krishnan, G., "Fabrication and Scale-up of Polybenzimidazole (PBI) Membrane Based System for Precombustion Based Capture of Carbon Dioxide," presented at 2011 NETL CO_2 Capture Technology Meeting, Pittsburgh, PA, August 2011. *http://www.netl.doe.gov/publications/proceedings/11/co2capture/presentations/5-Friday/26Aug11-Krishman-SRI-PBI%20Membranes%20for%20Pre-Combustion%20Captur.pdf*.

Krishnan, G.; Steele, D.; O'Brien, K.; Callahan, R.; Berchtold, K.; and Figueroa, J., "Simulation of a Process to Capture CO_2 From IGCC Syngas Using a High Temperature PBI Membrane," Energy Procedia, Volume 1, Issue 1, February 2009, pp 4079-4088.

NOVEL POLYMER MEMBRANE PROCESS FOR PRE-COMBUSTION CO_2 CAPTURE FROM COAL-FIRED SYNGAS

primary project goals

Membrane Technology & Research, Inc. (MTR) set out to develop a new polymer membrane and membrane separation process to capture carbon dioxide (CO_2) from shifted synthesis gas (syngas) generated by a coal-fired integrated gasification combined cycle (IGCC) power plant.

technical goals

Initial technical goals of this project were as follows:

- Investigate novel, high-temperature-stable polymers for use in hydrogen (H_2)/CO_2-selective membranes.
- Prepare composite polymer membranes and bench-scale modules that have H_2/CO_2 selectivities of 10 or higher and hydrogen permeances of greater than 200 gas permeation units (GPU) at syngas cleanup temperatures of 100 to 200°C.
- Optimize membrane process designs, investigate the sensitivity of different proposed processes to membrane performance, and assess the optimal integration of a membrane system into the syngas cleanup train.
- Conduct bench-scale testing of optimized membranes and membrane modules at MTR laboratories with simulated syngas mixtures to evaluate membrane performance and lifetime under expected operating conditions.
- Prepare a comparative evaluation of the cost of the polymer membrane-based separation process versus current cleanup technologies (Rectisol®, Selexol®, and PSA) and proposed future membrane reactors.

technical content

The objective of this project was the development of novel, H_2-selective polymer membranes for use in pre-combustion CO_2 capture. The first phase of the project was focused on down-selecting promising membrane materials and scaling-up their production. The optimized membranes produced by this effort (designated as Proteus membranes) show excellent H_2/CO_2 separation properties compared to conventional polymeric membranes. For example, hydrogen permeance of up to 800 GPU and H_2/CO_2 selectivity of greater than 12 were achieved using a simulated syngas mixture at 150°C and 50 pounds per square inch gauge (psig). These values are compared to literature data and the original project target (200 GPU for hydrogen permeance and 10 for H_2/CO_2 selectivity) in Figure 1 in the form of a tradeoff plot. These promising membranes were scaled-up and fabricated into lab-scale modules using high-temperature-stable module components identified during the project. Laboratory testing with simulated syngas mixtures confirmed that the modules (with 100 times the area of membrane stamps) performed as expected.

Following laboratory scale-up, field tests of the optimized membranes and modules using coal-derived syngas were conducted at the National Carbon Capture Center (NCCC) in

technology maturity:

Bench-Scale Using Actual Syngas

project focus:

Polymer Membrane Process Development

participant:

Membrane Technology & Research, Inc. (MTR)

project number:

FE0001124

NETL project manager:

Richard Dunst
richard.dunst@netl.doe.gov

principal investigator:

Tim Merkel
Membrane Technology & Research, Inc.
tim.merkel@mtrinc.com

partners:

Southern Company
Tetramer Technologies, LLC

performance period:

9/14/09 – 9/14/11

Wilsonville, Alabama. The main objective of the field tests was to evaluate the long-term stability of membrane or module components at elevated temperatures in the presence of water, sulfur-containing compounds, and heavy hydrocarbons. Figure 2 shows a module housing and one of the bench-scale Proteus membrane modules tested at NCCC. Field results indicate that all membrane and module components were stable in coal-derived syngas (feed pressures: 150 to 175 psig; feed temperatures: 120 to 135°C) for more than 600 hours. The field performance of both Proteus membrane stamps and modules was consistent with the results obtained in the lab, suggesting that the presence of sulfur-containing compounds (up to 780 parts per million [ppm] hydrogen sulfide [H_2S]), water vapor, and heavy hydrocarbons in the syngas feed stream had no adverse effect on performance.

Comparative economic analyses for a number of membrane process designs developed in this project (using H_2-selective membranes, alone or in the combination with CO_2-selective membranes) were also performed. The current field performance for Proteus membranes was used in the design analysis. A possible process design for pre-combustion CO_2 capture is shown in Figure 3. It uses a combination of H_2-selective Proteus membranes and CO_2-selective membranes. The economic study showed this design has the potential to reduce the increase in Levelized Cost of Electricity (LCOE) for 90 percent CO_2 capture to approximately 15 percent if co-sequestration of H_2S is viable, or 20 percent if H_2S must be removed separately. This value is still higher than the U.S. Department of Energy (DOE) target for increase in LCOE (10%); however, compared to the base-case Selexol process that gives a 30 percent increase in LCOE at 90 percent CO_2 capture, the membrane-based process appears promising. Future improvements in membrane performance have potential to lower the increase in LCOE further.

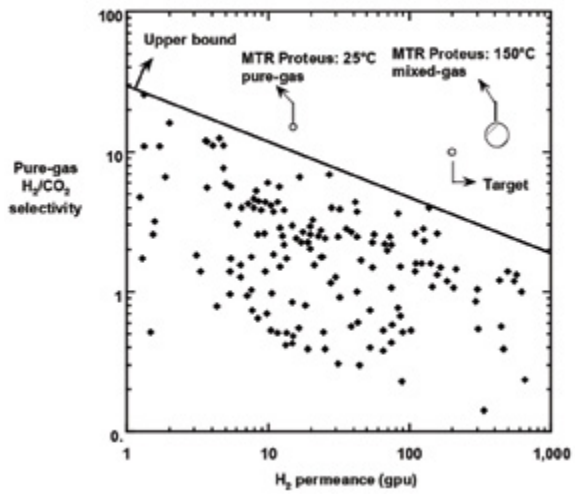

Figure 1: Trade-Off Plot of H_2/CO_2 Selectivity Versus H_2 Permeance

All data points below the upper bound line are for polymeric membranes reported in the membrane literature, and have been translated from pure-gas permeability at 25°C assuming a selective layer thickness of 1 micron. For the mixed-gas measurement, the feed gas is a H_2/CO_2 (50:50 vol%) mixture at 50 psig and 150°C.

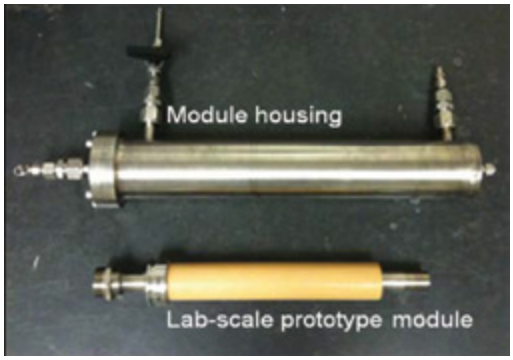

Figure 2: Photos of Module Housing and a Lab-Scale Proteus Membrane Module Tested at NCCC

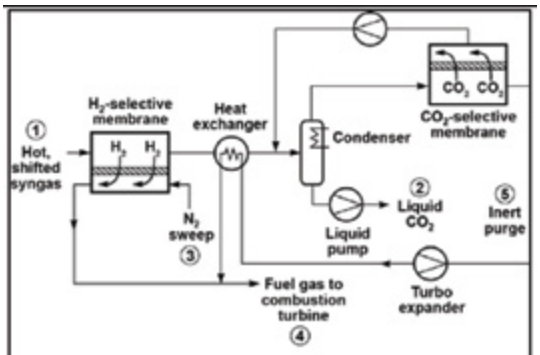

Stream compositions (mol%)	Stream # ① Hot, shifted syngas	② Liquid CO_2	③ N_2 sweep	④ Fuel gas	⑤ Inert purge
H_2	50.9	1.1	0	43.7	80.0
CO_2	36.8	96.9	0	3.2	4.0
CO	1.1	0.3	0	0.8	6.5
N_2	0.7	0.3	100	43.8	9.5
H_2S	0.5	1.4	0	0.01	0.02
H_2O	10.0	0	0	8.4	0
Flow rate (tons/h)	622	468	445	595	36.3
Pressure (bar)	50	140	32	32	50
Temperature (°C)	150	10	150	150	25

Figure 3: Possible Membrane Process for Pre-Combustion CO_2 Capture that Uses Both H_2- and CO_2-Selective Membranes

TABLE 1: MEMBRANE-BASED CO_2 SEPARATIONS

	Units	Current R&D Value	Target R&D Value
Materials Properties			
Materials of Fabrication for Selective Layer		Polymer	Polymer
Materials of Fabrication for Support Layer		Polymer	Polymer
Nominal Thickness of Selective Layer	µm	0.1	N/A
Membrane Geometry		Spiral wound	Spiral wound
Maximum Trans-Membrane Pressure	bar	12	N/A
Hours Tested Without Significant Degradation		600	N/A
Manufacturing Cost for Membrane Material	$/m^2	500	N/A
Membrane Performance			
Temperature	°C	120 – 150	150 – 200
H_2 Pressure Normalized Flux	GPU or equivalent	800	200
H_2/H_2O Selectivity	-	0.3	N/A
H_2/CO_2 Selectivity	-	15	10
H_2/H_2S Selectivity	-	30	N/A
Sulfur Tolerance	ppm	780	N/A
Type of Measurement	-	Mixed-gas	Mixed-gas
Proposed Module Design			
Flow Arrangement	-	Cross-flow	Cross-flow
Packing Density	m^2/m^3	700	700
Shell-Side Fluid	-	N/A	N/A
Syngas Gas Flowrate	kg/hr	4	N/A
CO_2 Recovery, Purity, and Pressure	% / % / bar	90%, 95%, 140 bar	

TABLE 1: MEMBRANE-BASED CO_2 SEPARATIONS

	Units	Current R&D Value	Target R&D Value
H_2 Recovery, Purity, and Pressure	% / % / bar	99%, 92%, 30 bar	
Pressure Drops Shell/Tube Side	bar	N/A	N/A
Estimated Module Cost of Manufacturing and Installation	$ / kg/hr	20	N/A

Definitions:

Membrane Geometry – Flat discs or sheets, hollow fibers, tubes, etc.

Pressure Normalized Flux – For materials that display a linear dependence of flux on partial pressure differential, this is equivalent to the membrane's permeance.

GPU – Gas Permeation Unit, which is equivalent to 10^{-6} cm^3 (1 atm, 0°C)/cm^2/s/cm Hg. For non-linear materials, the dimensional units reported should be based on flux measured in cm^3 (1 atm, 0°C)/cm^2/s with pressures measured in cmHg. Note: 1 GPU = 3.3464×10^{-6} kg mol/m^2-s-kPa [SI units].

Type of Measurement – Either mixed or pure gas measurements; target permeance and selectivities should be for mixture of gases found in shifted syngas.

Flow Arrangement – Typical gas-separation module designs include spiral-wound sheets, hollow-fiber bundles, shell-and-tube, and plate-and-frame, which result in either co-current, counter-current, cross-flow arrangements, or some complex combination of these.

Packing Density – Ratio of the active surface area of the membrane to the volume of the module.

Shell-Side Fluid – Either the permeate (CO_2-rich) or retentate (flue gas) stream.

Estimated Cost – Basis is kg/hr of CO_2 in CO_2-rich product gas; assuming targets are met.

N/A – Not available or not applicable for this project.

Other Parameter Descriptions:

Membrane Permeation Mechanism – Hydrogen-permeable polymeric membranes developed in this project are rigid glassy materials, where permeation occurs by the solution-diffusion mechanism. The mobility selectivity (which favors hydrogen) governs the separation of H_2 and CO_2.

Contaminant Resistance – The greatest concern would be fouling of the membrane surface due to residual particulate matter or heavy hydrocarbons/tars. Preliminary results from tests at NCCC suggest that existing syngas filters upstream of the membranes will be sufficient to protect the membranes from such surface fouling.

Syngas Pretreatment Requirements – As described above, existing syngas filters should be adequate protection for the membranes. Current temperature limitations on the polymeric membranes require the syngas to be cooled to ≈150°C prior to treatment.

Membrane Replacement Requirements – Periodic module replacement is required. The expected lifetime of membrane modules is three to five years.

Waste Streams Generated – The membrane process will not generate any waste streams. Periodic module replacement (expected lifetime of three years) will produce a small amount of solid waste. Typically, for the large membrane applications like sea water desalination by reverse osmosis, these membrane modules are sent to a landfill.

Process Design Concept – A possible process design for pre-combustion CO_2 capture using a combination of hydrogen-permeable Proteus membranes and CO_2-selective membranes is shown in Figure 3. The field performance obtained at NCCC for Proteus membranes was used in the design analysis. Composition and operating conditions for the shifted syngas feed are shown in Table 2.

Proposed Module Design – A spiral-wound membrane module design was used. The hydrogen-enriched stream is produced at lower pressure in the permeate, while the CO_2-enriched stream on the retentate side maintains pressures near those of the syngas feed stream.

TABLE 2: COMPOSITION AND OPERATING CONDITIONS FOR SHIFTED SYNGAS FEED USED IN FIGURE 3 PROCESS DESIGN

Syngas Components	Composition of Shifted Syngas (wet basis, mol %)
H_2	50.9
CO_2	36.8
CO	1.1
N_2	0.7
H_2S	0.5
H_2O	10.0
Shifted Syngas Feed Operating Conditions	
Pressure	50 bar
Temperature	150°C

technology advantages

- Membranes developed in this project are based on polymer materials that show higher hydrogen permeance and higher H_2/CO_2 selectivity than conventional polymer materials. These membranes can be fabricated into robust, stable, and inexpensive modules of the type currently used commercially in the refinery and natural gas industries to separate gas mixtures at high pressures.
- These polymeric membranes are not sensitive to sulfur species in the syngas feed.
- The process design using both H_2- and CO_2-selective membranes will create a high-pressure CO_2 stream capturing greater than 90 percent of CO_2 in post-shift syngas and fuel gas stream containing greater than 99 percent of the syngas hydrogen. This membrane process has the potential to reduce the increase in LCOE for 90 percent CO_2 capture to approximately 15 percent if co-sequestration of H_2S is viable, and 20 percent if H_2S is removed separately.
- Membranes offer the advantages of simple, passive operation; no use of hazardous chemicals and the subsequent waste handling and disposal issues; no steam use; and a small footprint.

R&D challenges

- Polymer materials that are used in the selective layer and the support layer need to be thermally stable at high operating temperatures.
- Membrane modules to be developed for this application have to endure the extended long-term operations at high temperatures (≈150°C). All the module components, including feed and permeate spacers, support papers, and glues, require new development for this application.
- There is little membrane operational experience with real coal-derived syngas.

results to date/accomplishments

- Confirmed that composite membranes made from novel polymers give hydrogen permeances of at least 200 GPU and H_2/CO_2 selectivities of greater than 10 in bench-scale tests as well as in field tests.
- Completed scale-up of composite membranes on a commercial coater. Lab-scale Proteus membrane modules were also developed using scaled-up Proteus membranes and high-temperature-stable module components identified during this project.
- Completed five, 500-hour slipstream tests of membrane stamps and/or bench-scale membrane modules with coal-derived syngas at NCCC. Both membrane stamps and membrane modules show stable performance treating syngas containing up to 780 ppm H_2S. The average membrane field performance (H_2/CO_2 selectivity of 15 to 25; H_2 permeance of 200 to 300 GPU) exceeds project targets.
- Performed an economic analysis of a number of membrane process designs developed in this project (using H_2-selective membranes, alone or in the combination with CO_2-selective membranes). The field performance at NCCC for Proteus membranes was used in the design analysis. The study showed the current best design has the potential to reduce the increase in LCOE for 90 percent CO_2 capture to approximately 15 percent if co-sequestration of H_2S is viable. This value is still higher than the DOE target for increase in LCOE (10%); however, compared to the base-case Selexol process that gives a 30 percent increase in LCOE at 90 percent CO_2 capture, the membrane-based process appears promising.

next steps

- This project ended on September 14, 2011.
- Future activities should include: (1) continued scale-up of Proteus modules to commercial size elements; (2) increasing the maximum operating temperature of the membrane modules to 200°C; and (3) field testing of an integrated membrane process using H_2- and CO_2-selective membranes.

available reports/technical papers/presentations

T. C. Merkel, M. Zhou, and R. W. Baker; "Carbon Dioxide Capture with Membranes at an IGCC Power Plant;" J. Membr. Sci. 389, 441 (2012).

T. C. Merkel, M. Zhou, S. Thomas, H. Lin, A. Serbanescu, and K. Amo, "Novel Polymer Membrane Process For Pre-Combustion CO_2 Capture From Coal-Fired Syngas," presented at 2011 NETL CO_2 Capture Technology Meeting, August 2011.

T.C. Merkel, M. Zhou, S. Thomas, H. Lin, A. Serbanescu, J. Vu, and K. Amo; Novel Polymer Membrane Process for Pre-Combustion CO_2 Capture from Coal-Fired Syngas; Final report submitted to DOE NETL, December 2011.

T. C. Merkel, S. Thomas, M. Zhou, H. Lin, and A. Serbanescu, "Novel Polymer Membrane Process For Pre-Combustion CO_2 Capture From Coal-Fired Syngas," presented at 2010 NETL CO_2 Capture Technology Meeting, September 2010.

M. Zhou, S. Thomas, H. Lin, A. Serbanescu, and T. Merkel, Polymer Membranes For Pre-Combustion CO_2 Capture, 2010 NAMS Annual Meeting & International Conference on Inorganic Membranes.

M. Zhou, S. Thomas, H. Lin, A. Serbanescu, and T. Merkel, Polymer Membranes For Pre-Combustion CO_2 Capture, 2010 AIChE Spring Meeting & 6th Global Congress on Process Safety.

DEVELOPMENT OF LOW-COST MEMBRANES FOR $H_2/CO_2/CO$ SEPARATION FOR WGS REACTORS

primary project goals

This project's primary goal was the synthesis of low-temperature bimetallic nanocatalysts for use in the water-gas shift (WGS) reaction for hydrogen (H_2) production from a carbon monoxide (CO) and steam mixture. Grambling State University also set out to develop low-cost metal/ceramic membranes for H_2 separation and cellulose acetate membranes for carbon dioxide (CO_2) separation.

technical goals

- Develop micro/mesoporous ceramic membrane disks, composed of tantalum (Ta)/niobium (Nb) alloys, for optimum H_2 separation.
- Examine the effect of alloying the Ta/Nb ceramic membranes with other metals to reduce H_2 embrittlement and promote cathodic protection.
- Develop cellulose acetate interlayers between two micro/mesoporous ceramic disks for optimum H_2 and CO_2 separation.
- Examine the effects of plasticizers on CO_2 permeability.
- Prepare and optimize nano-bimetallic nickel (Ni)/molybdenum (Mo), cobalt (Co)/cerium (Ce), copper (Cu)/Ni, and iron (Fe)/Mo catalysts supported on mesoporus γ-$Al2O_3$ and $Al2O_3/SiO_2$ granules for the WGS reaction.
- Develop and demonstrate a prototype reactor based on novel, low-cost metal (Ta/Nb)/ceramic and cellulose acetate membranes to separate H_2 and CO_2.
- Examine the performance of Ta/Nb and cellulose acetate/ceramic membranes under WGS conditions.

technical content

The WGS utilizes Cu-Ni-Ce/alumina granular nanocatalysts that react with CO and steam to produce H_2 and CO_2. Figure 1 represents the chemical reaction inside the WGS as the gas stream is exposed to the catalyst and converts the CO to CO_2. The Cu-Ce catalyst converts approximately 69 percent of the CO, while Cu-Ce-Ni converts approximately 83 percent during a 10-hour reaction period.

Table 1 displays different compositions of metal catalysts investigated for promoting the WGS reaction. Four catalyst compositions (rows 3, 4, 9, and 10 in Table 1) are evaluated for high-temperature shift (HTS) reactions, with optimum temperature between 350 to 400°C, and six compositions (1, 2, 5, 6, 7, and 8 in Table 1) for low-temperature shift (LTS) reactions, with optimum temperatures between 150 to 300°C, obtained using a Gas-Phase Dynamic Flow Reactor Study.

technology maturity:
Laboratory-Scale

project focus:
Catalysts for Use in Membrane Reactors

participant:
Grambling State University

project number:
FG26-07NT43064

NETL project manager:
Jason Hissam
jason.hissam@netl.doe.gov

principal investigator:
Naidu V. Seetala
Grambling State University
naidusv@gram.edu

partners:
Louisiana Tech University

performance period:
12/20/06 – 6/30/11

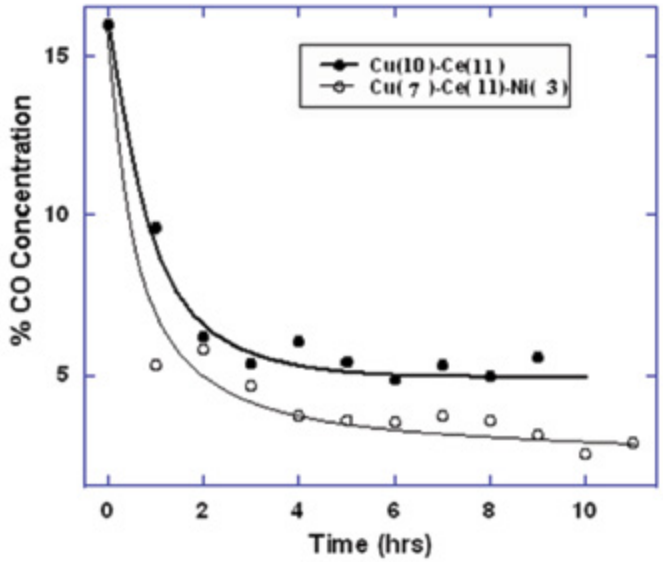

Figure 1: Catalytic Conversion of CO to CO_2

TABLE 1: COMPOSITIONS OF METAL CATALYSTS UNDER INVESTIGATION FOR PROMOTING WGS REACTION

Catalyst Composition			% Metal	$Ni(NO_3)2 \cdot 6H_2O)$ (g)	Wt. (g)	Wt. CuO (g)	Wt. Cu (g)	Wt. CeO_2 (g)	Wt. Ce (g)	Wt. Fe_2O_3 (g)	Wt. Fe (g)
Cu (%)	Ni (%)	Ce (%)									
10		11	20.96	0.00	0.00	0.46	0.37	0.52	0.42	0.00	0.00
7	3	11	20.70	0.54	0.11	0.33	0.26	0.48	0.39	0.00	0.00
5	5	11	21.31	0.93	0.19	0.24	0.19	0.49	0.40	0.00	0.00
3	7	11	21.29	1.31	0.26	0.14	0.11	0.48	0.39	0.00	0.00
	10	11	21.32	1.86	0.38	0.00	0.00	0.46	0.38	0.00	0.00
	10	9	19.15	1.80	0.36	0.00	0.00	0.37	0.30	0.00	0.00
	10	6	16.09	1.75	0.35	0.00	0.00	0.24	0.19	0.00	0.00
	10	3	13.04	1.69	0.34	0.00	0.00	0.11	0.09	0.00	0.00
	10		10.00	1.64	0.33	0.00	0.00	0.00	0.00	0.00	0.00
7	9	13	28.39	1.93	0.39	0.35	0.28	0.54	0.45	0.00	0.00
Fe(10%) Ce(11%)			21.05	0.00	0.00	0.00	0.00	0.51	0.41	0.54	0.38

The optimum reaction temperatures obtained from a gas-phase flow reactor, and the CO conversion and CO_2 production obtained from a gas-phase batch reactor at optimum temperatures for Ni-Cu-Ce/alumina LTS and HTS catalysts, are summarized in Table 2.

TABLE 2: OPTIMUM REACTION TEMPERATURE, CO CONVERSION, AND CO_2 PRODUCTION AFTER 13 HOURS OF REACTION FOR LTS AND HTS NI-CU-CE/ALUMINA CATALYSTS

Catalyst	Optimum Temp. (°C)	CO Conversion (percent moles)	CO_2 Production (percent moles)
Low Temperature Shift (LTS) catalysts			
Ni(10%)Ce(3%)	300	92.72	29.09
Ni(10%)Ce(9%)	250	77.2	61.81
Ni(10%)Ce(11%)	250	73.63	71.81
Ni(10%)Ce(6%)	300	72.72	43.63
Cu(10%)Ce(11%)	200	48.18	62.72
Ni(3%)Cu(7%)Ce(11%)	200	47.09	17.27
High Temperature Shift (HTS) catalysts			
Ni(10%)	400	98.18	17.2
Ni(5%)Cu(5%)Ce(11%)	350	80.09	100.0
Ni(7%)Cu(3%)Ce(11%)	350	59.09	90.9
Fe(10%)Ce(11%)	350	7.27	17.2

After the WGS reaction takes place, the H_2 will be separated from the CO_2 using an outer shell ceramic membrane of Ta/Nb metal that will be used to separate H_2 from the rest of the constituents. A membrane consisting of cellulose acetate (CA) with 25 percent triethyl citrate plasticizer is used to separate the CO_2. The CA will be located between two mesoporous ceramic disks. Figure 2 shows a blank ceramic disk on the left (a) and the ceramic disk on the right (b) sputter coated with Nb. The metal film coating the disk is approximately 400 nanometers thick and the coatings will be applied through sputtering (physical) techniques or alumino-thermic (chemical) methods. The parameters for Ta/Nb membranes are given in Table 3 and those for CA membranes are given in Table 4.

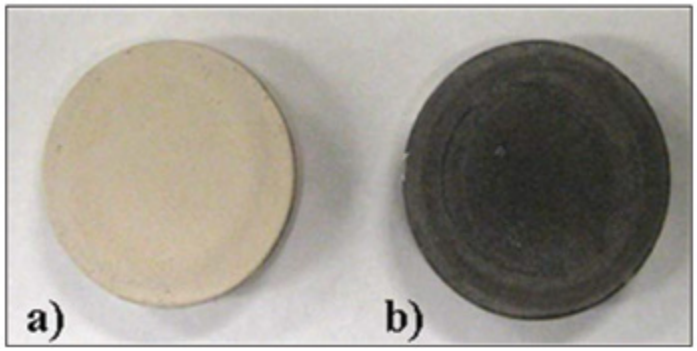

Figure 2: Uncoated and Coated Ceramic Disks

Pilot-scale testing will be performed on a slipstream from the air-blown gasifier at the National Carbon Capture Center (NCCC) in Wilsonville, Alabama. SRI has designed a pilot-scale, continuous, integrated test system. The equipment is being procured and will be assembled. The pilot-scale test will emphasize stability of integrated operation. The effects of trace contaminants will be observed, as the pilot tests will use a gas stream from an operating gasifier that has undergone minimum cleanup and will contain trace contaminants.

TABLE 3: GRAMBLING PARAMETERS FOR TA/NB MEMBRANES

	Units	Current R&D Value	Target R&D Value
Materials Properties			
Materials of Fabrication for Selective Layer		Ta/Nb 400 nm thin films	
Materials of Fabrication for Support Layer		Ceramic or asbestos	
Nominal Thickness of Selective Layer	µm	0.4	1.0
Membrane Geometry		Film	Film
Maximum Trans-Membrane Pressure	bar	5	15
Hours Tested Without Significant Degradation		1 week	1 month
Manufacturing Cost for Membrane Material	$/cm^2	34	58
Membrane Performance			
Temperature	°C	350	400
H_2 Pressure Normalized Flux	GPU or equivalent	N/A	N/A
H_2/H_2O Selectivity	-		
H_2/CO_2 Selectivity	-	70%	90%
H_2/H_2S Selectivity	-		
Sulfur Tolerance	ppm		
Type of Measurement	-	Permeability (indirect)	Permeability (direct)
Proposed Module Design			
Flow Arrangement	-		
Packing Density	m^2/m^3	N/A	N/A
Shell-Side Fluid	-		
Syngas Gas Flowrate	kg/hr		
CO_2 Recovery, Purity, and Pressure	% / % / bar		
H_2 Recovery, Purity, and Pressure	% / % / bar		
Pressure Drops Shell/Tube Side	bar		
Estimated Module Cost of Manufacturing and Installation	$\frac{\$}{kg/hr}$	10,000	4,000

TABLE 4: GRAMBLING PARAMETERS CA MEMBRANE

	Units	Current R&D Value	Target R&D Value
Materials Properties			
Materials of Fabrication for Selective Layer			
Materials of Fabrication for Support Layer		Cellulose/filter paper	
Nominal Thickness of Selective Layer	µm	30 – 200	500
Membrane Geometry		Film	Film
Maximum Trans-Membrane Pressure	bar	5	15
Hours Tested Without Significant Degradation		4 days	1 month
Manufacturing Cost for Membrane Material	$/m^2	$500	$500
Membrane Performance			
Temperature	°C	25	25
H_2 Pressure Normalized Flux	GPU or equivalent		
H_2/H_2O Selectivity	-		

TABLE 4: GRAMBLING PARAMETERS CA MEMBRANE

	Units	Current R&D Value	Target R&D Value
H_2/CO_2 Selectivity	-		
H_2/H_2S Selectivity	-		
Sulfur Tolerance	ppm		
Type of Measurement	-		
Proposed Module Design			
Flow Arrangement	-		
Packing Density	m^2/m^3		
Shell-Side Fluid	-		
Syngas Gas Flowrate	kg/hr		
CO_2 Recovery, Purity, and Pressure	% / % / bar		
H_2 Recovery, Purity, and Pressure	% / % / bar		
Pressure Drops Shell/Tube Side	bar		
Estimated Module Cost of Manufacturing and Installation	$\frac{\$}{kg/hr}$	≈$500	<$500

Definitions:

Membrane Geometry – Flat discs or sheets, hollow fibers, tubes, etc.

Pressure Normalized Flux – For materials that display a linear dependence of flux on partial pressure differential, this is equivalent to the membrane's permeance.

GPU – Gas Permeation Unit, which is equivalent to 10^{-6} cm^3 (1 atm, 0°C)/cm^2/s/cm Hg. For non-linear materials, the dimensional units reported should be based on flux measured in cm^3 (1 atm, 0°C)/cm^2/s with pressures measured in cm Hg. Note: 1 GPU = 3.3464×10^{-6} kg mol/m^2-s-kPa [SI units].

Type of Measurement – Either mixed or pure gas measurements; projected permeance and selectivities should be for mixture of gases found in pre-conditioned syngas.

Flow Arrangement – Typical gas-separation module designs include spiral-wound sheets, hollow-fiber bundles, shell-and-tube, and plate-and-frame, which result in either co-current, counter-current, cross-flow arrangements, or some complex combination of these.

Packing Density – Ratio of the active surface area of the membrane to the volume of the module.

Shell-Side Fluid – Either the permeate (H_2-rich) or retentate (syngas) stream.

Estimated Cost – Basis is kg/hr of CO_2 in CO_2-rich product gas; assuming targets are met.

Other Parameter Descriptions:

Membrane Permeation Mechanism – The membrane permeation mechanism is a combination of adsorption/dissociation on the membrane surface and diffusion.

Syngas Pretreatment Requirements – Pure CO and steam are used for WGS reaction to produce H_2.

Waste Streams Generated – CO_2 is produced through WGS reaction.

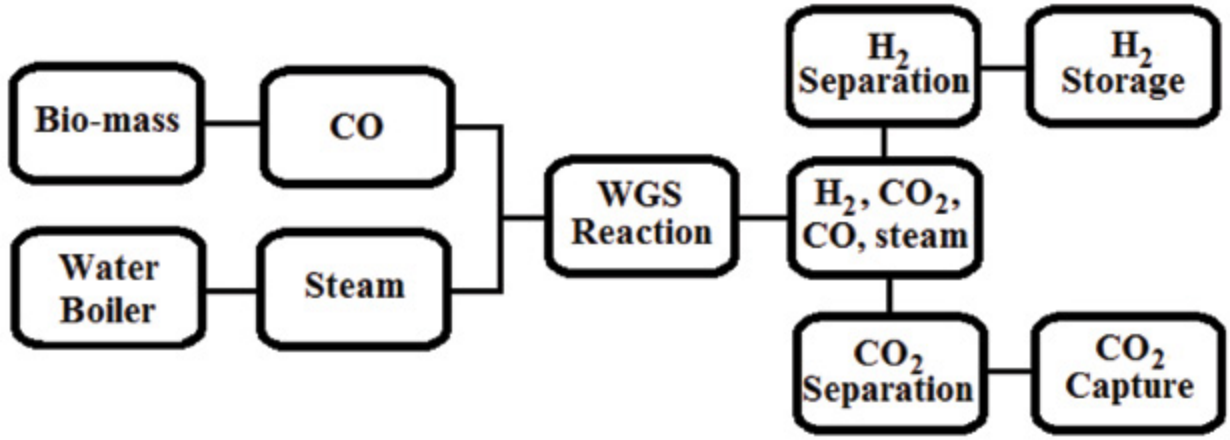

Figure 3: Process Design Concept

Proposed Module Design – A three-stage prototype stainless steel reactor with integrated housing for: (1) WGS reaction catalysts; (2) H_2/CO_2 separation metal/ceramic or metal/asbestos membranes; and (3) CO/CO_2 separation CA-filter membranes designed with capabilities to perform WGS reactions at temperatures as high as 400°C and withstand gas pressures up to 15 bars.

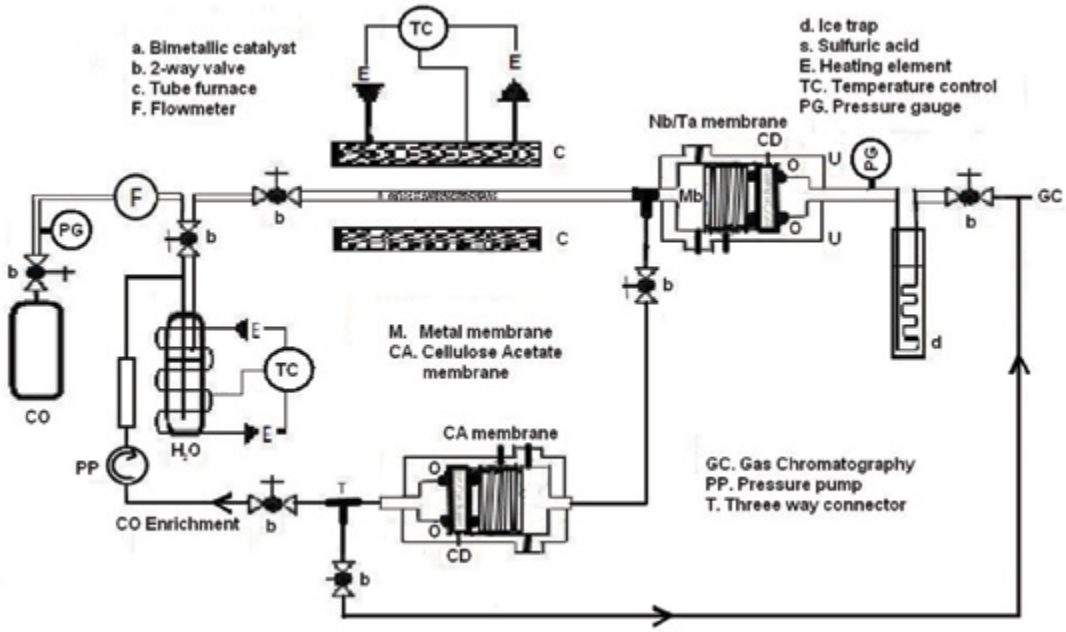

Figure 4: Block Diagram of Three-Stage Prototype Reactor/Permeability Tester

technology advantages

- Ceramic/asbestos membranes incorporating low-cost metals (Ta/Nb) could lower H_2 production costs.
- Cellulose acetate membranes system may be used for CO_2 separation.

R&D challenges

- Lower Ta/Nb H_2 separation efficiencies.
- The WGS reaction time is longer than desired.

results to date/accomplishments

- Prepared the bimetallic Ni/Cu nanoparticles/sol-gel supported Ce promoted catalysts.
- Fabricated Ta/Nb-ceramic and asbestos membranes and studied for H_2 separation.
- Fabricated cellulose acetate-ceramic membranes and studied CO_2 separation.
- In Cu-Ni-Ce/alumina category, Cu(0%)Ni(10%)Ce(11%) was found to be the best WGS catalyst among six LTS catalysts with optimum temperatures between 200 to 300°C, while Ni(5%)Cu(5%)Ce(11%) was found to be the best among four HTS catalysts with optimum temperature between 350 to 400°C.
- In the Fe-Ni-Ce/alumina category catalysts, Fe(8%)Ni(0%)Ce(8%)/alumina and Fe(6%)Ni(2%)Ce(8%)/alumina catalysts showed optimum WGS reaction temperature below 150°C. All Ni(8-x%)Fe(x%)Ce(8%) had lower WGS reaction efficiencies compared to Ni(8-x%)Cu(x%)Ce(8%).
- Nb films showed a higher hydrogen permeability than Ta at a given disk porosity. The aluminothermically deposited membranes have higher H_2 permeability compared to the sputtered films, and Nb-film coated disks showed lower H_2 permeability than Ta-film.
- The CO_2 permeability has decreased faster than CO permeability with the CA/TEC membrane thickness, and findings support that the CA membrane could be used to entrap CO_2.

next steps

This project ended on June 30, 2011.

available reports/technical papers/presentations

"Materials Research and Research Capabilities at Grambling," Presented at Glenn Research Center, Cleveland, Ohio, March 7, 2011.

Kudale1, T. V., Siriwardane, U., Seetala, N. V., Bhandari, R., "Development of Ta, Nb & Cellulose Acetate for $H_2/CO/CO_2$ Separation in WGS Reactors," American Chemical Society Joint SE/SW Regional Meeting, New Orleans, Nov. 30-Dec. 4, 2010.

Seetala, N.; Siriwardane, U.; Jayasingha, R.; and Bass, J., "Nb/Ta Thin Film Coated Micro-Porous Alumina Membranes for Hydrogen Separation from WGS Reaction Products," World Journal of Engineering, Vol. 7 (No. 3), pp 62-66, 2010.

Seetala, N.; Siriwardane, U.; and Kudale, T., "Water gas shift reaction nano-catalysts for hydrogen production; and metal/ceramic and polymer membranes for $H_2/CO/CO_2$ gas separation," Presented at the International Conference on Green Chemistry and Sustainable Environment, 7-8, July 2010, Tiruchirappalli, India. Published in the GCASE-2010 International Conference Proceedings.

Seetala, N.; Siriwardane, U.; Forester, R.; and Talathi, R., "Nanoparticle metal oxide (MgO, CaO, and ZnO) heterogeneous catalysts for biodiesel production," International Conference on Green Chemistry and Sustainable Environment, 7-8, July 2010, Tiruchirappalli, India.

Seetala, N.; Bhandaria, R.; Kudaleb, T.; and Siriwardane, U., "Positron lifetime/free volume and gas diffusion studies of cellulose acetate membranes with triethyl citrate as plasticizer for drug delivery systems," International Conference - Bangalore India Bio 2010, June 2-4, 2010.

Seetala, N.; Siriwardane, U.; Jayasingha, R.; and Bass, J., "Nb/Ta Thin Film Coated Micro-Porous Alumina Membranes for Hydrogen Separation from WGS Reaction Products," World Journal of Engineering, Vol. 7 (No. 3), pp 62-66, 2010.

Seetala, N.; Siriwardane, U.; Kudal, T.; Foreste, R.; and Pokhare, A., "Development of Metal (Ta, Nb)/Ceramic and Cellulose Acetate Membranes for Cu-Ni-Ce/Alumina WGS Catalytic Reactor," ACS Fuel Chemistry Division Preprints 2010.

Kudale, T.V.; Seetala, N.V.; and Siriwardane, U., "Fabrication of cellulose acetate membranes (CA) and their $CO/CO_2/H_2$ permeabilities," Louisiana Academy of Sciences Meeting, Alexandria, LA, Feb. 2010

Forester, R.; Brown, S.; Siriwardane, U.; and Seetala, N.V., "Preparation and characterization of nanoparticle metal oxide (MgO, CaO, and ZnO) heterogeneous catalysts for biodiesel production," Louisiana Academy of Sciences Meeting, Alexandria, LA, Feb. 2010

"Development of Low Cost Membranes for H_2/CO_2 Separation for WGS Reactors," University Coal Research/Contractors Review Conference, Morgan Town, June 2009.

Seetala, N.; Siriwardane, U.; Garudadri, R.; and Bass, J., "Sol-gel Synthesis, Characterization and Activities of Alumina Supported Nanoparticle Cuo-Nio-CeO_2 Catalysts for Water-Gas-Shift (WGS) Raction," Presented at International Conference on Nano-Composites Engineering (ICCE-17), Honolulu, Hawaii, July 26-Aug. 1, 2009; World Journal of Engineering, Vol. 6, Supplement 2009, pp-903-906.

Seetala, N.V., "Bimetallic Nanocatalysts for Water-Gas-Shift Reaction," Presented at Inorganic Chemistry Seminar, Louisiana State University-Baton Rouge, LA, Feb. 10, 2009.

Seetala, N.V.; Bass, J.; Jayasingha, A.M.R.; Garudadri, R.; and Siriwardane, U., "Sol-gel Prepared Cu-Ce-Ni Nanoparticle Alumina Catalysts for WGS Hydrogen Production," Microscopy & Microanalysis, Vol. 14, Suppl. 2, (2008) 308.

Zhao, S., Nagineni, V.S., Seetala, N.V., and Kuila, D., "Microreactors for Syngas Conversion to Higher Alkanes: Effect of Ruthenium on Silica-Supported Iron-Cobalt Nanocatalysts," Ind. Eng. Chem. Res., 47 (2008) 1684.

"Development of Low Cost Membranes for H_2/CO_2 Separation for WGS Reactors," University Coal Research/Contractors Review Conference, Pittsburgh, June 10-11, 2008.

Garudadri, R. S.; Jayasingha, R.A.M.; Seethala, N.V.; and Siriwardane, U., "Sol-gel synthesis and characterization of alumina supported Cu-Ni-Ce catalysts for water-gas-shift (WGS) reaction," 235th ACS National Meeting, New Orleans, LA, April 6-10, 2008.

Jayasingha, R.A.M.; Garudadri, R.S.; Seethala, N.V.; and Siriwardane, U., "Preparation and characterization of alumina porous membranes coated with Nb/Ta thin films for the separation of $H_2/CO_2/CO$," 235th ACS National Meeting, New Orleans, LA, April 6-10, 2008.

"Microreactors for Syngas Conversion to Higher Alkanes: Effect of Ruthenium on Silica-Supported Iron-Cobalt Nanocatalysts," Ind. Eng. Chem. Res., 47 (2008) 1684.

Bass, J.; Seetala, N.V.; Jayasingha, A.M.R.; Garudadri, R.K.; and Siriwardane, U., "Preparation and characterization of sol-gel alumina supported bimetallic nanocatalysts for WGS reaction," Louisiana Academy of Sciences Meeting, Northwestern State University, Natchitoches, Louisiana, March 14, 2008.

"Development of Low Cost Membranes for H_2/CO_2 Separation for WGS Reactors," University Coal Research/HBCU-MI Contractors Review Conference, Pittsburgh June 5-7, 2007.

HIGH PERMEABILITY TERNARY PALLADIUM ALLOY MEMBRANES WITH IMPROVED SULFIDE AND HALIDE TOLERANCE

primary project goals

Southwest Research Institute (SwRI) set out to employ an iterative modeling, rapid fabrication, and testing approach to develop and demonstrate an ultra-thin (<5 micron), durable ternary palladium (Pd)-alloy membrane with excellent resistance to sulfur and halogen attacks while meeting or exceeding the hydrogen (H_2) permeability performance established by the U.S. Department of Energy (DOE). A secondary benefit was to support the process of carbon dioxide (CO_2) gas sequestration.

technical goals

- Investigate the performance of a variety of ternary Pd-copper (Cu)-metal alloys to identify which experimental alloys show improved H_2 permeance compared to a baseline Pd alloy.
- Develop the necessary methods for the fabrication of high-performance, thin Pd-alloy membranes using advanced physical vapor deposition methods.
- Experimentally determine the H_2 and nitrogen (N_2) permeation rates of the alloys under a range of pressures, 1.3 to 11 atm (5 to 150 pounds per square inch gauge [psig] feed pressure), and temperatures (200 to 500°C).
- Characterize the alloy membranes using binary mixture permeation tests, electron microscopy (to observe structure and morphology), X-ray diffraction (for purity of the film and crystal structure), atomic force microscopy (for surface structure), and energy-dispersive X-ray spectroscopy (for alloy composition).
- Test the performance of the alloy membranes in the presence of a single- and multi-contaminant synthesis gas (syngas).

technical content

The project team consisting of SwRI, the Georgia Institute of Technology (GT), the Colorado School of Mines (CSM), TDA Research, and IdaTech LLC was focused on developing a robust, poison-tolerant, hydrogen-selective freestanding membrane to produce clean hydrogen. The project was completed on schedule and on budget, with SwRI, GT, CSM, TDA, and IdaTech all operating independently and concurrently.

GT developed a robust platform for performing extensive Density Functional Theory (DFT) calculations for H in the bulk of Pd, binary alloys, and ternary alloys of Pd. In GT's work, the idea of describing the binding sites with a series of well-defined geometric configurations via a cluster expansion (CE) method was introduced. In order to select the best CE model, the Leave One Out (LOO) analysis was introduced. With the CE-LOO analysis, the DFT data sets were taken and models were developed that could accurately define the binding sites; these models were then used in subsequent analysis of the solubility and diffusion of H in the bulk of the ternary alloys.

technology maturity:

Bench-Scale

project focus:

Ternary Palladium Alloy Membranes

participant:

Southwest Research Institute

project number:

FC26-07NT43056

NETL project manager:

Richard Dunst
richard.dunst@netl.doe.gov

principal investigator:

Kent Coulter
Southwest Research Institute
kent.coulter@swri.org

partners:

Colorado School of Mines
The Georgia Institute of Technology
IdaTech
TDA Research

performance period:

5/2/07 – 12/31/10

SwRI deposited and released more than 160 foils of binary and ternary Pd alloys. There was considerable work on characterizing and improving the durability of the deposited foils using new alloy compositions, post annealing, and ion bombardment. The 10- and 25-µm thick films were sent to CSM, TDA, and IdaTech for characterization and permeation testing.

CSM conducted more than 60 pure gas permeation tests with binary and ternary alloy membranes. The Pd-gold (Au) and PdAu-platinum (Pt) membranes exhibited the best performance at temperatures in the range of 423 to 773°C, and their performance correlates well with the predictions from GT.

TDA completed testing under the DOE testing guidelines on more than 16 membranes; of particular interest were the PdAuPt alloys that exhibited only a 20 percent drop in flux when sulfur was added to the gas mixture, with the flux completely recovered when the sulfur flow was stopped.

IdaTech tested binary and ternary membranes on simulated flue gas streams and experienced significant difficulty in mounting and testing the sputter deposited membranes. IdaTech was able to successfully test PdAu and PdAuPt membranes and saw similar sulfur tolerance to what TDA found.

TABLE 1: SWRI MEMBRANE PARAMETERS

	Units	Current R&D Value	Target R&D Value
Materials Properties			
Materials of Fabrication for Selective Layer		Pd Ternary Alloys	
Materials of Fabrication for Support Layer		N/A	
Nominal Thickness of Selective Layer	µm		
Membrane Geometry		Plate & frame	Plate & frame
Maximum Trans-Membrane Pressure	bar		
Hours Tested Without Significant Degradation		24	120
Manufacturing Cost for Membrane Material	$/m^2		
Membrane Performance			
Temperature	°C	400	300 – 600
H_2 Pressure Normalized Flux	GPU or equivalent		
H_2/H_2O Selectivity	-		
H_2/CO_2 Selectivity	-		
H_2/H_2S Selectivity	-		
Sulfur Tolerance	ppm		
Type of Measurement	-		
Proposed Module Design			
Flow Arrangement	-		
Packing Density	m^2/m^3	N/A	
Shell-Side Fluid	-		
Syngas Gas Flowrate	kg/hr		
CO_2 Recovery, Purity, and Pressure	% / % / bar	N/A	
H_2 Recovery, Purity, and Pressure	% / % / bar	N/A	
Pressure Drops Shell/Tube Side	bar	4.8	
Estimated Module Cost of Manufacturing and Installation	$ / kg/hr	16,146/m^2	10,754/m^2

Definitions:

Membrane Geometry – Flat discs or sheets, hollow fibers, tubes, etc.

Pressure Normalized Flux – For materials that display a linear dependence of flux on partial pressure differential, this is equivalent to the membrane's permeance.

GPU – Gas Permeation Unit, which is equivalent to 10^{-6} cm^3 (1 atm, 0°C)/cm^2/s/cm Hg. For non-linear materials, the dimensional units reported should be based on flux measured in cm^3 (1 atm, 0°C)/cm^2/s with pressures measured in cm Hg. Note: 1 GPU = 3.3464×10^{-6} kg mol/m^2-s-kPa [SI units].

Type of Measurement – Either mixed or pure gas measurements; projected permeance and selectivities should be for mixture of gases found in pre-conditioned syngas.

Flow Arrangement – Typical gas-separation module designs include spiral-wound sheets, hollow-fiber bundles, shell-and-tube, and plate-and-frame, which result in either co-current, counter-current, cross-flow arrangements, or some complex combination of these.

Packing Density – Ratio of the active surface area of the membrane to the volume of the module.

Shell-Side Fluid – Either the permeate (H_2-rich) or retentate (syngas) stream.

Estimated Cost – Basis is kg/hr of CO_2 in CO_2-rich product gas; assuming targets are met.

technology advantages

GT developed a detailed DFT and a heuristic lattice model that is appropriate for rapidly characterizing H solubility and diffusion in the search for new promising alloys for membranes. This approach can be used as an initial tool for screening materials prior to using more expensive experimental investigations. The advanced vapor deposition methods used to construct the Pd-alloy membranes provide unique advantages compared to other membrane fabrication techniques. The high-power, pulsed magnetron sputtering and plasma-enhanced magnetron deposition methods are able to rapidly produce membranes of almost any alloy composition, providing excellent flexibility in terms of the materials and properties used in a membrane. These methods also generate alloy compositions with good uniformity over areas up to 645 cm^2 (100 in2).

R&D challenges

The mechanical durability of membranes fabricated using magnetron sputtering are inferior compared to cold rolled membranes, and is currently not ready for industrial environments.

results to date/accomplishments

- Developed a rigorous strategy for predicting H_2 permeability through ternary alloys using complex calculations.
- Coated more than 160 thin (5 to 25 micron) membranes of PdCu, PdAg, Pd-ruthenium (Ru), PdAu, Pd-thulium (Tm), PdCu-silver (Ag), PdCuAu, PdCuPt, PdCu-nickel (Ni), PdCuRu, PdCuAu, PdAuAg, and PdAuPt for structural and composition measurements and permeation testing.
- Determined pure gas H_2 and N_2 permeation rates for a range of pressure differentials (1.3 to 11 atm feed pressure [5 to 150 psig]) and temperatures ranging from 200 to 500°C for more than 60 membranes.
- Under DOE-specified test conditions, evaluated 16 membranes.
- More than 10 presentations at national and international conferences were made, four papers were published in technical journals, and three students completed their Ph.D. using results generated during the course of the program.

- The three major findings of program were: (1) the DFT modeling was verified as a predictive tool for the permeability of Pd-based ternary alloys; (2) while magnetron sputtering is useful in precisely fabricating binary and ternary alloys, the mechanical durability of membranes fabricated using this technique are inferior compared to cold rolled membranes and sputtered membranes are not currently ready for industrial environments; and (3) based on both modeling and experimental verification in pure gas and mixed gas environments, PdAu and PdAuPt alloys were found to have the combination of the highest permeability and tolerance to sulfur.
- The program met all the deliverables on schedule and on budget.

next steps

The project ended on December 31, 2010.

available reports/technical papers/presentations

K. E. Coulter, J. D. Way, S. K. Gade, S. Chaudhari, G. O. Alptekin, S. J. DeVoss, S. N. Paglieri, and B. Pledger, (2012) Sulfur tolerant PdAu and PdAuPt alloy hydrogen separation membranes, J. Membr. Sci., 405, 11.

S. K. Gade, S. J. Devose, K. E. Coulter, S. N. Paglieri, G. O. Alptekin, and J. D. Way, (2011) Palladium-gold membranes in mixed gas streams with hydrogen sulfide: Effect of alloy content and fabrication technique, J. Membr. Sci., 378, 35.

K. E. Coulter, J. D. Way, S. K. Gade, S. Chaudhari, D.S. Sholl, and L. Semidey-Flecha, (2010) Predicting, Fabricating, and Permeability Testing of Free-Standing Ternary Palladium−Copper−Gold Membranes for Hydrogen Separation, J. Phys. Chem. C, 114, 40, 17173.

S. K. Gade, K. E. Coulter, and J. D. Way, (2010) Effects of fabrication technique upon material properties and permeation characteristics of palladium-gold alloy membranes for hydrogen separations, Gold Bulletin, 43, 4 287.

Influence of Pt Addition on the Performance of Pd-Au Hydrogen Separation Membranes, AIChE Fall Annual Meeting, Minneapolis, MN, October 18, 2011.

High Permeability Ternary Palladium Alloy Membranes with Improved Sulfur and Halide Tolerances, 139th Annual Meeting, TMS, Seattle, WA, February 16, 2010.

High Permeability Ternary Palladium Alloy Membranes with Improved Sulfur and Halide Tolerance, 10th International Conference on Inorganic Membranes, Tokyo, Japan, August 21, 2008.

EXPERIMENTAL DEMONSTRATION OF ADVANCED PALLADIUM MEMBRANE SEPARATORS FOR CENTRAL HIGH-PURITY HYDROGEN PRODUCTION

primary project goals

United Technologies Research Center (UTRC) set out to develop a palladium-copper (PdCu) trimetallic alloy hydrogen (H_2) separator for central H_2 production from coal gasification-derived synthesis gas (syngas).

technical goals

- Test the high stability and resistance of a PdCu trimetallic alloy to carbon and carbide formation, sulfur, halides, and ammonia (NH_3).
- Develop a sulfur-, halide-, and NH_3-resistant alloy membrane with a projected H_2 permeance of 25 m^3m 2atm $0.5h^{-1}$ at 400°C and capable of operating at pressures of 120 atm (12.1 MPa).
- Construct and experimentally validate the performance of PdCu trimetallic alloy membranes operating at a H_2 separation rate of 0.1 kg/day at feed pressures of 20 atm (2 MPa) in the presence of hydrogen sulfide (H_2S), NH_3, and hydrogen chloride (HCl). The performance of the best separator candidate will be demonstrated for a minimum of 2,000 hours of operation.

technical content

Figure 1 depicts one of the membrane separators developed for this project. The purpose of the separators is to house the membrane and receive the flue gas stream from combustion. The membrane allows the H_2 to pass through it, following the H_2 permeate path in the diagram. The remaining gas stream then exits the membrane system for further processing.

Figure 2 illustrates the path of the gas stream through the separation mechanism's structure. The gas stream enters through the PdCu alloy pipes, which allow the H_2 present in the gas stream to permeate through the alloy walls into the secondary level of the structure (shown as the white area within the blue outer-shell), while containing the remaining gases (carbon monoxide [CO], carbon dioxide [CO_2], water [H_2O], and nitrogen [N_2]). The H_2 and other gases can then be separately processed once they exit the separator mechanism.

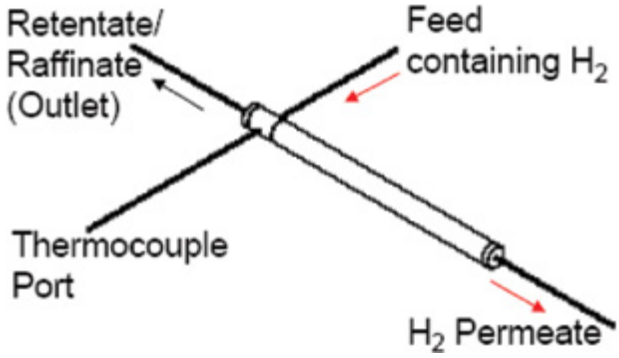

Figure 1: Tubular Membrane Separator

technology maturity:

Bench-Scale, Using Simulated Syngas

project focus:

Palladium-Copper Trimetallic Alloy

participant:

United Technologies Research Center

project number:

FC26-07NT43055

NETL project manager:

Jason Hissam
jason.hissam@netl.doe.gov

principal investigator:

Sean Emerson
United Technologies Research Center
emersonsc@utrc.utc.com

partners:

Metal Hydride Technologies, Inc.
Pall Corporation
Power & Energy, Inc.

performance period:

6/15/07 – 6/30/10

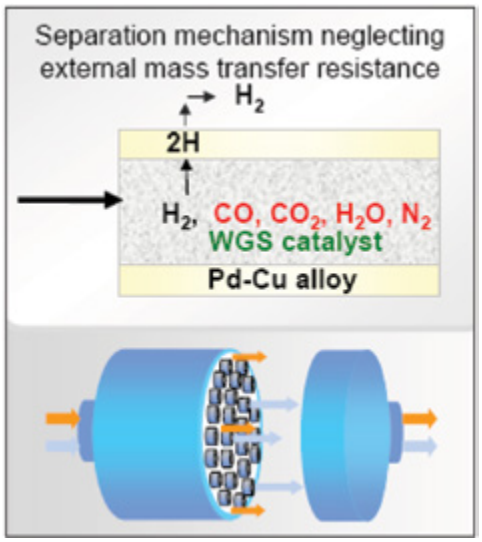

Figure 2: Configuration of Larger Assembly

TABLE 1: UTRC MEMBRANE PARAMETERS

	Units	Current R&D Value	Target R&D Value
Materials Properties			
Materials of Fabrication for Selective Layer		Pd, Cu	
Materials of Fabrication for Support Layer		N/A	
Nominal Thickness of Selective Layer	µm		
Membrane Geometry		Shell & tube	Shell & tube
Maximum Trans-Membrane Pressure	bar		
Hours Tested Without Significant Degradation		527	527
Manufacturing Cost for Membrane Material	$/m^2		
Membrane Performance			
Temperature	°C	350 – 600	300 – 600
H_2 Pressure Normalized Flux	GPU or equivalent	125 $ft^3ft^2h^{-1}$	200 $ft^3ft^2h^{-1}$
H_2/H_2O Selectivity	-	999,999	
H_2/CO_2 Selectivity	-	999,999	
H_2/H_2S Selectivity	-	999,999	
Sulfur Tolerance	ppm	78	20
Type of Measurement	-	Mixed	
Proposed Module Design			
Flow Arrangement	-	Shell & tube	
Packing Density	m^2/m^3	157	
Shell-Side Fluid	-	Pure H_2	
Syngas Gas Flowrate	kg/hr		
CO_2 Recovery, Purity, and Pressure	% / % / bar		
H_2 Recovery, Purity, and Pressure	% / % / bar		
Pressure Drops Shell/Tube Side	bar		
Estimated Module Cost of Manufacturing and Installation	$\frac{\$}{kg/hr}$		

Definitions:

Membrane Geometry – Flat discs or sheets, hollow fibers, tubes, etc.

Pressure Normalized Flux – For materials that display a linear dependence of flux on partial pressure differential, this is equivalent to the membrane's permeance.

GPU – Gas Permeation Unit, which is equivalent to 10^{-6} cm^3 (1 atm, 0°C)/cm^2/s/cm Hg. For non-linear materials, the dimensional units reported should be based on flux measured in cm^3 (1 atm, 0°C)/cm^2/s with pressures measured in cm Hg. Note: 1 GPU = 3.3464×10^{-6} kg mol/m^2-s-kPa [SI units].

Type of Measurement – Either mixed or pure gas measurements; projected permeance and selectivities should be for mixture of gases found in pre-conditioned syngas.

Flow Arrangement – Typical gas-separation module designs include spiral-wound sheets, hollow-fiber bundles, shell-and-tube, and plate-and-frame, which result in either co-current, counter-current, cross-flow arrangements, or some complex combination of these.

Packing Density – Ratio of the active surface area of the membrane to the volume of the module.

Shell-Side Fluid – Either the permeate (H_2-rich) or retentate (syngas) stream.

Estimated Cost – Basis is kg/hr of CO_2 in CO_2-rich product gas; assuming targets are met.

Other Parameter Descriptions:

Description of Membrane Permeation Mechanism – The transport of H_2 through the Pd alloy membrane follows Sievert's law with the rate-limiting step as H_2 diffusion through the Pd alloy. The flux through the membrane is governed by an H_2 partial pressure square root driving force dependency.

Contaminant Resistance – The reversible tolerance of PdCu alloys was demonstrated for H_2S concentrations varying from 20 parts per million by volume (ppmv) up to 487 ppmv and NH_3 concentrations up to 9 ppmv. In addition, atomistic modeling validated the resistance of PdCu alloys to carbon formation, irreversible sulfur corrosion, and chlorine attack.

technology advantages

A PdCu alloy-based CO_2 capture membrane is able to better withstand the corrosion and wear associated with membranes constructed of other materials. Less corrosion means the membrane does not need to be replaced as often, resulting in a lower overall operating cost for the power plant. The PdCu alloy also has a stronger resistance to sulfur compared to traditional membranes, resulting in an improved CO_2 capture efficiency.

R&D challenges

Tests have shown that the fcc PdCu alloy produced by Power+Energy is capable of meeting all of the program goals, except the H_2 flux target. The UTRC ternary alloy tubes were shown to have approximately twice the permeability as the fcc PdCu alloy at 400°C. The membranes go through a phase transformation from bcc to fcc at 450°C. Membrane tube defects were found to limit membrane operation to less than 220 pounds per square inch gauge (psig) to avoid leaks. Non-membrane materials of construction require further investigation, as stainless steel 316 was observed to severely corrode under some gas compositions, particularly when the alloy was exposed to high levels of H_2S (487±4 ppmv).

results to date/accomplishments

- The PdCu alloy separators were tested for their H_2 separation performance and the membranes have not yet met all of the DOE 2010 targets. The highest H_2 flux obtained in these experiments for the fcc PdCu alloy was 61.03±0.01 $ft^3h^{-1}ft^{-2}$ at a feed pressure of 7.8 atm (100 psig).
- An enhanced PdCu alloy membrane was shown to reach an H_2 flux of 125 $ft^3h^{-1}ft^{-2}$ at a feed pressure of 13.6 atm (185 psig) and a temperature of 500°C. The alloy has met the H_2 flux goal of 200 $ft^3h^{-1}ft^{-2}$.
- Tests also showed that the alloy's sulfur resistance exceeded the project's designated target of 20 ppmv.
- The membranes themselves are still costly to make compared to the desired cost of use on the commercial scale, and they still do not meet the required average lifespan of three years.
- Overall, the PdCu alloy testing has successfully met performance requirements for operating temperature (350 to 600°C), sulfur tolerance (20 ppmv), operating pressure (27 atm [400 psi] max), CO tolerance, and the production of at least 99.5 percent pure H_2.
- The project highlighted two key issues that must be addressed as part of future experimental programs: membrane tube defects and non-membrane materials of construction.

next steps

This project ended on June 30, 2010.

available reports/technical papers/presentations

She, Y.; Emerson, S.C.; Magdefrau, N.J.; Opalka, S.M.; Thibaud-Erkey, C.; Vanderspurt, T.H., "Hydrogen Permeability of Sulfur Tolerant Pd-Cu Alloy Membranes." Journal of Membrane Science, (submitted for publication).

Emerson, S.C.; Magdefrau, N.J.; She, Y.; Thibaud-Erkey, C., "Advanced Palladium Membrane Scale-up for Hydrogen Separation," DOE Award Number DE–FE0004967 Final Report. 2013, United Technologies Research Center: East Hartford, CT.

Opalka, S.M.; Løvvik, O.M.; She, Y.; Emerson, S.C., "Reversibility of sulfur interactions with Pd Alloys," presented at 242nd ACS National Meeting. 2011: Denver, CO.

She, Y.; Thibaud-Erkey, C.; Opalka, S.M.; Magdefrau, N.J.; Emerson, S.C., "Hydrogen Permeability of Sulfur Tolerant PdCu Alloy Membranes," presented at 242nd ACS National Meeting. 2011: Denver, CO.

Opalka, S.M.; Løvvik, O.M.; Emerson, S.C.; She, Y.; Vanderspurt, T.H., Electronic origins for sulfur interactions with palladium alloys for hydrogen-selective membranes. Journal of Membrane Science, 2011. 375(1-2): p. 96-103.

Emerson, S.; Costello, J.; Dardas, Z.; Janowsky, G.; Hebert, R.; Magdefrau, N.; She, Y.; Thibaud-Erkey, C.; and Wittenzellner, J., "Advanced Palladium Membrane Scale-up for Hydrogen Separation," presented at 2011 DOE Annual Merit Review, Arlington, VA, May 13, 2011. *http://www.hydrogen.energy.gov/pdfs/review11/pd011_emerson_2011_o.pdf*.

Emerson, S.C.; Magdefrau, N.J.; Opalka, S.M.; She, Y.; Thibaud-Erkey, C.; Vanderspurt, T.H.; and Willigan, R.R., "Experimental Demonstration of Advanced Palladium Membrane Separators for Central High Purity Hydrogen Production," DOE Award Number DE-FC26-07NT43055 Final Report. 2010, United Technologies Research Center: East Hartford, CT. *http://www.osti.gov/bridge/purl.cover.jsp?purl=/1000469-aytn0s/1000469.pdf*.

Emerson, S.C., "Advanced Palladium Membrane Scale-up for Hydrogen Separation," Presented in Advancing the Hydrogen Economy Action Summit III. 2010, University of North Dakota EERC's National Center for Hydrogen Technology: Grand Forks, ND.

Emerson, S.; Dardas, Z.; Goberman, D.; Hale, T.; Hebert, R.; Marigliani, G.; Opalka, S.; She, Y.; Thibaud-Erkey, C.; Vanderspurt, T.H.; and Willigan, R., "Experimental Demonstration of Advanced Palladium Membrane Separators for Central High-Purity Hydrogen Production," presented at 2010 DOE Annual Merit Review, Washington, DC, June 2010. *http://www.hydrogen.energy.gov/pdfs/review10/pd011_emerson_2010_o_web.pdf*.

Opalka, S.M.; Vanderspurt, T.H.; Emerson, S.C.; Huang, W.; Wang, D.; Flanagan, T.; and She, Y., "Modeling of B_2 Phase Pd-CuTM Alloy Hydrogen Selective Membrane Performance," presented at 2008 TMS Annual Meeting, New Orleans, LA, March 2008.

Opalka, S.M.; Huang, W.; Wang, D.; Flanagan, T.B.; Løvvik, O.M.; Emerson, S.C.; She, Y.; and Vanderspurt, T.H., "Hydrogen interactions with the PdCu ordered B_2 alloy," J. Alloys Compd., 2007, 446-447, 583. doi: 2007.01.130.

Huang, W.; Opalka, S.M.; Wang, D.; and Flanagan, T.B.; "Thermodynamic Modeling of the Cu-Pd-H system," CALPHAD, 2007, 31, 3. doi: 2007.02.002.

Opalka, S.M.; Benn, R.C.; Emerson, S.C.; Flanagan, T.B.; Huang, W.; She, Y.; Wang, D.; and Vanderspurt, T.H., "Modeling of a stable, high permeability, sulfur resistant B_2 phase PdCuTM alloy," presented at the 234th ACS National Meeting, Boston, MA, August 2007.

Opalka, S.M.; Huang, W.; Wang, D.; Flanagan, T.B.; Løvvik, O.M., Emerson, S.C.; She, Y.; and Vanderspurt, T.H., "PdCu B_2 Hydrogen Interactions under Advanced Water Gas Shift Membrane Reactor Conditions," presented at the 20th North American Catalysis Society Meeting, Houston, TX, June 2007.

Løvvik, O.M.; Opalka, S.M.; "Modeling the effect of adsorbates on the surface segregation of binary alloy surfaces," presented at the American Physical Society Annual Meeting, Denver, CO, March 2007.

Opalka, S.M.; Huang, W.; Løvvik, O.M.; Wang, D.; Flanagan, T.B.; Emerson, S.C.; She, Y.; and Vanderspurt, T.H., "Hydrogen interactions with the ordered BCC PdCu alloy," presented at International Symposium on Metal-Hydrogen Systems, Lahaina, HI, October 2006.

HIGH FLUX METALLIC MEMBRANES FOR HYDROGEN RECOVERY AND MEMBRANE REACTORS

primary project goals

REB Research & Consulting set out to develop a carbon dioxide (CO_2)/hydrogen (H_2) separation membrane that utilizes a base metal in place of more expensive palladium (Pd).

technical goals

- Fabricate metallic alloys for coupon testing to determine permeation and inter-diffusion properties along with material embrittlement.
- Conduct more thorough evaluation of the most promising membranes in harsher conditions, and evaluate drawability, cladability, and brazability.
- Fabricate an H_2 purifier and membrane reactor units, and perform H_2 permeation, shock resistance, and longevity tests on modules under simulated operating conditions.

technical content

The project set out to investigate a more economic metal to replace Pd for use in an H_2 membrane, with a focus on B_2 alloys. These are similar to the BI alloys (also known as BCC) metals of the 4B and 5B element region (columns) on the periodic table – metals like vanadium (V), niobium (Nb), and tantalum (Ta) that are reasonably good at H_2 purification. These metals have a high H_2 sorption, high H_2 diffusivity, and are flexible enough for membrane fabrication; however, even when alloyed with a moderator, they tend to embrittle. Further, in the B1 form, stress creep and Pd-substrate interdiffusion are a problem. B_2 (CP2) metals have similar structure and properties to the B1 metals, but should be much more resistant to creep and interdiffusion. Several membranes of the B_2 structure have been developed and tested, and so far as predicted, they have passed H_2 and have been durable. Figure 1 depicts the membrane structure. The B_2 intermetallic alloy substrate is coated with a thin layer of Pd alloy for catalytic activity and oxidation protection. These improved membranes so far have been hard to fabricate as tubes.

Figure 2 displays the disc configuration that has been developed for use with B_2 membrane materials and Figure 3 displays how the B_2 alloy discs (H_2 permeation discs) will be assembled into a purifier or membrane reactor.

technology maturity:

Pilot-Scale, 8 tonnes CO_2/day

project focus:

High Flux Metallic Membranes and Reactors

participant:

REB Research & Consulting

project number:

FC26-05NT42400

NETL project manager:

Richard J. Dunst
richard.dunst@netl.doe.gov

principal investigator:

Robert Buxbaum
REB Research & Consulting
buxbaum@rebresearch.com

partners:

G&S Titanium Co.
Iowa State University, Ames Lab
Los Alamos National Laboratory (LANL)
Western Research Institute (WRI)

performance period:

10/1/05 – 6/30/10

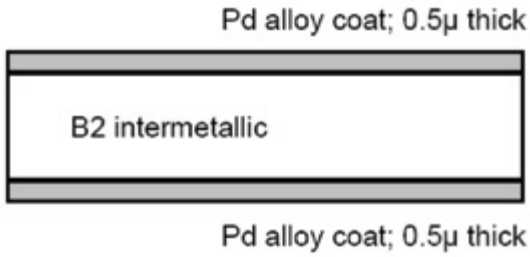

Figure 1: Typical B_2 Allot Coated with Pd-Alloy

Figure 2: Hydrogen Permeation Disk

A version of this reactor/separator has been tested using a coal gasifier slipstream at the Western Research Institute at Laramie, Wyoming. A device with one catalytic doughnut and two membrane discs produced 2.28 standard cubic feet per hour (scfh) of pure H_2 from a 90 pound per square inch (psi) slip-stream at 400°C. The total membrane surface area was 0.947 ft^2 and the coal gas had a dry composition of 37% H_2, 27% carbon monoxide (CO), 30% CO_2, 3% methane (CH_4), and 100 parts per million (ppm) hydrogen sulfide (H_2S) (2.41 scfh/ft^2). There was excess steam in the gas. Calculations suggest that a scaled-up version of this purifier should allow economical H_2 from coal-gas, where the H_2 permeates through the metal and leaves behind a high-pressure CO_2-rich stream. The high-pressure, CO_2-rich gas stream is sequestration-ready.

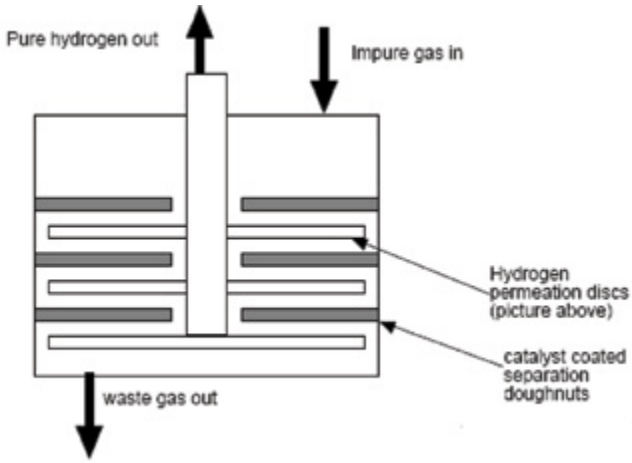

Figure 3: Membrane Reactor Design

TABLE 1: REB RESEARCH MEMBRANE PARAMETERS

	Units	Current R&D Value	Target R&D Value
Materials Properties			
Materials of Fabrication for Selective Layer		B_2 Alloys	
Materials of Fabrication for Support Layer		N/A	
Nominal Thickness of Selective Layer	μm		
Membrane Geometry		Disc & doughnut	Disc & doughnut
Maximum Trans-Membrane Pressure	bar		
Hours Tested Without Significant Degradation		75	200
Manufacturing Cost for Membrane Material	$/$m^2$		
Membrane Performance			
Temperature	°C	350-400	350-400
H_2 Pressure Normalized Flux	GPU or equivalent		
H_2/H_2O Selectivity	-		
H_2/CO_2 Selectivity	-		
H_2/H_2S Selectivity	-		

TABLE 1: REB RESEARCH MEMBRANE PARAMETERS

	Units	Current R&D Value	Target R&D Value
Sulfur Tolerance	ppm		
Type of Measurement	-		
Proposed Module Design			
Flow Arrangement	-		
Packing Density	m^2/m^3	135	
Shell-Side Fluid	-		
Syngas Gas Flowrate	kg/hr		
CO_2 Recovery, Purity, and Pressure	% / % / bar		
H_2 Recovery, Purity, and Pressure	% / % / bar		
Pressure Drops Shell/Tube Side	bar		
Estimated Module Cost of Manufacturing and Installation	$\frac{\$}{kg/hr}$		

Definitions:

Membrane Geometry – Flat discs or sheets, hollow fibers, tubes, etc.

Pressure Normalized Flux – For materials that display a linear dependence of flux on partial pressure differential, this is equivalent to the membrane's permeance.

GPU – Gas Permeation Unit, which is equivalent to 10^{-6} cm^3 (1 atm, 0°C)/cm^2/s/cm Hg. For non-linear materials, the dimensional units reported should be based on flux measured in cm^3 (1 atm, 0°C)/cm^2/s with pressures measured in cm Hg. Note: 1 GPU = 3.3464×10^{-6} kg mol/m^2-s-kPa [SI units].

Type of Measurement – Either mixed or pure gas measurements; projected permeance and selectivities should be for mixture of gases found in pre-conditioned syngas.

Flow Arrangement – Typical gas-separation module designs include spiral-wound sheets, hollow-fiber bundles, shell-and-tube, and plate-and-frame, which result in either co-current, counter-current, cross-flow arrangements, or some complex combination of these.

Packing Density – Ratio of the active surface area of the membrane to the volume of the module.

Shell-Side Fluid – Either the permeate (H_2-rich) or retentate (syngas) stream.

Estimated Cost – Basis is kg/hr of CO_2 in CO_2-rich product gas; assuming targets are met.

Membranes, when copper (Cu)-Pd coated, resisted poisoning from 50 hours with 100 ppm H_2S; better resistance is expected with gold (Au)-Pd coated membranes. Dust from the coal-gas built up at the seals; scaled-up operation will require dust filtering. Waste gas was a high-pressure, CO_2-rich stream suitable for sequestration (or perhaps, for sale).

technology advantages

- B_2 alloys should extend the life of the separator, effectively making it cost-competitive.
- Membranes have similar selectivity and flux to Pd.
- Projected life of the material to be 15-plus years.
- Low embrittlement.
- Base metal costs \$1,080/m^2 (\$100/ft^2), while Pd costs \$32,300/m^2 (\$3,000/ft^2).

R&D challenges

There can be difficulty in fabricating membranes to the shapes and tolerances needed. More potential problems can arise, fabricating durable purifiers and membrane reactors with the new alloys (seals). Some alloys are much cheaper than Pd, but exhibit higher embrittlement.

results to date/accomplishments

- Fabricated and tested several alloy and intermetallic compositions for toughness, embrittlement, permeation, and ease of manufacture.
- Demonstrated suitable lifespan and flux in accelerated tests at target costs.
- Demonstrated acceptable brazing behavior.
- Lowered the cost/flux of H_2 permeation membranes, thus lowering the cost of H_2.
- Identified several new B_2 alloys with potential use in other applications, such as nuclear reactor fabrication.

next steps

This project ended on June 30, 2013.

available reports/technical papers/presentations

Buxbaum, R.E., "Low-cost Coal to Hydrogen for Electricity with CO_2 Sequestration," presented at Michigan Catalysis Soc, April 2009.

Paglieri, S.N.; Wermer, J.R.; Buxbaum, R.E.; Ciocco, M.V.; Howard, B.H.; and Morreale, B.D., "Development of membranes for hydrogen separation: Pd coated V-10Pd," Volume 3, Number 3, September 2008, pp. 169-176(8).

Paglieri, S.N.; Ciocco, M.V.; Buxbaum, R.E.; and Morreale, B.D., "Development of Group V Based Metal Membranes for Hydrogen Separation," AIChE meeting, November 20, 2008, Paper 701f.

Buxbaum, R.E., "High Flux Metallic Membranes for Hydrogen Recovery and Membrane Reactors," presented at 2008 Annual Merit Review, Arlington, VA, June 2008.

Buxbaum, R.E., "High Flux Metallic Membranes for Hydrogen Recovery and Membrane Reactors," presented at Sixth Annual Conference on Carbon Capture and Sequestration, Pittsburgh, Pennsylvania, May, 2007.

Paglieri, S. N., et.al, "Characterization of V-6Ni- 5Co Membranes for Hydrogen Separation." International Symposium on Metal-Hydrogen Systems (MH-2006) held October 2006, in Maui, Hawaii.

Paglieri, S. N., et.al, "Characterization of V-6Ni-5Co Membranes for Hydrogen Separation." Proceedings of the 9th Int. Conf. on Inorganic Membranes, Lillehammer, Norway, June 2006.

S. N. Paglieri, I. E. Anderson, R. L. Terpstra, T. J. Venhaus, Y. Wang, R. E. Buxbaum, K. S. Rothenberger, B. H. Howard. "Metal Membranes for Hydrogen Separation," Proc. 20th Annual Conf. Fossil Energy Mater, Knoxville, Tennessee. June 12-14, pp. 236-243, 2006.

GASIFICATION OF LIGNITES TO PRODUCE LIQUID FUELS, HYDROGEN, AND POWER

primary project goals

The University of North Dakota Energy and Environment Research Center (UNDEERC) set out to conduct research to determine the effects of lignite coal on gas cleanup processes used for coal gasification, including hydrogen (H_2)/carbon dioxide (CO_2) separation membranes, as well as the removal of condensed vapors, particulates, mercury, and sulfur.

technical goals

- Construct an entrained-flow gasifier (EFG), and perform shakedown on the EFG.
- Demonstrate the gasification lignite, and monitor the composition and concentration of synthesis gas (syngas) produced.
- Perform testing of membranes and other gas cleanup processes.

technical content

Lignite coal is an attractive fuel for gasification because of its calcium and sodium concentrations, which are known to catalyze the gasification reactions. This permits lower operating temperatures with increased carbon conversion efficiency. However, the composition of lignite, mainly sodium and chlorine, causes damaging effects to H_2/CO_2 membrane separators. Research is ongoing on the effectiveness of H_2/CO_2 membrane separators, specifically palladium (Pd)/copper (Cu) membranes, for use in lignite coal-fueled gasification processes.

The gas cleanup configuration can be found in Figure 1, where the syngas is delivered from a transport reactor development unit (TRDU). The waste gas from the separation membrane contains high concentrations of CO_2 that can be further purified and sequestered.

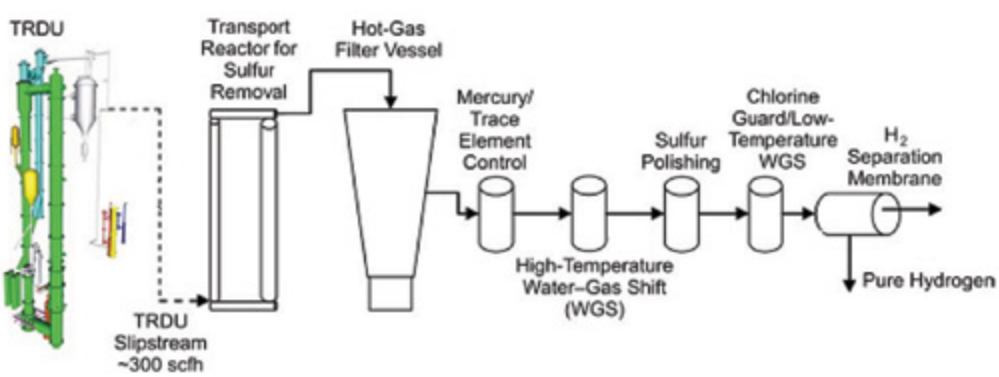

Figure 1: Gas Cleanup Configuration Schematic

technology maturity:

Bench-Scale, Using Actual Syngas

project focus:

Pilot Testing of H_2/CO_2 Separation Membranes

participant:

University of North Dakota Energy and Environmental Research Center (UNDEERC)

project number:

FC26-05NT42465-1.2

NETL project manager:

Darryl Shockley
darryl.shockley@netl.doe.gov

principal investigator:

Steve Benson, UNDEERC
sbenson@undeerc.org

partners:

EPRI
Great River Energy
Luminant
North American Coal Corporation
North Dakota Industrial Commission
Porviar Filtration Group
Rio Tinto

performance period:

6/23/05 – 5/31/10

Figure 2 is a plot of H_2 flux through the tested membrane over time. The oxygen (O_2)-blown run contained H_2 at higher partial pressures as a result of reduced nitrogen levels, which resulted in higher H_2 flux. This demonstrates that higher-pressure differentials will yield greater quantities of H_2.

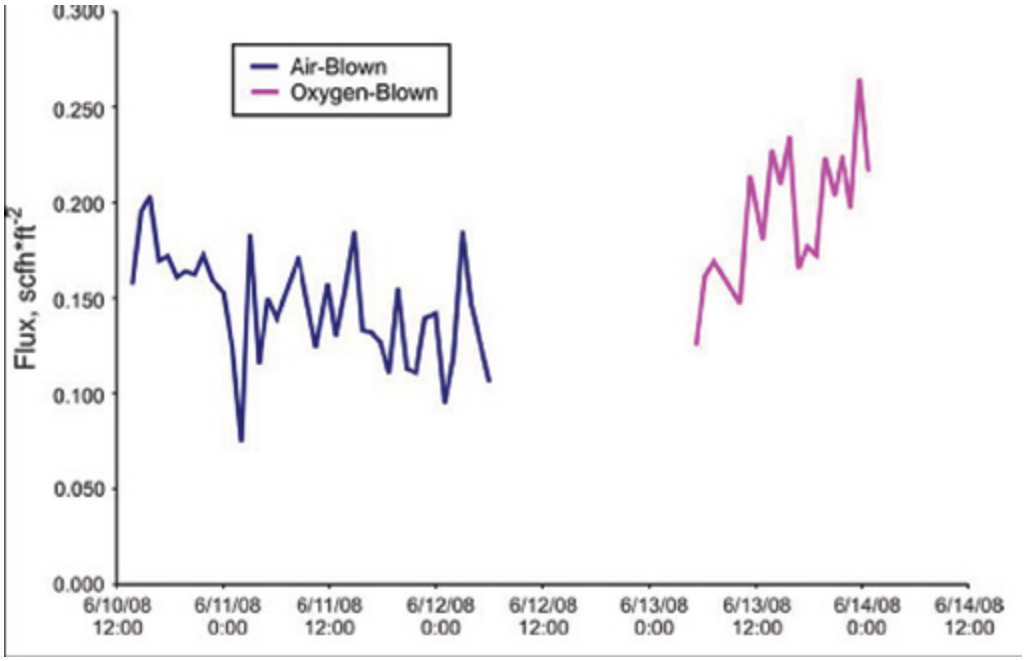

Figure 2: Hydrogen Flux of Air- and Oxygen-Blown Syngas

The permeate stream contained greater than 99.9 percent H_2, demonstrating the selectivity of the membrane and its ability to be utilized in gasification processes fueled by lignite coal.

Pd-Cu-based membranes developed by Wah-Chang and TDA Research were tested in UNDEERC's gasification facilities. Both membranes demonstrated high hydrogen purities, but flux measurements were low because of low partial pressure across the membrane.

technology advantages

- The calcium and sodium concentrations of lignite coal catalyze the gasification reaction, which permits lower operating temperatures with increased carbon conversion efficiency.
- Pd/Cu membranes produce high-purity hydrogen and a separate stream of CO_2 that remains at high pressure and is ready for sequestration.

R&D challenges

- Lignite's high calcium, sodium, mercury, and chlorine composition cause operation issues, such as bed agglomeration and ash deposition, as well as damage to water-gas shift (WGS) catalysts.
- Pd/Cu membranes have a low tolerance for sulfur, so gas cleanup systems must remove the hydrogen sulfide (H_2S) and carbonyl sulfide (COS) to subparts-per-million levels.

results to date/accomplishments

- Completed feedstock characterization.
- Completed bench-scale testing of gas desulfurization and H_2 and CO_2 purification concepts.
- Completed construction of the EFG, as well as gasification test runs on the EFG.
- Conducted testing to determine optimum warm- or hot-gas cleanup to remove impurities, such as condensed vapors and particulates, as well as control trace elements like mercury.
- Conducted testing of high-efficiency sulfur removal techniques.
- Performed testing of H_2/CO_2 separation membranes.

next steps

Project completed May 31, 2010.

available reports/technical papers/presentations

N/A.

INTEGRATION OF A STRUCTURAL WATER-GAS SHIFT (WGS) CATALYST WITH A VANADIUM ALLOY HYDROGEN (H_2) TRANSPORT DEVICE

primary project goals

Western Research Institute (WRI) set out to develop and design a membrane reactor for processing coal gasification-derived synthesis gas (syngas) that integrates water-gas shift (WGS) and hydrogen (H_2) separation functions.

technical goals

- Develop a structural WGS catalyst capable of withstanding high-pressure differentials.
- Develop vanadium alloy H_2 separation membrane.
- Integrate the WGS catalyst and metallic membranes into a device and test under simulated gasifier conditions.
- Fabricate a modular WGS/membrane-integrated device capable of producing 10,000 L H_2/day from coal-derived syngas.

technical content

WRI set out to develop a membrane reactor that promotes the reaction of carbon monoxide (CO) with water, by use of a WGS catalyst, to produce carbon dioxide (CO_2) and H_2, and then, by use of a metallic membrane, separates the H_2. Hydrogen produced can be used for electricity generation; the concentrated stream of CO_2 produced can be further purified and sequestered.

Figure 1 shows a schematic of a possible configuration for the membrane reactor. In this configuration, there are alternating stages of membrane disks and catalyst doughnuts.

By integrating the WGS and the gas separation into one unit, the WGS conversion is increased due to the continuous removal of H_2.

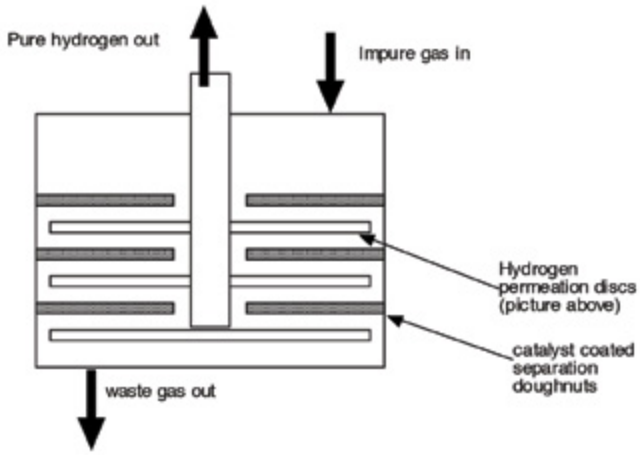

Figure 1: Schematic of Disk and Donut-Integrated Device Design

technology maturity:

Prototype, 10,000 L H_2/day

project focus:

Integrated Structural WGS Catalyst with V-Pd Alloy Membrane

participant:

Western Research Institute

project number:

FC26-05NT42454

NETL project manager:

Steven Markovich
markovis@netl.doe.gov

principal investigator:

Tom Barton
Western Research Institute
tbarton@uwyo.edu

partners:

Chart Energy and Chemicals
REB Research and Consulting
University of Wyoming
USDOE Ames Laboratory

performance period:

7/1/05 – 6/30/09

TABLE 1: WRI MEMBRANE PARAMETERS

	Units	Current R&D Value	Target R&D Value
Materials Properties			
Materials of Fabrication for Selective Layer		V-Pd	
Materials of Fabrication for Support Layer		304 SS	
Nominal Thickness of Selective Layer	µm	100	
Membrane Geometry		Plate	Plate
Maximum Trans-Membrane Pressure	bar	40	
Hours Tested Without Significant Degradation			
Manufacturing Cost for Membrane Material	$/m^2		
Membrane Performance			
Temperature	°C	400	400
H_2 Pressure Normalized Flux	GPU or equivalent	52 scfh/ft^2	52 scfh/ft^2
H_2/H_2O Selectivity	-	∞	
H_2/CO_2 Selectivity	-	∞	
H_2/H_2S Selectivity	-	∞	
Sulfur Tolerance	ppm	125	
Type of Measurement	-		
Proposed Module Design			
Flow Arrangement	-		
Packing Density	m^2/m^3	10	
Shell-Side Fluid	-		
Syngas Gas Flowrate	kg/hr		
CO_2 Recovery, Purity, and Pressure	% / % / bar		
H_2 Recovery, Purity, and Pressure	% / % / bar		
Pressure Drops Shell/Tube Side	bar		
Estimated Module Cost of Manufacturing and Installation	$ / kg/hr		

The project is completed so current and target values are identical. The membrane reactor ran at baseline flux levels for 40 hours in a coal-derived syngas mixture with 125 parts per million (ppm) hydrogen sulfide (H_2S) and 30 percent CO. Other low-level contaminants were not quantified, but were also not removed from the gas mixture.

technology advantages

Combining the WGS catalyst with the H_2-separating membrane increases production of H_2 by removing it from the reaction zone and reduces capital cost of the plant by eliminating the need for additional gas separation.

R&D challenges

Consistent production of vanadium 9 wt% palladium (Pd) alloy is difficult due to persistent cracking of the alloy during rolling.

results to date/accomplishments

The focus of the chemistry of the WGS catalyst has been on iron (Fe), aluminum (Al), chromium (Cr), copper (Cu), and cerium (Ce)-based systems, including:

- Tested catalysts by impregnation into porous mullite substrates and cordierite monoliths.
- Determined highest activity and stability for 75Fe-15Al-8Cr-2Cu.
- Identified among the Fe-Cr-Cu-Ce-oxygen (O) catalysts, those with 4 wt% ceria are the most active and stable for WGS.
- Determined that producing high-surface area monoliths of this catalyst series may be problematic due to sintering at higher operational temperatures.
- Obtained and tested multiple vanadium alloys for brazing performance with Cu.
- Developed guidelines based on the brazing tests and analysis of the literature to anticipate the performance of vanadium alloys with respect to H_2 transport and fabricability based on alloying elements.
- Determined elements that are potentially positive to both H_2 transport performance and brazing performance include Ce, Cu, Fe, manganese (Mn), molybdenum (Mo), nickel (Ni), and zinc (Zn).
- Identified alloying elements that can be sufficiently used to overcome their detrimental effect on brazing.
- Determined that brazing with vanadium and structural alloys, including mild steel, 304 stainless steel, and 9Cr 1Mo steel, were generally excellent.
- Produced an integrated WGS membrane device which produced 10,000 liters per day of H_2 under coal-derived syngas.

next steps

This project ended on June 30, 2009.

available reports/technical papers/presentations

Barton, T., and Argyle, M., "Integration of a Structural Water Gas Shift Catalyst with a Vanadium Alloy Hydrogen Transport Device." Presented at Hydrogen Fuel Cells 2007 Annual Merit Review and Peer Evaluation, May 2007, *http://www.hydrogen.energy.gov/pdfs/review07/pd_18_barton.pdf*.

Barton, T., and Argyle, M., "The Integration of a Structural Water Gas Shift Catalyst with a Vanadium Alloy Hydrogen Transport Device." Presented at Hydrogen Fuel Cells 2009 Annual Merit Review and Peer Evaluation, May 2009.

DEVELOPMENT OF PALLADIUM (Pd)-SILVER (Ag) COMPOSITE MEMBRANE FOR SEPARATION OF HYDROGEN (H_2) AT ELEVATED TEMPERATURE

technology maturity:
Laboratory-Scale

project focus:
Palladium/Silver Composite Membrane

participant:
North Carolina A&T State University

project number:
FG26-05NT42492

NETL project manager:
Arun C. Bose
arun.bose@netl.doe.gov

principal investigator:
Shamsuddin Ilias
North Carolina A&T State University
ilias@garfield.ncat.edu

partners:
N/A

performance period:
9/1/05 – 2/28/09

primary project goals

North Carolina A&T State University set out to design and develop hydrogen (H_2)-selective, palladium (Pd)-silver (Ag) composite membranes in microporous substrates for use in the production and separation of H_2 and carbon dioxide (CO_2) at elevated temperature.

technical goals

- Fabricate thin film, Pd-Ag alloy composite membranes.
- Evaluate the long-term integrity and stability of the fabricated membranes under thermal cycling.
- Optimize the electroless plating process for co-deposition of Pd-Ag in microporous stainless steel (MPSS) substrate.
- Conduct H_2 permeation studies for disc membranes.
- Fabricate a tubular diffusion cell reactor.
- Conduct H_2 permeation studies for tubular membranes.
- Conduct methanol stream-reforming experiments.

technical content

A reactor-separator is a device that utilizes a catalyst and a membrane. Incorporating a membrane in the reactor permits the removal of H_2 from the reaction zone, which increases the efficiency by allowing a greater conversion rate. Additionally, the removal of H_2 produces a waste stream with high concentrations of CO_2 for subsequent filtration and containment.

This project set out to develop a Pd-Ag alloy thin film composite membrane capable of withstanding high temperatures for use in a reactor-separator; specifically, the reforming of liquid hydrocarbons and methanol by equilibrium shift to produce H_2 for subsequent use as fuel.

Figure 1 is a diagram of a reactor-separator used to convert methanol to H_2. The methanol was fed into the reactor with steam to prevent catalyst degradation and promote additional H_2 production via a water-gas shift (WGS) reaction.

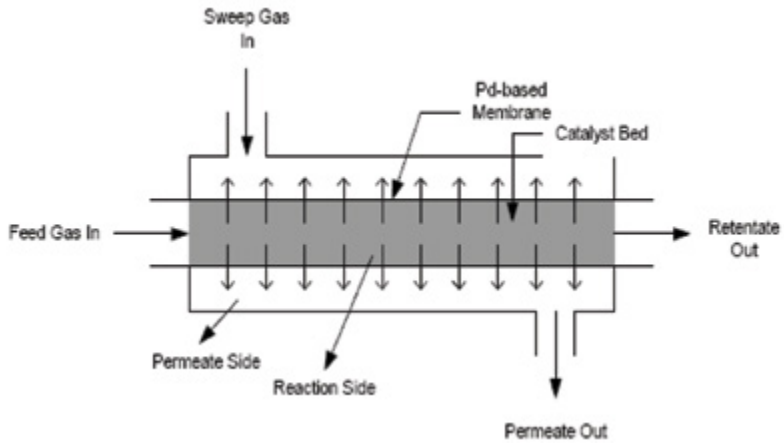

Figure 1: Schematic of Reactor Separator

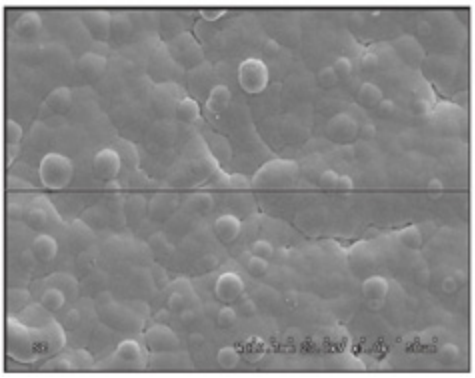

Figure 2: Image of Membrane

TABLE 1: MEMBRANE PARAMETERS

	Units	Current R&D Value	Target R&D Value
Materials Properties			
Materials of Fabrication for Selective Layer			
Materials of Fabrication for Support Layer		(if applicable)	
Nominal Thickness of Selective Layer	µm		
Membrane Geometry			
Maximum Trans-Membrane Pressure	bar		
Hours Tested Without Significant Degradation			
Manufacturing Cost for Membrane Material	$/m^2		
Membrane Performance			
Temperature	°C		
H_2 Pressure Normalized Flux	GPU or equivalent		
H_2/H_2O Selectivity	-		
H_2/CO_2 Selectivity	-		
H_2/H_2S Selectivity	-		
Sulfur Tolerance	ppm		
Type of Measurement	-		
Proposed Module Design			
Flow Arrangement	-		
Packing Density	m^2/m^3		
Shell-Side Fluid	-		
Syngas Gas Flowrate	kg/hr		
CO_2 Recovery, Purity, and Pressure	% / % / bar		
H_2 Recovery, Purity, and Pressure	% / % / bar		
Pressure Drops Shell/Tube Side	bar		
Estimated Module Cost of Manufacturing and Installation	$ / kg/hr		

Definitions:

Membrane Geometry – Flat discs or sheets, hollow fibers, tubes, etc.

Pressure Normalized Flux – For materials that display a linear dependence of flux on partial pressure differential, this is equivalent to the membrane's permeance.

GPU – Gas Permeation Unit, which is equivalent to 10^{-6} cm^3 (1 atm, 0°C)/cm^2/s/cm Hg. For non-linear materials, the dimensional units reported should be based on flux measured in cm^3 (1 atm, 0°C)/cm^2/s with pressures measured in cm Hg. Note: 1 GPU = 3.3464×10^{-6} kg mol/m^2-s-kPa [SI units].

Type of Measurement – Either mixed or pure gas measurements; projected permeance and selectivities should be for mixture of gases found in pre-conditioned syngas.

Flow Arrangement – Typical gas-separation module designs include spiral-wound sheets, hollow-fiber bundles, shell-and-tube, and plate-and-frame, which result in either co-current, counter-current, cross-flow arrangements, or some complex combination of these.

Packing Density – Ratio of the active surface area of the membrane to the volume of the module.

Shell-Side Fluid – Either the permeate (H_2-rich) or retentate (syngas) stream.

Estimated Cost – Basis is kg/hr of CO_2 in CO_2-rich product gas; assuming targets are met.

technology advantages

Inorganic membrane reactors:

- Have significantly higher H_2 flux (1.791×10^{-6} mol/[m-s-$Pa^{0.56}$]) with high selectivity (≈75%) compared to other commercially available membranes.
- Are capable of operating at high temperatures, which allows for the combining of the reaction and separation into a single step.
  - Eliminates the need for additional equipment, which reduces capital costs and lowers energy requirements.
  - Allows for the immediate removal of H_2, which shifts the equilibrium in favor of the desired conversion and consequently increases efficiency.

R&D challenges

- Developing an H_2-selective thin solid film that is thermally, chemically, and mechanically stable at high temperatures.
- Designing and fabricating effective seals at high temperature and high pressure.

results to date/accomplishments

- Installed an electroless plating bath with digital continuous monitoring of temperature.
- Fabricated Pd membranes.
- Conducted permeability measurements of H_2 through Pd membranes.
- Developed a 2-D steady-state membrane reactor-separator model to describe the reactive reforming process with effective radial concentration gradients due to H_2 permeation across the membrane cylindrical surface.
- Simultaneous production and separation of H_2 in a Pd-MPSS membrane reactor has been demonstrated using steam methanol reforming (SMR) reactions as an example.

next steps

This project ended on February 28, 2009.

available reports/technical papers/presentations

Islam, M.A.; Akanda, M.H.; and Ilias, S., "A Study on Steam Reforming of Methanol in a Pd based Membrane Reactor," Paper No. 1144, Indian Institute of Chemical Engineers (IIChE) - Chemical Engineering Congress 2007 (CHEMCON 2007), Kolkata, India (December 27-30, 2007): Conference Proceedings in CHEMCON 2007 CD, Paper No. 1144, pp 1-6 (2007).

Islam, M.A.; Akanda, M.H.; and Ilias, S., "A Study On Steam Reforming Of Methanol In A Pd-Based Membrane Reactor Fabricated By Surfactant Induced Electroless Plating," Paper No. 361f, 2007 AIChE Annual Meeting, Salt Lake City, Utah (Nov 2-9, 2007)

Islam, M.A., and Ilias, S., "Evaluation and Characterization of Pd-based Membrane Fabricated by Surfactant Induced Electroless Plating," Paper No. 362d, 2007 AIChE Annual Meeting, Salt Lake City, Utah (Nov 2-9, 2007)

Islam, M.A.; Basti, M.M.; and Ilias, S., "Synthesis of Pd-Membranes: Pd+2/EDTA Coordination Kinetics in Typical Electroless Plating Bath Conditions," Abstract and Preprint Paper #215 (ACS FUEL Division), ACS 2007 Annual Meeting, August 19-23, Boston, Massachusetts.

Akanda, M.H.; Islam, M.A.; and Ilias, S., "Modeling of Steam-Methanol Reforming in a Pd based Membrane Reactor," Accepted for presentation at the 2007 NAMS Annual Meeting, June 12-16, 2007, Orlando, Florida.

Islam, M.A., and Ilias, S., "Modeling of Steam-Methanol Reforming in a Pd-based Membrane Reactor," Accepted for presentation at the 2007 NAMS Annual Meeting, June 12- 16, 2007, Orlando, Florida.

Islam, M.A., and Ilias, S., "Effect of Surfactants in Fabrication of Palladium Thin-film Composite Membrane by Electroless Plating Method," Accepted for presentation at the 2007 NAMS Annual Meeting, June 12-16, 2007, Orlando, Florida.

Islam, M.A., and Ilias, S., "Modeling of Permeability Enhancement in Presence of Dislocations in α-phase Palladium-Hydrogen Equilibria," Presented at the 9th International Congress on Inorganic Membranes (ICIM9), June 25-29, 2006, Lillehammer, Norway.

Islam, M.A., and Ilias, S., "Modeling of Hydrogen Permeability in Presence of Dislocations in α-Phase Palladium-Hydrogen Equilibria," Paper #466, Proc. CHEMCON 2006, December 27-30, 2006, Bharuch, India.

Islam, M.A., and Ilias, S., "Modeling of Permeability Enhancement in Presence of Dislocations in α-phase Palladium-Hydrogen Equilibria," Presented at 9th International Congress on Inorganic Membranes (ICIM9), June 25-29, 2006, Lillehammer, Norway.

MEMBRANES FOR USE IN PALLADIUM MEMBRANE REACTOR TECHNOLOGY FOR PRODUCTION OF HYDROGEN FROM COAL GAS

technology maturity:

Bench-Scale, Using Simulated Syngas

project focus:

Palladium-Based Membrane Reactor

participant:

Las Alamos National Laboratory (LANL)

project number:

FE99002-4A24A

NETL project manager:

Richard J. Dunst
richard.dunst@netl.doe.gov

principal investigator:

Stephen Birdsell
Las Alamos National Laboratory (LANL)
steve.birdsell@lanl.gov

partners:

Ames Laboratory

performance period:

10/1/98 – 9/30/08

primary project goals

Las Alamos National Laboratory (LANL) set out to design and develop a composite palladium (Pd) membrane reactor (PMR) capable of extracting hydrogen (H_2) from fossil fuels, resulting in near capture-ready concentrations of carbon dioxide (CO_2) in the effluent stream.

technical goals

- Identify and develop sulfur-tolerant water-gas shift (WGS) catalysts and membranes.
- Develop methods of fabricating PMRs with thin, active Pd-alloy surfaces on porous substrates.
- Determine the performance of the PMRs at elevated pressures.
- Determine the influence impurities impose on the functionality of PMRs.
- Develop Pd alloys resistant to effects of impurities.
- Determine optimal PMR operating pressure and temperature.

technical content

Current methods of extracting H_2 from hydrocarbons have low efficiency due to limitations imposed by reaction equilibrium. A PMR has been developed that combines the WGS reaction with H_2 separation. By doing so, the H_2 product of the reaction is removed from the reaction zone, driving the reaction towards completion and significantly increasing the efficiency of the process. Additionally, the extraction of H_2 leaves behind a near capture-ready concentration of CO_2 in the effluent stream.

Figure 1: Unheated, Broken Pd-Cu/α-Alumina Composite Membrane

The removal of H_2 from the reaction zone increases the reaction rate by freeing up active reaction sites on the catalyst. This results in reaction rates equal to conventional reforming technology at lower temperatures. For instance, conventional methane reforming is carried out at temperatures ranging from 800 to 1,000°C, whereas equivalent results are obtained in a PMR at temperatures near 450°C.

Additionally, the pressure required to carry out the reaction is reduced by the removal of H_2 from the reaction zone. It is estimated that approximately 60 to 80 percent of the feed hydrogen (in the form of water and fuel) will be recovered at an inlet pressure of 10 atm. At 20 atm, the anticipated recovery increases to 80 to 95 percent. However, while higher pressures are not required, the permeation rate decreases significantly with decreasing pressures. Therefore, operating at the optimal pressure is important.

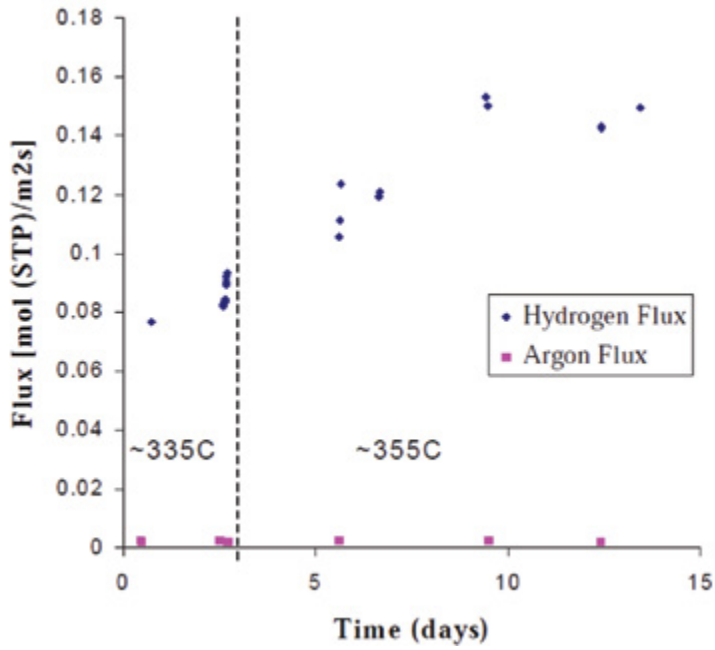

Figure 2: Flux Data for Pd-Cu/α-Alumina Composite Membrane

Coal gas contains impurities, such as hydrogen sulfate (H_2S), which de-activate and degrade Pd membranes. It is expected that the level of degradation will be proportional to the concentration of H_2S present. However, much of the damage should be reversible and simple to alleviate by methods like exposure to steam or air. Also, by combining Pd with copper (Cu) or gold (Au), the amount of sulfur poisoning is reduced significantly.

In order to reduce the cost of membranes and increase the flux of H_2 through the membranes, ultra-thin (<10 microns), Pd-alloy films are applied to H_2-permeable supports to form composite metal membranes. One such membrane has been developed – a vanadium (V) or tantalum (Ta) metal foil coated on both sides with Pd. This membrane has demonstrated fluxes more than 10 times greater than other Pd composite membranes.

technology advantages

In comparison to existing methods of H_2 extraction, PMRs have:

- Nearly 10 times greater flux.
- Reduced capital costs.
- Lower temperatures (450°C), pressures (<20 atm), and amounts of excess water.
- Resistance to hydrogen embrittlement.
- Prolonged physical and chemical stability.

R&D challenges

- Thick membranes have fluxes lower than desired that result in higher capital costs and greater space requirements.
- Impurities, such as H_2S, degrade the functionality of Pd consisting apparatus.

results to date/accomplishments

- Characterized the performance of PMRs with respect to inlet conditions, temperature, geometry, and catalyst type.
- Developed mechanistic model of PMR incorporating information gathered through experimentation.
- Investigated WGS reaction, as well as the reforming of methane, methanol, ethanol, octane, and gasoline with the PMR.
- Fabricated membranes consisting of modified porous supports deposited with thin layers of composite Pd alloys.

next steps

This project ended on June 22, 2007.

available reports/technical papers/presentations

Paglieri, S. N.; Pesiri, D. R.; Dye, R. C.; and Snow, R. C., "Palladium-Coated Vanadium Alloy Membranes for Hydrogen Separation," Proceedings of the 19th Annual Conf. on Fossil Energy Mater. Knoxville, Tennessee, May 2005.

Paglieri, S. N., et.al, "A Pd60¬Cu40/Porous Iron Aluminide Membrane for Hydrogen Separation," Proceedings of the 21st Annual Conf. on Fossil Energy Mater., Knoxville, Tennessee, Apr. 30-May 2, 2007.

Paglieri, S. N., et.al, "Metal Membranes for Hydrogen Separation," Proceedings of the 20th Annual Conf. on Fossil Energy Mater. Knoxville, Tennessee, June 2006.

Paglieri, S. N., "Palladium Membranes" in Nonporous Inorganic Membranes. Edited by A.F. Sammells and M. V. Mundschau, Miley-VCH, pp. 77-106 (2006).

Paglieri, S. N., et.al, "Characterization of V-6Ni-5Co Membranes for Hydrogen Separation," Proceedings of the 9th int. Conf. on Inorganic Membranes, Lillehammer, Norway, June 2006.

MIXED-MATRIX MEMBRANES FOR CO_2 AND H_2 GAS SEPARATIONS USING METAL-ORGANIC FRAMEWORKS AND MESOPOROUS HYBRID SILICAS

primary project goals

The University of Texas at Dallas set out to apply metal organic frameworks (MOFs) and mesoporous hybrid silicas in polymer-based mixed-matrix membranes (MMMs) for the separation of hydrogen (H_2) and carbon dioxide (CO_2).

technical goals

The technical goal of this project is to exploit the high surface areas, adsorption capacities, and selectivities of microporous additives for membrane-based separations.

technical content

Matrimid is a widely used polyimide (a polymer) that has both attractive thermal and gas transport properties. When combined with microporous organic-inorganic hybrid nanocrystals for the preparation of polymer-based MMMs, the time and steps required for membrane preparation is reduced compared to inorganic additives.

The following materials have been synthesized and combined with Matrimid to form MMMs: MOF-5, Copper(II) biphenyldiacetate triethylenediamine metal organic framework (Cu-MOF), metal organic polyhedral 18 (MOP-18), zeolitic imidazolate framework 8 (ZIF-8), zeolite socony mobil 5 (ZSM-5), carbon aerogel, carbon aerogel-zeolite composites, single-walled carbon nanotube (SWNT), Copper(II) bipyridine hexafluorosilicate metal organic framework (Cu-BPY-HFS), and periodic mesoporous organosilicas (PMOs). Experiments have also been conducted to determine the selectivity and permeability of microporous additives with Matrimid MMMs. MOF-5, Cu-MOF, MOP-18, and ZIF-8 were found to be stable up to 350°C, 300°C, 300°C, and 400°C, respectively. Carbon aerogels, carbon aerogel-zeolites, and PMOs showed similar mechanical resistance.

technology maturity:

Bench-Scale

project focus:

Mixed-Matrix Membranes for H_2/CO_2 Separations

participant:

University of Texas at Dallas

project number:

FG26-04NT42173

NETL project manager:

Edgar Klunder
edgar.klunder@netl.doe.gov

principal investigator:

Inga Holl Musselman
University of Texas at Dallas
imusselm@utdallas.edu

partners:

N/A

performance period:

8/26/04 – 8/31/08

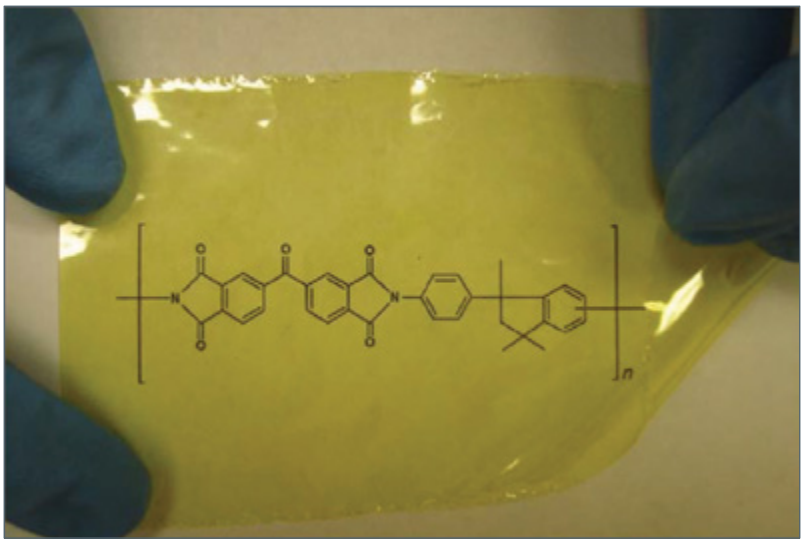

Figure 1: Flat Matrimid Membrane Cast From Chloroform

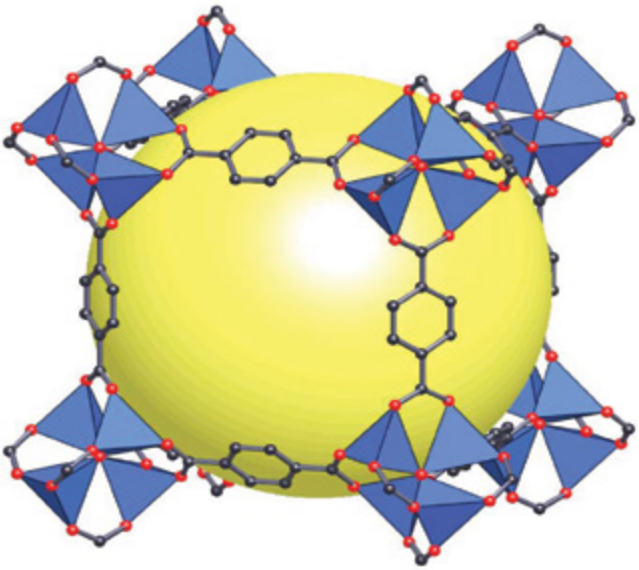

Figure 2: Model of MOF-5

technology advantages

- Addition of substances, such as MOF-5, Cu-MOF, MOP-18, ZIF-8, ZSM-5, carbon aerogel, carbon aerogel-zeolite, functional SWNT and SWNT-short, Cu-BPY-HFS, and PMOs, may provide benefits, such as increased selectivity, permeability, and increased mechanical and thermal stability.
- Incorporation of organic functionalities in frameworks improves dispersion in a polymer matrix.
- Inclusion of these substances reduces time and steps required for membrane preparation. Organic character of the crystals facilitates the dispersion and improves the interfacial contact with the polymer matrix.

R&D challenges

- Obtaining selectivities high enough to achieve effective separation.
- Obtaining permeabilities high enough to achieve efficient separation.
- Developing membrane pores resistant to contamination.

results to date/accomplishments

- Synthesized MOF-5, Cu-MOF, MOP-18, ZIF-8, ZSM-5, carbon aerogel, carbon aerogel-zeolite, functional SWNT and SWNT-short, Cu-BPY-HFS, and PMOs.
- Fabricated all synthesized materials with Matrimid MMMs.
- Completed permeability studies.

next steps

This project ended on August 31, 2008.

available reports/technical papers/presentations

Zhang, Y., et.al, "Mixed Matrix Membranes Composed of Matrimid and Carbon Aerogel and Carbon Aerogel+Zeolite Composite Nanoparticles," PMSE Preprints 95, 812-814 (2006).

Perez, E.V., et.al, "Mixed-Matrix Membranes for Gas Separation Using Metal-Organic Frameworks," PMSE Preprints 95, 815-816 (2006).

this page intentionally left blank

APPENDIX B: CARBON DIOXIDE CAPTURE TECHNOLOGY SHEETS

POST-COMBUSTION SOLVENTS

DEVELOPMENT AND DEMONSTRATION OF WASTE HEAT INTEGRATION WITH SOLVENT PROCESS FOR MORE EFFICIENT CO_2 REMOVAL FROM COAL-FIRED FLUE GAS

technology maturity:

Pilot-Scale, Actual Flue Gas Slipstream

project focus:

Waste Heat Integration

participant:

Southern Company

project number:

FE0007525

NETL project manager:

Bruce Lani
bruce.lani@netl.doe.gov

principal investigator:

Nick Irvin
Southern Company
jairvin@southernco.com

partners:

Mitsubishi Heavy Industries

performance period:

10/1/11 – 3/31/16

primary project goals

Southern Company Services is developing viable heat integration methods for the capture of carbon dioxide (CO_2) produced from pulverized coal (PC) combustion. The project will quantify energy-efficiency improvements to the CO_2 capture process by utilizing a waste heat recovery technology, High-Efficiency System (HES).

technical goals

- Reduction of the amount of extraction steam required for sensible heat load in the solvent regeneration system by the providing of process stream heating through waste heat stream.
- Heating of boiler feed water through waste heat to reduce extraction steam demands on the low-pressure (LP) turbine.
- Increasing LP steam available for power generation or CO_2 regeneration.

technical content

Southern Company Services is developing viable heat integration methods for the capture and sequestration of CO_2 produced from PC combustion. A waste heat recovery (HES) technology is being integrated into an existing 25-MW pilot amine-based CO_2 capture process to evaluate improvements in the energy performance of the integrated PC plant and CO_2 capture process. The HES is a heat exchanger that extracts waste heat from flue gas exiting the power plant's air-preheater and makes that heat available for use elsewhere in the power plant and CO_2 recovery plant.

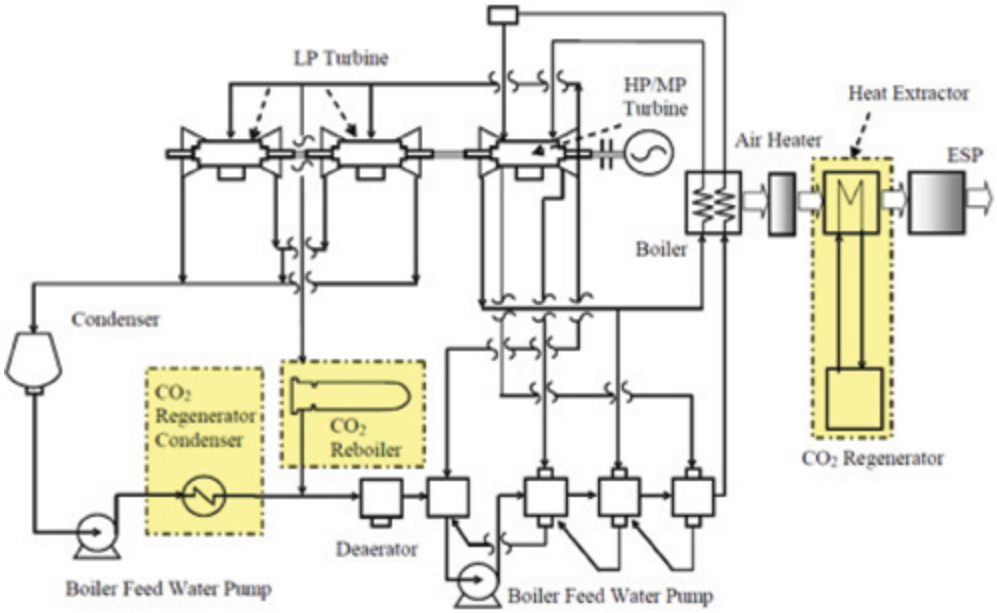

Figure 1: Heat Integration of Power Plant and CCS, Including HES

technology advantages

- The HES provides the efficient use of traditionally wasted heat in coal-fired flue gas and captured CO_2.
- Water usage and parasitic energy loss in carbon capture and storage (CCS) is reduced by the technology.
- The HES accommodates more efficient removal of sulfur trioxide (SO_3) and heavy metals in the electrostatic precipitator by reducing the flue gas temperature and resistivity of fly ash.
- This technology could prove to be a vital method of controlling water usage in a flue gas desulfurization (FGD) due to lower flue gas inlet temperature.

R&D challenges

- This project represents an advanced integration of waste heat in an existing steam cycle and CO_2 capture plant; thus, control schemes need to be developed/proven that will maintain a proper heat balance in the steam cycle and carbon capture plant.
- Lowering flue gas temperature after the air-preheater can be problematic due to metal corrosion potential as a result of acid gas condensation; developing specific operating parameters and controls to manage the threat will be a special challenge.

results to date/accomplishments

- A front-end engineering design (FEED) study was completed and a target cost estimate for construction was assembled.
- The techno-economic analysis was competed.
- All equipment was sized and priced.
- The controls architecture was developed.
- A test plan for the operational period was finalized.
- The continuation application was submitted to the U.S. Department of Energy (DOE).

next steps

Engineering, Procurement, and Construction (EPC).

available reports/technical papers/presentations

N/A

APPLICATION OF A HEAT-INTEGRATED POST-COMBUSTION CO_2 CAPTURE SYSTEM WITH HITACHI ADVANCED SOLVENT INTO EXISTING COAL-FIRED POWER PLANT

technology maturity:

Pilot-Scale, Actual Flue Gas Slipstream

project focus:

Slipstream Demonstration Using the Hitachi Advanced Solvent

participant:

University of Kentucky

project number:

FE0007395

NETL project manager:

Jose Figueroa
jose.figueroa@netl.doe.gov

principal investigator:

Kunlei Liu
University of Kentucky
kunlei.liu@uky.edu

partners:

Hitachi Power Systems America
Electric Power Research Institute
Smith Management Group

performance period:

10/1/11 – 1/31/16

primary project goals

The University of Kentucky is using an innovative heat-integration method that would utilize waste heat from a carbon capture system using the Hitachi advanced solvent while improving steam turbine efficiency. The proposed process also implements a process concept (working with the heat integration method) that increases solvent capacity and capture rate in the carbon dioxide (CO_2) scrubber.

Develop a process using a two-stage stripping concept combined with an innovative heat integration method that utilizes waste heat to reduce costs through use of an improved power plant cooling tower by testing the process in a 0.7-MWe slipstream pilot-scale system.

technical goals

- Demonstrate the University of Kentucky Center for Applied Energy Research (UK-CAER) high-efficiency heat-integrated process.
- Demonstrate the UK-CAER process using the Hitachi advanced solvent.
- Gather data on solvent degradation and water management.
- Gather data on material corrosion and identify appropriate materials for a scale-up plant.

technical content

The objective of this project is to pilot-test a novel heat-integration scheme utilizing waste heat from the CO_2 capture system (CCS) to improve the plant and CCS system efficiency, which will meet the U.S. Department of Energy (DOE) performance and cost targets of 90 percent CO_2 capture, 95 percent CO_2 purity, and an increase in the cost of electricity (COE) of no more than 35 percent. To achieve this, the proposed capture system uses a two-stage stripper configuration where the second stage is designed as an air stripper to reduce the carbon loading in the lean solvent with CO_2-laden air feeding into the boiler as combustion air and an optimized two-stage cooling tower concept to reduce the condenser temperature, thereby improving the turbine efficiency. The project will also involve determining the performance of monoethanolamine (MEA) and the Hitachi advanced solvent in the proposed capture system, identify appropriate materials and solvent pollution control technologies necessary for a 550-MW commercial-scale carbon capture plant, demonstrate the capability of integrating waste heat from the carbon capture platform with the balance-of-plant to improve the overall plant efficiency, and collect the necessary information/data to provide a full techno-economic and environmental health and safety (EH&S) analysis.

The project will involve the design, fabrication, installation, testing, and analyses of a slipstream facility located at LKE's E.W. Brown Generating Station to demonstrate an innovative carbon capture system that utilizes heat integration with the main power plant. The design, start-up, and baseline of the pilot system will be performed with a generic 30 wt% MEA solvent to obtain data for direct comparison with the National Energy Technology Laboratory (NETL) reference case and Hitachi's proprietary solvent H_3-1 that will be tested in the project. Parametric test campaigns, system transient dynamic studies, and long-term continuous verification tests of the heat-integration process and for each of the solvents will be conducted. The series of transient tests will quantify the ability of the carbon capture system to follow load demand, flue gas conditions, and individual component operation. Concurrent with the continuous verification runs, corrosion evaluation and solvent degradation (liquid and gaseous emissions) studies will be conducted. The potential heat integration, solvent and water management, and CO_2 capture system stability and operability will be the main focus points.

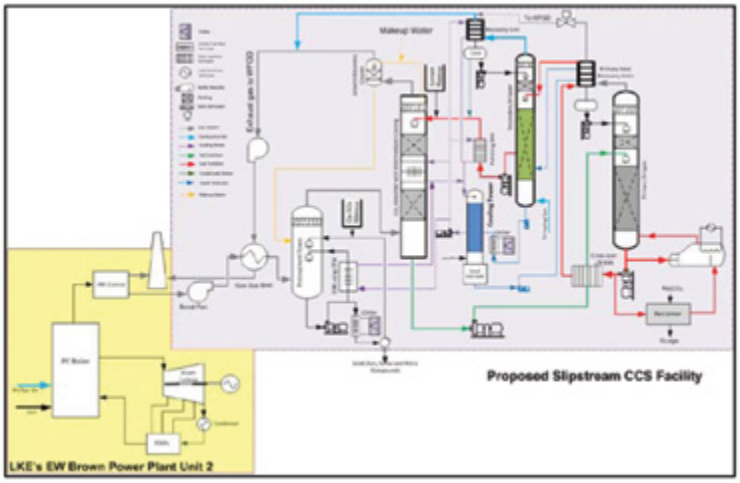

Figure 1: Proposed Slipstream Carbon Capture System

TABLE 1: PROCESS PARAMETERS

	Units	Current R&D Value	Target R&D Value
Pure Solvent			
Molecular Weight	mol^{-1}	Confidential	
Normal Boiling Point	°C	Confidential	
Normal Freezing Point	°C	-	
Vapor Pressure @ 15°C	bar	-	
Manufacturing Cost for Solvent	$/kg	Confidential	
Working Solution			
Concentration	kg/kg	Confidential	
Specific Gravity (15°C/15°C)	-	0.98	
Specific Heat Capacity @ STP	kJ/kg-K	0.92	
Viscosity @ STP	cP	7.0	
Absorption			
Pressure	bar	≈ 1	≈ 1
Temperature	°C	40-50	
Equilibrium CO_2 Loading	mol/mol	-	
Heat of Absorption	kJ/mol CO_2	-	
Solution Viscosity	cP	7.7	
Desorption			
Pressure	bar	≈2	3
Temperature	°C	110-120	
Equilibrium CO_2 Loading	mol/mol	-	
Heat of Desorption	kJ/mol CO_2	-	

TABLE 1: PROCESS PARAMETERS

	Units	Current R&D Value	Target R&D Value
Proposed Module Design		*(for equipment developers)*	
Flue Gas Flowrate	kg/hr		
CO_2 Recovery, Purity, and Pressure	% / % / bar		
Adsorber Pressure Drop	bar		
Estimated Absorber/Stripper Cost of Manufacturing and Installation	$ / kg/hr		

Definitions:

STP – Standard Temperature and Pressure (15°C, 1 atm).

Pure Solvent – Chemical agent(s), working alone or as a component of a working solution, responsible for enhanced CO_2 absorption (e.g., the amine MEA in an aqueous solution).

Manufacturing Cost for Solvent – "Current" is market price of chemical, if applicable; "Target" is estimated manufacturing cost for new solvents, or the estimated cost of bulk manufacturing for existing solvents.

Working Solution – The solute-free (i.e., CO_2-free) liquid solution used as the working solvent in the absorption/desorption process (e.g., the liquid mixture of MEA and water).

Absorption – The conditions of interest for absorption are those that prevail at maximum solvent loading, which typically occurs at the bottom of the absorption column. These may be assumed to be 1 atm total flue-gas pressure (corresponding to a CO_2 partial pressure of 0.13 bar) and 40°C; however, measured data at other conditions are preferable to estimated data.

Desorption – The conditions of interest for desorption are those that prevail at minimum solvent loading, which typically occurs at the bottom of the desorption column. Operating pressure and temperature for the desorber/stripper are process-dependent (e.g., an MEA-based absorption system has a typical CO_2 partial pressure of 1.8 bar and a reboiler temperature of 120°C). Measured data at other conditions are preferable to estimated data.

Pressure – The pressure of CO_2 in equilibrium with the solution. If the vapor phase is pure CO_2, this is the total pressure; if it is a mixture of gases, this is the partial pressure of CO_2. Note that for a typical PC power plant, the total pressure of the flue gas is about 1 atm and the concentration of CO_2 is about 13.2 percent. Therefore, the partial pressure of CO_2 is roughly 0.132 atm or 0.130 bar.

Concentration – Mass fraction of pure solvent in working solution.

Loading – The basis for CO_2 loadings is moles of pure solvent.

Estimated Cost – Basis is kg/hr of CO_2 in CO_2-rich product gas; assuming targets are met.

Other Parameter Descriptions:

Chemical Solvent Mechanism – The absorption reactions for the amine-based CO_2 capture system can be broken into two reactions, as given below. The absorption of CO_2 by primary and secondary amines (SC1) is mainly dictated by the formation of carbamates. The reaction of CO_2 with tertiary amines (SC2) results in the formation of a bicarbonate.

Absorption Reactions:

$$SC1 + CO_2 \rightarrow SC1\text{-}COO^- + H^+$$

$$SC2 + H_2O + CO_2 \rightarrow SC2\text{-}HCO_3^- + H^+$$

In the stripper, the reverse reactions occur with energy input to drive the endothermic reaction and produce free CO_2.

The reaction rate constant for primary and secondary amine species can vary, but is generally on the order of 103. The reaction with tertiary amines to directly form bicarbonate is much slower (10x less). A third possible reaction to form bicarbonate directly from hydroxide present in solution can generally be excluded from consideration despite the fast rate constant (104) because the hydroxide concentration is limited by the base dissociation constant in 30 wt% MEA ($<1x10^{-4}$).

The heat of desorption (dictated by chemical bond enthalpy, gas dissolution, and non-ideal mixing) represents a large portion of the energy input required to drive the endothermic reaction and produce free CO_2 in the stripper. Considering only the chemical reaction component (bulk contribution at stripping conditions), the lowest energy solvent is represented by the bicarbonate reaction (27 kJ/mol), while the carbamate reaction is much higher at approximately 60 to 70 kJ/mol. The Hitachi advanced solvent is optimized to minimize heat of regeneration, yielding an overall energy requirement that is ≈36 percent lower than a baseline MEA solvent for a conventional process.

The rate of CO_2 capture is a function of the overall mass transfer coefficient, interfacial area, and the mean difference in concentration of CO_2 in the flue gas and amine solvent phases. The rate is enhanced if the driving force (mean flue gas CO_2 concentration – mean CO_2 concentration in solvent) is also increased. The size of absorber needed to capture a given quantity of CO_2 is reduced because the solvent has higher rates of CO_2 capture compared to MEA (mass transfer coefficient), and also due to the larger concentration gradient due to the air stripping process enhancements.

Solvent Contaminant Resistance – Exposure to sulfur dioxide (SO_2), halogen, nitrogen oxide (NO_x), and trace metals that are present in the feed flue gas stream can cause the solvent to degrade with time.

Solvent Foaming Tendency – The Hitachi solvent has a low tendency for foaming in the scrubber.

Flue Gas Pretreatment Requirements – After passing through the power plant's SO_2 scrubber, flue gas enters a direct water contactor to reduce the CO_2 absorber operating temperature and remove excess water. Following this, the flue gas enters a counter-flow, pre-treatment tower using a dilute caustic solution for the removal of the final SO_2 and other gaseous contaminants before entering the CO_2 scrubber.

Solvent Make-Up Requirements – Compared to 30 wt% MEA, the Hitachi solvent has low degradation rate and requires approximately 15 percent of MEA make-up rate.

Waste Streams Generated – Solid waste (ash, sulfur, and nitric compounds) generated after the flue gas pre-treatment tower and sludge waste from the amine reclaimer will be removed.

Process Design Concept – As presented in the flowsheet/block flow diagram.

Proposed Module Design – Unless noted, flue gas pressure, temperature, and composition leaving the flue gas desulfurization (FGD) unit (wet basis) should be assumed as:

Pressure	14.7 psia
Temperature	135°F
Composition	
	vol percent
CO_2	13.17
H_2O	17.25
N_2	66.44
O_2	2.34
Ar	0.80
	ppmv
SO_x	42
NO_x	74

technology advantages

- The two-stage stripping unit, including the deployment of an air-based secondary stripper, will regenerate an exceptionally CO_2-lean solvent, increasing the rate of CO_2 absorption.
- Cooling water temperature with the heat-integrated cooling tower can be decreased by more than 2°C compared to conventional evaporative cooling towers, leading to improved steam turbine and power plant efficiency and lower levelized cost of electricity (LCOE).
- The solvent recovery column at the outlet of the gas stream leaving the CO_2 absorber uses water from the in-duct cooler to neutralize and recover solvent vapor in this stream.
- The primary CO_2 stripper can be operated at approximately 3 bars in order to maximize the energy benefit while minimizing system capital and solvent degradation, which could lead to low compressor capital and operating costs.
- The H_3-1 advanced solvent used in this system has (1) a higher mass-transfer flux, (2) a higher net cycle carbon capacity, (3) less energy demand for CO_2 stripping, and (4) lower corrosion rates than a 30 wt% MEA solution.
- H_3-1 is also less corrosive than MEA and has 89 percent lower thermal and oxidative degradation rates compared to MEA, leading to low capital costs and low solvent make-up costs.

R&D challenges

- Solvent air stripping has been demonstrated at the bench scale, but will need to be demonstrated at the slipstream scale.
- The application of a liquid desiccant for the integrated cooling system has been demonstrated for HVAC applications, but will need to be demonstrated for this application.
- Solvent oxidation in the air stripper due to high oxygen content (approximately 12%) must be determined.

results to date/accomplishments

- Results from a preliminary techno-economic analysis indicated significant reduction (≈56%) in the incremental LCOE over a subcritical power plant without CO_2 capture versus 80 percent incremental LCOE for a plant with MEA CO_2 capture system.
- Compared to the Case 10 of the bituminous coal baseline using the conventional Fluor Econamine FG+ technology using MEA as the solvent, the capital costs of the coal power plant using the UK-CAER technology with the MEA solvent were lowered by 10 percent. Compared to the UK-CAER/MEA case, the capital costs of the plant with the UK-CAER/H_3-1 technology were further lowered by 6.7 percent.
- It was estimated from process modeling that the UK-CAER solvent requires ≈36.8 percent lower thermal energy for regeneration compared to the DOE/NETL Reference Case10.
- Laboratory corrosion tests indicated that H_3-1 had a lower corrosion rate compared to MEA, and so lower-cost materials of construction (carbon steel) could be used instead of stainless steel, lowering the plant capital costs.
- A preliminary EH&S assessment indicated minimal or insignificant levels of emissions of solvent degradation byproducts, as well as total air emissions from the proposed 0.7 MWe pilot at the E.W.Brown station.

next steps

- A 0.7-MWe slipstream pilot would be commissioned at the E.W.Brown Generating Station by May 2014.
- Parametric pilot-scale tests using 30 w/w percent MEA and H_3-1 would be completed by November 2014 and November 2015, respectively.

available reports/technical papers/presentations

N/A

SLIPSTREAM PILOT-SCALE DEMONSTRATION OF A NOVEL AMINE-BASED POST-COMBUSTION PROCESS TECHNOLOGY FOR CO_2 CAPTURE FROM COAL-FIRED POWER PLANT FLUE GAS

technology maturity:

Pilot-Scale, Actual Flue Gas Slipstream

project focus:

Slipstream Novel Amine-Based Post-Combustion Process

participant:

Linde

project number:

FE0007453

NETL project manager:

Andrew Jones
andrew.jones@netl.doe.gov

principal investigator:

Krish Krishnamurthy
Linde
krish.krishnamurthy@linde.com

partners:

Selas Fluid Processing Corporation
BASF SE
Linde Engineering Dresden GmbH
EPRI

performance period:

12/1/11 – 11/30/15

primary project goals

Linde is refining a post-combustion capture technology incorporating BASF's novel amine-based process to reduce regeneration energy requirements by designing, building, and operating a 1-MWe equivalent slipstream pilot plant at the National Carbon Capture Center (NCCC).

technical goals

- Complete techno-economic assessment of a 550-MWe power plant integrated with the Linde-BASF post-combustion capture plant incorporating BASF's OASE® blue aqueous amine-based solvent to illustrate the benefits.
- Develop and optimize a basic design package for a 1-MWe equivalent pilot plant.
- Build and operate the 1-MWe pilot plant at a coal-fired power plant host site providing the flue gas as a slipstream.
- Implement parametric tests to demonstrate the achievement of target performance using data analysis.
- Implement long duration testing to demonstrate solvent stability and obtain critical data for scale-up.

technical content

Linde and partners are designing, building, and operating a 1-MWe pilot plant at NCCC. The technology aims to reduce the regeneration energy requirements using novel solvents that are stable under coal-fired power plant feed gas conditions. BASF's OASE® blue technology has been developed to address the key drawbacks in the large-scale application of monoethanolamine (MEA) for flue gas carbon capture, including: (1) high specific energy for regeneration, (2) lack of stability toward thermal and oxidative degradation, (3) increased corrosiveness with increased carbon dioxide (CO_2) loading, and (4) lack of tolerance to impurities from coal combustion products. The specific proprietary solvent has been selected by: (1) screening approximately 400 chemical substances using vapor-liquid equilibrium measurements to determine approximate cyclic capacities, (2) laboratory measurements of the key thermodynamic and kinetic properties of the 70 screened candidates and their mixtures to identify approximately 15 targets, (3) testing of the targets to determine optimum circulation rate and specific energy consumption in a laboratory-scale mini-plant to identify the leading candidates, and (4) pilot testing of three candidates with real power plant flue gas to identify the optimum solvent for the flue gas application. The

CO_2 regeneration from the solvent is carried out by using low-pressure steam, typically from the power plant steam cycle. Testing using a 0.45-MWe pilot plant utilizing lignite-fired power plant flue gas has shown that the OASE blue solvent is stable and little degradation was observed over 5,000 hours, whereas the reference MEA solvent started to degrade appreciably under same conditions after 2,000 hours.

Linde's post-combustion CO_2 capture process using BASF OASE blue solvent has several distinct characteristics. Firstly, the direct-contact cooler, CO_2 absorber, and water wash are integrated into a single column with high-performance structured packing for increased capacity (smaller absorber diameter) and an advanced material of construction to minimize capital costs. Secondly, the absorber also has an interstage solvent cooler operating on gravity flow, eliminating the capital and operating expenses of a solvent pump. The flue gas blower is located downstream of the absorber to minimize its size (due to the lesser volume of flue gas handled by the blower). Further, the stripping column can be operated at higher pressures (up to 3.6 atm) than that of a MEA stripper, lowering compression costs. Finally, optional process heat integration allows steam raised by heat exchange with flue gas before the flue gas desulfurization (FGD) unit to be used at an intermediate point in the desorber, and the use of back-pressure steam turbines allows the recovery of part of the energy of the intermediate-pressure (IP), low-pressure (LP) crossover steam.

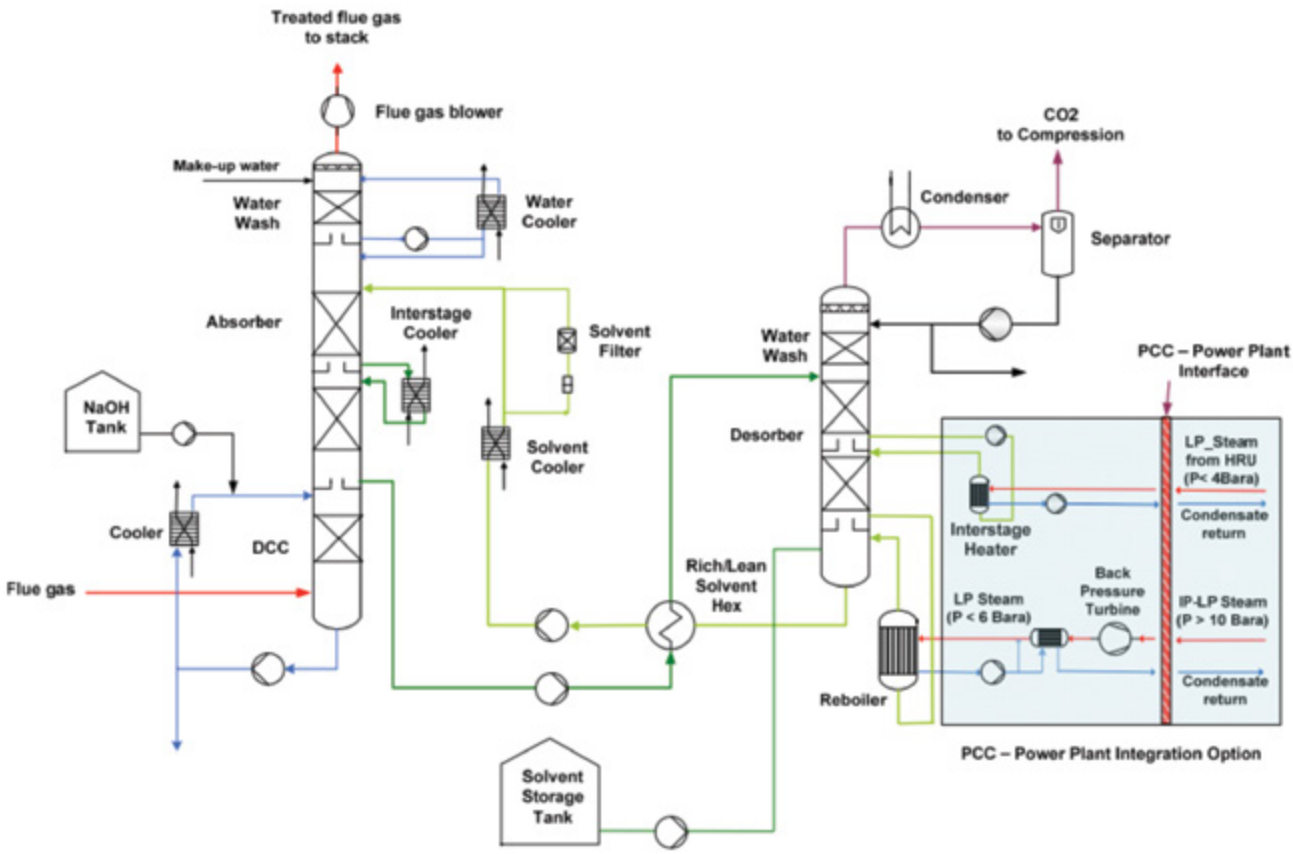

Figure 1: Linde-BASF Post-Combustion Capture Plant

TABLE 1: PROCESS PARAMETERS BASED ON TECHNO-ECONOMIC ASSESSMENT OF A 550-MW PLANT (SEE REFERENCE)

	Units	Current R&D Value	Target R&D Value
Pure Solvent			
Molecular Weight	mol^{-1}	Proprietary	
Normal Boiling Point	°C		
Normal Freezing Point	°C		
Vapor Pressure @ 15°C	bar		
Manufacturing Cost for Solvent	$/kg		

TABLE 1: PROCESS PARAMETERS BASED ON TECHNO-ECONOMIC ASSESSMENT OF A 550-MW PLANT (SEE REFERENCE)

	Units	Current R&D Value	Target R&D Value
Working Solution			
Concentration	kg/kg		
Specific Gravity (15°C/15°C)	-		
Specific Heat Capacity @ STP	kJ/kg-K		
Viscosity @ STP	cP		
Absorption			
Pressure	bar	≈1 atm	≈1 atm
Temperature	°C	30-70	30-60
Equilibrium CO_2 Loading	mol/mol		
Heat of Absorption	kJ/mol CO_2		
Solution Viscosity	cP		
Desorption			
Pressure	bar	1.6 to 2.5	1.6 to 3.5
Temperature	°C	Proprietary	
Equilibrium CO_2 Loading	mol/mol		
Heat of Desorption	kJ/mol CO_2		
Proposed Module Design		*(for equipment developers)*	
Flue Gas Flowrate	kg/hr		
CO_2 Recovery, Purity, and Pressure	% / % / bar		
Adsorber Pressure Drop	bar		
Estimated Absorber/Stripper Cost of Manufacturing and Installation	$\frac{\$}{kg/hr}$		

Definitions:

STP – Standard Temperature and Pressure (15°C, 1 atm).

Pure Solvent – Chemical agent(s), working alone or as a component of a working solution, responsible for enhanced CO_2 absorption (e.g., the amine MEA in an aqueous solution).

Manufacturing Cost for Solvent – "Current" is market price of chemical, if applicable; "Target" is estimated manufacturing cost for new solvents, or the estimated cost of bulk manufacturing for existing solvents.

Working Solution – The solute-free (i.e., CO_2-free) liquid solution used as the working solvent in the absorption/desorption process (e.g., the liquid mixture of MEA and water).

Absorption – The conditions of interest for absorption are those that prevail at maximum solvent loading, which typically occurs at the bottom of the absorption column. These may be assumed to be 1 atm total flue-gas pressure (corresponding to a CO_2 partial pressure of 0.13 bar) and 40°C; however, measured data at other conditions are preferable to estimated data.

Desorption – The conditions of interest for desorption are those that prevail at minimum solvent loading, which typically occurs at the bottom of the desorption column. Operating pressure and temperature for the desorber/stripper are process-dependent (e.g., an MEA-based absorption system has a typical CO_2 partial pressure of 1.8 bar and a reboiler temperature of 120°C). Measured data at other conditions are preferable to estimated data.

Pressure – The pressure of CO_2 in equilibrium with the solution. If the vapor phase is pure CO_2, this is the total pressure; if it is a mixture of gases, this is the partial pressure of CO_2. Note that for a typical PC power plant, the total pressure of the flue gas is about 1 atm and the concentration of CO_2 is about 13.2 percent. Therefore, the partial pressure of CO_2 is roughly 0.132 atm or 0.130 bar.

Concentration – Mass fraction of pure solvent in working solution.

Loading – The basis for CO_2 loadings is moles of pure solvent.

Estimated Cost – Basis is kg/hr of CO_2 in CO_2-rich product gas; assuming targets are met.

Other Parameter Descriptions:

Flue Gas Pretreatment Requirements – The pretreatment requirement includes reducing sulfur oxide (SO_x) in the flue gas to 2 to 5 parts per million (ppm) in order to limit solvent degradation and is implemented in a direct contact cooler in conjunction with flue gas cooling, typically by adding appropriate amount of sodium hydroxide corresponding to the SO_x present in the flue gas.

Waste Streams Generated – The main waste liquid stream is from the direct contact cooler where SO_x is removed; this stream is typically handled in the power plant waste water treatment facility. A small amount of solid waste is removed using carbon filters that are replaced at regular intervals. Since the degradation observed in the pilot testing is small, no solvent reclamation unit is envisioned in the large scale.

Process Design Concept – Flowsheet/block flow diagram, if not included above.

Proposed Module Design – Unless noted, flue gas feed pressure is 1.014 bara, temperature is 57°C, and composition leaving the flue gas desulfurization (FGD) unit (wet basis) should be assumed:

Composition (% vol)					Composition (ppmv)	
CO_2	H_2O	N_2	O_2	Ar	SO_x	NO_x
13.17	17.25	66.44	2.34	0.8	42	74

technology advantages

- Significant reduction in regeneration steam consumption (24 to 40 percent lower), electrical power (25 to 60 percent lower), and cooling water duty (26 percent lower) compared to a reference MEA plant.
- Higher plant efficiency (29.4 percent higher heating value [HHV]) and lower thermal load compared to a reference MEA plant (24.9%) due to a combination of advanced solvent and process improvements, including integrated absorber, downstream gas blower, higher desorber pressure, and interstage gravity-flow cooler.
- The total plant costs are ≈17 percent lower compared to a reference MEA plant (≈$2,400 to $2,435/kW vs. $2,893/kW for 550 MWnet power plant with MEA CO_2 capture). Lower post-combustion capture plant capital costs (30 to 35 percent compared to reference MEA at 550 MWe).
- The Linde-BASF technology is readily scalable to large capacities with a single-train system, offering the potential to further reduce costs by utilizing economies of scale.
- BASF is a producer of the solvent in addition to being the technology owner, thereby enabling application at scale by avoiding issues related to solvent manufacturing for large-scale commercial plants.

R&D challenges

- Proving the process enhancements at the 1-MWe plant and at larger scale.
- Validating the basis for scale-up of the advanced process features and the large, single-train capability.

results to date/accomplishments

- Techno-economic assessment of the Linde-BASF OASE blue process indicated that the cost of electricity (COE) only increased by 58 to 60 percent compared to an 84 percent increase for the reference subcritical pulverized coal plant with 550 MW net-electricity generation.
- The estimated reboiler energy consumption due to the BASF OASE blue solvent was reduced from 3.55 GJ/T CO_2 to 2.4 to 2.6 GJ/T CO_2.
- Design basis document completed and 1-MWe pilot plant features selected. Basic design and engineering of the 1-MWe pilot plant completed.
- Detailed 3-D model developed for the 1-MWe pilot plant. Detailed engineering has been completed and technical packages for the equipment, modules, and construction have been developed. These packages have been sent to multiple vendors and cost estimates have been received; cost compilation and preferred vendor selection has been performed.
- National Environmental Policy Act (NEPA) documentation completed. Hazop review completed and design updates incorporated.
- A continuation budget request application and presentation to the U.S. Department of Energy (DOE)/National Energy Technology Laboratory (NETL) has been completed and agreement has been reached to proceed to Budget Period 2.

next steps

- Procurement activities have been initiated and vendor engineering and equipment build for long lead items have been released.
- The pilot plant would be fabricated, installed, and mechanically completed at NCCC by May 15, 2014.
- Parametric and long duration tests would be performed, and target performance would be verified during the course of 1-MW pilot plant testing starting June 2014.

available reports/technical papers/presentations

Krishnamurthy, K.R., "Slipstream pilot plant demo of an amine-based post-combustion capture technology for CO_2 capture from a coal-fired power plant flue gas.", presented at the 2012 NETL CO2 Capture Technology Meeting, July 2012, Pittsburgh, PA. Available at: *http://www.netl.doe.gov/publications/proceedings/12/co2capture/presentations/2-Tuesday/K%20Krishnamurthy-Linde-Pilot-scale%20Amine.pdf*.

LOW-ENERGY SOLVENTS FOR CO_2 CAPTURE ENABLED BY A COMBINATION OF ENZYMES AND ULTRASONICS

primary project goals

Novozymes is leading a team comprised of the University of Kentucky, Doosan Power Systems, and the Pacific Northwest National Laboratory (PNNL) to design, build, and test an integrated bench-scale system that combines the attributes of an enzyme catalyst (carbonic anhydrase [CA]) with low-enthalpy absorption liquids and novel ultrasonically enhanced regeneration for a carbon dioxide (CO_2) capture process with improved efficiency, economics, and sustainability.

technical goals

- Demonstrate that ultrasonic regeneration can deliver a lean-loading equivalent to lean loading achieved with vacuum stripping at 70°C.
- Optimize enzyme-promoted potassium carbonate (K_2CO_3)-based solvent for maximum CO_2 absorption rate.
- Demonstrate enzyme robustness for meeting targeted bench-scale test conditions.
- Design and build an integrated bench-scale unit incorporating the novel ultrasonic regeneration component.
- Demonstrate system performance and benefits based on completion of 500 hours of testing.
- Complete a full technology assessment of the process and potential for meeting significant reductions in net parasitic load compared to conventional scrubbing technology.

technical content

The Novozymes-led team will design, build, and test an integrated bench-scale system that combines the attributes of the bio-renewable enzyme CA with low-enthalpy absorption liquids and novel ultrasonically enhanced regeneration. The objective is to develop a CO_2 capture process with improved efficiency and economics when compared with existing CO_2 scrubber technologies.

The application of CA enzyme accelerates inter-conversion between dissolved CO_2 and bicarbonate ion, which is the rate-limiting step for absorption and desorption in solutions that rely on ionic complexation of CO_2. The application of ultrasonic energy transforms dissolved CO_2 into gas bubbles, thereby increasing the overall driving force of the solvent regeneration reaction. Additionally, through ultrasonics, a coupled effect of rectified diffusion could have the potential to yield lean solvent CO_2 loading equivalent to vacuum stripping. The combination of these synergistic technologies is projected to reduce the net parasitic load to a coal-fired power plant by as much as 51 percent compared to conventional monoethanolamine (MEA) scrubbing technology.

technology maturity:

Bench-Scale, Simulated Flue Gas

project focus:

Enzyme and Ultrasonic Combination Technology

participant:

Novozymes

project number:

FE0007741

NETL project manager:

Andrew Jones
andrew.jones@netl.doe.gov

principal investigator:

Sonja Salmon
Novozymes
SISA@novozymes.com

partners:

University of Kentucky
Doosan Power Systems Ltd
Pacific Northwest National Laboratory

performance period:

10/1/11 – 3/31/15

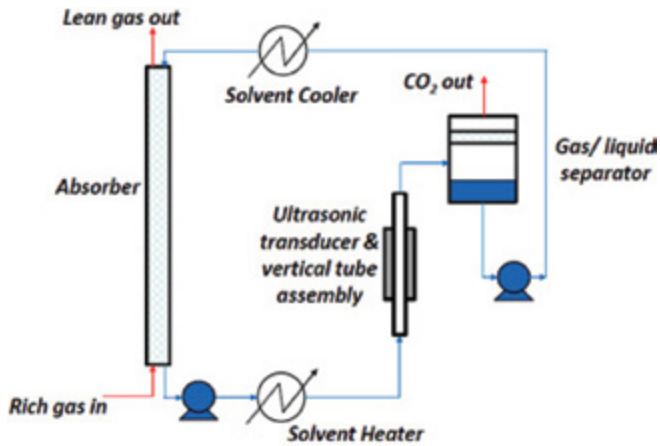

Figure 1: Bench-Scale Process Schematic

TABLE 1: PROCESS PARAMETERS

	Units	Current R&D Value	Target R&D Value
Pure Solvent (K_2CO_2)			
Molecular Weight	mol^{-1}	138.21	138.21
Normal Boiling Point	°C	N/A	N/A
Normal Freezing Point	°C	N/A	N/A
Vapor Pressure @ 15°C	bar	N/A	N/A
Manufacturing Cost for Solvent	$/kg	1.3	<1.3
Working Solution			
Concentration	kg/kg	0.2	0.2
Specific Gravity (15°C/15°C)	-	1.16	1.16
Specific Heat Capacity @ STP	kJ/kg-K	≈3.4b	≈3.4b
Viscosity @ STP	cP	≈1.4	≈1.4
Absorption			
Pressure	bar	1	1
Temperature	°C	30-40	30-50
Equilibrium CO_2 Loading	mol/mol	0.67	0.67
Heat of Absorption	kJ/mol CO_2	27	27
Solution Viscosity	cP	≈1.4	≈1.4
Desorption			
Pressure	bar	1	1
Temperature	°C	70	70
Equilibrium CO_2 Loading	mol/mol	0.3	0.3
Heat of Desorption	kJ/mol CO_2	27	27

Definitions:

N/A – Not applicable

STP – Standard Temperature and Pressure (15°C, 1 atm).

Pure Solvent – Chemical agent(s), working alone or as a component of a working solution, responsible for enhanced CO_2 absorption (e.g., the amine MEA in an aqueous solution).

Manufacturing Cost for Solvent – "Current" is market price of chemical, if applicable; "Target" is estimated manufacturing cost for new solvents, or the estimated cost of bulk manufacturing for existing solvents.

Working Solution – The solute-free (i.e., CO_2-free) liquid solution used as the working solvent in the absorption/desorption process (e.g., the liquid mixture of MEA and water).

Absorption – The conditions of interest for absorption are those that prevail at maximum solvent loading, which typically occurs at the bottom of the absorption column. These may be assumed to be 1 atm total flue-gas pressure (corresponding to a CO_2 partial pressure of 0.13 bar) and 40°C; however, measured data at other conditions are preferable to estimated data.

Desorption – The conditions of interest for desorption are those that prevail at minimum solvent loading, which typically occurs at the bottom of the desorption column. Operating pressure and temperature for the desorber/stripper are process-dependent (e.g., an MEA-based absorption system has a typical CO_2 partial pressure of 1.8 bar and a reboiler temperature of 120°C). Measured data at other conditions are preferable to estimated data.

Pressure – The pressure of CO_2 in equilibrium with the solution. If the vapor phase is pure CO_2, this is the total pressure; if it is a mixture of gases, this is the partial pressure of CO_2. Note that for a typical pulverized-coal power plant, the total pressure of the flue gas is about 1 atm and the concentration of CO_2 is about 13.2 percent. Therefore, the partial pressure of CO_2 is roughly 0.132 atm or 0.130 bar.

Concentration – Mass fraction of pure solvent in working solution.

Loading – The basis for CO_2 loadings is moles of pure solvent.

Estimated Cost – Basis is kg/hr of CO_2 in CO_2-rich product gas; assuming targets are met.

[a] Working solution additionally contains CA enzyme catalyst.
[b] Technical Data: Properties of Potassium Carbonate. Armand Products Company. *http://www.armandproducts.com/pdfs/k2so3P33_46.pdf*

Other Parameter Descriptions:

Chemical/Physical Solvent Mechanism

1. $CO_{2(g)} \leftrightarrow CO_{2(aq)}$ (gas-liquid physical mass transfer)
2. $CO_{2(aq)} + HO^- \leftrightarrow HCO_3^-$
3. $HCO_3^- + HO^- \leftrightarrow CO_3^{=} + H_2O$ ($pK_a = 10.3$)
4. $CO_{2(aq)} + H_2O \leftrightarrow H_2CO_3$
5. $H_2CO_3 + HO^- \leftrightarrow HCO_3^- + H_2O$ ($pK_a = 6.4$)
6. $H_2O \leftrightarrow H^+ + HO^-$

Equations 2 and 3 represent the reactions in equilibrium through the working pH range (pH 8 to 10) relevant for CO_2 absorption. In the CO_2 absorption reaction, CA catalyses Equation 2 with a concurrent release of protons as hydroxide is consumed, balanced by the dissociation of water in Equation 6.

The kinetics of CO_2 absorption in enzyme (CA)/K_2CO_3 solution were measured using the wetted-wall column technique. The current enzyme/K_2CO_3-solvent supports a mass transfer rate ≥ 50 percent the rate of benchmark 30 percent MEA.

Solvent Contaminant Resistance – Publications by Akermin, Inc. (DE-FE0004228) and the University of Illinois (DE-FC26-08NT0005498) demonstrate the robustness of enzyme-promoted K_2CO_3 solvents to typical flue gas contaminants at lab scale.

Solvent Foaming Tendency – Based on lab tests, solvent foaming can be mitigated by antifoam, if necessary.

Flue Gas Pretreatment Requirements – No special requirements expected beyond conventional pretreatment for particulate, sulfur oxide (SO_x), and nitrogen oxide (NO_x) removal.

Solvent Make-up Requirements – Preliminary feasibility study assumed a K_2CO_3 make-up rate of 0.1 ton/day and continuous enzyme reclamation from 0.05 percent lean solvent slipstream.

Waste Streams Generated – Waste stream consists of K_2CO_3 salts and biodegradable enzyme, which could be used as compost or boiler fuel.

Process Design Concept – Bench-scale process schematic is shown in Figure 1.

Proposed Module Design – Unless noted, flue gas feed pressure is 1.014 bara, temperature is 57°C, and composition leaving the flue gas desulfurization (FGD) unit (wet basis) should be assumed:

Composition (% vol)					Composition (ppmv)	
CO_2	H_2O	N_2	O_2	Ar	SO_x	NO_x
13.17	17.25	66.44	2.34	0.8	42	74

technology advantages

- The energy required for solvent regeneration is provided by ultrasonics and low-temperature steam.
- Enzyme helps overcome the inherently slow reaction rates of the K_2CO_3-based solvent, which have previously made its use for atmospheric CO_2 scrubbing prohibitive. Enzyme-enhanced rates of CO_2 absorption compared to aqueous K_2CO_3 without CA could lead to capital cost savings.
- K_2CO_3 has chemical handling advantages due to negligible vapor pressure, no flash point, no odor.
- Potential lowering the energy required for solvent regeneration by ≈50 percent compared to MEA, leading to lower fuel costs.

R&D challenges

- Scale-up of the ultrasonic regeneration system from lab-scale to the bench-scale (10-30 standard liters/min [SLPM] gas, 0.1-0.30 LPM solvent).
- Initial results in PNNL batch ultrasonic test system showed rapid CO_2 re-dissolution of generated gases, which points to the need for specialized gas removal in the continuous system.

results to date/accomplishments

- Demonstrated CO_2 release via the addition of ultrasonic energy in laboratory-scale tests – approximately one third of the target.
- Preliminary lab results indicate enzyme-solvent compatibility and robustness to simulated process pH, ultrasonics, and absorber temperature.
- Achieved milestone mass transfer rate for absorption in wetted-wall column tests.
- Results from preliminary techno-economic analysis indicate that the levelized cost of electricity (LCOE) was increased by ≈68 percent compared to a power plant without CO_2 capture.

next steps

- Bench unit would be fabricated and various unit operations to be tested by September 2013.
- Complete bench-scale design configuration based on laboratory testing to date.
- A full-scale, techno-economic analysis to be completed by December 2014.
- 500 hours of testing on the fully integrated bench-scale system by December 2014.

available reports/technical papers/presentations

N/A

CARBON ABSORBER RETROFIT EQUIPMENT (CARE)

primary project goals

Neumann Systems Group, Inc. (NSG) is designing, constructing, and testing a patented NeuStream™ absorber at the Colorado Springs Utilities (CSU) Drake #7 power plant. The absorber will employ nozzle technology proven during a recently completed 20-MW NeuStream-S flue gas desulfurization (FGD) pilot project, as well as an 8-m piperazine (PZ) solvent, which is more effective for capturing carbon dioxide (CO_2).

technical goals

- Design a 0.5-MWe slipstream CO_2 scrubber that will minimize parasitic power through efficient design.
- Demonstrate a two-month steady-state operation with a three-stage absorber and a multi-stage stripper.
- Demonstrate 90 percent CO_2 capture efficiency utilizing the best available solvent.
- Show unit traceability/scalability to commercial scale.

technical content

NSG will conduct the Carbon Absorber Retrofit Equipment (CARE) project to design, construct, and test the NeuStream-C, a patented absorber technology. The NeuStream-C absorber will use a proven technology with an array of flat jets and an advanced solvent (8 m PZ) to capture CO_2. The CARE project will be based on modeling (computational fluid dynamics [CFD] and Aspen Plus) and analysis of carbon capture data from slipstream experiments, where experimental specific surface areas of 440 m^2/m^3 have been achieved. A compact NeuStream-C module will be inserted post-baghouse into a 0.5-MWe slipstream at the CSU Drake #7 power plant. The slipstream will be equipped with sulfur oxide (SO_x) scrubbing and amine washing equipment that also utilizes the NSG flat jet technology. The SO_x scrubbing equipment uses compact modular NeuStream technology and can be adjusted to residual SO_x level (1 to 30 parts per million [ppm]) prior to CO_2 capture. The CARE project will employ slipstream nitrogen oxide (NO_x) removal; a four-stage, 0.5-MWe NeuStream-C high-performance absorber unit for scrubbing; a novel stripper design that reduces heat waste; and a flue gas heat-recovery method to offset a portion of steam usage.

technology maturity:

Pilot-Scale, Actual Flue Gas Slipstream

project focus:

Carbon Absorber Retrofit Equipment

participant:

Neumann Systems Group

project number:

FE0007528

NETL project manager:

Andy O'Palko
andrew.opalko@netl.doe.gov

principal investigator:

Andrew Awtry
Neumann Systems Group
andya@neumannsystemsgroup.com

partners:

Colorado Springs Utilities
UNDEERC
Industrial Constructor Managers
URS

performance period:

1/2/12 – 1/31/15

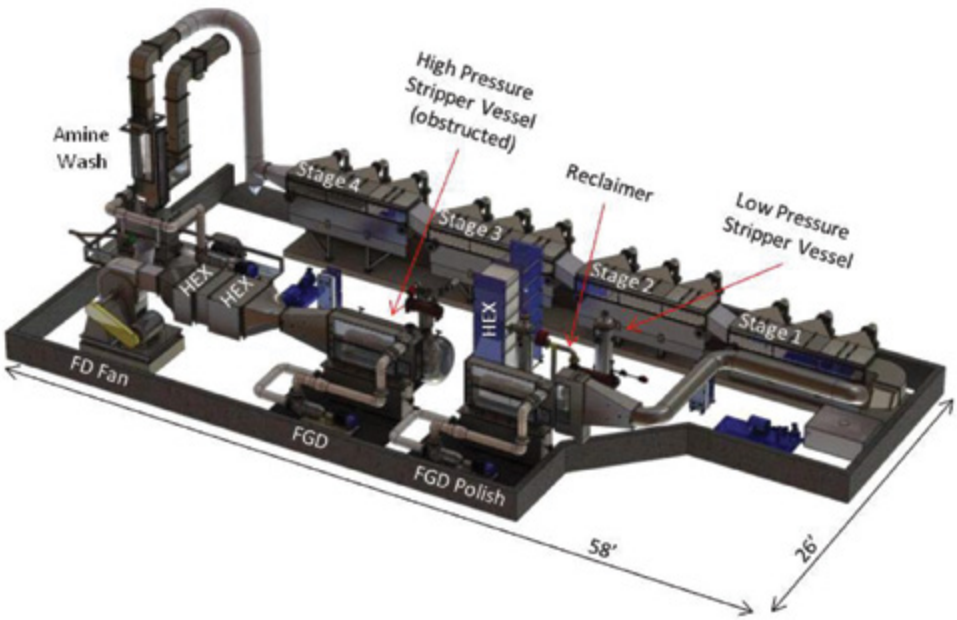

Figure 1: The System Layout of the 0.5-MW NeuStream™-C Demonstrator System

TABLE 1: PROCESS PARAMETERS

	Units	Current R&D Value	Target R&D Value
Pure Solvent (K_2CO_2)			
Molecular Weight	mol^{-1}	86.14	86.14
Normal Boiling Point	°C	146	146
Normal Freezing Point	°C	48	48
Vapor Pressure @ 15°C	bar	<0.001	<0.001
Manufacturing Cost for Solvent	$/kg		
Working Solution			
Concentration	kg/kg	41%	41%
Specific Gravity (15°C/15°C)	-	1.036	1.036
Specific Heat Capacity @ STP	kJ/kg-K	3.5 (40 C, 0.41 loading)	3.5 (40 C, 0.41 loading)
Viscosity @ STP	cP	10cP @40 C, 0.41 loading	10cP @40 C, 0.41 loading
Absorption			
Pressure	bar	1	1
Temperature	°C	40	40
Equilibrium CO_2 Loading	mol/mol	0.38	0.38
Heat of Absorption	kJ/mol CO_2		
Solution Viscosity	cP		
Desorption			
Pressure	bar	4	8
Temperature	°C	150	150
Equilibrium CO_2 Loading	mol/mol	0.28	0.28
Heat of Desorption	kJ/mol CO_2		

TABLE 1: PROCESS PARAMETERS

	Units	Current R&D Value	Target R&D Value
Proposed Module Design		*(for equipment developers)*	
Flue Gas Flowrate	kg/hr		
CO_2 Recovery, Purity, and Pressure	% / % / bar	90%, >95%, 4/8 bar	
Absorber Pressure Drop	bar	0.027	
Estimated Absorber/Stripper Cost of Manufacturing and Installation	$\frac{\$}{kg/hr}$		

Definitions:

STP – Standard Temperature and Pressure (15°C, 1 atm).

Pure Solvent – Chemical agent(s), working alone or as a component of a working solution, responsible for enhanced CO_2 absorption (e.g., the amine monoethanolamine [MEA] in an aqueous solution).

Manufacturing Cost for Solvent – "Current" is market price of chemical, if applicable; "Target" is estimated manufacturing cost for new solvents, or the estimated cost of bulk manufacturing for existing solvents.

Working Solution – The solute-free (i.e., CO_2-free) liquid solution used as the working solvent in the absorption/desorption process (e.g., the liquid mixture of MEA and water).

Absorption – The conditions of interest for absorption are those that prevail at maximum solvent loading, which typically occurs at the bottom of the absorption column. These may be assumed to be 1 atm total flue-gas pressure (corresponding to a CO_2 partial pressure of 0.13 bar) and 40°C; however, measured data at other conditions are preferable to estimated data.

Desorption – The conditions of interest for desorption are those that prevail at minimum solvent loading, which typically occurs at the bottom of the desorption column. Operating pressure and temperature for the desorber/stripper are process-dependent (e.g., an MEA-based absorption system has a typical CO_2 partial pressure of 1.8 bar and a reboiler temperature of 120°C). Measured data at other conditions are preferable to estimated data.

Pressure – The pressure of CO_2 in equilibrium with the solution. If the vapor phase is pure CO_2, this is the total pressure; if it is a mixture of gases, this is the partial pressure of CO_2. Note that for a typical pulverized coal (PC) power plant, the total pressure of the flue gas is about 1 atm and the concentration of CO_2 is about 13.2 percent. Therefore, the partial pressure of CO_2 is roughly 0.132 atm or 0.130 bar.

Concentration – Mass fraction of pure solvent in working solution.

Loading – The basis for CO_2 loadings is moles of pure solvent.

Estimated Cost – Basis is kg/hr of CO_2 in CO_2-rich product gas; assuming targets are met.

Other Parameter Descriptions:

Chemical/Physical Solvent Mechanism – The reaction of PZ with CO_2 involves formation of the following four PZ species:

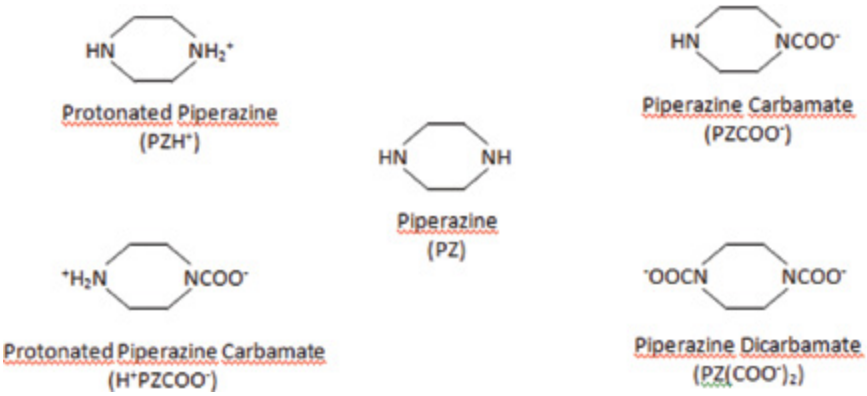

Figure 2: Molecular Structure of Piperazine Species[1]

These reactions are as follows:

1. $PZH^+ + H_2O \leftrightarrow PZ + H_3O^+$
2. $PZ + CO_2 + H_2O \leftrightarrow PZCOO^- + H_3O^+$
3. $H_2O + H^+PZCOO^- \leftrightarrow H_3O^+ + PZCOO^-$
4. $PZCOO^- + CO_2 + H_2O \leftrightarrow PZ(COO^-)2 + H_3O^+$

TABLE 2: EQUILIBRIUM CONSTANTS FOR ABOVE REACTIONS[1]

Eq. No.	Equilibrium Constant	$\ln K = A + B/T + C \ln T$		
		A	B	C
1	$K_1 = \frac{x_{PZ} x_{H3O+}}{x_{H2O} x_{PZH+}}$	-11.91	-4,351	–
2	$K_2 = \frac{x_{H3O+} x_{PZCOO-}}{x_{PZ} x_{CO2} x_{H2O}}$	-29.31	5,615	–
3	$K_3 = \frac{x_{H3O+} x_{PZCOO-}}{x_{H+PZCOO-} x_{H2O}}$	-8.21	-5,286	–
4	$K_4 = \frac{x_{H3O+} x_{PZ(COO-)2}}{x_{PZCOO-} x_{CO2} x_{H2O}}$	-30.78	5,615	–

This speciation and solubility model has been used to predict the partial pressure of CO_2 and mole fraction of species in solution as a function of PZ loading; the results show a good match between the model and the experimental data.

Solvent Contaminant Resistance – 8-m PZ is thermally stable at 150°C with negligible oxidative degradation. The total amine loss is estimated to be 0.4 percent/week when stripping at 150°C. At 135°C, the reported thermal degradation of PZ is 0.07 percent as compared to 8.1 percent in the case of an MEA solvent. The main degradation products of PZ are nitrates (0.13 mM/hr) and ethylenediamine (0.09 mM/hr).

Flue Gas Pretreatment Requirements – The flue gas will be passed through NO_x- and SO_x-removal systems before feeding to the CARE system. The SO_x concentration will be kept below 10 ppm using the existing technology. The polishing scrubber for SO_x removal has a high volumetric mass-transfer coefficient and 90 percent removal efficiency. The polishing scrubber also cools the flue gas from 57°C to ≈32°C by contacting the flue gas with cold sorbent. This reduces the volumetric flow rate through the CO_2 absorber and counteracts some of the heat from the exothermic CO_2 absorption reaction, reducing the PZ solvent temperature and decreasing the equilibrium vapor pressure, both of which help to reduce the size of the CO_2 absorber.

Waste Streams Generated – The major amine waste streams come from: (1) post-amine wash, (2) the stripper, and (3) reclaimer waste. Other than these, there could be fugitive liquid amine emissions, which can be controlled by incorporating seamless valves, rupture disks, closed-loop ventilation systems, pumps with dual mechanical seals, minimum welds, and correct gasket material selection. Also, solid waste will be generated in the reclaimer and inline filters.

Process Design Concept – Process flow diagram:

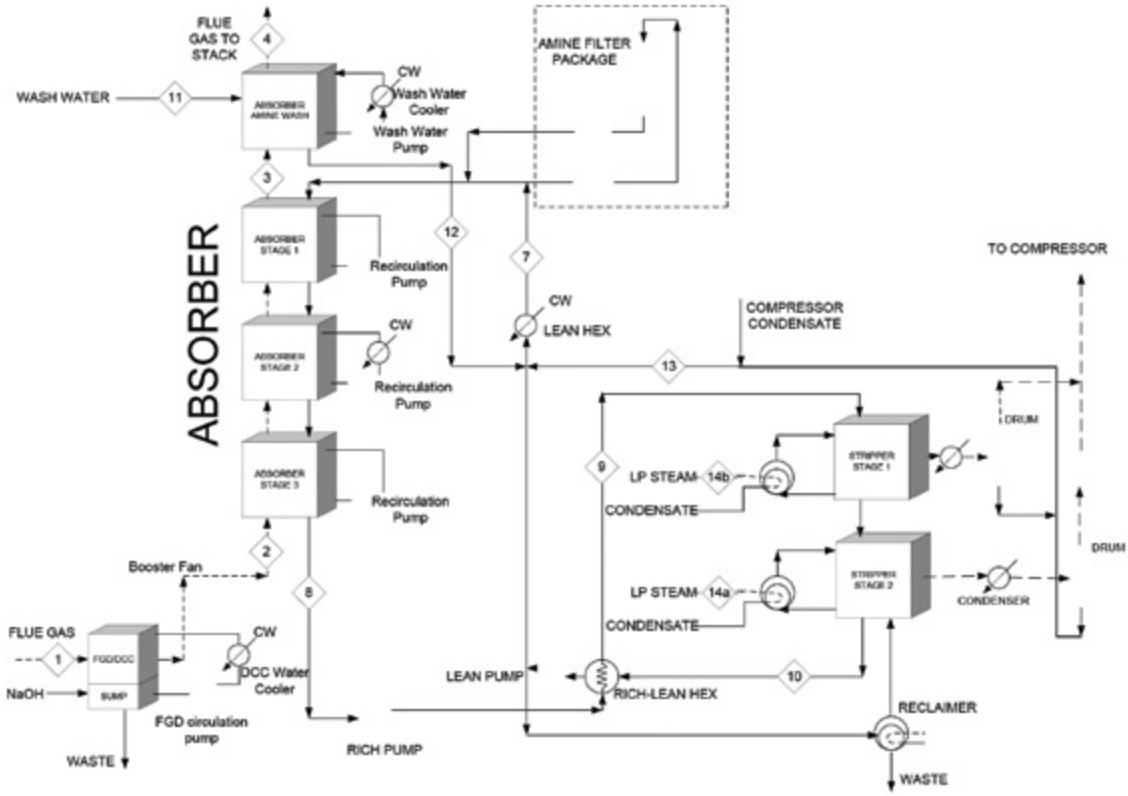

Figure 3: Process Flow Diagram of CARE System

Proposed Module Design – The system layout is shown above in Figure 1, where Ozone is introduced upstream of a forced draft to oxidize nitric oxide (NO_x) to more soluble components. The fan moves the flue gas through a heat exchanger to heat the slipstream flow back up to a representative temperature (350°F). The flue gas then passes through a second heat exchanger, which heats loaded solvent and reduces steam usage in the regeneration subsystem. The flue gas will then pass through an FGD system to reduce the SO_x concentration to 15 ppm and the NO_x by 80 to 90 percent. A polishing/direct contact cooler (DCC) scrubber is used to further reduce the SO_x to 1 ppm, and to cool the flue gas to <35°C. After the polishing/DDC scrubber, the gas passes through a four-unit CO_2 absorber (shown in Figure 3), where each unit has three stages. This 12-stage absorber reduces the CO_2 by 90 percent prior to contacting the flue gas with an amine wash, which cleans the amine slip from the gas before reintroducing it into the plants main flue gas stream.

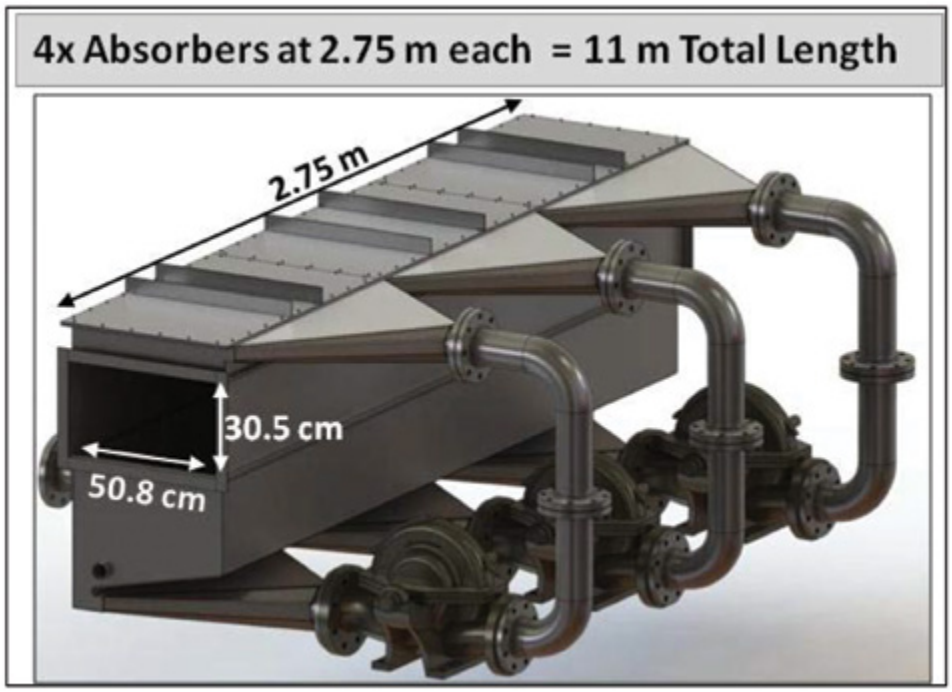

Figure 4: Solid Model of One of Four Absorber Stages Utilized in Project CARE
(The 11-m absorber length will not change with a commercial system; only the cross sectional area where the gas enters the absorber will increase.)

The regeneration system contains all typical components, such as cross heat exchangers, solvent cooler exchanger, rich pump, reclaimer, and condenser. A custom-designed stripper vessel is utilized in expectation of lowering steam usage during operation. Additionally, approximately 10 percent of the rich flow is directed to a lower-pressure flash vessel to desorb the CO_2 from the solvent using only heat provided by the flue gas.

technology advantages

- The NeuStream-C technology integrates a novel absorber design with an advanced solvent, leading to savings in both capital and operating costs compared to conventional systems.
- The high surface areas of the jets and low-pressure drop in the absorber have the potential to lower the capital cost of the absorber considerably, leading to significant reductions in the increase in levelized cost of electricity (LCOE) over MEA.
- The NeuStream-C technology incorporates solvent regeneration at high pressures, leading to lower-compression requirements.
- The CARE system will utilize an alternative NO_x-removal strategy to demonstrate the viability of this option over selective catalytic reductions (SCRs).
- The CARE system will utilize a flue gas heat-recovery strategy to reduce the steam usage in the regeneration subsystem.
- A novel stripper design developed by NSG with Drs. Rochelle and Chen at the University of Texas will be incorporated into the CARE system in an attempt to minimize steam usage.

R&D challenges

- Ensuring optimal dispersion of gas in the absorber, avoiding gas bypassing the jets in large-scale absorbers may be an issue and is being addressed via modeling.
- Results from tests on the design verification stand indicate that the surface area decreased significantly with jet length; this may lead to larger absorbers, increasing capital costs. It is possible this decrease is due to the wall effects that become more prevalent at longer jet lengths in the design verification test stand.

results to date/accomplishments

- Results from the Energy and Environmental Research Center (EERC) tests using a flue gas flow rate of 160 standard cubic feet per minute (SCFM) demonstrated high specific surface areas of 250 to 300 m^2/m^3 with low-system pressure-drop (0.0361 psi/m of jet or 2.94 mbar/m of jet) with high CO_2 capture efficiencies (up to 89%).
- Techno-economic analysis of the NeuStream-C by EERC indicated that the increase in LCOE over a sub-critical power plant without CO_2 capture would be approximately 40 percent, and the cost of CO_2 capture is at $28.50/ton.
- A design verification and testing (DVT) stand (300 to 2200 SCFM gas flow rate) was used to validate the preliminary design of the 0.5-MW CARE unit (absorber, pumps, heat exchangers, strippers) and was completed by NSG.
- It was found that wire meshes and directional vanes at the entrance resulted in an optimal dispersion of gas in the absorber by conducting CFD simulations.
- Investigations of the effects of jet length, gas velocity, nozzle spacing, and nozzle pressure on the CO_2 capture efficiency and the rate of CO_2 absorption in the DVT stand demonstrated high surface areas (300 to 450 m^2/m^3) for 22- to 12-inch long jets, respectively.

next steps

- Work is still ongoing to reduce the perceived wall losses and maximize the specific surface area utilized in the 0.5-MW demonstrator.
- A next generation low-flow nozzle is being developed that will reduce the parasitic power of the absorber system while maintaining a high contact area.
- The CARE pilot system has completed its final design review and is expecting to start BP2 in May 2013, which involves construction of the system.

available reports/technical papers/presentations

Brasseur, J., and Awtry, A., "Compact absorber retrofit equipment (CARE)," presented at the 2012 NETL CO_2 Capture Technology Meeting, July 2012, Pittsburgh, PA. *http://www.netl.doe.gov/publications/proceedings/12/co2capture/presentations/2-Tuesday/2-Brasseur-NeumannSG.pdf*.

Bishnoi, S., and Rochelle, G. T., "Absorption of carbon dioxide into aqueous piperazine: reaction kinetics, mass transfer and solubility," Chemical Engineering Science 55 (2000) 5531-5543.

COMBINED PRESSURE AND TEMPERATURE CONTRAST SEPARATION OF CARBON DIOXIDE FOR POST-COMBUSTION CARBON CAPTURE

technology maturity:
Bench-Scale, Simulated Flue Gas

project focus:
Hybrid Absorption/Stripper Process

participant:
William Marsh Rice University

project number:
FE0007531

NETL project manager:
Elaine Everitt
elaine.everitt@netl.doe.gov

principal investigator:
George Hirasaki
William Marsh Rice University
gjh@rice.edu

partners:
N/A

performance period:
10/1/11 – 9/30/14

primary project goals

Rice University is developing a hybrid carbon dioxide (CO_2) absorption process combining absorber and stripper columns using a high surface area ceramic foam gas-liquid contactor for enhanced mass transfer and utilizing waste heat for regeneration. The project includes bench-scale testing of the system.

technical goals

- Combine absorber and stripper columns into a single, integrated process unit.
- Use vacuum stripping in combination with waste heat for regeneration.
- Determine best absorbent and operating conditions for the process.

technical content

The project includes investigating the following concepts:

- Combining the absorber and stripper columns into a single, integrated unit to mitigate space availability constraints.
- The use of vacuum stripping in combination with waste heat for regeneration of CO_2 absorbent.
- The use of a high surface area ceramic foam gas-liquid contactor for enhanced mass transfer.
- Determining the best absorbent and operating conditions for the process.
- Effect of the addition of a co-solvent on reboiler energy duty and CO_2 absorption kinetics.

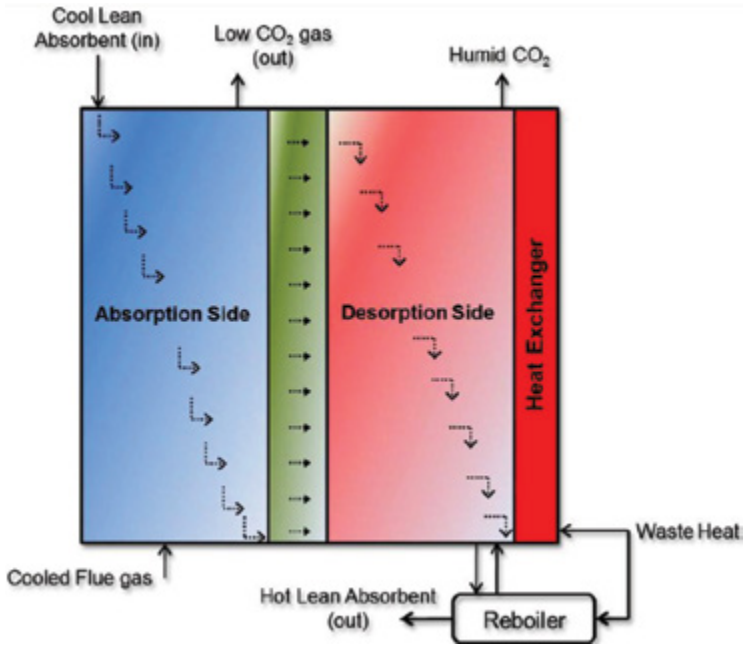

Figure 1: Schematic of Combined Pressure and Temperature Contrast and Surface-Enhanced Separation of CO_2

A bench-scale prototype of the gas absorption process will be developed to study various aspects of fluid flow in the system. A simulation model for the process is also being developed to optimize the properties of ceramics being used and the process operating conditions.

The expected outcomes of this project include significant reduction in the capital and operating costs of the gas absorption process and a resulting decrease in cost of electricity (COE). The use of waste heat instead of high-quality steam provides a significant reduction in operating costs. An integrated absorber and stripper unit substantially reduces capital costs.

Parameter Descriptions:

Chemical/Physical Solvent Mechanism – High surface area ceramic foam gas-liquid contactor for enhanced mass transfer.

Solvent Contaminant Resistance – This novel process uses advanced gas-liquid contactor materials called "ceramic foams." Ceramic foams have dual porosity (large, visible macropores and microscopic pores in the ceramic matrix) and can be made from a variety of materials (the ones being used currently are made of 99.5 percent α-alumina [Al_2O_3], which has excellent heat and chemical resistance). In the future, the cost of these materials can be reduced significantly by working with cheaper ceramics, such as silica.

Solvent Foaming Tendency – To be determined.

Flue Gas Pretreatment Requirements – As with all membrane processes, particulates (both those that enter with flue gas and solids formed due to side-reactions in the absorbent) can reduce the system performance. Since this research is currently at bench-scale, the effects of particulates cannot be conclusively commented on. However, based on the understanding of the system, it is not anticipated to be a severe problem.

Solvent Make-Up Requirements – To be determined.

Waste Streams Generated – Since work will continue with conventional amine absorbents, production of any waste streams is not anticipated, other than those already handled at amine absorption units.

technology advantages

- Waste heat used for absorbent regeneration significantly reduces parasitic duty for a power plant and will limit the increase in COE.
- Operating the desorber at lower temperatures decreases amine losses and equipment corrosion problems.
- Addition of a co-solvent to the amine absorbent can potentially reduce the energy consumption for regeneration.

R&D challenges

- Scalability.
- Lack of published literature describing the performance of ceramic foams as tower packing.
- Lack of process model.
- Pairing a conventional absorption process with a vacuum stripper.
- Lack of thermodynamic data and models to describe the effects of co-solvents.

results to date/accomplishments

- Studied hydrodynamic properties of off-the-shelf alumina foams purchased from commercial supplier.
- Compared the CO_2-pickup performance of 20-, 30-, and 45-ppi alumina foam with that of 6-mm Raschig rings; also estimated the performance for 25-mm Raschig rings. Estimates show that 20-ppi ceramic foam has a better performance than the 25-mm Raschig rings.
- Performed an initial technical and economic feasibility study to demonstrate that the process proposed by the Rice University team has a capital cost comparable to that of the Fluor Econamine process and results in significantly lower COE with the use of waste heat.
- Completed design for bench-scale combined absorption/desorption unit.
- Demonstrated CO_2 absorption and desorption using 30 wt% Diglycolamine in an integrated absorber-stripper unit made with stainless steel.

next steps

Develop a model to simulate and optimize system performance.

available reports/technical papers/presentations

"Combined Pressure and Temperature Contrast and Surface-Enhanced Separation of Carbon Dioxide for Post-Combustion Carbon Capture," presented at the 2012 NETL CO_2 Capture Technology Meeting, Pittsburgh, Pennsylvania, July 2012.
http://www.netl.doe.gov/File%20Library/events/2012/co2%20capture%20meeting/G-Hirasaki-Rice-Combined-Separations.pdf

DEVELOPMENT OF A NOVEL GAS-PRESSURED STRIPPING (GPS) PROCESS-BASED TECHNOLOGY FOR CO_2 CAPTURE FROM POST-COMBUSTION FLUE GASES

primary project goals

Carbon Capture Scientific is performing bench-scale development, testing, and computer simulations of a novel solvent-based carbon dioxide (CO_2) capture technology, known as a Gas-Pressurized Stripping (GPS) Process. The GPS technology has the potential to significantly reduce the energy penalty associated with solvent regeneration and compression by operating the regeneration step at higher pressures, which in turn reduces the compression requirements for CO_2 storage.

technical goals

- Computer simulation to predict GPS column performance under different operating conditions.
- Experimental validation of use of a modified commercial solvent system in the GPS process to ensure that it can perform efficiently under process conditions.
- Documentation of experimental results and obtaining necessary information to progress the technology.

technical content

Carbon Capture Scientific is developing and testing a novel, proprietary, GPS process-based technology for CO_2 capture from post-combustion flue gases. The project will conduct individual unit bench-scale tests for four major process components, including a first absorption column, a GPS column, a second absorption column, and a flash vessel, as well as bench-scale tests for an integrated continuous GPS system test at the National Carbon Capture Center (NCCC). The overall objective is to reduce the energy consumption of the CO_2 stripping process and the subsequent compression, leading to overall reduced costs. A computer simulation task will be carried out to study the GPS column behavior under different operating conditions, optimizing the column design and operating conditions. Two additional computer simulation tasks will then be performed to optimize the GPS process for both an existing and new power plant. A solvent stability study will collect information on the solvent operating cost when a modified, commercially available solvent is used in the GPS process. Figure 1 is a flow chart for the single-solvent GPS process. Table 1 lists the process parameters relevant to the GPS process.

technology maturity:

Bench-Scale, Simulated Flue Gas

project focus:

Gas-Pressurized Stripping

participant:

Carbon Capture Scientific

project number:

FE0007567

NETL project manager:

Andrew Jones
andrew.jones@netl.doe.gov

principal investigator:

Shiaoguo (Scott) Chen
Carbon Capture Scientific, LLC
scottchen@carboncapturescientific.com

partners:

CONSOL Energy Inc
Nexant Inc
Western Kentucky University

performance period:

10/1/11 – 9/30/14

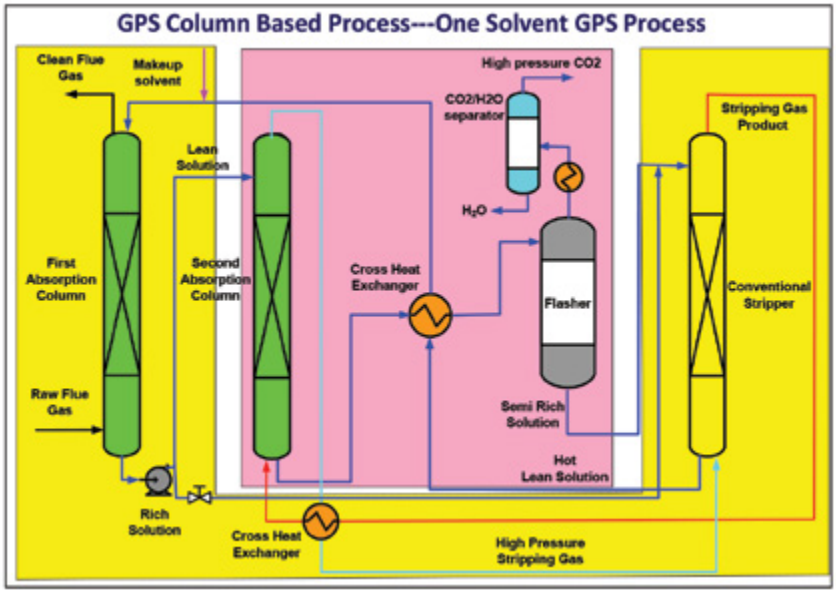

Figure 1: GPS-Based Absorption/Stripping Process – Single Solvent

TABLE 1: PROCESS PARAMETERS

	Units	Current R&D Value	Target R&D Value
Pure Solvent			
Molecular Weight	mol^{-1}	Varied	Varied
Normal Boiling Point	°C	Varied	Varied
Normal Freezing Point	°C	Varied	Varied
Vapor Pressure @ 15°C	bar	Varied	Varied
Manufacturing Cost for Solvent	$/kg	Varied	Varied
Working Solution			
Concentration	kg/kg	3.8	5.0
Specific Gravity (15°C/15°C)	-		
Specific Heat Capacity @ STP	kJ/kg-K	ca. 3	ca. 3
Viscosity @ STP	cP		
Absorption			
Pressure	bar	1	1
Temperature	°C	40	40
Equilibrium CO_2 Loading	mol/mol	Varied	Varied
Heat of Absorption	kJ/mol CO_2	Varied	Varied
Solution Viscosity	cP	6	6
Desorption			
Pressure	bar	10	10
Temperature	°C	120	130
Equilibrium CO_2 Loading	mol/mol	Varied	Varied
Heat of Desorption	kJ/mol CO_2		

TABLE 1: PROCESS PARAMETERS

	Units	Current R&D Value	Target R&D Value
Proposed Module Design		*(for equipment developers)*	
Flue Gas Flowrate	kg/hr	40	
CO_2 Recovery, Purity, and Pressure	% / % / bar	90%, >95%, 10 bar	
Adsorber Pressure Drop	bar	0	
Estimated Absorber/Stripper Cost of Manufacturing and Installation	$\frac{\$}{kg/hr}$	$500,000	

Definitions:

STP – Standard Temperature and Pressure (15°C, 1 atm).

Pure Solvent – Chemical agent(s), working alone or as a component of a working solution, responsible for enhanced CO_2 absorption (e.g., the amine MEA in an aqueous solution).

Manufacturing Cost for Solvent – "Current" is market price of chemical, if applicable; "Target" is estimated manufacturing cost for new solvents, or the estimated cost of bulk manufacturing for existing solvents.

Working Solution – The solute-free (i.e., CO_2-free) liquid solution used as the working solvent in the absorption/desorption process (e.g., the liquid mixture of MEA and water).

Absorption – The conditions of interest for absorption are those that prevail at maximum solvent loading, which typically occurs at the bottom of the absorption column. These may be assumed to be 1 atm total flue-gas pressure (corresponding to a CO_2 partial pressure of 0.13 bar) and 40°C; however, measured data at other conditions are preferable to estimated data.

Desorption – The conditions of interest for desorption are those that prevail at minimum solvent loading, which typically occurs at the bottom of the desorption column. Operating pressure and temperature for the desorber/stripper are process-dependent (e.g., an MEA-based absorption system has a typical CO_2 partial pressure of 1.8 bar and a reboiler temperature of 120°C). Measured data at other conditions are preferable to estimated data.

Pressure – The pressure of CO_2 in equilibrium with the solution. If the vapor phase is pure CO_2, this is the total pressure; if it is a mixture of gases, this is the partial pressure of CO_2. Note that for a typical PC power plant, the total pressure of the flue gas is about 1 atm and the concentration of CO_2 is about 13.2 percent. Therefore, the partial pressure of CO_2 is roughly 0.132 atm or 0.130 bar.

Concentration – Mass fraction of pure solvent in working solution.

Loading – The basis for CO_2 loadings is moles of pure solvent.

Estimated Cost – Basis is kg/hr of CO_2 in CO_2-rich product gas; assuming targets are met.

Other Parameter Descriptions:

Chemical/Physical Solvent Mechanism – PS is a process applicable to different types of solvents. Chemistry of the GPS-based absorption/stripping process depends on the solvent used in the process. In the proposed research, a modified commercially available amine solvent will be used. Therefore, the chemistry of the amine-based CO_2 capture process will apply to the GPS-based process.

The reaction kinetics of the GPS-based process also depends on the solvent selected. With the solvent currently selected, it is believed that the reaction kinetics of the modified commercially available solvent will perform better than the baseline monoethanolamine (MEA) process.

Solvent Contaminant Resistance – Since the selected solvent is an amine-based solvent, it will share common issues that other amine-based solvents have. Sulfur oxide (SO_x) and nitrogen oxide (NO_x) could be the major contaminants in flue gas, which will be detrimental to all amine-based solvents, including the solvent used in this process. Similar to other amine-based solvents, pre-treatment of flue gas will be required to minimize amine degradations.

Solvent Foaming Tendency – The solvent is a commercially available solvent, with different strength. The solvent forming tendency should be manageable based on industrial experience.

Flue Gas Pretreatment Requirements – No special heating/cooling methods are required in the GPS-based absorption/stripping process. Steam will be used to heat solvent indirectly, and cooling water will be used to cool solvent indirectly whenever solvent cooling is required.

Solvent Make-Up Requirements – Solvent stability study has demonstrated that this commercially available solvent will have solvent make-up rate of 1 kg solvent/tonne CO_2.

Waste Streams Generated – Waste stream of the GPS-based process is also similar to other amine-based absorption/stripping processes. The main waste material is amine degradation products.

Process Design Concept – Flowsheet/block flow diagram of the GPS process is shown in Figure 1. It is virtually a combination of two conventional absorption/stripping process, with the second one being inserted into the first one. This process configuration will be able to save sensible heat.

Proposed Module Design – Unless noted, flue gas feed pressure is 1.014 bara, temperature is 57°C, and composition leaving the flue gas desulfurization (FGD) unit (wet basis) should be assumed:

Composition (% vol)					Composition (ppmv)	
CO_2	H_2O	N_2	O_2	Ar	SO_x	NO_x
13.17	17.25	66.44	2.34	0.8	42	74

technology advantages

- The use of the off-the-shelf process equipment will accelerate the process development.
- The use of absorption/stripping technology would be suitable for low-cost, large-scale applications.
- The higher stripper operating pressure results in much less sensible heat requirement and less subsequent compression work.
- High-energy efficiency of the process due to application of the GPS concept.
- The GPS technology is flexible in terms of operating pressures and temperatures, and is applicable to different types of solvents.

R&D challenges

The major challenge of the GPS-based process is its high capital cost. The GPS-based process has one more absorption/stripping step and thus leads to a higher capital cost than the baseline process. However, introduction of several novel process concepts has reduced the capital cost of the GPS-based process to less than 120 percent of the baseline capital cost. New process equipment, which has the potential to significantly reduce capital cost, is also being tested.

results to date/accomplishments

- Computer simulation achieved GPS column thermal efficiency of 79 percent.
- Computer simulations indicated that overall process energy performance of 0.20 kWh/kgCO_2.
- All the four individual unit bench-scale tests have been completed.
- GPS column tests demonstrated that the thermal efficiency of the GPS column can achieve over 70 percent.
- Thermal stability of the selected solvent has been tested and solvent loss was found to be lower than 1 kg/ton CO_2, exceeding the target.
- Oxidative stability tests of the solvent have been completed and the results showed negligible oxidative degradation.
- A preliminary techno-economic analysis has been conducted and the results showed that a levelized cost of electricity (LCOE) increase of 61 percent over the baseline can be achieved.

next steps

- Using computer simulation to further optimize GPS process to reduce capital cost.
- Establish a continuous GPS system skid to conduct shakedown tests and real flue gas tests at NCCC.
- Conduct individual unit test for two intensified process equipment to validate its applicability to post-combustion CO_2 capture.
- Set up a system to measure the corrosiveness of the selected solvent at different operating conditions.
- Refine the process simulation results for GPS-based technology to optimize the overall economic performance of the GPS-based process.

available reports/technical papers/presentations

N/A

CO_2-BINDING ORGANIC LIQUIDS GAS CAPTURE WITH POLARITY-SWING-ASSISTED REGENERATION

technology maturity:

Laboratory-Scale, Simulated Flue Gas

project focus:

CO_2BOLs with Polarity-Swing-Assisted Regeneration

participant:

Battelle Memorial Institute

project number:

FE0007466

NETL project manager:

I. Andrew Aurelio
isaac.aurelio@netl.doe.gov

principal investigator:

David Heldebrant
Battelle Memorial Institute
david.heldebrant@battelle.org

partners:

The Fluor Corporation
Queens University

performance period:

10/1/11 – 3/31/14

primary project goals

The primary project goal is to determine design parameters for scale-up of a carbon dioxide (CO_2) capture process using novel non-aqueous switchable organic solvents (CO_2-binding organic liquids [CO_2BOLs]) by conducting bench-scale studies, and to evaluate the effectiveness of polarity-swing-assisted regeneration (PSAR) in lowering temperatures and energies required for CO_2 separation.

technical goals

- Measure solvent state-point data (specific heat, density, vapor pressure, and viscosity).
- Measure CO_2 loading in the solvent at various temperatures, pressures, water content, and anti-solvent compositions.
- Measure kinetics of CO_2 absorption using a wetted-wall column (WWC).
- Develop and verify the performance of coupling CO_2BOLs with PSAR.
- Conduct an initial techno-economic assessment using simulation tools to assess feasibility.

technical content

CO_2BOLs are a class of switchable ionic liquids (ILs; i.e., molecular liquids which become ionic in the presence of CO_2) having lower specific heat capacities and higher CO_2 working capacities compared to aqueous amines, resulting in potential savings in the sensible heat required to strip CO_2.

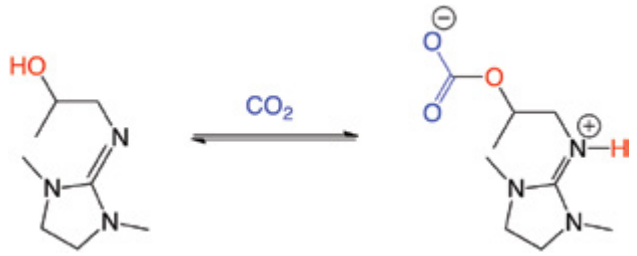

Figure 1: Uptake of CO_2 by Alkanolguanidine BOL (left), and Formation of Zwitterionic CO_2BOL (right)

Similar to aqueous amines, CO_2BOLs are basic, but the base (e.g., guanidine, amidine) does not directly react with CO_2. Instead, the alcohol component reacts with CO_2, forming alkyl carbonic acid, and subsequently transfers a proton to the base, forming liquid alkylcarbonate. The current generation of CO_2BOLs combine the base and the alcohol moieties in a single molecule, lowering volatility (Figure 1).

The addition of non-polar solvent (anti-solvent) to CO_2BOLs and other switchable solvents

during the solvent regeneration destabilizes bound CO_2, thus potentially lowering the temperature at which the stripper can be operated (PSAR). Preliminary results indicate that PSAR could reduce the regeneration temperatures of CO_2BOLs by more than 20°C. This allows novel possibilities for heat integration, such as transferring heat from the absorber to the stripper using heat pumps, thereby lowering steam demand for solvent regeneration. The anti-solvent can be separated out from the CO_2BOL by cooling and liquid-liquid phase separation. A schematic of the CO_2BOL-PSAR process is shown in Figure 2.

Previous generations of single-component CO_2BOLs were highly viscous before CO_2 absorption. The current generation of alkanolguanidine CO_2BOL has lower viscosity before CO_2 absorption (Table 1).

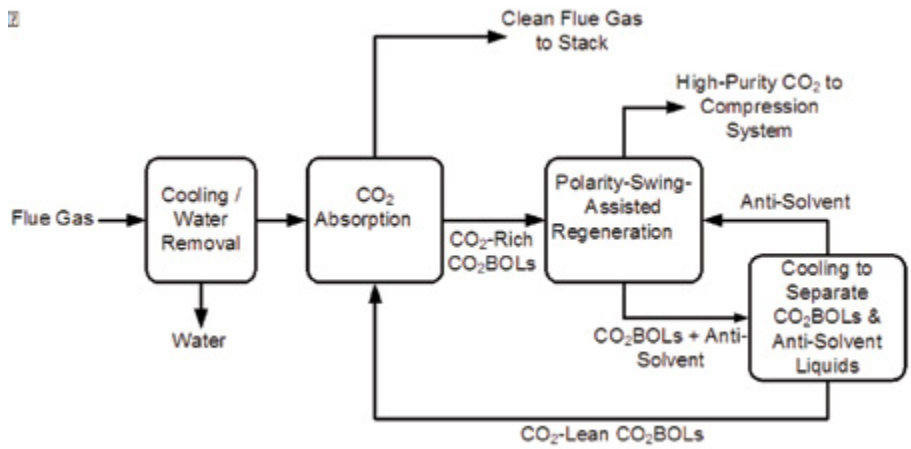

Figure 2: CO_2BOL Absorption and Polarity-Swing-Assisted Regeneration (PSAR) Process

TABLE 1: PROCESS PARAMETERS FOR CO_2BOL SOLVENTS

	Units	Current R&D Value	Target R&D Value
Pure Solvent		CO_2BOL (3)	CO_2BOL (3)
Molecular Weight	mol^{-1}	171.14	171.14
Normal Boiling Point	°C	262 (decomposes >200)	262 (decomposes >200)
Normal Freezing Point	°C	< 0	< 0
Vapor Pressure @ 15°C	bar	0.179 (37°C) (DBU) 0.009 (Butanol)	0.0001
Working Solution			
Concentration	kg/kg	1 (anhydrous) 0.91 (hydrated)	1 (anhydrous) 0.91 (hydrated)
Specific Gravity (15°C/15°C)	-	1.03	1.03
Specific Heat Capacity @ STP	kJ/kg-K	1.9	1.9
Viscosity @ STP	cP	1.9 (CO_2-free solvent) 50 (lean solvent)	1.9 (CO_2-free solvent) 11 (lean solvent)
Surface Tension @ STP	dyn/cm	Not measured	Unknown
Absorption			
Pressure	bar	1 (near atmospheric, 0.15 bar CO_2 partial pressure)	1 (near atmospheric, 0.15 bar CO_2 partial pressure)
Temperature	°C	40	40
Equilibrium CO_2 Loading	mol/mol	0.5 (at 0.15 bar CO_2 partial pressure)	0.5 (at 0.15 bar CO_2 partial pressure)
Heat of Absorption	kJ/mol CO_2	-80 (anhydrous) -90 (hydrated)	-80 (anhydrous) -90 (hydrated)
Solution Viscosity	cP	400 (anhydrous 40°C) 500 (hydrated 40°C)	< 20 (anhydrous) < 20 (hydrated)

TABLE 1: PROCESS PARAMETERS FOR CO_2BOL SOLVENTS

	Units	Current R&D Value	Target R&D Value
Desorption			
Pressure	bar	2	2
Temperature	°C	120 (thermal only) <100 (PSAR)	<100 (thermal only) 75 (PSAR)
Equilibrium CO_2 Loading	mol/mol	0.25°	0.25
Heat of Desorption	kJ/mol CO_2	-80 (anhydrous) -90 (hydrated)	-80 (anhydrous) -90 (hydrated)

Definitions:

STP – Standard Temperature and Pressure (15°C, 1 atm).

Pure Solvent – Chemical agent(s), working alone or as a component of a working solution, responsible for enhanced CO_2 absorption (e.g., the amine monoethanolamine [MEA] in an aqueous solution).

Manufacturing Cost for Solvent – "Current" is market price of chemical, if applicable; "Target" is estimated manufacturing cost for new solvents, or the estimated cost of bulk manufacturing for existing solvents.

Working Solution – The solute-free (i.e., CO_2-free) liquid solution used as the working solvent in the absorption/desorption process (e.g., the liquid mixture of MEA and water).

Absorption – The conditions of interest for absorption are those that prevail at maximum solvent loading, which typically occurs at the bottom of the absorption column. These may be assumed to be 1 atm total flue-gas pressure (corresponding to a CO_2 partial pressure of 0.13 bar) and 40°C; however, measured data at other conditions are preferable to estimated data.

Desorption – The conditions of interest for desorption are those that prevail at minimum solvent loading, which typically occurs at the bottom of the desorption column. Operating pressure and temperature for the desorber/stripper are process-dependent (e.g., an MEA-based absorption system has a typical CO_2 partial pressure of 1.8 bar and a reboiler temperature of 120°C). Measured data at other conditions are preferable to estimated data.

Pressure – The pressure of CO_2 in equilibrium with the solution. If the vapor phase is pure CO_2, this is the total pressure; if it is a mixture of gases, this is the partial pressure of CO_2. Note that for a typical pulverized-coal power plant, the total pressure of the flue gas is about 1 atm and the concentration of CO_2 is about 13.2 percent. Therefore, the partial pressure of CO_2 is roughly 0.132 atm or 0.130 bar.

Concentration – Mass fraction of pure solvent in working solution.

Loading – The basis for CO_2 loadings is moles of pure solvent.

Estimated Cost – Basis is kg/hr of CO_2 in CO_2-rich product gas; assuming targets are met.

Other Parameter Descriptions:

Chemical Solvent Mechanism – Chemical reaction for the CO_2 capture process is shown in Figure 1.

Solvent Contaminant Resistance – Tests of CO_2BOL reactivity with hydrogen chloride (HCl), sulfur oxide (SO_x) and nitrogen oxide (NO_x) are to be conducted. In general, CO_2BOLs form heat-stable salts (HSS) with sulfur dioxide (SO_2), NO_x, and HCl. The solvent can be recovered from the HSS using caustic wash or with ion exchange resins. Levels of HSS formation are expected to be similar to that of MEA. Minimal adverse impacts due to arsenic and mercury in the flue gas are expected.

Solvent Foaming Tendency – Foaming tendency has not been tested and is unknown at this time.

Flue Gas Pretreatment Requirements – Water management with the alkanolguanidine CO_2BOL is different from that of MEA. The presence of water increases solution viscosity and increases the energy required to regenerate the CO_2BOL. A refrigeration unit

is needed to eliminate most of the water prior to CO_2 absorption. Other flue gas pretreatment requirements (for acid-gas contaminants) are expected to be similar to those with MEA.

Solvent Make-up Requirements – Until a formal lifetime analysis can be made, the estimated make-up rate of CO_2BOLs will depend on the anticipated thermal and chemical degradations. Currently, evaporative losses are projected to be 40 kg per annum.

Waste Streams Generated – CO_2BOLs have lower vapor pressure than MEA, and post-absorber CO_2BOL emissions would be at lower levels (0.7 parts per billion [ppb]). Other major waste streams may include stripper wastes and reclaimer wastes.

Process Design Concept – Flowsheet/block flow diagram, if not included above.

Proposed Module Design – Unless noted, flue gas feed pressure is 1.014 bara, temperature is 57°C, and composition leaving the flue gas desulfurization (FGD) unit (wet basis) should be assumed:

Composition (% vol)					Composition (ppmv)	
CO_2	H_2O	N_2	O_2	Ar	SO_x	NO_x
13.17	17.25	66.44	2.34	0.8	42	74

technology advantages

- Lower solvent specific heat and water content, leading to smaller parasitic load than current solvents (MEA).
- Lower solvent evaporative losses and thermal degradation, which may lead to lower cost of CO_2 capture.
- The rates of liquid-phase mass-transfer kinetics with CO_2BOLs are slower than, but comparable to, current solvents (5M MEA). Liquid-film mass-transfer kinetics were measured with 1:1 DBU-hexanol CO_2BOL solvent, which has similar viscosity to the current 3rd generation cyclic guanidine-based CO_2BOL represented in Figure 1.
- PSAR may enable low-temperature CO_2BOL regeneration, reducing the pressure of low-pressure steam used for regeneration, thereby increasing net-power production.
- Heat integration possibilities with PSAR and CO_2BOLs may have minimal impact on steam plant cycles, facilitating retrofits for existing plants.

R&D challenges

- The estimated cost of manufacturing the current-generation CO_2BOL solvent is high, leading to high operation costs.
- High viscosity of CO_2BOL at high-CO_2 loadings relevant to absorber operation (≈500 cP at 40°C and 10 percent w/w CO_2) may affect mass and heat transfer in the absorber and the heat exchangers, increasing capital costs.
- Water absorption by the CO_2BOL requires the amount of water in the flue gas to be reduced significantly by refrigeration to avoid water build-up in the solvent recirculation loop. This leads to higher capital costs and auxiliary electric loads compared to current solvents.

results to date/accomplishments

- Successfully synthesized an alkanolguanidine CO_2BOL (Figure 1) with low-volatility, excellent water tolerance, and low pure-solvent viscosity.
- WWC kinetic studies indicate that DBU-hexanol CO_2BOL reacts at rates slower than, but similar to, that of MEA.
- Demonstrated the tuning of CO_2BOL CO_2 capture by adjusting the temperature of the CO_2BOL-anti-solvent separation step and the choice of the anti-solvent.
- Conducted a preliminary assessment of health, safety, and environmental impacts of CO_2BOL, and found that the solvent was not expected to have significant toxicity.
- Completed initial techno-economic analysis in Aspen, comparing MEA and the alkanolguanidine CO_2BOL solvent:

- Parasitic energy consumed by CO_2BOL was found to be 84 percent of the energy consumed using MEA as a solvent.
- Demonstrated that the levelized cost of electricity (LCOE) using CO_2BOL (without PSAR) is on parity with MEA.

next steps

- Anti-solvent/CO_2BOL blends would be optimized, and lower-cost synthesis routes would be evaluated by April 2014.
- Continuous bench-scale testing would be performed to assess the effects of higher-solvent viscosity at absorber operating conditions by April 2014.
- Techno-economic assessment of PSAR using process simulations would be finalized by April 2014.
- Several strategies to overcome high-solvent viscosity, including modified CO_2BOL chemistry and the use of anti-solvent as diluent, would be tested by April 2014.

available reports/technical papers/presentations

Heldebrant, David, "CO_2-Binding Organic Liquids, Enhanced CO_2 Capture Process with a Polarity-Swing-Assisted Regeneration," presented at the 2012 CO_2 Capture Technology Meeting, July 2012, Pittsburgh, PA. *http://www.netl.doe.gov/publications/proceedings/12/co2capture/presentations/2-Tuesday/D%20Heldebrant-Battelle-PSAR.pdf*

BENCH-SCALE DEVELOPMENT OF A HOT CARBONATE ABSORPTION PROCESS WITH CRYSTALLIZATION-ENABLED HIGH-PRESSURE STRIPPING FOR POST-COMBUSTION CO_2 CAPTURE

primary project goals

The Univirsity of Illinois at Urbana-Champaign (UIUC) is performing a proof-of-concept study that will generate process engineering and scale-up data to optimize the Hot Carbonate Absorption Process with Crystallization-Enabled High-Pressure Stripping (Hot-CAP) technology. The study will demonstrate its capability to achieve the U.S. Department of Energy (DOE) goals of at least 90 percent carbon dioxide (CO_2) removal from coal-fired power plant flue gas with less than a 35 percent increase in the cost of electricity (COE), helping to advance the process to pilot-scale level within three years.

technical goals

- Perform laboratory- and bench-scale tests to measure thermodynamic and reaction engineering data that will be used to evaluate technical feasibility and cost-effectiveness, performance of scale-up, and commercial competitiveness of the Hot-CAP process with Monoethanolamine (MEA)-based processes and other emerging post-combustion CO_2 capture technologies.
- A combination of experimental, modeling, process simulation, and technical and economic analysis studies will be performed.

technical content

For this three-year project, UIUC and Carbon Capture Scientific, LLC will investigate a Hot-CAP to overcome the energy use disadvantage of the MEA-based processes. A preliminary technical-economic evaluation shows that the energy use of the Hot-CAP is about 40 percent less than that of its MEA counterpart, and the process has the potential to meet or exceed DOE's technical and cost goals of greater than or equal to 90 percent CO_2 removal and less than or equal to a 35 percent increase in the COE.

The Hot-CAP is an absorption-based, post-combustion CO_2 technology that uses a carbonate salt (K_2CO_3 or Na_2CO_3) as a solvent. The process integrates a high-temperature (70 to 80°C) CO_2 absorption column, a slurry-based high-pressure (up to 40 atm) CO_2 stripping column, a crystallization unit to separate bicarbonate and recover the carbonate solvent, and a reclaimer to recover $CaSO_4$ as the byproduct of the sulfur dioxide (SO_2) removal.

Project objectives include performing a proof-of-concept study aimed at generating process

technology maturity:

Laboratory-Scale, Simulated Flue Gas

project focus:

Hot Carbonate Absorption with Crystallization-Enabled High-Pressure Stripping

participant:

University of Illinois at Urbana-Champaign

project number:

FE0004360

NETL project manager:

Andrew Jones
andrew.jones@netl.doe.gov

principal investigator:

Yongqi Lu
University of Illinois at Urbana-Champaign
yongqilu@illinois.edu

partners:

Carbon Capture Scientific, LLC

performance period:

1/1/11 – 3/31/14

engineering and scale-up data to help advance the Hot-CAP technology to pilot-scale demonstration level within three years. The project tasks employ lab- and bench-scale test facilities to measure thermodynamic and reaction engineering data that can help evaluate technical feasibility and cost-effectiveness, performance of scale-up, and commercial competitiveness of the Hot-CAP compared to the MEA-based processes and other emerging post-combustion CO_2 capture technologies.

To meet project objectives, lab- and bench-scale tests will be performed by UIUC to measure the kinetics and phase equilibrium data associated with the major reactions and unit operations in the Hot-CAP, including CO_2 absorption, bicarbonate crystallization, sulfate recovery, and CO_2 stripping. Carbon Capture Scientific, LLC will use the results from the lab- and bench-scale studies to help create a process flow diagram, perform equipment and process simulations, and conduct a techno-economic study for a conceptual 550-MWe high-sulfur coal-fired power plant retrofitted with the Hot-CAP.

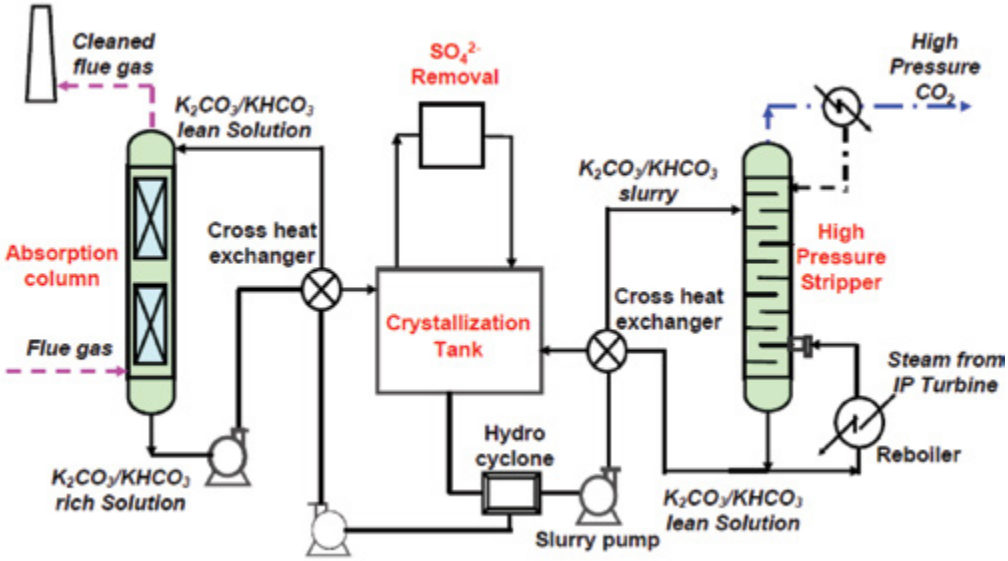

Figure 1: Hot Carbonate Absorption Process with High-Pressure Stripping Enabled by Crystallization (Hot-CAP): Process Flow Diagram

TABLE 1: PROCESS PARAMETERS FOR CARBONATE SALT SOLVENT

(based on 40wt% [K_2CO_3-equivalent] $K_2CO_3/KHCO_3$ solution)

	Units	Current R&D Value	Target R&D Value
Pure Solvent			
Molecular Weight	mol^{-1}	138 g/mol	N/A
Normal Boiling Point	°C	105-115 (depending on % K_2CO_3 to $KHCO_3$ conversion, i.e., CO_2 loading)	N/A
Normal Freezing Point	°C	<0 (estimated)	N/A
Vapor Pressure @ 15°C	bar	N/A (not volatile)	N/A
Manufacturing Cost for Solvent	$/kg	0.4-1.0 (dry, pure K_2CO_3)	0.8
Working Solution			
Concentration	kg/kg	0.4	0.4
Specific Gravity (15°C/15°C)	-	1.42	N/A
Specific Heat Capacity @ STP	kJ/kg-K	2.72	N/A
Viscosity @ STP	cP	2.72	N/A
Absorption (Rich Solution at Bottom)			
Pressure (CO_2 partial)	bar	0.09 (1.32 psia)	<0.1
Temperature	°C	70-80	70-80
Equilibrium CO_2 Loading	mol/mol	0.4-0.45	0.4-0.45
Heat of Absorption	kJ/mol CO_2	609	609
Solution Viscosity	cP	2.75	N/A

TABLE 1: PROCESS PARAMETERS FOR CARBONATE SALT SOLVENT

(based on 40wt% [K_2CO_3-equivalent] $K_2CO_3/KHCO_3$ solution)

	Units	Current R&D Value	Target R&D Value
Desorption (Lean Solution at Bottom)			
Pressure (CO_2 partial)	bar	2-20	>7 (CO_2/H_2O > 3:1)
Temperature	°C	130-200	<200
Equilibrium CO_2 Loading	mol/mol	0.20	0.20
Heat of Desorption	kJ/mol CO_2	600-1,500 (included heat of crystallization)	<1,500
Proposed Module Design		*(for equipment developers)*	
Flue Gas Flowrate	kg/hr	500,000 (100,000 kg/hr CO_2)	
CO_2 Recovery, Purity, and Pressure	% / % / bar	90%, 99%, 10 bar	
Adsorber Pressure Drop	bar	0.03 (structured packing)	
Estimated Absorber/Stripper Cost of Manufacturing and Installation	$ / kg/hr	To be determined in techno-economic analysis	

Definitions:

STP – Standard Temperature and Pressure (15°C, 1 atm).

Pure Solvent – Chemical agent(s), working alone or as a component of a working solution, responsible for enhanced CO_2 absorption (e.g., the amine MEA in an aqueous solution).

Manufacturing Cost for Solvent – "Current" is market price of chemical, if applicable; "Target" is estimated manufacturing cost for new solvents, or the estimated cost of bulk manufacturing for existing solvents.

Working Solution – The solute-free (i.e., CO_2-free) liquid solution used as the working solvent in the absorption/desorption process (e.g., the liquid mixture of MEA and water).

Absorption – The conditions of interest for absorption are those that prevail at maximum solvent loading, which typically occurs at the bottom of the absorption column. These may be assumed to be 1 atm total flue-gas pressure (corresponding to a CO_2 partial pressure of 0.13 bar) and 40°C; however, measured data at other conditions are preferable to estimated data.

Desorption – The conditions of interest for desorption are those that prevail at minimum solvent loading, which typically occurs at the bottom of the desorption column. Operating pressure and temperature for the desorber/stripper are process-dependent (e.g., an MEA-based absorption system has a typical CO_2 partial pressure of 1.8 bar and a reboiler temperature of 120°C). Measured data at other conditions are preferable to estimated data.

Pressure – The pressure of CO_2 in equilibrium with the solution. If the vapor phase is pure CO_2, this is the total pressure; if it is a mixture of gases, this is the partial pressure of CO_2. Note that for a typical pulverized coal (PC) power plant, the total pressure of the flue gas is about 1 atm and the concentration of CO_2 is about 13.2 percent. Therefore, the partial pressure of CO_2 is roughly 0.132 atm or 0.130 bar.

Concentration – Mass fraction of pure solvent in working solution.

Loading – The basis for CO_2 loadings is moles of pure solvent.

Estimated Cost – Basis is kg/hr of CO_2 in CO_2-rich product gas; assuming targets are met.

Other Parameter Descriptions:

Chemical/Physical Solvent Mechanism – The overall reaction for CO_2 absorption into potassium carbonate solution at 70-80°C is:

$$K_2CO_3+CO_2+H_2O=2KHCO_3$$

The CO_2-rich solution from the absorber is cooled to 30 to 35°C to crystallize $KHCO_3$:

$$KHCO_3\ (aq) = KHCO_3\ (s)$$

The overall reaction for CO_2 stripping using $KHCO_3$ slurry at 140 to 200°C is:

$$2KHCO_3 = K_2CO_3+CO_2+H_2O$$

Solvent Contaminant Resistance – K_2CO_3 reacts with the flue gas contaminants (e.g., SO_2, nitrogen oxide [NO_x], and hydrogen chloride [HCl]), to form K_2SO_4, KNO_3, and KCl, resulting in solvent losses if the salts are not reclaimed.

Solvent Foaming Tendency – $K_2CO_3/KHCO_3$ solution itself does not have a foaming problem. If an organic promoter is used, foaming may occur for the $K_2CO_3/KHCO_3$ + promoter solution. However, the foaming tendency is expected to be less severe than the conventional amine-based processes because the promoter concentration is generally low.

Flue Gas Pretreatment Requirements – If an organic promoter is used, pretreatment of the flue gas is required to reduce the concentration of SO_2 to below 30 parts per million by volume (ppmv). If an inorganic promoter or a catalyst is used, flue gas pretreatment can be eliminated by a K_2SO_4 reclamation process under development in this project.

Solvent Make-Up Requirements – Stoichiometric loss of K_2CO_3 due to reactions with acidic gases in the flue gas (SO_2, NO_x, etc) is estimated 1.46 kg K_2CO_3/tonne CO_2 captured based on the assumed 42 ppmv SO_2 and 74 ppmv NO_x in the flue gas exiting a wet flue gas desulfurization (FGD) unit.

If an organic promoter is used, the promoter has tendency to degrade. Since the promoter concentration is low and most of the promoter doesn't enter the Hot-CAP stripping column, nominal losses due to promoter degradation is estimated to be about 10 percent of that in the conventional MEA-based processes.

Waste Streams Generated – Waste streams include sludge of inorganic salts (e.g., sulfate, nitrate, chloride, etc.) as a result of $K_2CO_3/KHCO_3$ reactions with acid gases in the flue gas and liquid blowdown from the process to avoid accumulation of chlorine, metals, etc.

Process Design Concept:

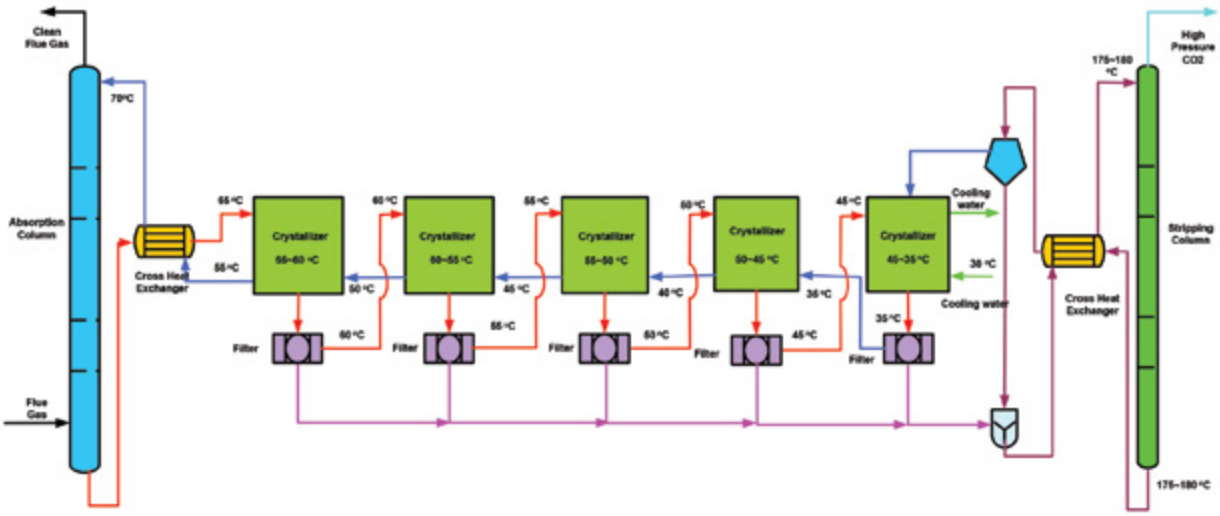

Figure 2: Process Design Concept

technology advantages

- High stripping pressure, which equates to low compression work and low stripping heat (high CO_2/H_2O ratio).
- Low sensible heat as a result of comparable working capacity to MEA and low Cp (1/2).
- Low heat of absorption – 7-17 kcal/mol CO_2 (crystallization heat included) vs. 21 kcal/mol for MEA.
- Increased absorption rate by employing high concentration PC and high absorption temperature.
- FGD may be eliminated.
- No solvent degradation.
- Low-cost solvent.
- Less corrosiveness.

R&D challenges

- Identifying favorable process conditions and promoters/catalysts for achieving fast absorption kinetics in carbonate solution.
- Identifying process conditions and solution properties for achieving a fast crystallization rate and a desirable crystal size for solid separation.
- Identifying process conditions for potassium bicarbonate slurry to achieve stripping pressure ≥ 10 bar.
- Identifying process conditions for >95 percent SO_2 removal and continuous reclamation of the sulfate.
- Identifying risk mitigation strategies to prevent fouling on surfaces of heat exchangers and crystallizers due to bicarbonate crystallization.

results to date/accomplishments

- Three inorganic catalysts and five amine and three amine acid salt promoters were evaluated using a batch stirred tank reactor.
- A bench-scale, packed-bed column was designed and fabricated to investigate the kinetics, mass transfer, and hydrodynamic performance of CO_2 absorption in a packed-bed configuration. Absorption column tests revealed that CO_2 removal efficiency by 40wt% $K_2CO_3/KHCO_3$ solution promoted by either of two selected promoters at 70°C was higher than that of the counterpart 5M MEA solution at 50°C at the CO_2 loading levels typical of the two processes.
- Mixed suspension-mixed product removal (MSMPR) crystallization tests revealed that pure $KHCO_3$ crystals could be obtained and crystallization time ≤ 40 min was sufficient to obtain large crystal particles (>233 µm) required for efficient solid-liquid separation.
- Vapor Liquid Equilibrium (VLE) measurements for concentrated $KHCO_3/K_2CO_3$ aqueous systems with high levels of K_2CO_3 conversion at temperatures of 140 to 200°C revealed the thermodynamic feasibility of high-pressure stripping (achieving both a high total pressure and a low H_2O/CO_2 pressure ratio).
- A bench-scale, packed-bed stripping column with a temperature rating of 200°C and pressure rating of 500 pounds per square inch absolute (psia) was fabricated and installed at the UIUC laboratory. Crystallization tests with sodium bicarbonate and potassium bicarbonate were completed and results revealed that crystallization of $NaHCO_3$ from the mixture is feasible.
- Parametric tests of reclaiming the potassium sulfate desulfurization byproduct were performed and results provided guidance for developing a process concept for the combined SO_2 removal and CO_2 capture.

next steps

- Complete high-pressure stripping column test of $K_2CO_3/KHCO_3$ system.
- Complete a techno-economic analysis for the Hot-CAP integrated with a 550-MWe power plant.

available reports/technical papers/presentations

Lu, Y., "Bench Scale Development of a Hot Carbonate Absorption Process with Crystallization-Enabled High Pressure Stripping for Post-Combustion CO_2 Capture," presented at the 2011 NETL CO_2 Capture Technology Meeting, Pittsburgh, Pennsylvania, August 2011. *http://www.netl.doe.gov/publications/proceedings/11/co2capture/presentations/2-Tuesday/23Aug11-Lu-ISGS-Hot%20Carbonate%20Absorption%20Process.pdf*.

Lu, Y., "Bench Scale Development of a Hot Carbonate Absorption Process with Crystallization-Enabled High Pressure Stripping for Post-Combustion CO_2 Capture," presented at the 2012 NETL CO_2 Capture Technology Meeting, Pittsburgh, Pennsylvania, July 2012. *http://www.netl.doe.gov/publications/proceedings/12/co2capture/presentations/2-Tuesday/Y%20Lu-ISGS-Hot%20CAP.pdf*.

Lu, Y.; O'Brien K.; and Chen, S., "Bench Scale Development of a Hot Carbonate Absorption Process with Crystallization-Enabled High Pressure Stripping for Post-Combustion CO_2 Capture," presented at the Project Review Meeting, Pittsburgh, PA, February 15, 2013. *http://www.netl.doe.gov/File%20Library/Research/Coal/ewr/co2/HotCAP-review-meeting-021513.pdf*.

BENCH-SCALE SILICONE PROCESS FOR LOW-COST CO_2 CAPTURE

primary project goals

GE Global Research is operating a post-combustion carbon dioxide (CO_2) capture process using a novel aminosilicone-based solvent system (60wt/40wt GAP-1/TEG) capable of achieving 90 percent CO_2 capture efficiency with less than a 35 percent increase in cost of electricity (COE).

technical goals

- Design and construct a bench-scale unit and obtain parametric data.
- Create a process model that more accurately predicts the capture efficiency and costs.
- Develop a material manufacturing plan for aminosilicone solvent.
- Develop a scale-up strategy.

technical content

GE will continue the development and testing of a novel aminosilicone-based solvent using a continuous bench-scale system to capture CO_2 from simulated coal-fired flue gas. In a previous U.S. Department of Energy (DOE)-funded project (DE-NT0005310), the novel solvent was developed and tested in a laboratory-scale, continuous CO_2-capturesystem.

The aminosilicone-based solvent has a much lower volatility than monoethanolamine (MEA), which simplifies the desorption process and decreases the energy required to affect CO_2 desorption. The aminosilicone-based CO_2-capture process is predicted to have a 34 percent lower energy penalty than a comparable MEA process. The solvent can be regenerated at elevated pressures (≈5 atm), resulting in lower compression costs. Bench-scale tests will be used to update the COE calculations and perform a techno-economic feasibility study. Milliken/SiVance, LLC will study means for manufacturing the solvent in bench- and commercial-scale quantities, as well as methods for reducing the solvent cost (see Figure 1).

Previously measured experimental data from the laboratory-scale CO_2-capture system have been used to design the continuous bench-scale system. Basic engineering data, such as mass-transfer information, will be obtained at the bench scale to determine process scalability and likely process economics. A manufacturing plan for the aminosilicone solvent and price model will be used for optimization of the solvent system. GE Global Research will operate the bench-scale system and gather the engineering and property data required to assess the technical and economic feasibility of the process. GE Energy is responsible for developing a model of the bench-scale process and calculating the COE, performing the technical and economic feasibility studies, and developing the scale-up strategy.

technology maturity:
Bench-Scale, Simulated Flue Gas

project focus:
Novel Aminosilicone Solvent

participant:
GE Global Research

project number:
FE0007502

NETL project manager:
David Lang
david.lang@netl.doe.gov

principal investigator:
Benjamin Wood
GE Global Research
woodb@research.ge.com

partners:
Milliken/SiVance LLC
GE Energy

performance period:
10/1/11 – 12/31/13

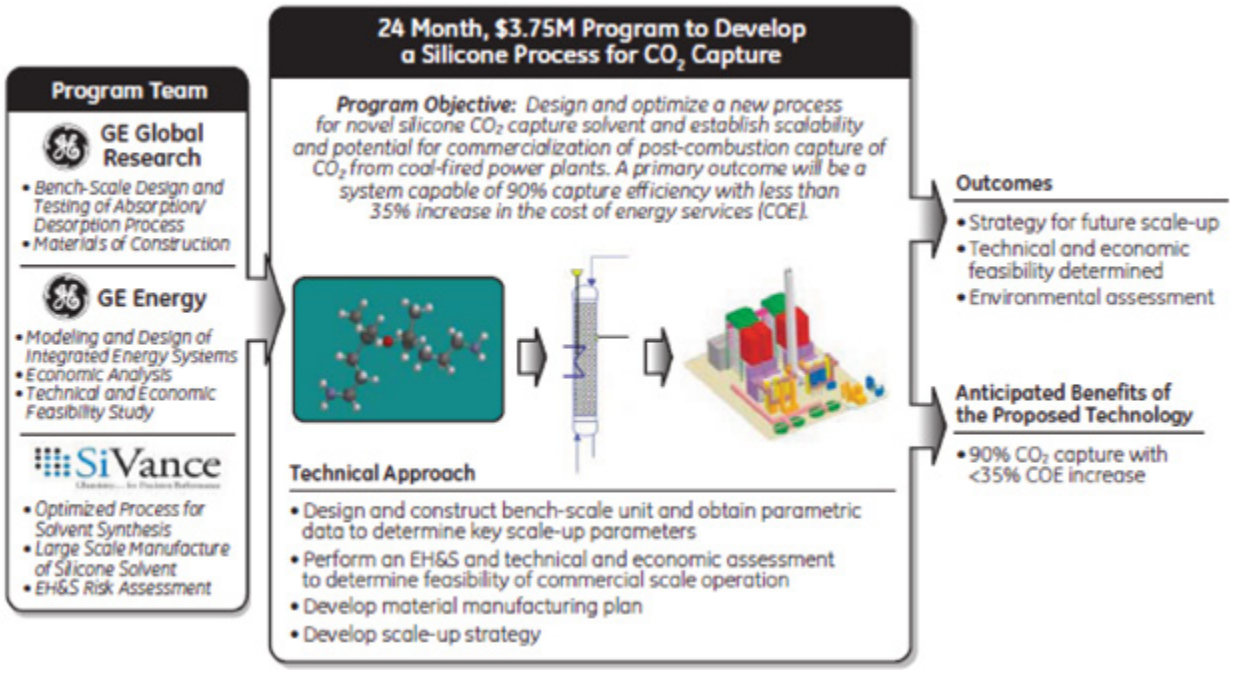

Figure 1: Summary of Program

TABLE 1: PROCESS PARAMETERS

	Units	Current R&D Value	Target R&D Value
Pure Solvent			
Molecular Weight	mol^{-1}	322.67 (amin) 150.17 (TEG)	322.67 (amin) 150.17 (TEG)
Normal Boiling Point	°C	310 (amin) 287 (TEG)	310 (amin) 287 (TEG)
Normal Freezing Point	°C	-85 (amin) -7°C (TEG)	-85 (amin) -7°C (TEG)
Vapor Pressure @ 15°C	bar	52 mm Hg @ 141°C (amin) <0.01 mm Hg @ 20°C (TEG)	52 mm Hg @ 141°C (amin) <0.01 mm Hg @ 20°C (TEG)
Manufacturing Cost for Solvent	$/kg	$160	$30
Working Solution			
Concentration	kg/kg	60/40 amin/TEG	60/40 amin/TEG
Specific Gravity (15°C/15°C)	-	0.913 (amin) 1.124 (TEG)	0.913 (amin) 1.124 (TEG)
Specific Heat Capacity @ STP	kJ/kg-K	43	43
Viscosity @ STP	cP	4.37 (amin) 49 (TEG)	4.37 (amin) 49 (TEG)
Absorption			
Pressure	bar	1	1
Temperature	°C	40-60	40-60
Equilibrium CO_2 Loading	mol/mol	0.51	0.83
Heat of Absorption	kJ/mol CO_2	106	106
Solution Viscosity	cP	500	500

TABLE 1: PROCESS PARAMETERS

	Units	Current R&D Value	Target R&D Value
Desorption			
Pressure	bar	1	6
Temperature	°C	120°C	160°C
Equilibrium CO_2 Loading	mol/mol	0.05	0.25
Heat of Desorption	kJ/mol CO_2	-106	-106
Proposed Module Design		*(for equipment developers)*	
Flue Gas Flowrate	kg/hr		
CO_2 Recovery, Purity, and Pressure	% / % / bar		
Adsorber Pressure Drop	bar		
Estimated Absorber/Stripper Cost of Manufacturing and Installation	$ / kg/hr		

* Working capacity is the loading difference of CO_2-rich solution before and after it is regenerated.

Definitions:

STP – Standard Temperature and Pressure (15°C, 1 atm).

Pure Solvent – Chemical agent(s), working alone or as a component of a working solution, responsible for enhanced CO_2 absorption (e.g., the amine MEA in an aqueous solution).

Manufacturing Cost for Solvent – "Current" is market price of chemical, if applicable; "Target" is estimated manufacturing cost for new solvents, or the estimated cost of bulk manufacturing for existing solvents.

Working Solution – The solute-free (i.e., CO_2-free) liquid solution used as the working solvent in the absorption/desorption process (e.g., the liquid mixture of MEA and water).

Absorption – The conditions of interest for absorption are those that prevail at maximum solvent loading, which typically occurs at the bottom of the absorption column. These may be assumed to be 1 atm total flue-gas pressure (corresponding to a CO_2 partial pressure of 0.13 bar) and 40°C; however, measured data at other conditions are preferable to estimated data.

Desorption – The conditions of interest for desorption are those that prevail at minimum solvent loading, which typically occurs at the bottom of the desorption column. Operating pressure and temperature for the desorber/stripper are process-dependent (e.g., an MEA-based absorption system has a typical CO_2 partial pressure of 1.8 bar and a reboiler temperature of 120°C). Measured data at other conditions are preferable to estimated data.

Pressure – The pressure of CO_2 in equilibrium with the solution. If the vapor phase is pure CO_2, this is the total pressure; if it is a mixture of gases, this is the partial pressure of CO_2. Note that for a typical pulverized coal (PC) power plant, the total pressure of the flue gas is about 1 atm and the concentration of CO_2 is about 13.2 percent. Therefore, the partial pressure of CO_2 is roughly 0.132 atm or 0.130 bar.

Concentration – Mass fraction of pure solvent in working solution.

Loading – The basis for CO_2 loadings is moles of pure solvent.

Estimated Cost – Basis is kg/hr of CO_2 in CO_2-rich product gas; assuming targets are met.

Other Parameter Descriptions:

Chemical/Physical Solvent Mechanism – The reaction of the GAP class of aminosilicones with CO_2 is shown in Figure 2. The aminosilicone in this study is a mixture of GAP molecules where the average value of the subscript (x) shown in Figure 2 is 1. This solvent is designated GAP-1. GAP-1 is combined with triethylene glycol (TEG) in a 60/40 (by weight) mixture to inhibit the solidification that occurs when the neat solvent (GAP-1) reacts with CO_2.

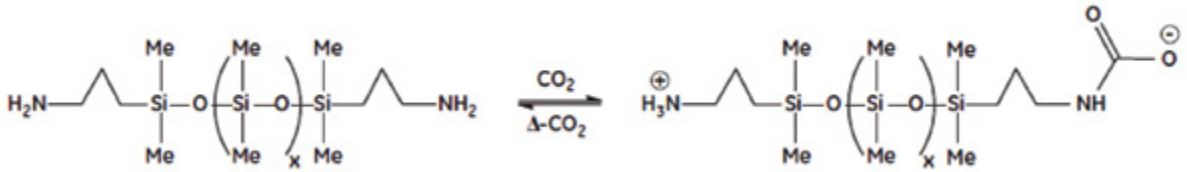

Figure 2: Reaction of GAP Class of Aminosilicones with CO_2 to Form GAP Carbamate

Solvent Contaminant Resistance – As with MEA, aminosilicones will react irreversibly with sulfur dioxide (SO_2) to form heat-stable salts (HSS). Solvent make-up will be required to replace aminosilicone lost to reaction with SO_2.

Solvent Foaming Tendency – None observed.

Flue Gas Pretreatment Requirements – In a full-scale system, the flue gas pretreatment requirements are identical to those of an MEA-based process, including a selective catalytic reduction reactor, particulate removal, and flue gas desulfurizer (FGD).

Solvent Make-Up Requirements – In addition to the solvent make-up required due to reaction of aminosilicone with SO_2, additional solvent make-up will be required due to thermal decomposition. However, it has been demonstrated that GAP-1 is significantly more thermally stable than MEA, as discussed below.

Waste Streams Generated – A waste stream of HSS from the reaction of SO_2 with aminosilicone will be generated.

Process Design Concept – The process flow diagram for the aminosilicone-based, bench-scale CO_2-capture system is shown in Figure 3.

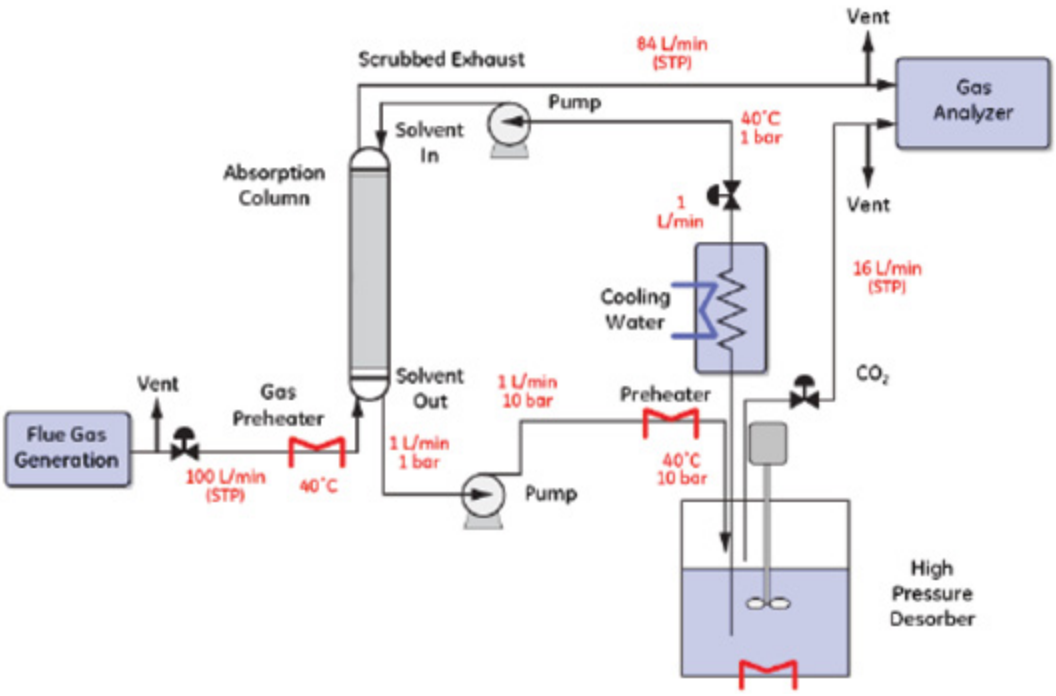

Figure 3: The Process Flow Diagram for the Bench-Scale System

Proposed Module Design – Unless noted, flue gas feed pressure is 1.014 bara, temperature is 57°C, and composition leaving the flue gas desulfurization (FGD) unit (wet basis) should be assumed:

Composition (% vol)					Composition (ppmv)	
CO_2	H_2O	N_2	O_2	Ar	SO_x	NO_x
13.17	17.25	66.44	2.34	0.8	42	74

technology advantages

- High Thermal Stability – The aminosilicone-based solvent demonstrates high thermal stability, allowing the desorption to occur at temperatures as high as 180°C. The higher desorption temperature results in increased desorption pressures with a high CO_2 working capacity.
- Low Volatility – The low volatility of the aminosilicone-based solvent simplifies the CO_2 desorption process, resulting in lower capital costs and less energy wasted on unwanted vaporization of the solvent.
- A 34 percent lower energy penalty than a comparable MEA process.

R&D challenges

- It may be necessary to reduce the water content of the flue gas prior to absorption to avoid water build-up in the solvent recirculation loop, which may impose additional costs.
- The effects of water on solvent CO_2 capacity, solvent degradation, and corrosion are unknown.
- Cost-effective scale-up of the process for producing aminosilicone solvent compared to current methods.
- Designing scaled-up unit mass- and heat-transfer operations that can significantly lower the COE with the higher viscosity and slower mass-transfer rates of the CO_2-loaded solvent.

results to date/accomplishments

- Thermal stability tests (150 to 180°C for ≈90 days) results showed that the GAP-1/TEG solvent was stable at 150°C.
- Successfully completed the design and assembly of a continuous bench-scale absorption (flue gas flow rate up to 200 standard liters/min [SLPM], 40°C)/desorption unit.
- Preliminary manufacturability analysis identified several improvements that could reduce the GAP-1 cost from the current cost of $150 to $160/kg to $45 to $85/kg.

next steps

- Complete bench-scale testing to determine scale-up effects and performance of aminosilicone-based solvent system.
- Develop model of bench-scale system performance and update COE calculations.

available reports/technical papers/presentations

Wood, B., "Bench-Scale Silicone Process for Low-Cost CO_2 Capture," presented at the 2012 NETL CO_2 Capture Technology Meeting, July 2012. *http://www.netl.doe.gov/publications/proceedings/12/co2capture/presentations/2-Tuesday/B%20Wood-GE-Silicone%20Process.pdf*.

GE Global Research, 2011, Bench-Scale Silicone Process for Low-Cost CO_2 Capture, Project kickoff meeting presentation, November 22, 2011. *http://www.netl.doe.gov/File%20Library/Research/Coal/ewr/co2/bench-scale-silicone-process-low-cost-kickoff-nov2011.pdf*.

Perry, R.J., et.al, "Aminosilicones for CO_2 Capture," ChemSusChem, 2010, August 23,3(8): 919-930.

NOVEL SOLVENT SYSTEM FOR POST-COMBUSTION CO_2 CAPTURE

primary project goals

The overall project goals are to demonstrate ION Engineering's advanced solvent using a coal-fired, post-combustion pilot to obtain sufficient data to advance to the 0.5- to 1.0-megawatt (MW) slipstream level of testing and to demonstrate significant progress towards the achievement of U.S. Department of Energy (DOE) cost and performance targets for 2nd generation solvents.

technical goals

- Process design objectives are to evaluate key parameters for the design of a 1.0-gallon per minute (gpm) carbon dioxide (CO_2) capture unit through laboratory work, process modeling, and performance tests.
- Process operation and evaluation objectives are to fabricate, install, and operate a bench-scale unit using simulated flue gas (CO_2, nitrogen [N_2], and water [H_2O]) at ION's laboratories.
- Test ION's advanced solvent at the 0.2-MW scale using coal-fired flue gas at the Energy and Environmental Research Center's (EERC) combustion test facility (CTF).

technical content

ION Engineering, in collaboration with its partners, will design, construct, operate, and evaluate a bench-scale CO_2 capture system using simulated flue gas at ION's laboratories. The project will demonstrate ION's solvent approach for amine-based CO_2 capture, using mixtures of amines and organic solvents. ION's solvent system is related to well-understood aqueous amine solvent-based processes in that it utilizes proven amines as chemical solvents for CO_2 capture; however, it differs significantly with the use of an organic solvent in place of water. By using an organic solvent in place of water, significant reductions in regeneration energy requirements and significantly higher CO_2 loading capacities are anticipated.

The project will demonstrate ION's solvent system's ability to capture CO_2 using a 1.0-gpm bench-scale process unit, and will include simulation modeling to finalize process designs, laboratory evaluations, solvent selection, and scale-up from the existing laboratory units to the bench-scale process unit. The evaluation of ION's solvent system using actual coal-fired flue gas will provide data for the design and operations for slipstream testing, as well as for the performance at commercial scale.

The project is divided into two phases. Phase I was focused on solvent thermophysical characterization, process simulation for coal-fired flue gas, and construction of the laboratory pilot. Phase II has focused on testing ION's advanced solvent in the laboratory pilot using several process configurations. Phase II has also included approximately 500 hours of testing using coal and natural gas combined cycle (NGCC) flue gas conditions at EERC's CTF. Phase II further includes a techno-economic analyses conducted by EERC in order to obtain an estimate for the cost of electricity (COE) impact of ION's advanced solvent for a new 550-MW coal-fired power generation facility.

technology maturity:

Pilot-scale, Actual Flue Gas Slipstream (0.2 MW)

project focus:

Advanced Solvent

participant:

ION Engineering

project number:

FE0005799

NETL project manager:

Isaac Aurelio
isaac.aurelio@netl.doe.gov

principal investigator:

Alfred (Buz) Brown, PhD
ION Engineering, LLC
brown@ion-engineering.com

partners:

Electric Power Research Institute
EERC
Eltron Research
University of Alabama
WorleyParsons Group, Inc.

performance period:

10/1/10 – 9/30/13

Coal-fired flue gas performance summary for ION's advanced solvent

- 72hr Steady-state performance @ EERC's CTF
  - 65% Reduction in regeneration energy
  - 35% Reduction in L/G Ratio
- Economic analysis by EERC
  - 37% increase in COE for new build 550MW plant vs. 69% increase for MEA Case 10
  - \$27/ton CO_2 capture cost (not avoided) vs. \$45/ton for MEA Case 10 (not avoided)
  - 31.0% net plant efficiency vs. 26.2% net plant efficiency for MEA Case 10

Figure 1: Coal-Fired Flue Gas Performance Summary for ION's Advanced Solvent

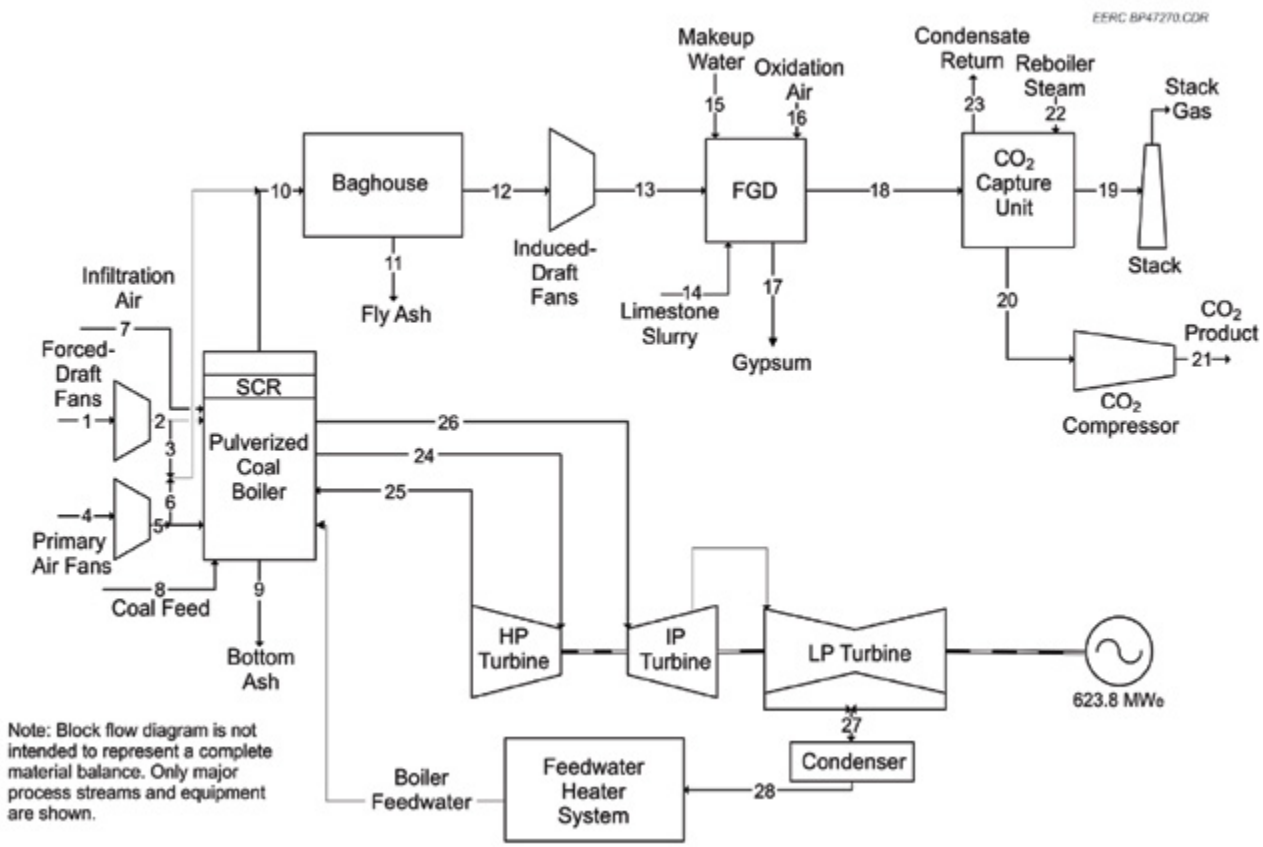

Figure 2: Block Flow Diagram for Case 10 ION Advanced Solvent, PC Combustion Plant with CO_2 Capture

TABLE 1: PROCESS PARAMETERS SOLVENT

	Units	Current R&D Value	Target R&D Value
Pure Solvent			
Molecular Weight	mol^{-1}	75 – 95	same
Normal Boiling Point	°C	150 – 210	same
Normal Freezing Point	°C	-5.0	same
Vapor Pressure @ 15°C	bar	1-2x10-4	same
Manufacturing Cost for Solvent	$/kg	N/A	same
Working Solution			
Concentration	kg/kg	0.7 – 0.85	same
Specific Gravity (15°C/15°C)	-	≈1.0	same
Specific Heat Capacity @ STP	kJ/kg-K	≈2.0	same
Viscosity @ STP	cP	<5	same
Absorption			
Pressure	bar	0.10 – 0.15	same
Temperature	°C	40 – 60	same
Equilibrium CO_2 Loading	mol/mol	1.1 – 1.7	1.75 – 2.5
Heat of Absorption	kJ/mol CO_2	1750 – 2000	same
Solution Viscosity	cP	< 20	same
Desorption			
Pressure	bar	1.1	same
Temperature	°C	110 - 220	same
Equilibrium CO_2 Loading	mol/mol	0.017 – 0.417	0.01 – 0.2
Heat of Desorption	kJ/mol CO_2	1,750 – 2,000	same

Definitions:

STP – Standard Temperature and Pressure (15°C, 1 atm).

Pure Solvent – Chemical agent(s), working alone or as a component of a working solution, responsible for enhanced CO_2 absorption (e.g., the amine MEA in an aqueous solution).

Manufacturing Cost for Solvent – "Current" is market price of chemical, if applicable; "Target" is estimated manufacturing cost for new solvents, or the estimated cost of bulk manufacturing for existing solvents.

Working Solution – The solute-free (i.e., CO_2-free) liquid solution used as the working solvent in the absorption/desorption process (e.g., the liquid mixture of MEA and water).

Absorption – The conditions of interest for absorption are those that prevail at maximum solvent loading, which typically occurs at the bottom of the absorption column. These may be assumed to be 1 atm total flue-gas pressure (corresponding to a CO_2 partial pressure of 0.13 bar) and 40°C; however, measured data at other conditions are preferable to estimated data.

Desorption – The conditions of interest for desorption are those that prevail at minimum solvent loading, which typically occurs at the bottom of the desorption column. Operating pressure and temperature for the desorber/stripper are process-dependent (e.g., an MEA-based absorption system has a typical CO_2 partial pressure of 1.8 bar and a reboiler temperature of 120°C). Measured data at other conditions are preferable to estimated data.

Pressure – The pressure of CO_2 in equilibrium with the solution. If the vapor phase is pure CO_2, this is the total pressure; if it is a mixture of gases, this is the partial pressure of CO_2. Note that for a typical pulverized coal (PC) power plant, the total pressure of the flue gas is about 1 atm and the concentration of CO_2 is about 13.2 percent. Therefore, the partial pressure of CO_2 is roughly

0.132 atm or 0.130 bar.

Concentration – Mass fraction of pure solvent in working solution.

Loading – The basis for CO_2 loadings is moles of pure solvent.

Estimated Cost – Basis is kg/hr of CO_2 in CO_2-rich product gas; assuming targets are met.

technology advantages

Relative to state-of-the-art aqueous amine technology, ION's advanced solvent offers:

- Greater than 50 percent reduction in regeneration energy requirements, leading to lower operating and capital costs.
- Higher CO_2 loading capacities, leading to lower operating and capital costs.
- Reduced corrosion and solvent losses.
- Less make-up water used by the process.
- Ability to use lower-quality steam in regeneration.

R&D challenges

- The current performance levels need to be demonstrated at the 0.5- to 1.0-MW slipstream level for longer test runs.
- Solvent stability, degradation, and corrosion potential needs to be investigated under coal-fired slipstream test conditions.

results to date/accomplishments

- Developed significant analytical and physical characterization capabilities to support further solvent development.
- Designed, constructed, and validated in-house lab pilot (9-gal/hr solvent flow and 180-standard liters per minute [SLPM] gas flow) for testing and characterization of ION advanced solvents.
- ION's lead advanced solvent tested for more than 500 hours at EERC's CTF under both coal and NGCC conditions.
- 72-h steady state test results indicate >50 percent reduction in regeneration energy and >35 percent decrease in L/G (improvement in CO_2 carrying capacity) compared to aqueous monoethanolamine (MEA) (30 wt %).
- Techno-economic evaluation by EERC indicates:
  - 37 percent increase in COE for new build @ 550 MW vs. 69 percent increase for MEA Case 10.
  - $27/ton CO_2 capture cost (not avoided) vs. $45/ton for MEA Case 10 (not avoided).
  - 31.0 percent net plant efficiency vs. 26.2 percent net plant efficiency for MEA Case 10.
  - Reduced corrosion potential re aqueous MEA.
  - Significantly less make-up water re aqueous MEA.

next steps

- Complete evaluation of solvent degradation, loss, and corrosive potential at increasing concentrations of flue gas contaminants.
- Complete technical and economic analyses.
- Complete final report for DOE.

available reports/technical papers/presentations

Pavlish, B.M.; Kay, J.P.; Strege, J.R.; Fiala, N.J.; Stanislowski, J.J.; Snyder, A.C. Subtask 2.5 – Partnership for CO_2 Capture – Phases I and II; Final Report (Sept 1, 2010 – April 30, 2013) for U.S. Department of Energy National Energy Technology Laboratory Cooperative Agreement No. DE-FC26-08NT43291; EERC Publication 2013-EERC-04-12; Energy & Environmental Research Center: Grand Forks, ND, April 2013.

EVALUATION OF CONCENTRATED PIPERAZINE FOR CO_2 CAPTURE FROM COAL-FIRED FLUE GAS

technology maturity:

Pilot-Scale, Simulated Flue Gas and Actual Flue Gas Slipstream

project focus:

Piperazine Solvent with Flash Regeneration

participant:

URS Group

project number:

FE0005654

NETL project manager:

Bruce Lani
bruce.lani@netl.doe.gov

principal investigator:

Katherine Dombrowski
URS Group, Inc.
katherine.dombrowski@urscorp.com

partners:

Trimeric Corporation
University of Texas (UT) at Austin

performance period:

10/1/10 – 9/30/13

primary project goals

URS Group, Inc. (URS) is investigating the use of a high-temperature flash regenerator using concentrated piperazine (PZ) solvent to capture carbon dioxide (CO_2) from coal flue gas more economically. Pilot tests and analyses will be conducted at the 0.1-megawatt (MW) scale, and then scaled to the 0.5-MW scale for testing at the U.S. Department of Energy's (DOE) National Carbon Capture Center (NCCC). Results will be used to evaluate the technical and economic feasibility of a full-scale implementation of this process.

technical goals

Project objectives are to:

- Quantify and demonstrate the robustness of concentrated PZ with coal-fired flue gas in an integrated absorption/stripping system with solvent regeneration at 150°C.
- Optimize equipment design and energy performance of the innovative flash system.
- Identify and resolve other potential operational and design issues, including amine aerosol emissions, process control, corrosion, foaming, and solids precipitation.

technical content

URS, in collaboration with the University of Texas (UT) and Trimeric Corporation, will investigate the use of concentrated PZ as a solvent for absorbing CO_2 from coal-fired power plant flue gas. Measured properties of PZ are shown in Table 1. Evaluations of concentrated PZ for CO_2 removal have previously been performed through laboratory investigations, process modeling, and synthetic flue gas testing in a 0.1-MW unit. Results indicated greater than 90 percent CO_2 capture with significant reduction in the cost of electricity (COE). This project continues the development of the PZ-based CO_2 absorption process through a series of field tests to gain operational experience with the solvent in coal-fired flue gas, while employing a novel, high-temperature, two-stage flash (2SF) regeneration design.

The project team is conducting this project in two phases. In the first phase, the PZ absorption process was combined with a novel regeneration scheme – a high-temperature 2SF, shown in Figure 1. A three-week test was conducted in synthetic flue gas at the 0.1-MW scale using PZ in the absorption column at UT's Separations Research Program (SRP) plant, coupled with the project team's 0.1-MW 2SF system. The results from the SRP test program and the techno-economic analysis demonstrated the benefits of using PZ as a solvent-of-choice for CO_2 capture. The results from the SRP test program demonstrated that 2SF regeneration is a viable alternative regeneration process to simple stripping; however, the techno-economic analysis showed only a marginal economic benefit of the 2SF process.

Based on the project findings thus far, the project team recommended to DOE's National Energy Technology Laboratory (NETL) that the 2SF regeneration process not be scaled-up for a test campaign at NCCC. Since one of the main objectives of this project is to address operational and design issues of the PZ process, the project team recommended to DOE/

NETL that project resources be allocated towards investigating and solving critical solvent management issues that are common to amine solvents, including PZ. DOE/NETL approved the project team to use the project resources remaining in Phase I to study aerosol formation in the absorber. Aerosols have been implicated in high amine emissions from absorbers at several pilot plants. The project team will conduct tests at UT's SRP plant to investigate possible mechanisms for aerosol formation; these tests are planned for 2013. After completion of the aerosol tests at the SRP plant, the project team will submit a continuation application to DOE/NETL to proceed to Phase II, in which PZ will be tested at the 0.5-MW scale on coal-fired flue gas at NCCC.

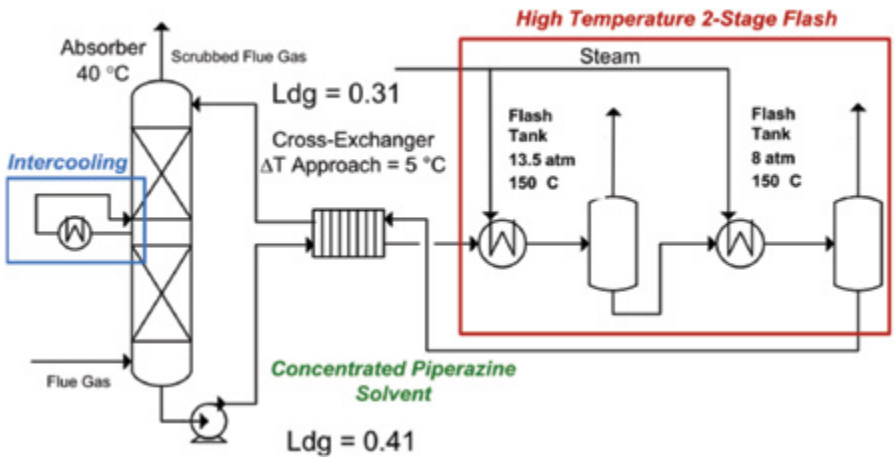

Figure 1: Diagram of PZ CO_2 Absorption Process with High-Temperature Two-Stage Flash

TABLE 1: PROCESS PARAMETERS FOR 8 MOLAL PIPERAZINE SOLVENT

	Units	Current R&D Value
Pure Solvent		
Molecular Weight	mol^{-1}	86.14
Normal Boiling Point	°C	146
Normal Freezing Point	°C	106
Vapor Pressure @ 15°C	bar	0.000206
Manufacturing Cost for Solvent	$/kg	$60/lb eq N
Working Solution		
Concentration	kg/kg	40.79%
Specific Gravity (15°C/15°C)	-	1.029
Specific Heat Capacity @ STP	kJ/kg-K	3.197
Viscosity @ STP	cP	17.7
Absorption		
Pressure	bar	0.05
Temperature	°C	40
Equilibrium CO_2 Loading	mol/mol	0.8
Heat of Absorption	kJ/mol CO_2	70
Solution Viscosity	cP	11.5
Desorption		
Pressure	bar	6
Temperature	°C	150
Equilibrium CO_2 Loading	mol/mol	0.3
Heat of Desorption	kJ/mol CO_2	70

Definitions:

STP – Standard Temperature and Pressure (15°C, 1 atm).

Pure Solvent – Chemical agent(s), working alone or as a component of a working solution, responsible for enhanced CO_2 absorption (e.g., the amine monoethanolamine [MEA] in an aqueous solution).

Manufacturing Cost for Solvent – "Current" is market price of chemical, if applicable; "Target" is estimated manufacturing cost for new solvents, or the estimated cost of bulk manufacturing for existing solvents.

Working Solution – The solute-free (i.e., CO_2-free) liquid solution used as the working solvent in the absorption/desorption process (e.g., the liquid mixture of MEA and water).

Absorption – The conditions of interest for absorption are those that prevail at maximum solvent loading, which typically occurs at the bottom of the absorption column. These may be assumed to be 1 atm total flue-gas pressure (corresponding to a CO_2 partial pressure of 0.13 bar) and 40°C; however, measured data at other conditions are preferable to estimated data.

Desorption – The conditions of interest for desorption are those that prevail at minimum solvent loading, which typically occurs at the bottom of the desorption column. Operating pressure and temperature for the desorber/stripper are process-dependent (e.g., an MEA-based absorption system has a typical CO_2 partial pressure of 1.8 bar and a reboiler temperature of 120°C). Measured data at other conditions are preferable to estimated data.

Pressure – The pressure of CO_2 in equilibrium with the solution. If the vapor phase is pure CO_2, this is the total pressure; if it is a mixture of gases, this is the partial pressure of CO_2. Note that for a typical pulverized coal (PC) power plant, the total pressure of the flue gas is about 1 atm and the concentration of CO_2 is about 13.2 percent. Therefore, the partial pressure of CO_2 is roughly 0.132 atm or 0.130 bar.

Concentration – Mass fraction of pure solvent in working solution.

Loading – The basis for CO_2 loadings is moles of pure solvent.

Estimated Cost – Basis is kg/hr of CO_2 in CO_2-rich product gas; assuming targets are met.

Other Parameter Descriptions:

Chemical Solvent Mechanism – The reaction of PZ with CO_2 involves formation of the following four PZ species:

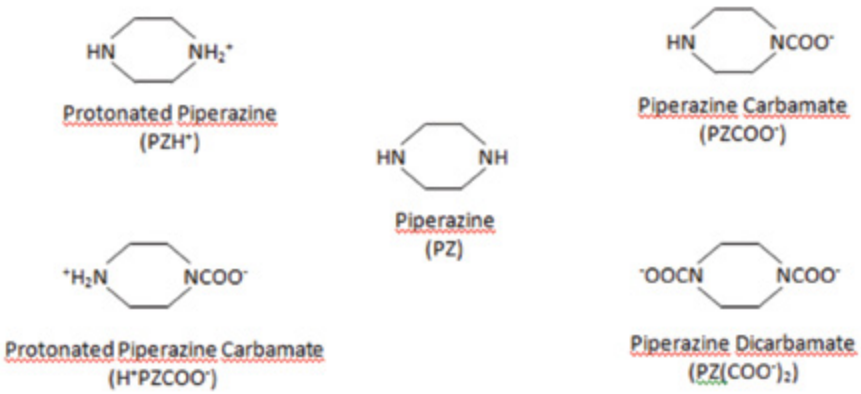

Figure 2: Molecular Structure of Piperazine Species[1]

These reactions are as follows:

1. $PZH^+ + H_2O \leftrightarrow PZ + H_3O^+$
2. $PZ + CO_2 + H_2O \leftrightarrow PZCOO^- + H_3O^+$
3. $H_2O + H^+PZCOO^- \leftrightarrow H_3O^+ + PZCOO^-$
4. $PZCOO^- + CO_2 + H_2O \leftrightarrow PZ(COO^-)_2 + H_3O^+$

TABLE 2: EQUILIBRIUM CONSTANTS FOR ABOVE REACTIONS[1]

Eq. No.	Equilibrium Constant	$\ln K = A + B/T + C \ln T$		
		A	B	C
1	$K_1 = \frac{x_{PZ} x_{H3O+}}{x_{H2O} x_{PZH+}}$	-11.91	-4,351	–
2	$K_2 = \frac{x_{H3O+} x_{PZCOO-}}{x_{PZ} x_{CO2} x_{H2O}}$	-29.31	5,615	–
3	$K_3 = \frac{x_{H3O+} x_{PZCOO-}}{x_{H+PZCOO-} x_{H2O}}$	-8.21	-5,286	–
4	$K_4 = \frac{x_{H3O+} x_{PZ(COO-)2}}{x_{PZCOO-} x_{CO2} x_{H2O}}$	-30.78	5,615	–

This speciation and solubility model has been used to predict the partial pressure of CO_2 and mole fraction of species in solution as a function of PZ loading; the results show a good match between the model and the experimental data.

Solvent Contaminant Resistance – 8-m PZ is thermally stable at 150°C with negligible oxidative (Freeman, 2011) degradation. The total amine loss is estimated to be 0.5 percent per week when stripping at 150°C. At 135°C, the estimated total amine loss of PZ is 0.3 percent as compared to 3.0 percent in the case of an MEA solvent. PZ forms nitrosamines and other nitro products with nitrogen dioxide (NO_2). Both pilot-scale flue gas testing and bench-scale testing have confirmed that nitrosamines decompose at temperatures of 150°C and greater. The main degradation products of PZ are formate (0.04 mM/hr) and ammonia (0.09 mM/hr) (Freeman, 2011).

Solvent Foaming Tendency – Pilot plant tests of PZ with two different sources of coal-fired flue gas and with air/CO_2 have experienced no problems with foaming. However, bench-scale experiments have shown the possibility for PZ to foam under certain conditions (e.g., after undergoing oxidation degradation). In the bench-scale tests, foaming of PZ was greatly reduced with use of an oxidation inhibitor or with use of 1 part per million (ppm) of silicone antifoam (Chen, 2011).

Flue Gas Pretreatment Requirement – Tests at UT's SRP plant were performed on synthetic flue gas composed of air and CO_2. NCCC tests will be conducted on medium-sulfur bituminous coal flue gas cleaned by flue gas desulfurization (FGD). Commercial applications would likely need sulfur oxides (SO_x) to be removed to levels below 10 ppm.

Solvent Make-Up Requirements – Including an estimate for additional amine lost in the reclaiming process, the required make-up rate is estimated to be 0.76 kg of 40 wt% PZ per metric ton of CO_2 captured for PZ regenerated at 150°C. The estimated make-up rate for 30 wt% MEA at 120°C is approximately 2.0 kg/MT CO_2.

Waste Streams Generated – The major amine solid/liquid waste streams come from reclaimer waste. There could be fugitive liquid amine emissions, which can be controlled by incorporating seamless valves, rupture disks, closed-loop ventilation systems, pumps with dual mechanical seals, minimum welds, and correct gasket material selection. Gas-phase amine emissions from the absorber can be minimized by controlling aerosol formation and aerosol emissions from the absorber. Gas-phase amine emissions from the stripper can be minimized by controlling temperature of the CO_2 outlet gas and via operating conditions of the condenser.

Process Design Concept – Flowsheet/block flow diagram shown above.

Proposed Module Design – Unless noted, flue gas feed pressure is 1.014 bara, temperature is 57°C, and composition leaving the flue gas desulfurization (FGD) unit (wet basis) should be assumed:

Composition (% vol)					Composition (ppmv)	
CO_2	H_2O	N_2	O_2	Ar	SO_x	NO_x
13.17	17.25	66.44	2.34	0.8	42	74

technology advantages

As compared to conventional amine solvents, the advantages of PZ are:

- Faster CO_2 absorption rate, higher working capacity, higher thermal stability, and less oxidative degradation – all of which point toward 10 to 20 percent less energy use.
- Lower capital costs due to reduced energy use, greater stripper pressure (reduced compressor size), and faster kinetics.
- Additional savings in COE may be achieved by optimization of absorber packing, flue gas pre-treating, compressors, heat exchangers, and design improvements realized as part of this project

R&D challenges

- Similar to other amines, PZ may absorb on aerosols in flue gas leading to poor amine collection in the water wash after CO_2 absorption and thus high amine emissions.
- PZ reacts with dissolved or entrained oxygen (O_2) at temperatures exceeding 150°C, potentially leading to greater than expected solvent makeup, but still less than MEA. Techniques to reduce oxidative degradation, including sparging with N_2, or flashing at T < 100°C are being investigated.
- Robustness of concentrated PZ in flue gas and thermal reclaiming of degraded solvent needs to be demonstrated, because PZ is more expensive to replace than MEA.
- PZ forms as a solid phase with water ($PZ \cdot 6H_2O$) and also with CO_2 ($H^+PZCOO^- \cdot H_2O$). Process robustness to excursions in CO_2 loading, temperature, and water balance is being demonstrated by quantifying their effects on solids precipitation and plant operation.

results to date/accomplishments

- UT-SRP tests demonstrated integration of a high-temperature 2SF (13.5 atm, 8 atm) stripping process with low-thermal degradation, and quantified mass transfer and energy performance with 8-m PZ.
- Operating conditions for 90 percent CO_2 removal (0.31 lean loading, 0.41 rich loading) with high-temperature PZ regeneration were identified.
- The CO_2 removal rate was improved by 6 to 7 percent with spray intercooling in the absorber during the 0.1-MW test campaign at UT SRP.
- Minimal solids precipitation was observed in steady-state operation.
- Process analyses indicated that the high-temperature 2SF process increased the COE by 62.6 percent compared to 81.7 percent increase for MEA. The energy consumption was lowered to 230 kWh/T CO_2.
- Process analysis showed that purchased equipment costs for capture and compression were reduced for the PZ high-temperature 2SF process versus PZ with a simple stripper, but the simple stripper process had slightly better energy performance; these two effects essentially canceled each other out in terms of impact on COE.

next steps

- Further tests (during NCCC 0.5-MW testing) are needed to demonstrate reliable operation on coal-fired flue gas and during longer-term operation in which excursions of CO_2 loading, temperature, and water balance are encountered.
- Solvent degradation in coal-fired flue gas and methods to reduce oxidative solvent degradation will be evaluated during NCCC tests.
- PZ aerosol mitigation technologies (DOE scope) will be tested alongside the next generation advanced flash stripper configuration (non-DOE scope) at the SRP pilot plant in 2013. The purpose of the DOE-funded tests is to demonstrate mechanisms for aerosol growth and aerosol capture strategies. The purpose of the non-DOE scope is to demonstrate improved energy performance of the advanced flash stripper configuration at SRP, so as to provide an advanced regeneration technology for use in DOE-funded Phase II PZ tests at NCCC. Process models results indicate that the equivalent work for the advanced flash stripper configuration is 30.3 kJ/mol CO_2 as compared to 31.5 kJ/mol CO_2 for the 2SF (Madan, 2013).

available reports/technical papers/presentations

Rochelle, G., "Pilot Plant Testing of Piperazine with High T Regeneration," presented at the 2012 NETL CO_2 Capture Technology Meeting, Pittsburgh, PA, July 2012. Available at: *http://www.netl.doe.gov/publications/proceedings/12/co2capture/presentations/2-Tuesday/G%20Rochelle-UT%20Austin-Piperazine.pdf*.

Freeman, S.A., 2011, Thermal degradation and oxidation of aqueous piperazine for carbon dioxide capture, Ph.D. Thesis, University of Texas at Austin. Available at: *http://repositories.lib.utexas.edu/handle/2152/ETD-UT-2011-05-3290*.

Sexton, A., "Evaluation of Concentrated Piperazine for CO_2 Capture from Coal-Fired Flue Gas," presented at the 2011 NETL CO_2 Capture Technology Meeting, Pittsburgh, PA, August 2011. Available at: *http://www.netl.doe.gov/publications/proceedings/11/co2capture/presentations/2-Tuesday/23Aug11-Sexton-Trimeric-Concentrated%20Piperazine%20for%20CO$_2$%20Capt.pdf*.

Dombrowski, K., "Evaluation of Concentrated Piperazine for CO_2 Capture from Coal-Fired Flue Gas," presented at the 2010 NETL CO_2 Capture Technology Meeting, Pittsburgh, PA, September 2010. Available at: *http://www.netl.doe.gov/publications/proceedings/10/co2capture/presentations/wednesday/Katherine%20Dombrowski%20-%20URS%20Corporation.pdf*.

Fine, N. A.; Goldman, M. J.; Nielsen, P. T.; Rochelle, G. T. Managing N-nitrosopiperazine and Dinitrosopiperazine, presented at GHGT-11 Kyoto, Japan. November 18-22, 2012. Energy Procedia, 2013.

Fulk, S. M.; Rochelle, G. T. Modeling Aerosols in Amine-Based CO_2 Capture. GHGT-11; Energy Proc. 2013.

Madan, T.; Stripper Configurations and Modeling for CO_2 Capture Using Piperazine. M. S. Thesis. The University of Texas at Austin, May 2013.

Nielsen, P. T.; Li, L.; Rochelle, G. T. Piperazine Degradation in Pilot Plants. GHGT-11; Energy Proc. 2013.

ADVANCED LOW-ENERGY, ENZYME-CATALYZED SOLVENT FOR CO_2 CAPTURE

primary project goals

Akermin is developing a bench-scale system to capture up to 90 percent of carbon dioxide (CO_2) from a flue gas stream using a solvent with lower parasitic energy using an immobilized enzyme, carbonic anhydrase (CA) that catalyzes the hydration reaction of CO_2 into bicarbonate in solution. Project objectives include the demonstration of a CA delivery system to improve absorption kinetics and to decrease system costs, and advancing the development by bench-scale tests with coal-derived flue gas at the National Carbon Capture Center (NCCC).

technical goals

- Evaluate potential enzyme sources for stability under anticipated operating conditions and down-select to preferred option.
- Optimize design of proprietary polymer films to achieve efficient enzyme immobilization and stabilization.
- Develop detailed Aspen model of enzyme-catalyzed carbonate system and extrapolate to a power plant scale of 550 MWe net; outputs include mass and energy balance, electric power requirements, and projected chemical and maintenance costs.
- Build and test a closed-loop, bench-scale pilot plant capable of processing up to 500 standard liters per minute (SLPM) of flue gas, the approximate equivalent of a 5- to 7-kWe power plant, and demonstrate continuous operation for up to six months.

technical content

An enzyme-catalyzed, low-energy solvent system is being developed for post-combustion CO_2 capture in this project. The core technology involves the integration of a proprietary immobilized-CA enzyme into a packed column absorber to promote the hydration of CO_2 in lower-reaction energy solvents. Chemical solvents of interest include potassium carbonate (K_2CO_3) salt solution. The principal project objective is to demonstrate 90 percent CO_2 capture from coal-derived flue gas in a bench-scale unit with absorption rates competitive with amine-based solvents using a salt solution that has significantly lower regeneration energy and is non-volatile, stable towards oxidation, and environmentally safer. Other key project objectives include evaluating the potential impact of minor contaminants (such as sulfur oxides [SO_x] and nitrogen oxides [NO_x] common to coal-derived flue gases) using lab- and bench-scale tests and to demonstrate immobilized-enzyme activity in excess of 200 days in a continuous, closed-loop reactor (CLR) unit.

The current work plan is focused on establishing kinetic and lab-scale CLR data to support design and scale-up from lab-scale ≈4 SLPM to the bench-unit scale ≈500 SLPM flue gas. Akermin is working to identify a preferred strain of CA that will have a long lifetime under industrial conditions to optimize a delivery system and scale-up to a bench-scale integrated system.

technology maturity:

Bench-Scale, Actual Flue Gas Slipstream

project focus:

Carbonic Anhydrase-Potassium Carbonate Mixture

participant:

Akermin

project number:

FE0004228

NETL project manager:

Andrew Jones
andrew.jones@netl.doe.gov

principal investigator:

John Reardon
Akermin, Inc.
reardonj@akermin.com

partners:

Battelle Memorial Institute (Battelle)
Pacific Northwest National Laboratory (PNNL)

performance period:

10/1/10 – 6/30/13

Pacific Northwest National Laboratory (PNNL) and Battelle Memorial Institute (Battelle) are collaborating to perform necessary wetted-wall kinetic and mass-transfer studies, process modeling, and relevant cost estimation to determine how such a system would scale and cost-effectively integrate into an existing coal-fired power plant compared to the U.S. Department of Energy's (DOE) goal of less than a 35 percent increase in cost of electricity (COE) with post-combustion CO_2 capture.

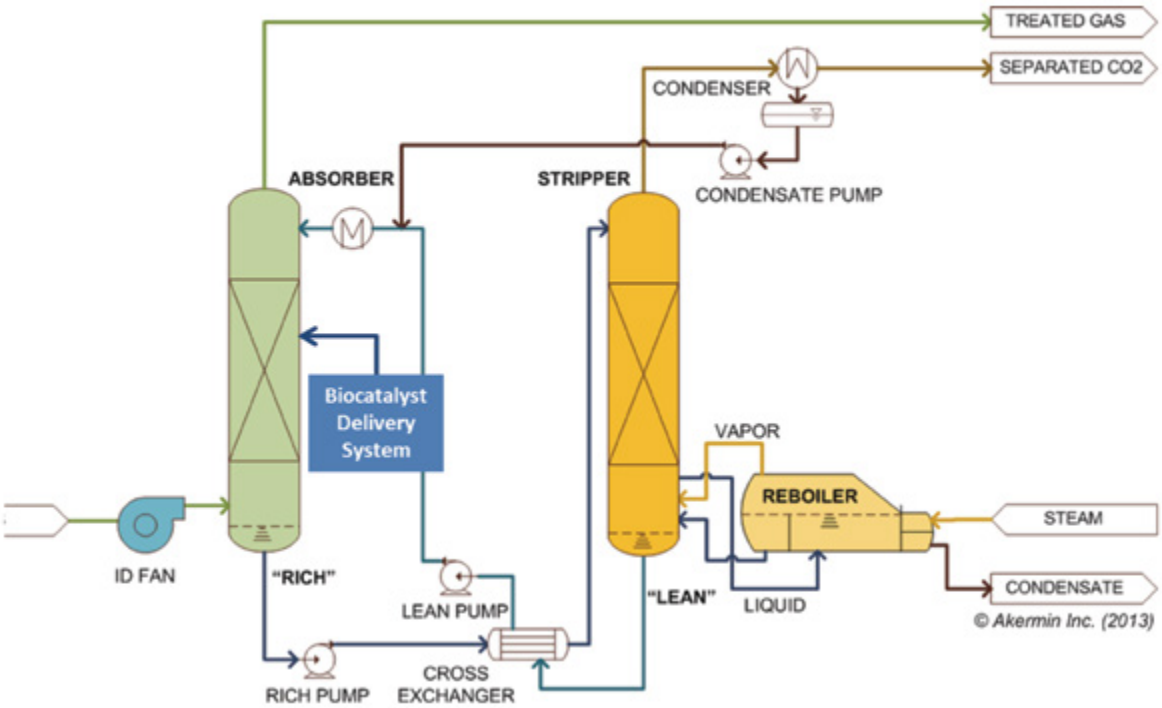

Figure 1: Akermin's CO_2 Capture Process

The four main areas of development in this project include: identification of preferred enzyme; optimization of biocatalyst delivery system; definition of operating limits (using lab-scale reactor data and process modeling); and performing process design, system engineering, fabrication, and commissioning of a bench-scale unit. The integrated bench-scale system will be capable of processing simulated flue gas or interfacing directly to a commercial flue gas slip-stream. The bench-scale absorber contains commercial packing coated with immobilized enzyme.

TABLE 1: PROCESS PARAMETERS SOLVENT

	Units	Current R&D Value	Target R&D Value
Pure Solvent			
Molecular Weight	mol^{-1}	138.2	N/A
Normal Boiling Point	°C	103.7	N/A
Normal Freezing Point	°C	-3.7	N/A
Vapor Pressure @ 15°C	bar	Non-Volatile	N/A
Manufacturing Cost for Solvent	$/kg solution	$0.42	$0.37
Working Solution			
Concentration	kg K_2CO_3/ kg soln.	0.20	0.20
Specific Gravity (15°C/15°C)	-	1.19	N/A
Specific Heat Capacity @ STP	kJ/kg-K	3.54	N/A
Viscosity @ STP	cP	1.95	N/A
Absorption			
Pressure	bar	1.07	1.07
Temperature	°C	40	N/A

TABLE 1: PROCESS PARAMETERS SOLVENT

	Units	Current R&D Value	Target R&D Value
Equilibrium CO_2 Loading	mol/mol K_2CO_3	0.7	0.8
Heat of Absorption	kJ/mol CO_2	28.2	N/A
Solution Viscosity	cP	1.32	1.3
Desorption			
Pressure	bar	1.1	0.5
Temperature	°C	106.3	70
Equilibrium CO_2 Loading	mol CO_2/mol K_2CO_3	0.3 (as regenerated)	0.3
Heat of Desorption	kJ/mol CO_2	28.2	N/A
Proposed Module Design		*(for equipment developers)*	
Flue Gas Flowrate	kg/hr	2,850,000 kg/hr (saturated) 520,000 kg/hr CO_2 captured	
CO_2 Recovery, Purity, and Pressure	% / % / bar	90%, >99%, 1 bar	
Adsorber Pressure Drop	bar	0.04	
Estimated Absorber/Stripper Cost of Manufacturing and Installation	$\frac{\$}{kg/hr}$	$1,000 / kg/hr CO_2 captured	

Definitions:

STP – Standard Temperature and Pressure (15°C, 1 atm).

Pure Solvent – Chemical agent(s), working alone or as a component of a working solution, responsible for enhanced CO_2 absorption (e.g., the amine MEA in an aqueous solution). In this particular case, K_2CO_3 does not react directly with CO_2 and is therefore not a solvent per se, rather it is an environmentally benign, non-toxic salt solution that provides carrying capacity by serving as a proton acceptor supporting the reaction between CO_2 and H_2O (water).

Manufacturing Cost for Solvent – "Current" is market price of chemical, if applicable; "Target" is estimated manufacturing cost for new solvents, or the estimated cost of bulk manufacturing for existing solvents.

Working Solution – The solute-free (i.e., CO_2-free) liquid solution used as the working solvent in the absorption/desorption process (e.g., the liquid mixture of MEA and water).

Absorption – The conditions of interest for absorption are those that prevail at maximum solvent loading, which typically occurs at the bottom of the absorption column. These may be assumed to be 1-atm total flue-gas pressure (corresponding to a CO_2 partial pressure of 0.13 bar) and 40°C; however, measured data at other conditions are preferable to estimated data.

Desorption – The conditions of interest for desorption are those that prevail at minimum solvent loading, which typically occurs at the bottom of the desorption column. Operating pressure and temperature for the desorber/stripper are process-dependent (e.g., an MEA-based absorption system has a typical CO_2 partial pressure of 1.8 bar and a reboiler temperature of 120°C). Measured data at other conditions are preferable to estimated data.

Pressure – The pressure of CO_2 in equilibrium with the solution. If the vapor phase is pure CO_2, this is the total pressure; if it is a mixture of gases, this is the partial pressure of CO_2. Note that for a typical pulverized coal (PC) power plant, the total pressure of the flue gas is about 1 atm and the concentration of CO_2 is about 13.2 percent. Therefore, the partial pressure of CO_2 is roughly 0.132 atm or 0.130 bar.

Concentration – Mass fraction of pure solvent in working solution.

Loading – The basis for CO_2 loadings is moles of pure solvent.

Estimated Cost – Basis is kg/hr of CO_2 in CO_2-rich product gas; assuming targets are met.

Other Parameter Descriptions:

Chemical Solvent Mechanism – The reaction of water (H_2O) with CO_2 in the presence of CA in aqueous K_2CO_3 salt solution is as follows:

1. $H_2O + CO_2 \leftrightarrow HCO_3^- + H^+$
2. $H^+ + CO_3^= \leftrightarrow HCO_3^-$
3. $K_2CO_3(aq) \rightarrow 2K^+ + CO_3^=$
4. Overall: $H_2O + CO_2 + K_2CO_3(aq) \leftrightarrow 2KHCO_3 \quad \Delta H° = 640$ kJ/kg CO_2

The presence of CA increases the rate of conversion of CO_2 to bicarbonate, but does not affect the equilibrium yield of the reaction. The rate of reaction of H_2O with CO_2 in the absence of the enzyme is exceedingly slow, but the enzyme hydrates CO_2 on the order of micro-seconds (kcat = ≈1/micro-second) and is limited only by diffusion.

Solvent Contaminant Resistance – Studies with K_2CO_3 and CA in solution indicate that the enzyme is not inhibited by sulfate, sulfite, nitrite, nitrate, or chloride ions in solution at levels expected for coal flue gas. Divalent metal ions (mercury [Hg2+], lead [Pb2+]) inhibit the activity of soluble CA because the active site in the enzyme itself contains a divalent metal ion (mainly zinc). However, the immobilization and the low solubility of their hydroxide and carbonate salts in carbonate solutions may alleviate some of the decrease in CA activity at high pH.

Solvent Foaming Tendency – The presence of soluble enzyme can contribute to foaming, especially in the stripper, whereas the tendency to foam is mitigated by using immobilized enzyme, retaining enzyme in the absorber and part per million (ppm) quantities of anti-foams.

Flue Gas Pretreatment Requirement – Acid gases do not impact the solvent CO_2 capacity significantly; however, mercury emissions may need to be controlled to avoid loss of CA activity.

Solvent Make-up Requirements – The capture of acid gases such as sulfur dioxide (SO_2) and nitrogen dioxide (NO_2) will reduce carrying capacity over time. Initial tests indicate the loss of capacity to be on the order of 2 percent per year or less. K_2CO_3 is non-volatile and has excellent oxidative stability (an inorganic salt solution); therefore, mainly water make-up is required.

Waste Streams Generated – Deactivated packing would need to be replaced to maintain CA activity on an ongoing basis. Any solids salts precipitated in carbonate solutions need to be separated and disposed appropriately.

Process Design Concept – Figure 1 presents the basic process flow sheet.

Proposed Module Design – Unless noted, flue gas feed pressure is 1.014 bara, temperature is 57°C, and composition leaving the flue gas desulfurization (FGD) unit (wet basis) should be assumed:

Composition (% vol)					Composition (ppmv)	
CO_2	H_2O	N_2	O_2	Ar	SO_x	NO_x
13.17	17.25	66.44	2.34	0.8	42	74

technology advantages

- Ability to capture 90 percent CO_2 with absorption rates competitive with amine-based solvents using an inorganic salt solution that has significantly lower regeneration energy, as well as being non-volatile, oxidative stable, and environmentally benign.
- K_2CO_3 is non-volatile and stable compared to amine solvents; the non-volatile and stable features of K_2CO_3 eliminate the capital costs for the water wash for polishing units to minimize impurities (SO_x, NO_x) that accelerate degradation of amine solvents and for amine re-claimer systems.
- K_2CO_3 solutions can be regenerated with low-grade steam due to lower regeneration temperatures; therefore, more power can be generated resulting in lower auxiliary power requirements, lower unit capital costs, and lower CO_2 capture costs.

R&D challenges

- Flexible immobilization technology needed, which can scale-up and is adaptable to varied carbonate chemistries (K_2CO_3/$KHCO_3$, ammonium carbonate, methyldiethanolamine [MDEA], etc.).
- Improved understanding of costs, optimized column, and energy performance is required from process design and scale-up studies due to the unique nature of the absorber with three-phase heterogeneous catalysis.
- Improved scalable immobilized catalyst production processes to achieve consistent, long-term performance.

results to date/accomplishments

- Demonstrated >87 percent physical protein (CA) retention at absorber conditions with the silica-based sol-gel immobilization technology after 100 hours of testing.
- Demonstrated a 22x improvement in the rate of mass transfer with immobilized enzyme coated on ceramic spheres in a packed column CLR, suggesting good potential to lower absorber heights and reduced capital costs.
- Completed a 200-day endurance test of the immobilized CA enzyme in 20 wt% K_2CO_3 solution with pH 10, 45°C, and a gas flow rate of 400 ml/min (standard) and a liquid flow rate of 20 ml/min. The initial enhancement in activity was 12x, which declined by 54 percent over the 240-day test period.
- In lab-scale testing with sub-bituminous coal flue gas containing SO_x, NO_x, and Hg (20 ppm SO_2, 20 ppm NO_2, and 2 parts per billion by weight [ppbw] Hg), 90 to 95 percent CO_2 capture was achieved and sustained for 23 days using a packed-column absorber containing packing with immobilized CA.
- Modeling calculations show a 16x improvement in the rate of CO_2 absorption by the presence of immobilized CA, which would significantly lower the height of a CO_2 absorber operating on K_2CO_3 from ≈1,300 feet to 80 feet.
- Techno-economic analyses indicate that the regeneration energy could approach 3,200 kJ/kg CO_2; however, a significant reduction in parasitic power was achieved by using low-grade steam that resulted in lower-net capital costs. The incremental COE over a plant without CO_2 capture varied from 68 to 63 percent depending on assumptions.

next steps

- A bench-scale test unit (500 SLPM flue gas, 300 kg 20 percent K_2CO_3/h) was installed, commissioned, and initially tested without the biocatalyst in January 2013. Next steps include testing the bench unit with biocatalyst beginning in May 2013.
- The bench-scale test unit will be operated at NCCC through the end of the project period.
- The capital and operational cost estimates for the full-scale, coal-fired power plant would be revised by June 2013, based on results from bench-scale testing.

available reports/technical papers/presentations

Zaks, A., "Advanced Low Energy Enzyme Catalyzed Solvent for CO_2 Capture," presented at the 2011 NETL Annual CO_2 Capture Technology Meeting, August, 2011, Pittsburgh, PA.

Zaks, A., "Advanced Enzyme-Catalyzed CO_2 Capture in Low-Energy Solvents," presented at the 2012 NETL Annual CO_2 Capture Technology Meeting, July, 2012, Pittsburgh, PA.

Black, S., et al., "Enzyme-Catalyzed Process for Low-Cost CO_2 Separation and Capture," presented at the 2012 MEGA Conference, August, 2012, Baltimore, MD.

DEVELOPMENT OF CHEMICAL ADDITIVES FOR CO_2 CAPTURE COST REDUCTION

primary project goals

Lawrence Berkeley National Laboratory (LBNL) will investigate a novel mixed solvent system that will integrate amine-based and ammonia-based solvents to provide benefits of both systems while avoiding many of their drawbacks.

technical goals

- Develop chemical additives that will reduce the cost of post-combustion capture of carbon dioxide (CO_2) in solvent-based systems.
- Determine the optimal process configuration and operating condition for the transfer of CO_2 in amine solvent to potassium bicarbonate ($KHCO_3$), and then to an ammonium species, resulting in the production of NH_4HCO_3.

technical content

The new solvent system uses a novel solvent transfer approach after the capture of CO_2 from flue gas. Using this approach, the energy demand and the capital cost of solvent regeneration are expected to be significantly reduced compared to the monoethanolamine (MEA) system.

An aqueous solution of amine is used as an absorbent to facilitate a favorable CO_2 absorption kinetic. The amine is chosen such that the CO_2 absorbed can be readily transferred to potassium carbonate (K_2CO_3) in solutions to produce $KHCO_3$, which precipitates when its concentration exceeds the solubility limit. Subsequently, $KHCO_3$ slurry is transported to a reactor where it reacts with an ammonia catalyst to regenerate K_2CO_3 for reuse and concentrated CO_2 for sequestration.

The approach contains the benefits of three solvent systems: amine, K_2CO_3 and ammonia systems. The benefits are: (1) amine's fast CO_2 absorption kinetics; (2) K_2CO_3 and ammonium species' low reagent cost, high chemical stability, and small heat capacity; and (3) ammonium bicarbonate's low decomposition temperature, fast decomposition kinetics, and amenable for high-pressure CO_2 production. The employment of slurry significantly reduces the sensible and latent heat consumed by water in solvent regeneration. The low decomposition temperature of ammonium bicarbonate enables waste heat and/or low-quality steam to be used for the production of concentrated CO_2 gas.

technology maturity:

Bench-Scale, Simulated Flue Gas

project focus:

Chemical Additives for CO_2 Capture

participant:

Lawrence Berkeley National Laboratory (LBNL)

project number:

FWP-FD33EE

NETL project manager:

Elaine Everitt
elaine.everitt@netl.doe.gov

principal investigator:

Shih-ger Chang
LBNL
sgchang@lbl.gov

partners:

N/A

performance period:

6/1/08 – 5/31/13

TABLE 1: PROCESS PARAMETERS

	Units	Current R&D Value	Target R&D Value
Pure Solvent			
Molecular Weight	mol^{-1}	100 – 212	100 – 212
Normal Boiling Point	°C	165 – 252	165 – 252
Normal Freezing Point	°C	(-50) – 28	(-50) – 28
Vapor Pressure @ 15°C	bar	0 – 0.0013	0 – 0.0013
Manufacturing Cost for Solvent	$/kg	30 – 250	30 – 250
Working Solution			
Concentration	kg/kg	0.3 – 0.6	0.3 – 0.6
Specific Gravity (15°C/15°C)	-	0.9 – 1.7	0.9 – 1.7
Specific Heat Capacity @ STP	kJ/kg-K	3 – 4	3 – 4
Viscosity @ STP	cP	20 – 40	20 – 40
Absorption			
Pressure	bar	1.01	1 – 1.5
Temperature	°C	40 – 70	30 – 80
Equilibrium CO_2 Loading	mol/mol	0.7 – 0.9	0.7 – 0.9
Heat of Absorption	kJ/mol CO_2	65 – 75	65 – 75
Solution Viscosity	cP	10 – 15	10 – 15
Desorption			
Pressure	bar	2.7	1 – 75
Temperature	°C	80 – 120	80 – 300
Equilibrium CO_2 Loading	mol/mol	0.4 – 0.6	0.4 – 0.6
Heat of Desorption	kJ/mol CO_2	85 – 92	85 – 92
Proposed Module Design		*(for equipment developers)*	
Flue Gas Flowrate	kg/hr		
CO_2 Recovery, Purity, and Pressure	% / % / bar	90 %, 99%,	
Adsorber Pressure Drop	bar		
Estimated Absorber/Stripper Cost of Manufacturing and Installation	$ / kg/hr		

Definitions:

STP – Standard Temperature and Pressure (15°C, 1 atm).

Pure Solvent – Chemical agent(s), working alone or as a component of a working solution, responsible for enhanced CO_2 absorption (e.g., the amine MEA in an aqueous solution).

Manufacturing Cost for Solvent – "Current" is market price of chemical, if applicable; "Target" is estimated manufacturing cost for new solvents, or the estimated cost of bulk manufacturing for existing solvents.

Working Solution – The solute-free (i.e., CO_2-free) liquid solution used as the working solvent in the absorption/desorption process (e.g., the liquid mixture of MEA and water).

Absorption – The conditions of interest for absorption are those that prevail at maximum solvent loading, which typically occurs at the bottom of the absorption column. These may be assumed to be 1 atm total flue-gas pressure (corresponding to a CO_2 partial pressure of 0.13 bar) and 40°C; however, measured data at other conditions are preferable to estimated data.

Desorption – The conditions of interest for desorption are those that prevail at minimum solvent loading, which typically occurs at the bottom of the desorption column. Operating pressure and temperature for the desorber/stripper are process-dependent (e.g., an MEA-based absorption system has a typical CO_2 partial pressure of 1.8 bar and a reboiler temperature of 120°C). Measured data at other conditions are preferable to estimated data.

Pressure – The pressure of CO_2 in equilibrium with the solution. If the vapor phase is pure CO_2, this is the total pressure; if it is a mixture of gases, this is the partial pressure of CO_2. Note that for a typical pulverized coal (PC) power plant, the total pressure of the flue gas is about 1 atm and the concentration of CO_2 is about 13.2 percent. Therefore, the partial pressure of CO_2 is roughly 0.132 atm or 0.130 bar.

Concentration – Mass fraction of pure solvent in working solution.

Loading – The basis for CO_2 loadings is moles of pure solvent.

Estimated Cost – Basis is kg/hr of CO_2 in CO_2-rich product gas; assuming targets are met.

Other Parameter Descriptions:

Chemical/Physical Solvent Mechanism –

$$\textbf{Absorber: Amine} + CO_2 \leftrightarrow \textbf{Amine-}CO_2$$

$$\textbf{Recirculation tank: Amine-}CO_2 + K_2CO_3 + H_2O \leftrightarrow \textbf{Amine} + 2\ KHCO_3\downarrow$$

$$\textbf{Regenerator: } 2\ KHCO_3 + (NH_4+) \rightarrow K_2CO_3 + H_2O + CO_2\uparrow + (NH_4+)$$

Solvent Contaminant Resistance – Sulfur dioxide (SO_2) has little impact to amine as amine is regenerated by chemical rather than thermal methods. It is expected that the amine employed should be much more resistance to oxygen (O_2) and nitrogen oxides (NO_x) than MEA. Nevertheless, the reaction kinetics and products of O_2 and NO_x with amine need to be investigated.

Solvent Foaming Tendency – Solvent foaming was not observed in laboratory experiments.

Flue Gas Pretreatment Requirements – Flue gas from coal-fired power plants equipped with conventional pollution control systems does not require additional pretreatment. Residual SO_2 after dissolution can be separated from the liquid stream as K_2SO_3/K_2SO_4 precipitates. The formation of heat-stable salts with amine should not be an issue, as amine is regenerated by chemical rather than thermal methods involving steam.

Solvent Make-Up Requirements – Amine is confined in the low-temperature absorber and recirculation tank loop. As a result, the thermal degradation, chemical degradation (due to the reactions with flue gas trace constituents), and emission loss (due to the volatility) are expected to be insignificant compared to the benchmark MEA process. A long-term integration test that lasts a significant number of hours will be needed to determine the amine's make-up requirements. $KHCO_3$ and K_2CO_3 are stable chemicals and do not degrade under high temperature operation in the regenerator.

Waste Streams Generated – Waste streams from the absorber/recirculation tank low-temperature loop may contain trace amount of fly ash, dissolved NO_x, and amine degradation products. Waste streams from the stripper are expected to contain K_2SO_3 and K_2SO_4, if SO_2 polishing is not equipped ahead of the CO_2 capture system.

Process Design Concept –

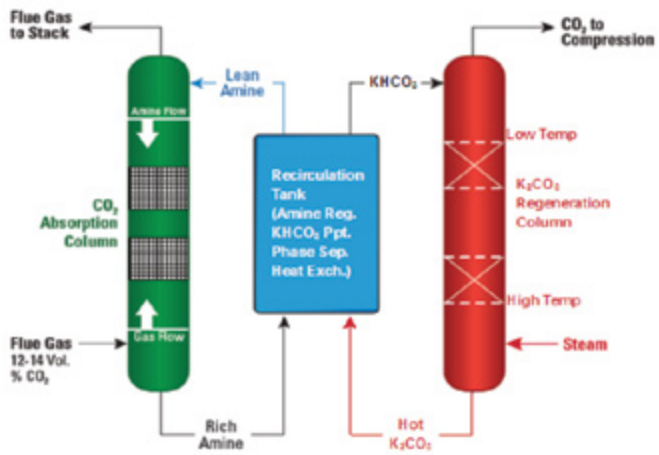

Figure 1: Process Design Concept

Proposed Module Design – Unless noted, flue gas feed pressure is 1.014 bara, temperature is 57°C, and composition leaving the flue gas desulfurization (FGD) unit (wet basis) should be assumed:

Composition (% vol)					Composition (ppmv)	
CO_2	H_2O	N_2	O_2	Ar	SO_x	NO_x
13.17	17.25	66.44	2.34	0.8	42	74

technology advantages

- Possession of high-CO_2 absorption kinetics, resulting in an acceptable absorber capital cost.
- Reduction of processing water, resulting in reduced solvent regeneration energy demands.
- Employment of low-heat capacity $KHCO_3/K_2CO_3$, resulting in reduced sensible heat demands.
- Reduction of reagent loss and equipment corrosion, resulting in reduced operation costs.
- Reduction of emission as $KHCO_3$ can be treated at high temperature without any emissions of heat degradable harmful products.

R&D challenges

- Handling of slurry/solid.
- Design of a regenerator for decomposing $KHCO_3$ slurry with pressurized steam.
- Optimization of a transformative solvent system involving chemical regeneration of amine requires a significant effort.

results to date/accomplishments

- Evaluated more than 50 amines and amino acid salts for CO_2 absorption amenable for the new solvent regeneration approach.
- Compared relative CO_2 absorption efficiencies of various lean amines regenerated by chemical methods.
- Investigated conditions required for phase separation and determined phase diagrams following chemical regeneration of lean amine in the recirculation tank in attempt to understand its chemical and physical behaviors.
- Elucidated the kinetics and mechanisms of CO_2 absorption and chemical regeneration involved in the new solvent system.

- Constructed a stripper system equipped with a calorimeter for the determination of K_2CO_3 regeneration rates and energy demands. Preliminary result indicated that K_2CO_3 regeneration energy demand was 2,079 kJ/kg CO_2 at steady state conditions, which is approximately 40 percent less than that of MEA.
- Performed a semi-continuous integration test encompassing CO_2 absorption in the absorber, amine regeneration in the recirculation tank, and K_2CO_3 regeneration and CO_2 production in the stripper.
- Performed mass and water balances, and developed a stream table of the bench-scale new solvent system.

next steps

Project completed May 31, 2013.

available reports/technical papers/presentations

Chang, S-g, "Developing Chemical Additives for Aqueous Ammonia to Reduce CO_2 Capture Cost," presented at the Annual NETL CO_2 Capture Technology for Existing Plants Meeting, Pittsburgh, Pennsylvania, March 2009. *http://www.netl.doe.gov/publications/proceedings/09/CO2/pdfs/11231%20LBNL%20solvents%20%28Chang%29%20mar09.pdf*.

Chang, S-g, "Development of Chemical Additives for CO_2 Capture Cost Reduction," presented at the 2010 NETL CO_2 Capture Technology Meeting, Pittsburgh, Pennsylvania, September 2010. *http://www.netl.doe.gov/publications/proceedings/10/co2capture/presentations/monday/Ted%20Chang-LBNL.pdf*.

Chang, S-g, "Development of Chemical Additives for CO_2 Capture Cost Reduction," presented at the 2011 NETL CO_2 Capture Technology Meeting, Pittsburgh, Pennsylvania, August 2011. *http://www.netl.doe.gov/publications/proceedings/11/co2capture/presentations/2-Tuesday/23Aug11-Chang-LBNL-Additives%20for%20Reducing%20CO2%20Capture%20Costs.pdf*.

Chang, S-g, "Development of Chemical Additives for CO_2 Capture Cost Reduction," presented at the 2012 NETL CO_2 Capture Technology Meeting, Pittsburgh, Pennsylvania, August 2012. *http://www.netl.doe.gov/publications/proceedings/12/co2capture/presentations/2-Tuesday/T%20Chang-LBNL-Additives.pdf*.

DEVELOPMENT OF AN ENERGY-EFFICIENT, ENVIRONMENTALLY FRIENDLY SOLVENT FOR THE CAPTURE OF CO_2

technology maturity:
Bench-Scale, Simulated and Actual Flue Gas

project focus:
Optimized Solvent Formulation

participant:
Babcock & Wilcox

project number:
FE0007716

NETL project manager:
Bruce Lani
bruce.lani@netl.doe.gov

principal investigator:
George Farthing
Babcock & Wilcox
gafarthing@babcock.com

partners:
University of Cincinnati
First Energy

performance period:
10/1/11 – 4/30/13

primary project goals

This Babcock & Wilcox Power Generation Group, Inc., (B&W) project identifies concentrated piperazine (PZ)-based solvent formulations that improve overall solvent and system performance.

technical goals

- Improve system operability and reliability.
- Minimize environmental impacts.
- Reduce corrosion potential.
- Maximize solvent durability.

technical content

B&W is characterizing and optimizing the formulation of a novel solvent for the capture of carbon dioxide (CO_2) at coal-fired utility plants. The work will be performed on a solvent that has been identified through a five-year solvent development program conducted at B&W. The solvent formulations of interest comprise concentrated solutions of a cyclic diamine, PZ. Recent testing at B&W indicates that blends of concentrated PZ with other compounds have the potential to perform substantially better than PZ itself. The objective of the proposed work is to lower the total cost of solvent-based CO_2 capture systems by identifying formulations that will improve overall solvent and system performance.

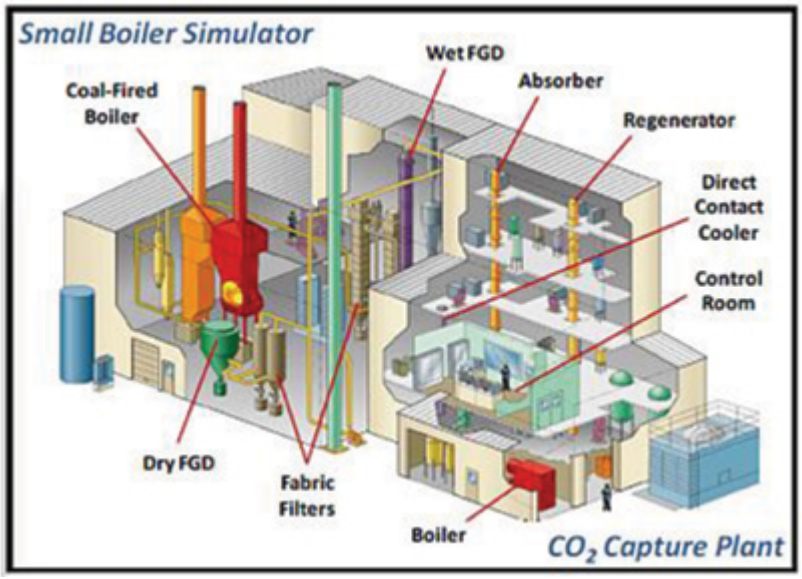

Figure 1: B&W 7-Ton/Day Pilot Facility

Other Parameter Descriptions:

Chemical/Physical Solvent Mechanism – The CO_2-reactive species (there may be other non-reactive species) in the solvent formulation may include amines, carbonates, or amino acid salts in combination with concentrated PZ. Amine solvents are grouped according to their molecular structure. Carbonate and amine reactions with CO_2 can be summarized as follows:

$$\textbf{Carbonates: } CO_3^{=} + CO_2 + H_2O \leftrightarrow 2\ HCO_3^-$$

$$\textbf{Hindered and tertiary amines: } CO_2 + R_3N + H_2O \leftrightarrow HCO_3^- + R_3NH^+$$

$$\textbf{Primary and secondary amines: } CO_2 + 2R_2NH \leftrightarrow R_2NCOO^- + R_2NH_2^+$$

Solvent Contaminant Resistance – Amine solvents chemically degrade in a variety of ways (thermal degradation due to exposure to the high temperatures of the regeneration process, oxidative degradation due the presence of oxygen in the flue gas, carbamate polymerization, etc). Degradation reactions can be accelerated by the presence of degradation or corrosion products and heat-stable salts, and through the catalytic effects of various metals (possibly originating with the coal fly ash). It is a central objective of this project to minimize solvent degradation and the attendant production of potentially hazardous chemical species.

Flue Gas Pretreatment Requirements – Flue gas supplied to the CO_2 capture system will need to be cooled to approximately 40°C and be relatively free of contaminants. Concentrations of sulfur dioxide (SO_2) and nitrogen dioxide (NO_2) will need to be less than about 10 parts per million (ppm) – preferably around 1 ppm.

Solvent Make-Up Requirements – Solvent makeup is required to offset solvent losses due to volatility, degradation, the formation of heat stable salts, etc. PZ-based solvents are expected to minimize such losses due to the lower volatility and better resistance to thermal degradation exhibited by PZ relative to solvents such as monoethanolamine (MEA). Work during the project is specifically aimed at reducing such losses.

Waste Streams Generated – Waste streams generated by the process will be similar to those generated by convention amine processes, including reclaimer waste solids; spent carbon and particulate filter cake from solvent filtration equipment; and, potentially, waste water. It is the objective of this project to minimize the environmental impact of these streams through careful selection of the solvent formulation and operating conditions.

Process Design Concept – The CO_2 capture process, illustrated in Figure 2, comprises a relatively conventional absorption/stripping process.

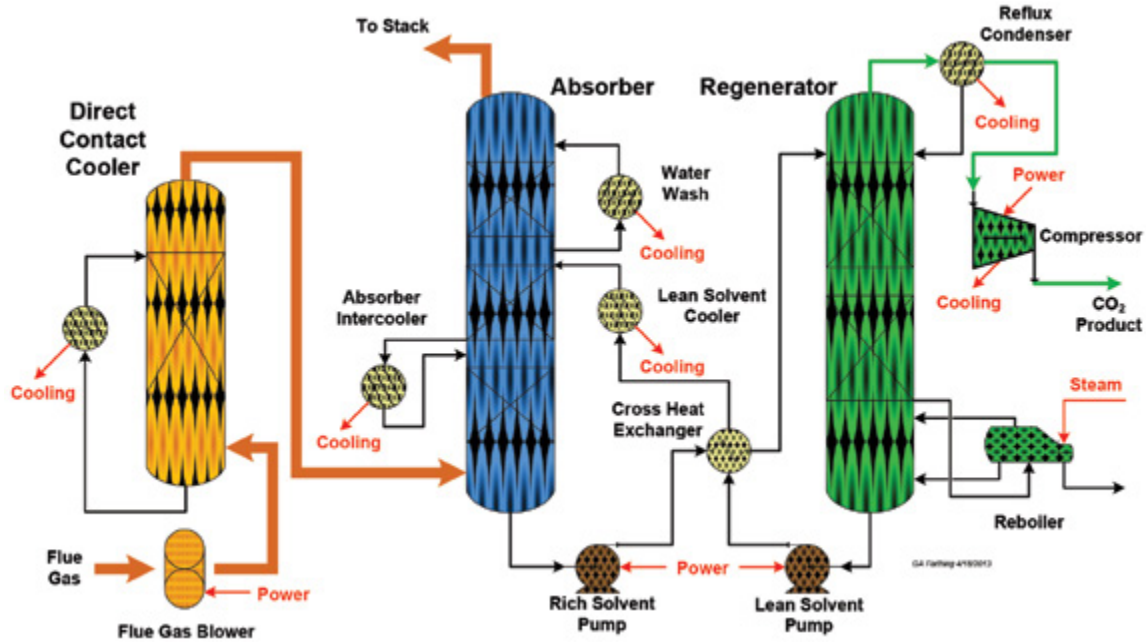

Figure 2: Schematic of Solvent-Based CO_2 Capture Process

technology advantages

Piperazine, used alone, has demonstrated high rates of absorption and low regeneration energy. Recent testing at B&W indicates that blends of concentrated PZ with other organic compounds may perform substantially better than PZ alone.

R&D challenges

- Selection of a solvent formulation involves compromises which seek to optimally balance competing effects. Using limited and potentially non-representative data generated in laboratory-scale equipment is extremely challenging. B&W will use previous solvent development work to correlate laboratory results with pilot-scale performance.
- Some of the improvement goals include improved system operability and reliability, minimizing environmental impacts, reducing corrosion potential, and maximizing solvent durability.

results to date/accomplishments

- A list of candidate solvent formulations was developed and refined. This work comprised evaluations regarding overall solvent performance criteria, identification of primary active components, and verification of wet chemistry analytical techniques for CO_2 loading and alkalinity.
- Several modeling approaches were identified. Tools considered include equilibrium models, semi-empirical rate-based models, and rigorous rate-based models. Tools for the prediction of process economics were also evaluated.
- Characterization tests in B&W's Wetted-Wall Column (WWC) were completed on a baseline concentrated PZ solvent and 12 candidate solvent formulations. The liquid film mass transfer coefficient (kg), as well as equilibrium partial pressure of CO_2 (P_{CO2}*), were obtained from each WWC test. Other parameters, such as heat of absorption and CO_2 working capacity, were also derived from these experimental data. Preliminary solvent formulation performance was then estimated with in-house, semi-empirical models.
- Solvent volatility and solubility testing was performed on several candidate formulations of concentrated PZ solutions containing salts of amino acids, carbonates, and other amines. Also evaluated were organic additives designed to improve the solubility of PZ and its carbamates. In addition, it was found necessary to characterize candidate formulations with respect to their viscosities in order to ensure good mass transfer performance and acceptable operability.
- Installation of the bench-scale Continuous Solvent Degradation System (CSDS) was completed. The CSDS will enable comprehensive investigations of proposed solvent formulation degradation under representative operating conditions. It is intended to simulate key features of industrial CO_2 capture processes, including cyclical absorption and regeneration process conditions. The CSDS is designed for continuous, unattended operation for tests lasting 100 to 1,000 hours or more.

next steps

- Identify several candidate formulations of a concentrated PZ-based solvent for detailed characterization and evaluation.
- Complete Budget Period 1 reporting requirements.
- Close out contract. B&W has elected to terminate the cooperative agreement effective April 30, 2013.

available reports/technical papers/presentations

Farthing, G., "Optimized Solvent for Energy-Efficient, Environmentally Friendly Capture of CO_2 at Coal-Fired Power Plants," presented at the 2012 NETL CO_2 Capture Technology Meeting, Pittsburgh, Pennsylvania, July 2012. *http://www.netl.doe.gov/publications/proceedings/12/co2capture/presentations/2-Tuesday/G%20Farthing-B%26W-Optimized%20Solvent.pdf*.

POST-COMBUSTION CO_2 CAPTURE FOR EXISTING PC BOILERS BY SELF-CONCENTRATING AMINE ABSORBENT

primary project goals

3H Company set out to experimentally and analytically confirm the feasibility of the proposed Self-Concentrating Absorbent CO_2 Capture Process, with the goal of developing a sound engineering design, supported by laboratory data and economic justification, for a flue gas slipstream-testing unit.

technical goals

- Perform laboratory screening experiments to identify different absorbent/solvent combinations that can exhibit the "self-concentrating" carbon dioxide (CO_2) absorption effect, and conduct fundamental absorption/regeneration rates and physical and chemical property measurements to allow its process design and techno-economic feasibility to be evaluated.
- Conduct experiments to demonstrate the process under dynamic column testing conditions and to develop a process design package for a slipstream testing facility.

technical content

This project examined an innovative and proprietary CO_2 capture technology developed by 3H Company. The process is based on amine and/or other chemical absorbents in a non-aqueous solvent that can phase separate into a distinct CO_2-rich liquid phase upon reaction with CO_2. The process was demonstrated using commercially available amines and solvents. The technology has the potential of not only greatly reducing the energy penalty associated with regeneration compared to conventional monoethanolamine (MEA)-based processes, but it can also increase the amine CO_2 absorption rate. Preliminary experimental data shows that the proposed Self-Concentrating Amine Absorbent process has the potential of reducing the total regeneration energy by as much as 70 percent.

The technology removes CO_2 from power plant flue gas, using an absorbent (e.g., amine or special designed chemical species) and a matched solvent, which rapidly forms two immiscible liquid phases upon absorbing CO_2 (Figure 1). The process has been demonstrated in the laboratory for a number of specific amine/solvent pairs. The solvents employed are non-aqueous. The novelty of the concept rests on the duel hydrophobic/hydrophilic functionality of the CO_2 absorbents (e.g., amine), the stability of the "CO_2-rich" reaction product, and its solubility behavior within the non-aqueous solvent system employed. When an amine is used as the CO_2 absorbent, it is reasonable to assume that the chemistry follows that for an aqueous-based system. However, in the presence of a Self-Concentrating Solvent, the CO_2:amine reaction forms a stable product that can be solvated in higher concentration within the solvent system. The chemistry and mechanism of the process requires additional research and development (R&D).

technology maturity:

Laboratory-Scale, Simulated Flue Gas

project focus:

CO_2 Capture with Self-Concentrating Amine Absorbent

participant:

3H Company

project number:

FE0004274

NETL project manager:

Morgan Mosser
morgan.mosser@netl.doe.gov

principal investigator:

Liang Hu
3H Company
lianghu59@yahoo.com

partners:

Nexant, Inc.
LG&E and KU Energy LLC
EPRI

performance period:

10/1/10 – 1/31/13

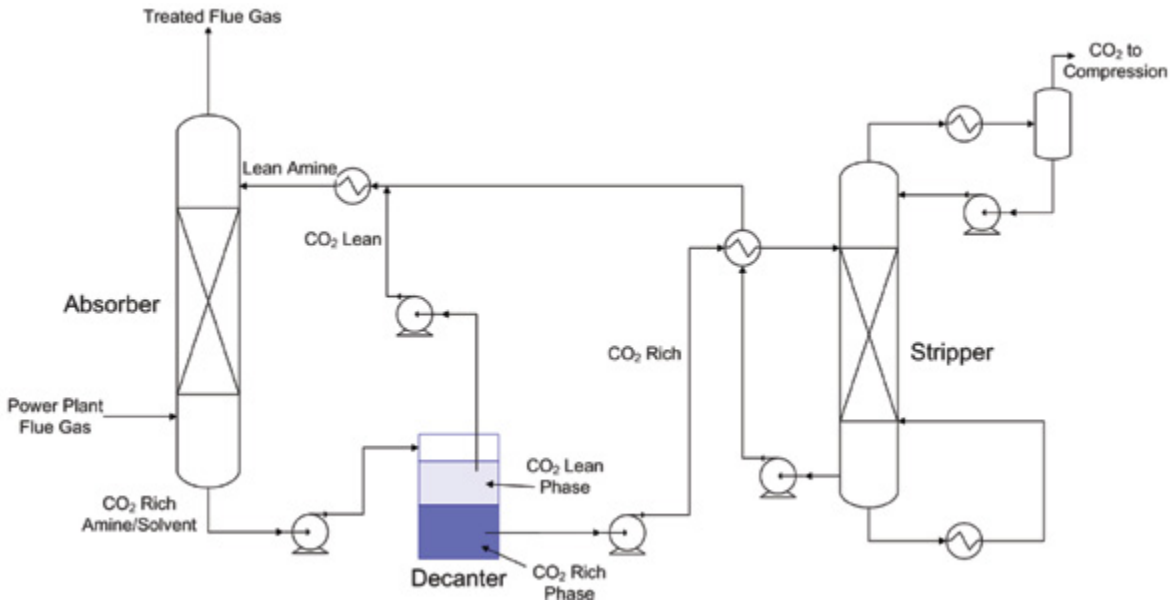

Figure 1: Concept of the Proposed Self-Concentrating Amine Absorbent Process

Conventional 30 wt% MEA-based CO_2 capture is considered to be the benchmark for performance. A typical heat of regeneration for a 30 percent MEA CO_2 capture process is about 1,934 Btu/lb CO_2, as cited in the literature, and only about 1/3 of the regeneration energy is used to break the amine:CO_2 bonds. Minimizing the overall heat of regeneration by using a unique absorbent/solvent system is the key to the Self-Concentrating Absorbent process. Figure 2 shows a flow scheme for the concept, using amine as the CO_2 absorbent. The flow scheme is similar to a conventional MEA process, with the exception that a decanter is incorporated downstream of the absorber to allow the "rich CO_2 liquid" to be fully phase separated before sending it onto the stripper. Only the "rich CO_2 liquid" is subjected to regeneration, at a significant reduced volume as compared to a conventional MEA process. Overall, a 70 percent reduction in heat of regeneration can be achieved with the Self-Concentrating Absorbent process, taking into consideration that (1) only the "rich CO_2/solvent liquid" will be sent onto regeneration with minimum excess solvent, and (2) the solvent has a lower heat capacity and heat of vaporization than water. Because the process uses a non-aqueous system, many of the problems associated with MEA, including degradation due to corrosion, oxygen degradation, and the formation of stable salts, are expected to be mitigated. These types of effects, along with the potential environmental emissions and health problems associated with the use of the non-aqueous process, will need to be investigated in more detail.

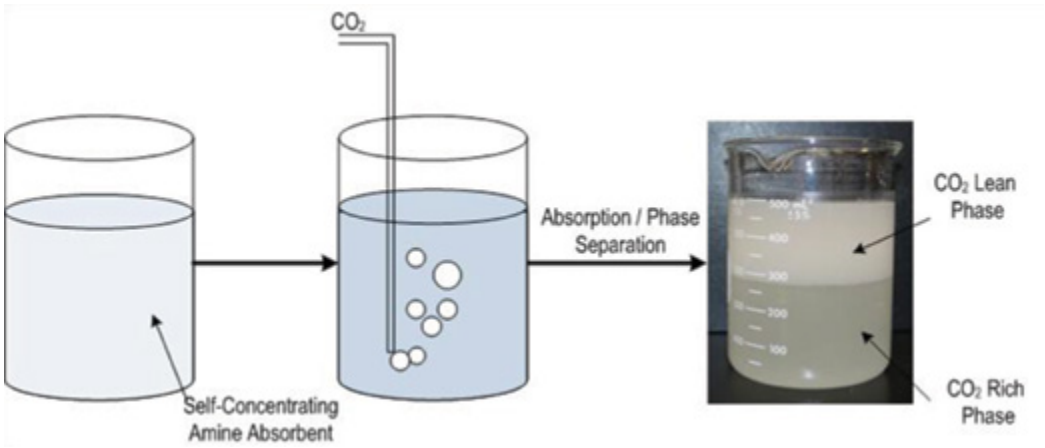

Figure 2: Simplified Flow Scheme of the Proposal Self-Concentrating Amine Absorbent Concept

technology advantages

- Lower regeneration energy requirements.
- Minimal degradation due to corrosion, oxygen degradation, and the formation of stable salts.

R&D challenges

- The chemistry, kinetics, and mass-transfer characteristics governing the diffusion of CO_2 into the liquid phase where it reacts with amine within the non-aqueous solvent, etc., are unknown.
- The self-concentrating process involves the phase separation of the "CO_2 rich" reaction product from the solvent system, of which its stability, composition, phase behavior, thermodynamic miscibility, and solubility limit are unknown.
- It is necessary to develop some basic theoretical and mechanistic understanding of the process so that R&D will not have to be based purely on an empirical approach.

results to date/accomplishments

- Completed preliminary system analysis and process design study comparing the 3H process to 30 percent MEA.
- Completed bench-scale screening, property measurement, and testing to identify all four promising Self-Concentrating Absorbent/Solvent pairs for more detailed characterization and evaluation.
- Completed down-selection to two promising Self-Concentrating Absorbent/Solvent pairs and commenced detailed characterization and analysis of these two final absorbent/solvent pairs.

next steps

This project ended on January 31, 2013.

available reports/technical papers/presentations

Hu, L., "Post-Combustion CO_2 Capture for Existing PC Boilers by Self-Concentrating Absorbent," presented at the 2012 NETL CO_2 Capture Technology Meeting, Pittsburgh, Pennsylvania, July 2012. *http://www.netl.doe.gov/publications/proceedings/12/co-2capture/presentations/2-Tuesday/L%20Hu-%203H%20Company-Self-concentrating%20Absorbent.pdf*.

IONIC LIQUIDS: BREAKTHROUGH ABSORPTION TECHNOLOGY FOR POST-COMBUSTION CO_2 CAPTURE

primary project goals

The University of Notre Dame set out to develop a new ionic liquid (IL) solvent capture process resulting in a small increase in cost of electricity (COE) compared to currently available capture technologies by overcoming viscosity and capacity issues impacting cost and performance of ILs via "proof-of-concept" exploration and laboratory-/bench-scale testing of a variety of IL formulations.

technical goals

- Design and synthesize one or more IL absorbents tailored for post-combustion carbon dioxide (CO_2) capture.
- Perform atomistic-level classical and quantum calculations to engineer IL structures maximizing CO_2 carrying capacity with minimal regeneration costs.
- Measure or accurately estimate all physical solvent properties essential for detailed engineering and design calculations:
  - Gas solubility, viscosity, heat of absorption, heat capacity, mass transfer coefficients, thermal decomposition, chemical stability, and corrosivity.
- Complete detailed systems and economic analysis.
- Demonstrate CO_2 capture technology on a continuous lab-scale unit.

technical content

ILs are salts that are liquid at room temperature. They are known to have high intrinsic physical solubility for CO_2. Examples of ILs are illustrated in Figure 1.

technology maturity:

Laboratory-Scale, Simulated Flue Gas

project focus:

Ionic Liquids

participant:

University of Notre Dame

project number:

FC26-07NT43091

NETL project manager:

David Lang
david.lang@netl.doe.gov

principal investigator:

Edward J. Maginn
University of Notre Dame
ed@nd.edu

partners:

Babcock and Wilcox
DTE
Trimeric Corporation
Koei Chemical

performance period:

2/28/07 – 9/30/12

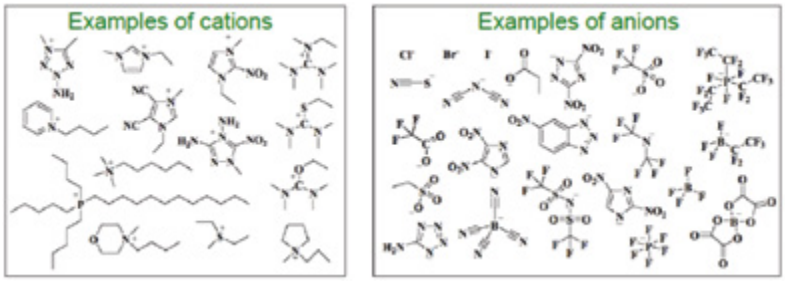

Figure 1: Examples of Ionic Liquids

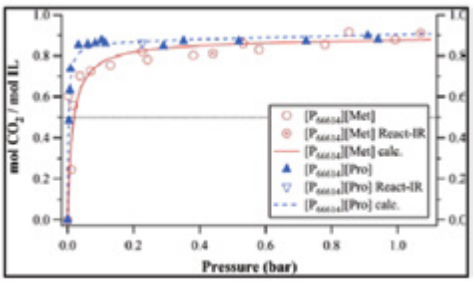

Figure 2: Isotherms confirming 1:1 binding

A close-to-conventional absorber/stripper process is assumed for process modeling and costing. Process simulation has been used to evaluate the sensitivity of a representative 500-MW (gross capacity), coal-fired power plant CO_2 capture process for the properties of ILs. The results were used to guide the development of the next generation of ILs. Salient project details include:

- Anion/cation functionalization: Notre Dame has developed both 1:1 and 2:1 (IL:CO_2) stoichiometries by adding chemical functionality to the anion and cation, respectively. Molecular modeling calculations were used to identify anion-functionalized ILs with minimal increase in solvent viscosity after CO_2 absorption. Two ILs (NDIL0046 and NDIL0157) were identified. NDIL0046 was used for lab-scale experimental tests, and data on NDIL0157 was used for techno-economic analysis.
- Enthalpy of reaction: Process modeling indicated that the binding strength of NDIL0046 needed to be improved, and a new IL (NDIL0157) with optimal enthalpy of reaction and lower heat capacity was identified. Optimal reaction enthalpy leads to higher CO_2 solvent capacities, reduced solvent circulation rate, and lowered sensible heating load.

Results show much lower parasitic energy compared with a monoethanolamine (MEA) system. From techno-economic analysis, it was estimated that the parasitic electricity losses in the reboiler are reduced by 36 percent, compression load increased by 14 percent, and the auxiliary losses in CO_2 capture are lowered by 34 percent. The best-case IL (NDIL0157) has almost the same increase in levelized cost of electricity (LCOE) compared with MEA due to higher capital costs for the CO_2 capture system.

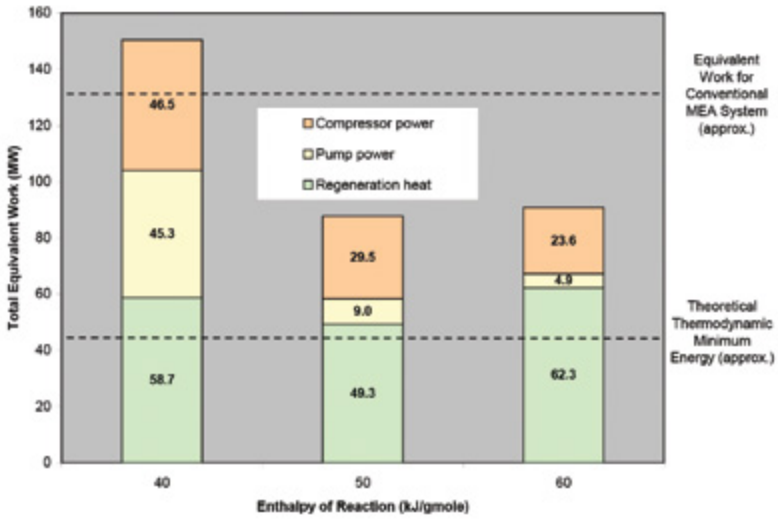

Figure 3: Results from Sensitivity Studies on the Parasitic Power Requirement of Ionic Liquid Solvents

TABLE 1: PROCESS PARAMETERS FOR IONIC LIQUID SOLVENTS

	Units	Current R&D Value	Target R&D Value
Pure Solvent			
Molecular Weight	mol^{-1}	575	322
Normal Boiling Point	°C	N/A - does not boil	N/A - does not boil
Normal Freezing Point	°C	< -10oC	< -10oC
Vapor Pressure @ 15°C	bar	Essentially zero	Essentially zero
Manufacturing Cost for Solvent	$/kg	$20/kg	< $15/kg
Working Solution			
Concentration	kg/kg	0.998	> 0.9
Specific Gravity (15°C/15°C)	-	0.907	≈1.0
Specific Heat Capacity @ STP	kJ/kg-K	2.25	<2.3
Viscosity @ STP	cP	158 @40 c	< 100
Absorption			
Pressure	bar	1.03	1
Temperature	°C	40-52	40-52
Equilibrium CO_2 Loading	mol/mol	0.167	0.988
Heat of Absorption	kJ/mol CO_2	43	54
Solution Viscosity	cP	129	< 100
Desorption			
Pressure	bar	1.3	1-3
Temperature	°C	120-188	120-204
Equilibrium CO_2 Loading	mol/mol	0.041	0.51
Heat of Desorption	kJ/mol CO_2	43	54
Proposed Module Design		*(for equipment developers)*	
Flue Gas Flowrate	kg/hr	N/A	
CO_2 Recovery, Purity, and Pressure	% / % / bar	N/A	
Adsorber Pressure Drop	bar	N/A	
Estimated Absorber/Stripper Cost of Manufacturing and Installation	$\frac{\$}{kg/hr}$	N/A	

Definitions:

STP – Standard Temperature and Pressure (15°C, 1 atm).

Pure Solvent – Chemical agent(s), working alone or as a component of a working solution, responsible for enhanced CO_2 absorption (e.g., the amine MEA in an aqueous solution).

Manufacturing Cost for Solvent – "Current" is market price of chemical, if applicable; "Target" is estimated manufacturing cost for new solvents, or the estimated cost of bulk manufacturing for existing solvents.

Working Solution – The solute-free (i.e., CO_2-free) liquid solution used as the working solvent in the absorption/desorption process (e.g., the liquid mixture of MEA and water).

Absorption – The conditions of interest for absorption are those that prevail at maximum solvent loading, which typically occurs at the bottom of the absorption column. These may be assumed to be 1 atm total flue-gas pressure (corresponding to a CO_2 partial pressure of 0.13 bar) and 40°C; however, measured data at other conditions are preferable to estimated data.

Desorption – The conditions of interest for desorption are those that prevail at minimum solvent loading, which typically occurs at the bottom of the desorption column. Operating pressure and temperature for the desorber/stripper are process-dependent (e.g., an MEA-based absorption system has a typical CO_2 partial pressure of 1.8 bar and a reboiler temperature of 120°C). Measured data at other conditions are preferable to estimated data.

Pressure – The pressure of CO_2 in equilibrium with the solution. If the vapor phase is pure CO_2, this is the total pressure; if it is a mixture of gases, this is the partial pressure of CO_2. Note that for a typical pulverized-coal power plant, the total pressure of the flue gas is about 1 atm and the concentration of CO_2 is about 13.2 percent. Therefore, the partial pressure of CO_2 is roughly 0.132 atm or 0.130 bar.

Concentration – Mass fraction of pure solvent in working solution.

Loading – The basis for CO_2 loadings is moles of pure solvent.

Estimated Cost – Basis is kg/hr of CO_2 in CO_2-rich product gas; assuming targets are met.

Other Parameter Descriptions:

Chemical/Physical Solvent Mechanism – A 1:1 reaction with CO_2 and the basic group on the anion of the IL.

Solvent Contaminant Resistance – Resistant to air; have not evaluated resistance to other contaminants.

Solvent Foaming Tendency – Low.

Flue Gas Pretreatment Requirements – Flue gas desulfurization (FGD) plus polishing column to get to 10 parts per million (ppm) sulfur oxide (SO_x).

Solvent Make-Up Requirements – 3.15 tons/day for a 550-MW net plant.

Waste Streams Generated – Degraded solvent waste; negligible vapor emissions.

Process Design Concept – Flowsheet/block flow diagram, if not included above.

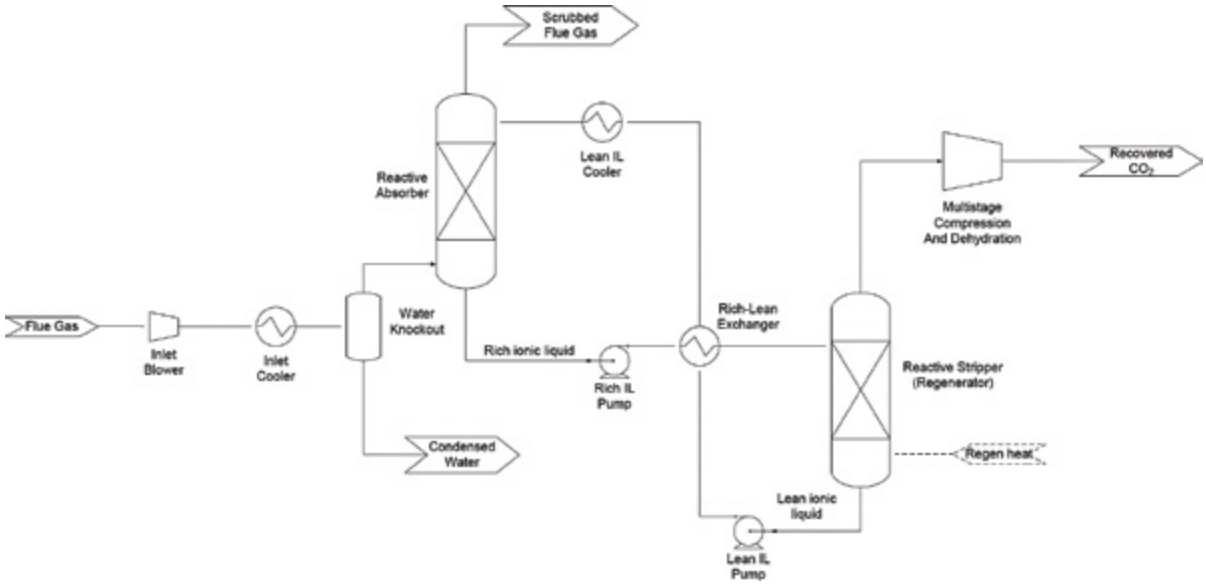

Figure 4: Schematic of Process Design Concept

Proposed Module Design – Unless noted, flue gas feed pressure is 1.014 bara, temperature is 57°C, and composition leaving the flue gas desulfurization (FGD) unit (wet basis) should be assumed:

Composition (% vol)					Composition (ppmv)	
CO_2	H_2O	N_2	O_2	Ar	SO_x	NO_x
13.17	17.25	66.44	2.34	0.8	42	74

technology advantages

- Low volatility and good thermal stability.
- Wide liquidus range.
- Net-CO_2 uptake by solvent can be varied by tuning the enthalpy of CO_2 absorption (10 to 80 kJ/mol) through a combination of computational methods and experimental synthesis.
- Anhydrous absorption process.
- The viscosity of the current generation of ILs (NDIL0046) does not change significantly with CO_2 absorption.

R&D challenges

- The solvent CO_2 capacity (on a weight basis) should be higher than that for the best-case scenario (NDIL0157) to lower-solvent recirculation rates and reduce absorber costs.
- The effects of water on the corrosion behavior and CO_2 reactivity of the ILs need to be examined in greater detail, though preliminary results show negligible corrosion for NDIL0046 + carbon steel.
- The chemically functionalized IL solvent mass-transfer characteristics/viscosity need to be improved to lower capital and operating costs.
- Low-cost commercial synthesis routes for Generation III ILs are required to lower operating costs.

results to date/accomplishments

All project phases (I, II, and III) are complete. Key accomplishments to date include:

- Discovered and synthesized a new class of non-aqueous ILs reacting with 1:1 stoichiometry, and with no increase in viscosity following CO_2 absorption.
- Developed molecular modeling techniques that enabled the computation of key properties of ILs from first principles, and tuned the binding strength of ILs to optimize process economics.
- Demonstrated that the NDIL0046 IL had significantly lower corrosion rates compared to aqueous MEA, indicating that lower-cost materials could be used for absorber and heat exchangers.
- Techno-economic analysis on the best IL to date (NDIL0157) suggests favorable COE and significantly lower parasitic energy losses compared to aqueous MEA (U.S. Department of Energy [DOE]/National Energy Technology Laboratory [NETL] Baseline Case 12).
- Developed unique experimental techniques, including the ability to monitor the infrared spectrum of the IL as it absorbs CO_2, and then use this information to determine reaction rates and mechanisms.

next steps

The project ended on September 30, 2012. Recommendations for further steps include:

- Scale-up of experiments to the next level using synthetic flue gas and slipstream tests.
- The operating performance of ILs (mass-transfer characteristics, viscosity) would be improved.
- Process chemistry improvements needed to make ILs at tonne-scales for lower cost would be investigated.
- IL toxicity and long-term stability would also be examined.

available reports/technical papers/presentations

M. McCready et al., "Ionic Liquids: Breakthrough Absorption Technology for Post-Combustion CO_2 Capture," presented at the 2012 NETL CO_2 Capture Technology Meeting, Pittsburgh, Pennsylvania, July, 2012. Available at: *http://www.netl.doe.gov/publications/proceedings/12/co2capture/presentations/2-Tuesday/M%20McCready-Notre%20Dame-Ionic%20Liquids.pdf*.

W. F. Schneider and E. Mindrup, "First-Principles Evaluation of CO_2 Complexation In Functionalized Ionic Liquids," Symposium on Ionic Liquids: From Knowledge to Application, American Chemical Society National Meeting, Philadelphia, Pennsylvania, August 17-21, 2008.

K. E. Gutowski and E. J. Maginn, "Amine-Functionalized Task Specific Ionic Liquids for CO_2 Capture," Symposium on Ionic Liquids: From Knowledge to Application, American Chemical Society National Meeting, Philadelphia, Pennsylvania, August 17-21, 2008.

Joan F. Brennecke, "CO_2 Capture – Challenges and Opportunities," Energy, Citizens and Economic Transformation for Indiana and America, University of Notre Dame, July 7, 2008.

Joan F. Brennecke, Jessica L. Anderson, Alexandre Chapeaux, Devan E. Kestel, Zulema K. Lopez-Castillo, and Juan C. de la Fuente, "Carbon Dioxide Capture Using Ionic Liquids," 236th ACS National Meeting, Philadelphia, Pennsylvania, August 17, 2008.

E. M. Mindrup and W. F. Schneider, "Comparison of Functionalized Amine Energetics for CO_2 Capture," poster presented at the AIChE Annual Meeting, Philadelphia, Pennsylvania 2008.

Wei Shi and E. J. Maginn, "Molecular simulation of pure and mixture gases absorption in ionic liquids," presented at the AIChE Annual Meeting, Philadelphia, Pennsylvania 2008.

Wei Shi and E. J. Maginn, "Molecular simulation and regulation solution theory modeling of pure and mixed gas absorption in the ionic liquid 1-n-butyl-3- methylimidazolium Bis(Trifluoromethylsulfonyl)amide ([hmim][Tf2N])," Journal of Physical Chemistry B, 112(51), 16710-16720.

Fisher, K.S., et al. Advanced Amine Solvent Formulations and Process Integration for Near-Term CO_2 Capture Success. Final Report to DOE/NETL. Grant No. DE-FG02-06ER84625, June 2007.

Christina Myers, Henry Pennline, David Luebke, Jeffery Ilconich, JaNeille Dixon, Edward J. Maginn, and Joan F. Brennecke, "High Temperature Separation of Carbon Dioxide/Hydrogen Mixtures Using Facilitated Supported Liquid Membranes," Journal of Membrane Science, 2008, 322, 28-31.

Xiaochun Zhang, Feng Huo, Zhiping Liu, Wenchuan Wang, Edward Maginn and Wei Shi, "Absorption of CO_2 in the Ionic Liquid 1-n-hexyl-3-methylimidazolium tris(pentafluoroethyl)trifluorophosphate ([hmim][FEP]): A Molecular View by Computer Simulations," Journal of Physical Chemistry B, 2009, 113, 7591-7598.

Keith Gutowski and Edward J. Maginn, "Amine-Functionalized Task-Specific Ionic Liquids: A Mechanistic Explanation for the Dramatic Increase in Viscosity Upon Complexation with CO_2 from Molecular Simulation," Journal of the American Chemical Society, 2008, 130, 14690-14704.

E. J. Maginn, Developing New Ionic Liquids for CO_2 Capture: A Success Story for Thermodynamics and Computational Molecular Design, GE Global Research Symposium on Emissions and Aftertreatment, GE Global Research Center, Niskayuna, New York, Sept. 17, 2009.

Marcos Perez-Blanco and Edward J. Maginn, "Molecular Dynamics Simulations of CO_2 at an Ionic Liquid Interface: Adsorption, Ordering and Interfacial Crossing," Journal of Physical Chemistry B (cover article), 2010, 36, 11827.

W. F. Schneider, "Ionic Liquids for CO_2 Capture from First-Principles," CECAM workshop on Carbon Capture, Lausanne, Switzerland, July 26-28, 2010.

W. F. Schneider and E. Mindrup, "AHA! Computational design of aprotic heterocyclic anions for ionic-liquid-based CO_2 separations," Division of Fuel Chemistry, American Chemical Society National Meeting, Boston, Massachusetts, August 22-26, 2010.

Burcu E. Gurkan, Juan C. de la Fuente, Elaine M. Mindrup, Lindsay E. Ficke, Brett F. Goodrich, Erica A. Price, William F. Schneider, and Joan F. Brennecke, "Equimolar CO_2 absorption by anion-functionalized ionic liquids," J. Am. Chem. Soc., 132, 2010, 2116-2117.

Burcu E. Gurkan, Juan de la Fuente, Elaine M. Mindrup, Lindsay E. Ficke, Brett F. Goodrich, Erica A. Price, William F. Schneider, Edward J. Maginn and Joan F. Brennecke, "Chemically Complexing Ionic Liquids for Post-Combustion CO_2 Capture," Clearwater Clean Coal Conference, Clearwater, FL, June 6-10, 2010.

Edward J. Maginn, "Molecular engineering of new ionic liquid sorbents for CO_2 capture" at the 9th Annual Carbon Capture and Sequestration Meeting, Pittsburgh, Pennsylvania, May 2010.

Edward J. Maginn, Joan F. Brennecke, William F. Schneider, and Mark J. McCready, "Ionic Liquids: Breakthrough Absorption Technology for Post-combustion CO_2 Capture," presented at the NETL CO_2 Capture Technology Meeting, Pittsburgh, Pennsylvania, September, 2010.

DEVELOPMENT AND EVALUATION OF A NOVEL INTEGRATED VACUUM CARBONATE ABSORPTION PROCESS

primary project goals

The Illinois State Geological Survey (ISGS) set out to prove the novel Integrated Vacuum Carbonate Absorption Process (IVCAP) concept and further improve the energy efficiency of the process for post-combustion carbon dioxide (CO_2) capture.

technical goals

- Test the proof-of-concept of the IVCAP.
- Identify an effective catalyst for accelerating CO_2 absorption.
- Identify an effective additive for reducing the stripping heat.
- Evaluate a modified IVCAP as a multi-pollutant control process for combined sulfur dioxide (SO_2) and CO_2 capture.

technical content

The proposed IVCAP employs a potassium carbonate (K_2CO_3) aqueous solution for CO_2 absorption. While the absorption takes place at atmospheric pressure, the stripper is operated under a vacuum condition. As seen in Figure 1 and Table 1, the low heat of reaction between CO_2 and K_2CO_3 favors a stripping process operated at a low temperature and the low-quality steam (close to the exhaust end of low-pressure turbine in the power plant) can be used as a heat source for the stripping process as a result.

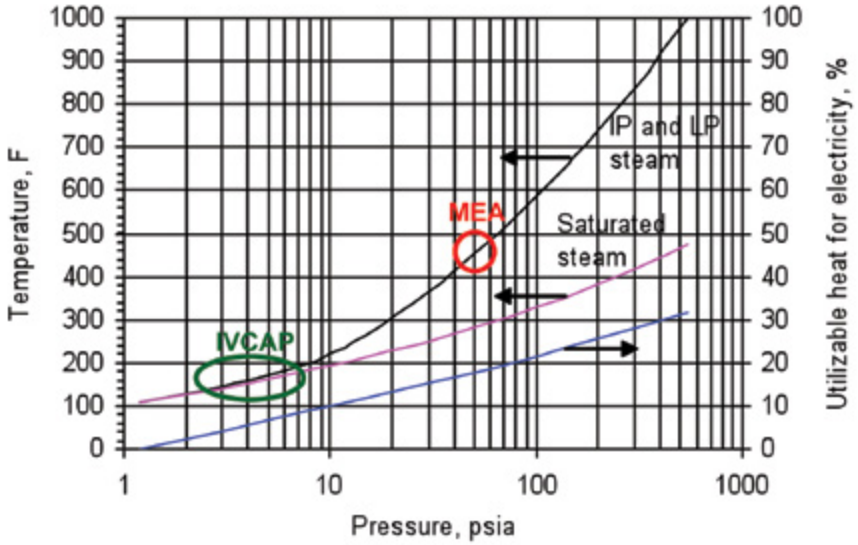

Figure 1: Steam Properties During Expansion in the Intermediate- and Low-Pressure Turbines

technology maturity:

Laboratory-Scale, Simulated Flue Gas

project focus:

Novel Integrated Vacuum Carbonate Process

participant:

Illinois State Geological Survey

project number:

NT0005498

NETL project manager:

Andrew Jones
andrew.jones@netl.doe.gov

principal investigator:

Yongqi Lu
Illinois State Geological Survey
yongqilu@illinois.edu

partners:

Calgon Carbon Corporation
Illinois Clean Coal Institute
University of Illinois

performance period:

10/1/08 – 4/30/12

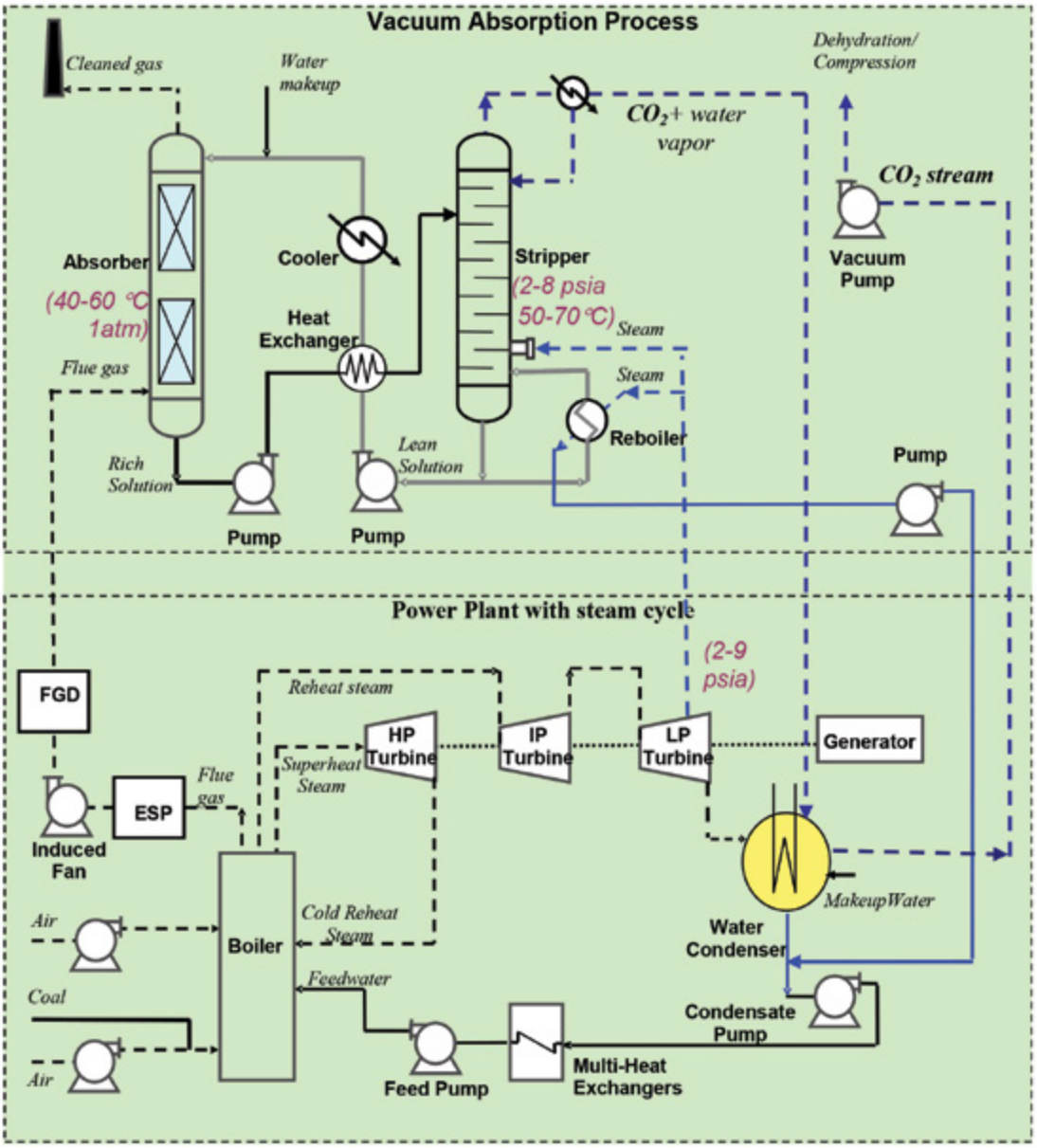

Figure 2: Vacuum Stripping in the IVCAP Allows for Use of Low-Quality Steam From the Power Plant

TABLE 1: A COMPARISON OF HEATS OF ABSORPTION FOR CO_2 SOLVENTS

Solvent	Main Reaction	Heat of Absorption
Primary/Secondary Amines	$2RR'NH + CO_2 = RR'NCOO^- + RR'NH_2+$	MEA: 1,900 kJ/kg
Tertiary Amine	$RR'R''N + CO_2 + H_2O = HCO_3^- + RR'R''NH^+$	MDEA: 1,200 kJ/kg
Carbonate	$CO_32- + CO_2 + H_2O = 2\ HCO_3^-$	600 kJ/kg

The intrinsic rate of CO_2 absorption into the K_2CO_3 solution is much slower than that in a monoethanolamine (MEA) solution; therefore, enzyme catalysts were developed to promote the absorption rate. Unlike the mixing of another solvent into a primary solvent, a catalyst accelerates the absorption rate without increasing the heat of absorption of the solvent.

The enzyme catalysts will need to be immobilized in order to:

- Reduce enzyme leakage in a flow system.
- Improve chemical stability of enzymes.
- Improve thermal stability of enzymes.

Three supportive matrices (i.e., carbon-, controlled pore glass [CPG]-, and silica-based materials) were evaluated for enzyme immobilization.

Since more than 60 to 70 percent of the process heat in the IVCAP is the stripping heat, an additive able to suppress water vaporization of the CO_2-loaded solution can reduce the stripping heat in the stripper. Successful screening and development of an additive can further reduce the heat use in the IVCAP.

The IVCAP has the flexibility to integrate SO_2 removal in the CO_2 capture process. In the amine-based and amine-promoted absorption processes, the flue gas must be treated to reduce the concentration of SO_2 and other acid gases to below 20 parts per million (ppm) to prevent/minimize the formation of heat-stable salts that are difficult to reclaim. In the IVCAP, SO_2 can be removed by the reaction with the solvent to form a sulfate salt that can be further processed to reclaim the solvent.

TABLE 2: PROCESS PARAMETERS FOR IVCAP PROCESS

	Units	Current R&D Value	Target R&D Value
Pure Solvent			
Molecular Weight	mol^{-1}	138	N/A
Normal Boiling Point	°C	103	N/A
Normal Freezing Point	°C	≤0	N/A
Vapor Pressure @ 15°C	bar	Not volatile	N/A
Manufacturing Cost for Solvent	$/kg	0.4-1.0	≤0.8
Working Solution			
Concentration	kg/kg	0.2	0.2
Specific Gravity (15°C/15°C)	-	1.24	N/A
Specific Heat Capacity @ STP	kJ/kg-K	3.34	N/A
Viscosity @ STP	cP	1.9	N/A
Absorption (Rich Solution at Bottom)			
Pressure	bar	0.06-0.08 (0.8-1.2 psia)	<0.1
Temperature	°C	40-60	40-60
Equilibrium CO_2 Loading	mol/mol	0.5	0.5
Heat of Absorption	kJ/mol CO_2	600	N/A
Solution Viscosity	cP	0.95 (at 50°C)	N/A
Desorption (Lean Solution at Bottom)			
Pressure (CO_2 equilibrium pressure)	bar	0.007-0.02 (0.1-0.3 psia)	≥0.01
Temperature	°C	50-70	50-70
Equilibrium CO_2 Loading	mol/mol	0.12-0.20	≤0.2
Heat of Desorption	kJ/mol CO_2	600	N/A
Proposed Module Design		*(for equipment developers)*	
Flue Gas Flowrate	kg/hr	500,000 (100,000 kg/hr CO_2)	
CO_2 Recovery, Purity, and Pressure	% / % / bar	90%, 99%, 0.14–0.54 (prior to vacuum pump)	
Adsorber Pressure Drop	bar	0.04 (structured packing)	
Estimated Absorber/Stripper Cost of Manufacturing and Installation	$ / kg/hr	N/A	

Definitions:

STP – Standard Temperature and Pressure (15°C, 1 atm).

Pure Solvent – Chemical agent(s), working alone or as a component of a working solution, responsible for enhanced CO_2 absorption (e.g., the amine MEA in an aqueous solution).

Manufacturing Cost for Solvent – "Current" is market price of chemical, if applicable; "Target" is estimated manufacturing cost for new solvents, or the estimated cost of bulk manufacturing for existing solvents.

Working Solution – The solute-free (i.e., CO_2-free) liquid solution used as the working solvent in the absorption/desorption process (e.g., the liquid mixture of MEA and water).

Absorption – The conditions of interest for absorption are those that prevail at maximum solvent loading, which typically occurs at the bottom of the absorption column. These may be assumed to be 1 atm total flue-gas pressure (corresponding to a CO_2 partial pressure of 0.13 bar) and 40°C; however, measured data at other conditions are preferable to estimated data.

Desorption – The conditions of interest for desorption are those that prevail at minimum solvent loading, which typically occurs at the bottom of the desorption column. Operating pressure and temperature for the desorber/stripper are process-dependent (e.g., an MEA-based absorption system has a typical CO_2 partial pressure of 1.8 bar and a reboiler temperature of 120°C). Measured data at other conditions are preferable to estimated data.

Pressure – The pressure of CO_2 in equilibrium with the solution. If the vapor phase is pure CO_2, this is the total pressure; if it is a mixture of gases, this is the partial pressure of CO_2. Note that for a typical pulverized coal (PC) power plant, the total pressure of the flue gas is about 1 atm and the concentration of CO_2 is about 13.2 percent. Therefore, the partial pressure of CO_2 is roughly 0.132 atm or 0.130 bar.

Concentration – Mass fraction of pure solvent in working solution.

Loading – The basis for CO_2 loadings is moles of pure solvent.

Estimated Cost – Basis is kg/hr of CO_2 in CO_2-rich product gas; assuming targets are met.

Other Parameter Descriptions:

Chemical/Physical Solvent Mechanism – The main reactions involving in the IVCAP include:

CO_2 absorption: $CO_2+H_2O^+K_2CO_3 = 2KHCO_3$
Solvent regeneration: $2KHCO_3=K_2CO_3+H_2O^+CO_2$

Solvent Contaminant Resistance – Since the potassium carbonate solution is used as a solvent, no solvent degradation and little corrosion problems are expected. The $K_2CO_3/KHCO_3$ solution reacts with the flue gas contaminants (e.g., SO_2, nitrogen oxides [NO_x], hydrogen chloride [HCl], etc.). No SO_2 scrubbing pretreatment is needed prior to the IVCAP, since SO_2 removal can be combined with CO_2 capture and the potassium sulfate desulfurization product can be potentially reclaimed in the IVCAP.

Solvent Foaming Tendency – The $K_2CO_3/KHCO_3$ solution itself does not have a foaming problem. The addition of a carbonic anhydrase (CA) enzyme biocatalyst in the $K_2CO_3/KHCO_3$ solution will not incur a foaming tendency due to its low dosage (<3 g/l) and low contents of impurities.

Flue Gas Pretreatment Requirements – Sulfur dioxide removal can be combined with CO_2 capture in the IVCAP. The carbonate solution absorbs SO_2 to form a sulfate salt, which is reclaimable using a reclamation approach developed in this project. Therefore, a separate flue gas desulfurization (FGD) unit currently required in the power plant can be potentially downsized or even eliminated in the IVCAP. No other flue gas pretreatments (such as for particulate matter [PM], NO_x) are required either.

Solvent Make-Up Requirements – A thermophilic CA enzyme tested in the project demonstrated to be stable at 40°C. At 50°C, the enzyme had a half-life of approximately two months. After immobilization, the thermal stability of the enzyme has been significantly improved. The enzyme also demonstrated excellent chemical stability against the most abundant flue gas impurities. It is estimated that two to three replacements of the enzyme is required annually if the absorption operates at 50°C and 30 percent replacements is required at 40°C.

Waste Streams Generated – Waste streams mainly include the process blowdown streams, such as the carbonate/bicarbonate aqueous solution from the absorber/stripper and water condensate saturated with CO_2.

Proposed Module Design – Unless noted, flue gas feed pressure is 1.014 bara, temperature is 57°C, and composition leaving the flue gas desulfurization (FGD) unit (wet basis) should be assumed:

Composition (% vol)					Composition (ppmv)	
CO_2	H_2O	N_2	O_2	Ar	SO_x	NO_x
13.17	17.25	66.44	2.34	0.8	42	74

technology advantages

- Uses lower-quality steam than amine-based processes (e.g., MEA), consequently increasing net power output.
- Lower heat of absorption.
- Less energy required for CO_2 stripping.
- Modified IVCAP may be able to remove SO_2 without an FGD unit.
- Approximately 25 percent lower electricity loss.

R&D challenges

- Slow kinetics of CO_2 absorption into the K_2CO_3 solution; thus, a high-activity catalyst is required.
- Potentially large capital and operating cost of the vacuum pump and vacuum stripper.
- Suppressing water vaporization in the stripper.
- Chemical and thermal stability of the absorption enzymes.

results to date/accomplishments

- Reactivity tests of two CA enzymes (ACA1 and ACA2) from a leading enzyme manufacturer and eight inorganic and organic catalysts commercially available were evaluated in a laboratory-stirred tank reactor (STR). The CA enzymes were identified to be the most-effective catalyst for promoting CO_2 absorption into $K_2CO_3/KHCO_3$ solution.
- Rates of CO_2 absorption into a 20 wt% $K_2CO_3/KHCO_3$ solution were increased by approximately three to nine times at temperatures between 25 and 50°C with the addition of 300 mg/l CA enzyme. Further increase in absorption rate was observed at higher CA concentrations (>300 mg/l CA). Absorption rates into CO_2-rich $K_2CO_3/KHCO_3$ solutions were comparable to those into CO_2-lean $K_2CO_3/KHCO_3$ solutions at the same CA dosage. Modeling predictions suggested that in a packed-bed column configuration, the IVCAP absorber at 2 g/l CA dosage was 23 to 40 percent larger than the equivalent equipment for the MEA process employing 5M MEA as a solvent.
- The CA enzymes demonstrated excellent chemical stability to resist flue gas impurities. Presence of flue gas impurities at their typical concentrations resulted in <11 percent loss of initial CA activity.
- The ACA1 enzyme had satisfactory stability at 25°C, but not at temperatures higher than 40°C. The ACA2 enzyme (a thermophilic CA) demonstrated excellent thermal stability at 40°C, losing only about 15 percent of its initial activity after six months. At 50°C, the ACA2 enzyme had a half-life of about two months.
- Covalent bonding methods were successfully developed to immobilize the CA enzymes onto different carbon-, CPG-, and silica-based support materials. All of the immobilized CA enzymes exhibited significantly improved thermal stability.
- Process simulation studies showed that the IVCAP integrated with a 528 MWe (gross) coal-fired, subcritical power plant at a baseline condition lowered parasitic power losses by 24 percent compared to the conventional MEA process.

- Techno-economic studies showed that the capital cost of the baseline IVCAP was about 33 percent higher than that for the MEA process due to the requirements for a vacuum pump and a larger stripper under a vacuum condition, but its operation and maintenance (O&M) cost was about 40 percent lower due to its lower solvent cost and reduced parasitic power losses. The levelized cost of electricity (LCOE, about $46/MWh) of the baseline IVCAP was a 71 percent increase over the reference power plant without CO_2 capture, about 17 percent less than that of the MEA process.

next steps

This project ended on April 30, 2012.

available reports/technical papers/presentations

Zhang, S., et. al, "Catalytic Behavior of Carbonic Anhydrase Enzyme Immobilized onto Nonporous Silica Nanoparticles for Enhancing CO_2 Absorption into a Carbonate Solution," Int. J. Greenhouse Gas Control 2013, 13: 17-25.

Lu, Y., et. al, "Development and Evaluation of a Novel Integrated Vacuum Carbonate Absorption Process," Final Project Closeout Review, Pittsburgh, Pennsylvania, July 13, 2012. *http://www.netl.doe.gov/File%20Library/Research/Coal/ewr/co2/IVCAP-Closeout-Mtg-0713.pdf*.

Lu, Y., et al, "An Integrated Vacuum Carbonate Absorption Process Enabled with an Enzyme Biocatalyst for CO_2 Absorption," proceedings of the Clearwater Clean Coal Conference, Tampa, Florida, June 2012. *http://www.netl.doe.gov/File%20Library/Research/Coal/ewr/co2/Clearwater-IVCAP-YLu.pdf*.

Zhang S., et. al, "Activity and Stability of Immobilized Carbonic Anhydrase for Promoting CO_2 Absorption into A Carbonate Solution for Post-Combustion CO_2 Capture," Bioresources Technology 2011, 102(22): 10194-10201.

Lu, Y., et. al, "Development of a Carbonate Absorption-Based Process for Post-Combustion CO_2 Capture: The Role of Biocatalyst to Promote CO_2 Absorption Rate," Energy Procedia 2011, 4: 1286-1293.

Lu, Y., et. al, "Development and Evaluation of a Novel Integrated Vacuum Carbonate Absorption Process," presented at the 2011 NETL CO_2 Capture Technology Meeting, Pittsburgh, Pennsylvania, August 2011.

Lu, Y., et.al, "Development and Evaluation of a Novel Integrated Vacuum Carbonate Absorption Process," presented at the 2010 NETL CO_2 Capture Technology Meeting, Pittsburgh, Pennsylvania, September 2010.

Lu, Y., "Development and Evaluation of a Novel Integrated Vacuum Carbonate Absorption Process," presented at the Annual NETL CO_2 Capture Technology for Existing Plants R&D Meeting, Pittsburgh, Pennsylvania, March 2009.

SLIPSTREAM DEVELOPMENT AND TESTING OF SIEMENS POSTCAP CAPTURE AND SEPARATION TECHNOLOGY

primary project goals

Siemens Energy set out to design, install, and operate a pilot plant to treat a 2.5-megawatt (MW) flue gas slipstream from an operating coal-fired power plant to demonstrate the aqueous amino acid salt (AAS) solvent-based, post-combustion carbon dioxide (CO_2) gas capture technology.

technical goals

- Demonstrate the ability of Siemens Energy's POSTCAP technology to achieve 90 percent CO_2 removal while approaching a 35 percent increase in the cost of electricity (COE).
- Demonstrate the scalability and feasibility of developing the technology to a full-scale, commercial, post-combustion CO_2 capture (550 MW) application for coal-fired power plants and to full-scale commercial application for industrial sources of CO_2 emissions.

technical content

Siemens Energy worked to design, install, and operate an advanced CO_2 capture, solvent-based pilot plant. The Siemens POSTCAP CO_2 capture process utilizes an aqueous AAS solution as the solvent that offers cost and performance advantages when compared to state-of-the-art, amine-based solvents. The POSTCAP pilot plant was to be installed at Tampa Electric Company's (TECO) Big Bend Station and treat a flue gas slipstream equivalent to approximately 2.5 megawatt electric (MWe). Although the CO_2 source for this slipstream pilot-scale testing is from a coal-fired power plant flue gas, it would have provided an appropriate design and performance baseline for direct scale-up to many industrial applications.

The project encompassed the complete design, engineering, procurement, installation, operation, data analysis, and decommissioning of the CO_2 capture system and was to be completed in four phases. In Phase I, the engineering design and permitting for the project were completed. POSTCAP system mass and energy balances and pilot plant process flow diagrams were to be generated, and the host site was to be analyzed for integration of the pilot plant. Phase II was to encompass the equipment procurement, fabrication, delivery, and installation of the components at the host site with required tie-ins to plant interfaces. In Phase III, the pilot plant was to be commissioned and started up, the pilot program test campaigns were to be conducted, and the resulting data were to be analyzed. Phase IV was to cover the pilot plant decommissioning and disassembly.

technology maturity:

Pilot-Scale, Actual Flue Gas Slipstream

project focus:

POSTCAP Capture and Separation

participant:

Siemens Energy

project number:

FE0003714

NETL project manager:

David Lang
david.lang@netl.doe.gov

principal investigator:

John Winkler
Siemens Energy, Inc.
john.winkler@siemens.com

partners:

Siemens AG

performance period:

10/1/10 – 2/29/12

Figure 1: Siemens Lab Plant for CO_2 Capture Tests at Frankfurt Hoechst Industrial Park

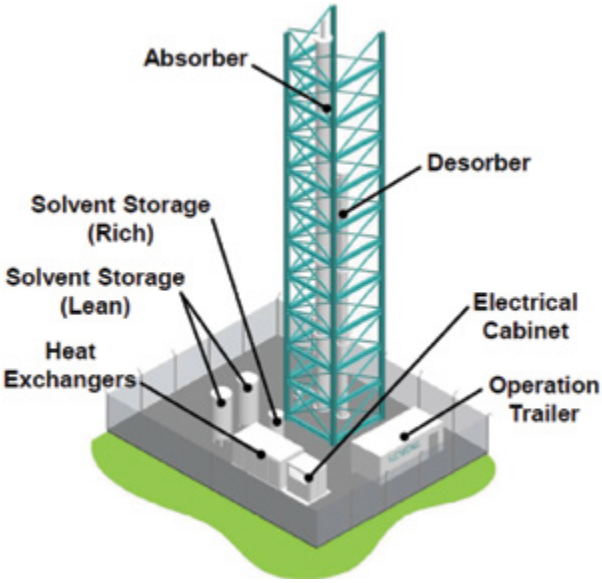

Figure 2: Basic POSTCAP Pilot Layout

technology advantages

- Lower energy consumption.
- Negligible solvent emission and degradation.
- High absorption capacity.
- Low environmental impact.

R&D challenges

- Developing solvent suppliers on a large, commercial scale.
- Minimize energy consumption.
- Available footprint for large-scale carbon capture retrofits.
- Combined cycle challenges to be overcome:
  - Low CO_2 concentration in flue gas.
  - High oxygen content in flue gas.
  - Operation with frequent load changes.
  - Fewer integration options for low-temperature heat from the capture plant.

results to date/accomplishments

Completed a preliminary design for a 2.5-MW POSTCAP pilot plant that was to be installed at the TECO Big Bend Power Station.

next steps

This project ended on February 29, 2012.

available reports/technical papers/presentations

Winkler, J.L., "Slipstream Development & Testing of Post Combustion CO_2 Capture and Separation Technology for Existing Coal-Fired Plants," presented at 2011 NETL CO_2 Capture Technology Meeting, Pittsburgh, Pennsylvania, August 2011. *http://www.netl.doe.gov/publications/proceedings/11/co2capture/presentations/2-Tuesday/23Aug11-Winkler-Siemens-Technology%20Slipstream%20Testing.pdf*.

REVERSIBLE IONIC LIQUIDS AS DOUBLE-ACTION SOLVENTS FOR EFFICIENT CO_2 CAPTURE

technology maturity:
Laboratory-Scale, Simulated Flue Gas

project focus:
Reversible Ionic Liquids

participant:
Georgia Tech Research Corporation

project number:
NT0005287

NETL project manager:
David Lang
david.lang@netl.doe.gov

principal investigator:
Charles A. Eckert
Georgia Tech Research Corporation
charles.eckert@chbe.gatech.edu

partners:
N/A

performance period:
10/1/08 – 9/30/11

primary project goals

The primary project goal was to develop a novel class of solvents for the recovery of carbon dioxide (CO_2) from post-combustion flue gases that would achieve a substantial increase in CO_2 working capacity with a reduction in cost.

technical goals

- Synthesis of silyl amine-based ionic liquids (ILs) with minimal viscosity.
- Measure heat of absorption and desorption.
- Measure rates of CO_2 absorption and desorption.
- Identify solvents that will consume the minimal amount of energy.
- Use simulation tools, such as ASPEN, to design an economic absorption/desorption process.

technical content

Reversible ionic liquids (RevILs) are neutral molecules that react with CO_2 to form an IL, which then dissolves additional CO_2 by a physisorption mechanism. Subsequently, modest elevations in temperature reverse the reaction and yield pure CO_2 for disposal; because of this dual mode, capacity can be large.

In a two-component RevIL, CO_2 at 1 atmosphere acts as a "switch," as shown in Figure 1.

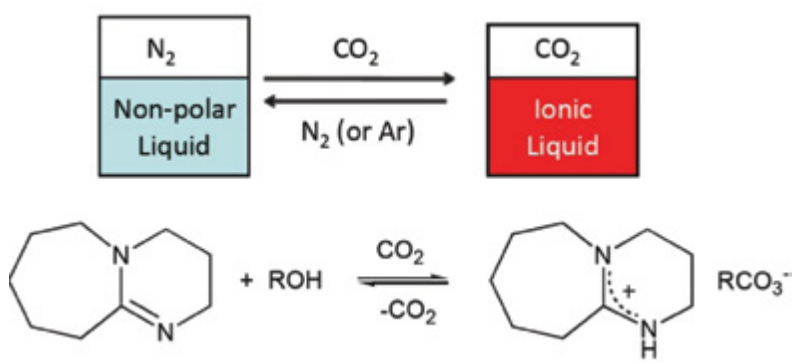

Figure 1: CO_2 Will Switch a Non-Polar Liquid to an Ionic Liquid

Two-component RevILs have the disadvantage of being too complex and requiring alcohol. Light alcohol would evaporate with the CO_2, while a heavy alcohol would have too much heat capacity. A single-component RevIL would eliminate the need for alcohol.

Figure 2 shows an example based on silylated amine. The chemistry must work well in the presence of water, considering that water is a component of flue gas. The RevILs will be tested for their chemical stability with 0 and 10 % water present. Stability will also be tested

at 4, 25, and 50°C. High viscosity could also be an issue; however, viscosity in RevILs is highly nonlinear (as shown in Figure 3) and can be reduced with impurities, such as water or dissolved gases.

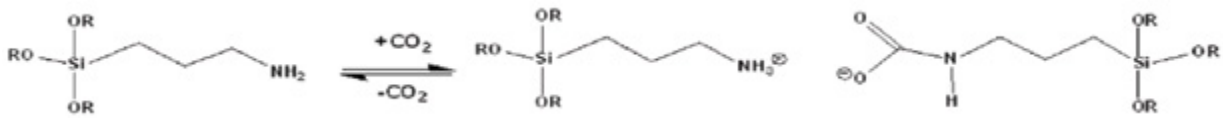

Figure 2: An Example of a Single-Component RevIL

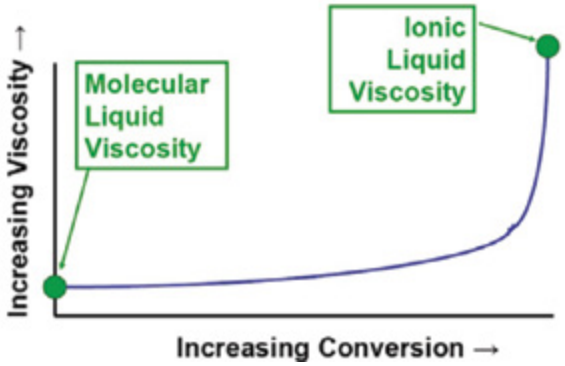

Figure 3: Ionic Liquids are More Viscous Than Their Respective Molecular Liquids

TABLE 1: PROCESS PARAMETERS FOR REVIL SOLVENTS

	Units	Current R&D Value	Target R&D Value
Pure Solvent			
Molecular Weight	mol^{-1}	170-220	150
Normal Boiling Point	°C	150 or greater	200
Normal Freezing Point	°C	< -77	
Vapor Pressure @ 15°C	bar	0.5-1x10-3	
Manufacturing Cost for Solvent	$/kg	TBD	
Working Solution			
Concentration	kg/kg	0.95	
Specific Gravity (15°C/15°C)	-	≈0.82	
Specific Heat Capacity @ STP	kJ/kg-K	2.2	<4.2
Viscosity @ STP	cP	>1,000	<80
Absorption			
Pressure	bar	1.2	1.2
Temperature	°C	25-40	>50
Equilibrium CO_2 Loading	mol/mol	Avg. 0.63	
Heat of Absorption	kJ/mol CO_2	80-90	
Solution Viscosity	cP	Variable (often <1,000)	<1,000
Desorption			
Pressure	bar	2	2
Temperature	°C	115	75
Equilibrium CO_2 Loading	mol/mol	< 0.01	
Heat of Desorption	kJ/mol CO_2	≈120	

TABLE 1: PROCESS PARAMETERS FOR REVIL SOLVENTS

	Units	Current R&D Value	Target R&D Value
Proposed Module Design		*(for equipment developers)*	
Flue Gas Flowrate	kg/hr		
CO_2 Recovery, Purity, and Pressure	% / % / bar		
Adsorber Pressure Drop	bar		
Estimated Absorber/Stripper Cost of Manufacturing and Installation	$\frac{\$}{kg/hr}$		

Definitions:

STP – Standard Temperature and Pressure (15°C, 1 atm).

Pure Solvent – Chemical agent(s), working alone or as a component of a working solution, responsible for enhanced CO_2 absorption (e.g., the amine monoethanolamine [MEA] in an aqueous solution).

Manufacturing Cost for Solvent – "Current" is market price of chemical, if applicable; "Target" is estimated manufacturing cost for new solvents, or the estimated cost of bulk manufacturing for existing solvents.

Working Solution – The solute-free (i.e., CO_2-free) liquid solution used as the working solvent in the absorption/desorption process (e.g., the liquid mixture of MEA and water).

Absorption – The conditions of interest for absorption are those that prevail at maximum solvent loading, which typically occurs at the bottom of the absorption column. These may be assumed to be 1 atm total flue-gas pressure (corresponding to a CO_2 partial pressure of 0.13 bar) and 40°C; however, measured data at other conditions are preferable to estimated data.

Desorption – The conditions of interest for desorption are those that prevail at minimum solvent loading, which typically occurs at the bottom of the desorption column. Operating pressure and temperature for the desorber/stripper are process-dependent (e.g., an MEA-based absorption system has a typical CO_2 partial pressure of 1.8 bar and a reboiler temperature of 120°C). Measured data at other conditions are preferable to estimated data.

Pressure – The pressure of CO_2 in equilibrium with the solution. If the vapor phase is pure CO_2, this is the total pressure; if it is a mixture of gases, this is the partial pressure of CO_2. Note that for a typical pulverized coal (PC) power plant, the total pressure of the flue gas is about 1 atm and the concentration of CO_2 is about 13.2 percent. Therefore, the partial pressure of CO_2 is roughly 0.132 atm or 0.130 bar.

Concentration – Mass fraction of pure solvent in working solution.

Loading – The basis for CO_2 loadings is moles of pure solvent.

Estimated Cost – Basis is kg/hr of CO_2 in CO_2-rich product gas; assuming targets are met.

Other Parameter Descriptions:

Chemical/Physical Solvent Mechanism – Chemical reaction for the CO_2 capture process is shown in Figure 2.

Solvent Contaminant Resistance – Since amine groups are involved in the reaction, sulfur oxides (SO_x) and nitrogen oxides (NO_x), as well as other acid gases, have to be removed. However, solvents have been shown to be stable in wet and oxygen-rich environments for a period of two months.

Solvent Foaming Tendency – No foaming observed.

Flue Gas Pretreatment Requirements – Flue gas pretreatment should be similar to the amine-based absorption processes since the RevIL is resistant to moisture.

Solvent Make-Up Requirements – Only required for process leakage in large plant.

Waste Streams Generated – None anticipated.

Proposed Module Design – Unless noted, flue gas feed pressure is 1.014 bara, temperature is 57°C, and composition leaving the flue gas desulfurization (FGD) unit (wet basis) should be assumed:

Composition (% vol)					Composition (ppmv)	
CO_2	H_2O	N_2	O_2	Ar	SO_x	NO_x
13.17	17.25	66.44	2.34	0.8	42	74

technology advantages

- Use both physical absorption (dissolution in RevILs) and chemical absorption (reaction with RevILs); amines utilize only chemical absorption.
- Structure can be modified to optimize properties.
- Silylation will decrease viscosity.
- Function in the presence of water.
- Greater capacity than current solvents.
- Smaller energy penalty than current solvents.

R&D challenges

- New compounds must be designed, synthesized, and characterized.
- Optimum equilibria and heats must be achieved.
- Rapid reaction rates must be achieved.
- Favorable transport rates must be achieved.
- Results from new process must meet U.S. Department of Energy goals.

results to date/accomplishments

- Have demonstrated greater capacity than current solvents.
- Successful synthesis and chemical characterization of 10 precursors for novel RevILs:
  - (3-aminopropyl) trimethoxysilane.
  - (3-aminopropyl) triethoxysilane.
  - (3-aminopropyl) triethylsilane.
  - (3-aminopropyl) tripropylsilane.
  - (3-aminopropyl) trihexylsilane.
  - (3-aminopropyl) diisopropyl silane.
  - (3-aminopropyl) cyclohexyldimethyl silane.
  - (3-aminopropyl) phenyldimethyl silane.
  - (E)-3-(triethylsilyl) prop-2-en-1-amine.
  - 4-(triethylsilyl) butan-2-amine.
- Completed examination of the chemical and physical absorption of CO_2 in the six silyl-amine-based RevILs at operating pressures of up to 1,000 pounds per square inch (psi) and temperatures of 35, 50, 75, and 100°C.
- Established recyclability of silyl-amine-based reversible ILs.

next steps

This project ended on September 30, 2011.

available reports/technical papers/presentations

Rohan, A. L., et.al, "The Synthesis and the Chemical and Physical Properties of Non-Aqueous Silylamine Solvents for Carbon Dioxide Capture," Chemsuschem 2012, 5 (11), 2181-2187.

Eckert, C. A., and Liotta, C. L., "Reversible Ionic Liquids as Double-Action Solvents for Efficient CO_2 Capture," Final Report, December 2011. *http://www.osti.gov/bridge/servlets/purl/1048880/1048880.pdf*.

Eckert, C. A., and Liotta, C. L., "Reversible Ionic Liquids as Double-Action Solvents for Efficient CO_2 Capture," presented at 2010 NETL CO_2 Capture Technology Meeting, Pittsburgh, Pennsylvania, September 2010. *http://www.netl.doe.gov/publications/proceedings/10/co2capture/presentations/monday/Charles%20Eckert-NT0005287.pdf*.

Blasucci, V., et.al, "Single Component, Reversible Ionic Liquids for Energy Applications," Fuel, 89, 1315–1319, 2010.

Blasucci, V., et.al, "Reversible Ionic Liquids Designed for Facile Separations," Fluid Phase Equilibria, 294, 1-6, 2010.

Hart, R., et.al, "Benign Coupling of Reactions and Separations with Reversible Ionic Liquids," Tetrahedron, 66, 1082-1090, 2010.

Eckert, C. A., and Liotta, C. L., "Reversible Ionic Liquids as Double-Action Solvents for Efficient CO_2 Capture," presented at the Annual NETL CO_2 Capture Technology for Existing Plants R&D Meeting, Pittsburgh, Pennsylvania, March 2009. *http://www.netl.doe.gov/publications/proceedings/09/CO2/pdfs/5287%20Georgia%20Tech%20reversible%20IL%20solvent%20%28Eckert%29%20mar09.pdf*.

Blasucci, V., et.al, "One Component, Switchable, Neutral to Ionic Liquid Solvents Derived from Siloxylated Amines," Chem Comm, 116-119, 2009.

CO_2 CAPTURE FROM FLUE GAS BY PHASE TRANSITIONAL ABSORPTION

primary project goals

Hampton University set out to conduct the kinetic study for its novel technology, phase transitional absorption, which has the potential to reduce operation costs by at least half (possibly by 80%) and significantly cut capital investment (compared with current monoethanolamine [MEA]-carbon dioxide [CO_2] absorption technologies).

technical goals

To understand the mechanisms of phase transitional absorption by measuring absorption kinetics, regeneration rate, and loading capacity, as well as to further compare with other methods, such as the state-of-art MEA absorption.

technical content

The phase transitional absorption process is radically different from the conventional absorption processes. It uses an activated agent, which, when mixed with a special solvent, forms a special phase transitional absorbent for CO_2 capture. The absorbent, after absorbing CO_2 from flue gas in an absorber, flows into a settler where it is separated into two phases: a CO_2-rich phase and a CO_2-lean phase. The CO_2-rich solvent is then sent to a regenerator for regeneration. After regeneration, the solvent is cooled and mixed with the CO_2-lean phase and sent to an absorber to complete the cycle.

A schematic diagram of the process is shown in Figure 1. It may be noted that the process is similar to a conventional MEA process, except that a settler is added for separating the two phases.

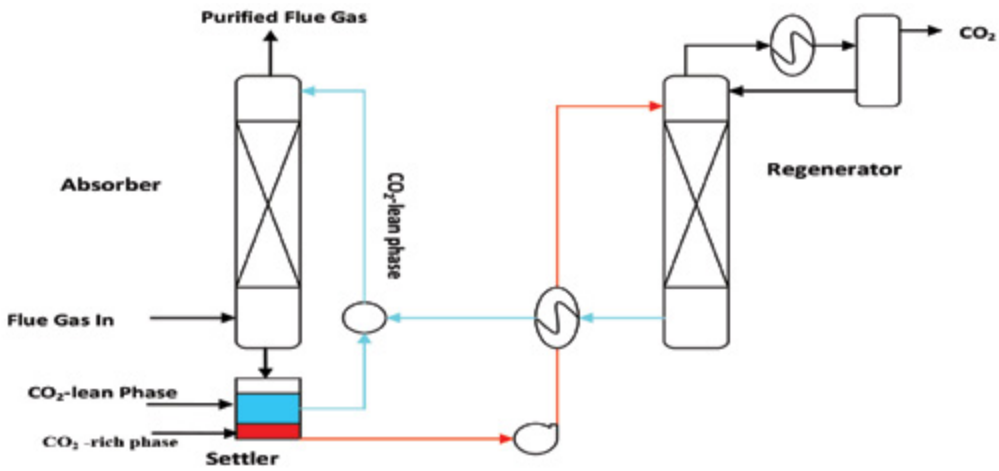

Figure 1: Concept Flow Diagram of Phase Transitional Absorption

In the conventional absorption process, such as an MEA process, the entire solvent is sent to the regenerator for regeneration, which necessitates a large circulation pump and a large amount of regeneration energy. In contrast, in the phase transitional absorption process, the

technology maturity:
Laboratory-Scale, Using Simulated Flue Gas

project focus:
Phase Transitional Absorption

participant:
Hampton University

project number:
FG26-05NT42488

NETL project manager:
Isaac Aurelio
isaac.aurelio@netl.doe.gov

principal investigator:
Liang Hu
Hampton University
lianghu59@yahoo.com

partners:
None

performance period:
6/15/05 – 6/30/09

absorbent separates into two phases, and only the CO_2-rich phase needs to be regenerated. The CO_2-rich phase is only approximately 20 percent of the total absorbent. Thus, the pumping and heating requirements are significantly less compared to the MEA process.

Another important feature of the phase transitional absorption is that the absorption rate of CO_2 will be enhanced by selecting the proper solvent, as shown in Figure 2.

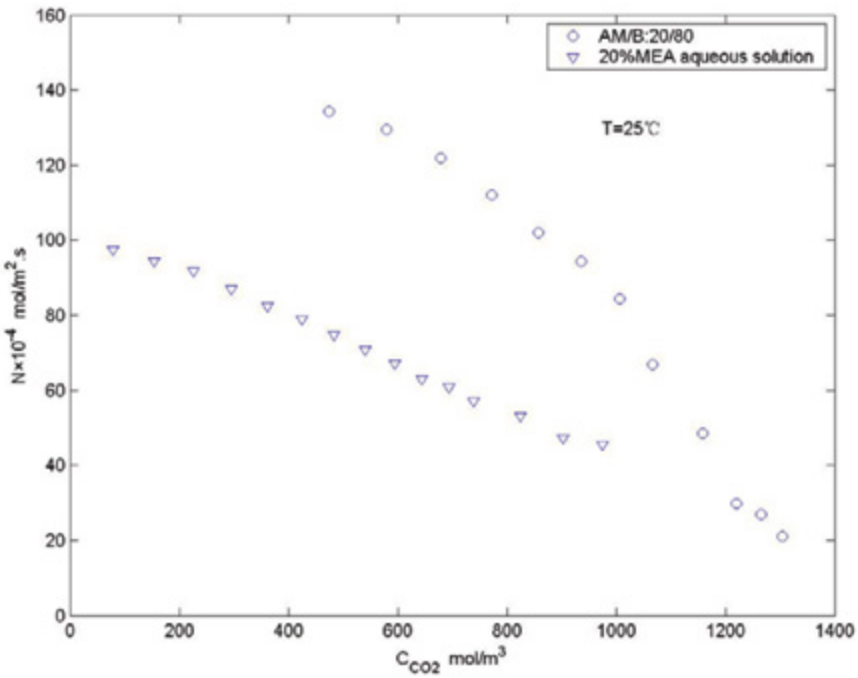

Figure 2: Absorption Rate Comparison (Phase Transitional Absorption vs. MEA Technology)

T = 25°C; P_{CO2} = 1 atm; N=60 rpm; VL = 900 ml.
Phase Transitional Absorption: activated agent: AM 20 percent by volume; solvent: B 80 percent.
MEA Technology: 20 percent (by volume) MEA aqueous solution.

Experimental results also showed that the temperature did not have strong impact on the absorption rate for the several absorbents studied. The small effect on the absorption rate by temperature could be attributed to the much smaller reaction heat.

The highest absorption rate is found when the activated agent was in the range of 30 to 40 percent by volume. The range may vary if the different activated agents and solvents are used. The range of activated agents with the highest absorption rate is highly related to the physical and chemical properties of the absorbent (i.e., activated agents and solvents), as well as the combination.

It was determined from these results that the mechanism of the absorption is a fast chemical reaction controlled by the liquid-side mass transfer. Therefore, an absorber with large gas-liquid interface and sufficient liquid turbulence is recommended in order to have a higher absorption rate, such as a packed column.

TABLE 1: PARAMETERS FOR PHASE TRANSITIONAL ABSORPTION PROCESSES

	Units	Current R&D Value	Target R&D Value
Pure Solvent			
Molecular Weight	mol^{-1}	varies	
Normal Boiling Point	°C	varies	
Normal Freezing Point	°C	N/A	
Vapor Pressure @ 15°C	bar	N/A	
Manufacturing Cost for Solvent	$/kg	N/A	

TABLE 1: PARAMETERS FOR PHASE TRANSITIONAL ABSORPTION PROCESSES

	Units	Current R&D Value	Target R&D Value
Working Solution			
Concentration	kg/kg	20/80 by volume	
Specific Gravity (15°C/15°C)	-	N/A	
Specific Heat Capacity @ STP	kJ/kg-K	N/A	
Viscosity @ STP	cP	N/A	
Absorption			
Pressure	bar	1	
Temperature	°C	25-50	
Equilibrium CO_2 Loading	mol/mol	0.4 – 0.5	
Heat of Absorption	kJ/mol CO_2	N/A	
Solution Viscosity	cP	N/A	
Desorption			
Pressure	bar	1	
Temperature	°C	90-120	
Equilibrium CO_2 Loading	mol/mol	≈ 0	
Heat of Desorption	kJ/mol CO_2	N/A	
Proposed Module Design		*(for equipment developers)*	
Flue Gas Flowrate	kg/hr	N/A	
CO_2 Recovery, Purity, and Pressure	% / % / bar	N/A	
Adsorber Pressure Drop	bar	N/A	
Estimated Absorber/Stripper Cost of Manufacturing and Installation	$\frac{\$}{kg/hr}$	N/A	

Definitions:

STP – Standard Temperature and Pressure (15°C, 1 atm).

Pure Solvent – Chemical agent(s), working alone or as a component of a working solution, responsible for enhanced CO_2 absorption (e.g., the amine MEA in an aqueous solution).

Manufacturing Cost for Solvent – "Current" is market price of chemical, if applicable; "Target" is estimated manufacturing cost for new solvents, or the estimated cost of bulk manufacturing for existing solvents.

Working Solution – The solute-free (i.e., CO_2-free) liquid solution used as the working solvent in the absorption/desorption process (e.g., the liquid mixture of MEA and water).

Absorption – The conditions of interest for absorption are those that prevail at maximum solvent loading, which typically occurs at the bottom of the absorption column. These may be assumed to be 1 atm total flue-gas pressure (corresponding to a CO_2 partial pressure of 0.13 bar) and 40°C; however, measured data at other conditions are preferable to estimated data.

Desorption – The conditions of interest for desorption are those that prevail at minimum solvent loading, which typically occurs at the bottom of the desorption column. Operating pressure and temperature for the desorber/stripper are process-dependent (e.g., an MEA-based absorption system has a typical CO_2 partial pressure of 1.8 bar and a reboiler temperature of 120°C). Measured data at other conditions are preferable to estimated data.

Pressure – The pressure of CO_2 in equilibrium with the solution. If the vapor phase is pure CO_2, this is the total pressure; if it is a mixture of gases, this is the partial pressure of CO_2. Note that for a typical PC power plant, the total pressure of the flue gas is about 1 atm and the concentration of CO_2 is about 13.2 percent. Therefore, the partial pressure of CO_2 is roughly 0.132 atm or 0.130 bar.

Concentration – Mass fraction of pure solvent in working solution.

Loading – The basis for CO_2 loadings is moles of pure solvent.

Estimated Cost – Basis is kg/hr of CO_2 in CO_2-rich product gas; assuming targets are met.

Other Parameter Descriptions:

Chemical/Physical Solvent Mechanism – The mechanism of the absorption is a fast chemical reaction controlled by the liquid-side mass transfer.

technology advantages

- Greatly reducing regeneration energy compared with the MEA process.
- Higher absorption rate, resulting in lower capital investment for absorption equipment.
- Higher CO_2 working capacity, which will reduce sensible heat and solvent volume in circulation.
- Low corrosion rate to carbon steel compared to the MEA process.
- Potentially less solvent loss.
- Non-toxic, environmentally safe.

R&D challenges

- Process exists only at the laboratory scale and needs to be scaled-up.
- Moisture in flue gas may have impact on the process.

results to date/accomplishments

- Measured the absorption rate at 15, 25, 35, 45, and 55 °C.
- Measured the effect of absorbent concentration in solution (from 10 to 50 percent by volume) on absorption rate and loading capacity.
- Measured the effect of solution agitation speed (30, 60, and 90 rpm) on absorption rate.
- Measured the absorption rate at 1 atm of CO_2 partial pressure.
- Conducted the regeneration tests; measured the regeneration rate at different temperature.
- Conducted the corrosion tests for carbon steel coupon.
- Conduct the initial process evaluation based on the lab results and made the comparison with MEA absorption.

next steps

This project ended on June 30, 2009.

available reports/technical papers/presentations

Hu, L., "CO_2 Capture from Flue Gas by Phase Transitional Absorption." Final Report June 2009. *http://www.netl.doe.gov/File%20Library/Research/Coal/ewr/co2/phase-transitional-absorption-final-report-june2009.pdf*.

APPENDIX B: CARBON DIOXIDE CAPTURE TECHNOLOGY SHEETS

POST-COMBUSTION SORBENTS

BENCH-SCALE DEVELOPMENT AND TESTING OF RAPID PRESSURE SWING ABSORPTION FOR CARBON DIOXIDE CAPTURE

technology maturity:

Bench-Scale, Simulated Flue Gas

project focus:

Rapid Pressure Swing Adsorption

participant:

WR Grace

project number:

FE0007639

NETL project manager:

Barbara Carney
barbara.carney@netl.doe.gov

principal investigator:

James A. Ritter
University of South Carolina
ritter@cec.sc.edu

partners:

University of South Carolina
Catacel Corporation
Battelle Memorial Institute

performance period:

5/1/12 – 4/30/15

primary project goals

WR Grace and the University of South Carolina are developing a rapid pressure swing adsorption (PSA) process to evaluate concept cost and performance benefits by testing a bench-scale system using a low-cost, structured adsorbent with low-pressure drop, high mass-transfer rates, high capacity, and high availability that will enable large feed throughputs.

technical goals

- Develop an attrition-resistant and low-pressure drop structured adsorbent based on a commercial zeolite that is compatible with the high velocities associated with rapid PSA operation.
- Develop a rapid PSA cycle configuration in concert with the structured adsorbent so that the resulting rapid PSA process delivers an exceptional performance at reduced capital and operating costs.

technical content

PSA is attractive because it only requires electricity and not any of the power plant's steam. A PSA cycle has recently been developed for carbon dioxide (CO_2) capture that has a total separation energy of 25 kJ/mol compared to 39.0 kJ/mol for a monoethanolamine (MEA) system. This new PSA cycle achieves more than 90 percent CO_2 recovery and more than 95 vol percent CO_2 purity using commercial zeolite pellets. Although it could be retrofitted to a coal-fired power plant today, the columns would be exceedingly large and thus capital-intensive. A rapid PSA process, taking advantage of a much shorter cycle time, could potentially solve this problem by reducing the cycle time from 300 seconds (conventional PSA cycle) to 30 seconds or less. This would increase the feed throughput, and thus decrease the size of the columns by a factor of 10 or more, significantly reducing both the capital and operating costs, as well as the plant footprint.

The key challenge to the success of this concept is two-fold: (1) an attrition-resistant and low-pressure drop structured adsorbent must be developed based on commercial zeolite that is compatible with the high velocities associated with rapid PSA operation; and (2) a rapid PSA cycle configuration must be developed in concert with the structured adsorbent so that the resulting rapid PSA process achieves necessary cost and performance metrics.

One advantage of a rapid PSA process over other CO_2 adsorption processes is simplified heat management. The rapid cycle times minimize temperature swings. Thus, the columns will heat up only slightly during adsorption and cool down only slightly during desorption, approaching nearly isothermal operation, which is optimal.

Management of water will provide some operational challenges. Degradation of the PSA process performance in the presence of water is well documented. It is anticipated that for a rapid PSA CO_2 removal process, up to 95 percent of the water in the flue gas will need to be removed using commercial desiccant technology. This will increase capital and operating costs; however, any increases are more than offset by cost savings in other parts of the process.

The structured adsorbent to be developed will consist of zeolite crystals coated on a metal support. This process has been successfully demonstrated using metal foil, as shown in Figure 1.

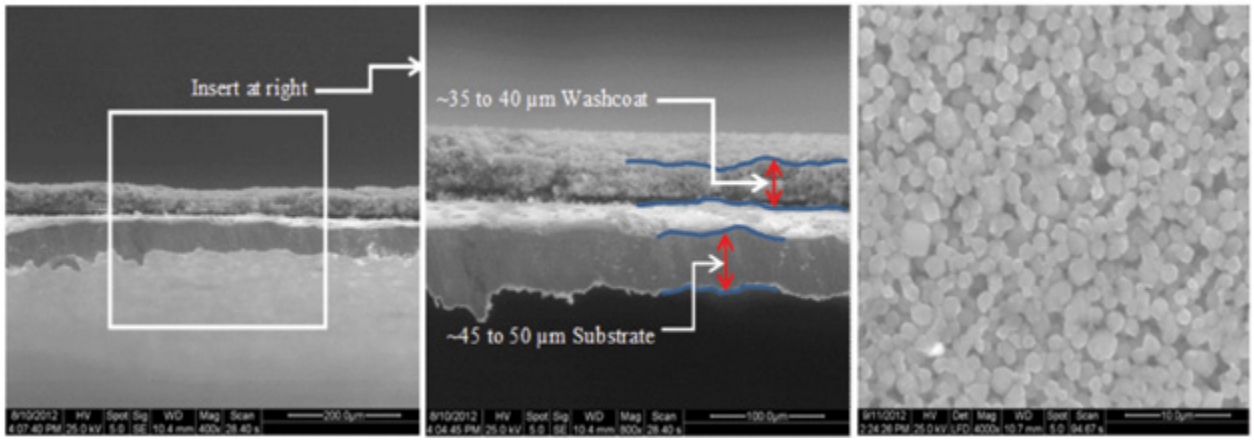

Figure 1: Edge View of Zeolite-Coated Metal Substrate at 400X Magnification (left); Edge View of Zeolite-Coated Metal Substrate at 800X Magnification Indicating Washcoat is 35-40 µm Thick (center); Top View of Zeolite-Coated Metal Foil Substrate at 4,000X Magnification (right)

Corrugated cores have been fabricated (Figure 2) to serve as the metal substrate for testing the rapid PSA process. These cores are currently being tested to evaluate pressure drop, and they will eventually be coated with zeolite crystals for process testing.

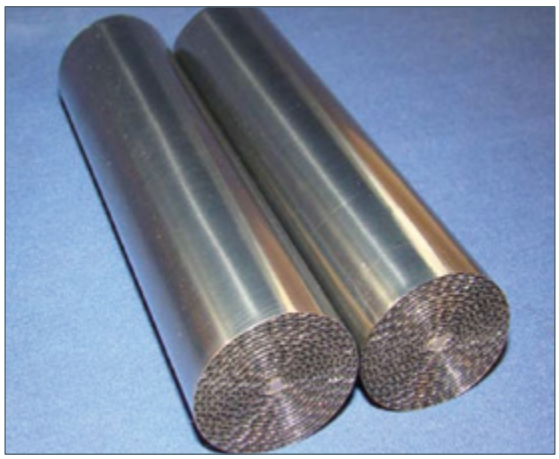

Figure 2: Side View of 1.5″ x 6″ x 289 cpsi Corrugated Cores

In addition, a dynamic volumetric frequency response (DVFR) apparatus (Figure 3) that is being used to characterize adsorbate mass-transfer rates in various adsorbents at cycle times up to 10 Hz, as well as a single-column rapid pressure swing adsorption (S-C rPSA) system (Figure 4), is being used to study the effect of cycle time on the mass-transfer rates at step times as short as 0.25 seconds.

Figure 3: Photograph of Dynamic Volumetric Frequency Response (DVFR) Apparatus

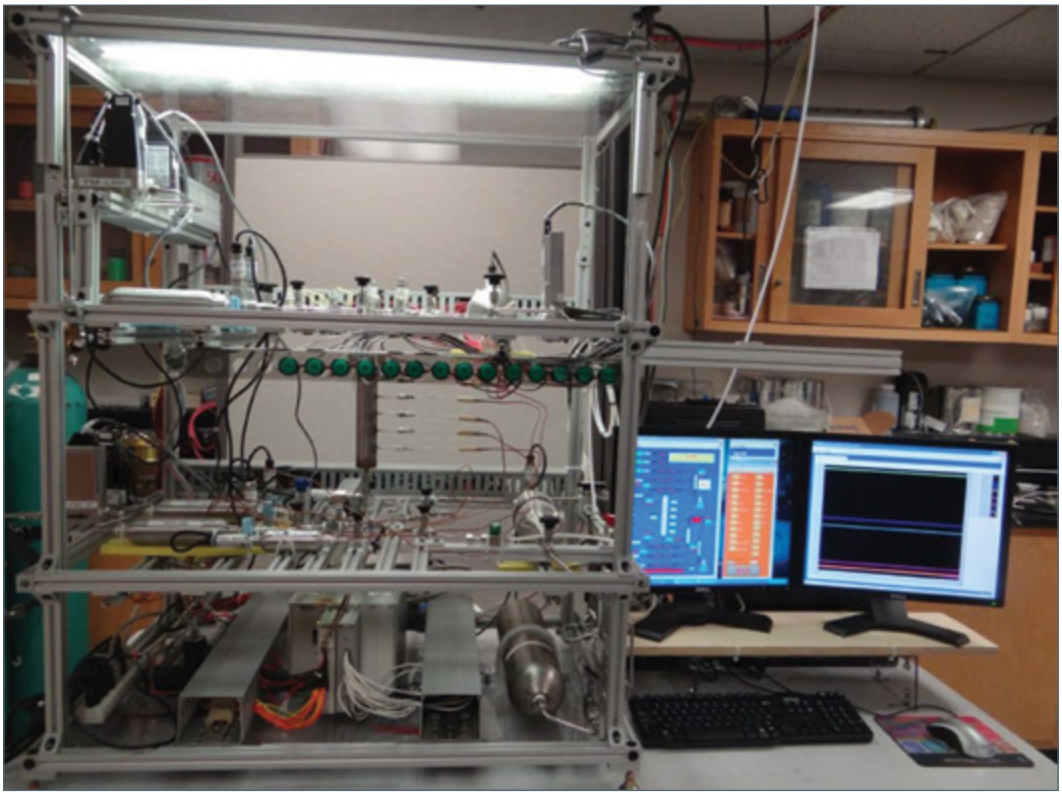

Figure 4: Photograph of Single-Column Rapid Pressure Swing Adsorption (S-C rPSA) System

TABLE 1: ADSORPTION-BASED POST-COMBUSTION CO_2/N_2 SEPARATIONS

	Units	Current R&D Value	Target R&D Value
Sorbent			
True Density @ STP[2]	kg/m^3	1,090	2,518
Bulk Density[3]	kg/m^3	688	400
Average Particle Diameter[4]	mm	5.0	0.100
Particle Void Fraction	m^3/m^3	0.47	0.47
Packing Density	m^2/m^3	750	6,070
Solid Heat Capacity @ STP[2]	kJ/kg-K	0.92	0.82
Crush Strength[5]	kg_f	3.6	N/A
Manufacturing Cost for Sorbent	$/kg	20	37.4
Adsorption[6]			
Pressure[7]	bar	1.2/1.14	1.2/1.14
Temperature	°C	50	50
Equilibrium Loading[8]	g mol CO_2/kg	4.18	4.18
Average Bed Loading @ End of HR step	g mol CO_2/kg	2.46*	2.50
Heat of Adsorption	kJ/mol CO_2	37.5-46.0	37.5-46.0
Desorption			
Pressure[7]	bar	0.05/0.00085	0.05/0.00085
Temperature	°C	50	50
Equilibrium Loading[9]	g mol CO_2/kg	0.14	0.14
Average Bed Loading @ End of LR step	g mol CO_2/kg	1.20*	1.20
Heat of Desorption	kJ/mol CO_2	37.5-46.0	37.5-46.0
Proposed Module Design		*(for equipment developers)*	
Flow Arrangement/Operation	-	Fixed bed/cyclic	Fixed bed/cyclic
Flue Gas Flowrate	kg/hr	2.32×10^6	2.32×10^6
CO_2 Recovery, Purity, and Pressure	% / % / bar	90%, 95%, 1.38 bar	
Adsorber Pressure Drop	bar	0.15	0.15
Estimated Absorber/Stripper Cost of Manufacturing and Installation	$\frac{\$}{kg/hr}$	45.4	49.2

1. For the Current R&D Value, the calculation is based on 5-mm 13X beads. For the Target R&D Value, the calculation is based on a 52-micron thick stainless steel support containing a 100-micron thick zeolite crystal coating at each side.
2. The Target R&D Value includes the stainless steel support.
3. The Target R&D Value corresponds to mass of adsorbent (zeolite) per volume of bed.
4. The Target R&D Value corresponds to coating thickness.
5. The structured support for the target will be unaffected by PSA dynamic stresses.
6. The adsorption step is considered as the Heavy Reflux step, which follows the feed step in the PSA cycle and is highly enriched in CO_2 and obtained from another desorption step in the PSA cycle.
7. First value is total pressure; second value is partial pressure of CO_2.
8. The value corresponds to conditions of the heavy product gas.
9. The value corresponds to conditions of the light product gas.

Definitions:

STP – Standard Temperature and Pressure (15°C, 1 atm).

Sorbent – Adsorbate-free (i.e., CO_2-free) and dry material as used in adsorption/desorption cycle.

Manufacturing Cost for Sorbent – "Current" is market price of material, if applicable; "Target" is estimated manufacturing cost for new materials, or the estimated cost of bulk manufacturing for existing materials.

Adsorption – The conditions of interest for adsorption are those that prevail at maximum sorbent loading, which typically occurs at the bottom of the adsorption column. These may be assumed to be 1 atm total flue-gas pressure (corresponding to a CO_2 partial pressure of 0.13 bar) and 40°C; however, measured data at other conditions are preferable to estimated data.

Desorption – The conditions of interest for desorption are those that prevail at minimum sorbent loading, which typically occurs at the bottom of the desorption column. Operating pressure and temperature for the desorber/stripper are process-dependent. Measured data at other conditions are preferable to estimated data.

Pressure – The pressure of CO_2 in equilibrium with the sorbent. If the vapor phase is pure CO_2, this is the total pressure; if it is a mixture of gases, this is the partial pressure of CO_2. Note that for a typical pulverized coal (PC) power plant, the total pressure of the flue gas is about 1 atm and the concentration of CO_2 is about 13.2 percent. Therefore, the partial pressure of CO_2 is roughly 0.132 atm or 0.130 bar.

Packing Density – Ratio of the active sorbent area to the bulk sorbent volume.

Loading – The basis for CO_2 loadings is mass of dry, adsorbate-free sorbent.

Flow Arrangement/Operation – Gas-solid module designs include fixed, fluidized, and moving bed, which result in either continuous, cyclic, or semi-regenerative operation.

Estimated Cost – Basis is kg/hr of CO_2 in CO_2-rich product gas; assuming targets are met.

Other Parameter Descriptions:

Chemical/Physical Sorbent Mechanism – The relative thermodynamic adsorption selectivity towards CO_2 over other gases such nitrogen (N_2), oxygen (O_2), and argon (Ar) on a commercial zeolite at partial pressures of CO_2 at around or below 1.0 bar.

Sorbent Contaminant Resistance – The effect of the contaminant sulfur dioxide (SO_2) is not clear yet; tests are planned. It is expected, however, that the 42 parts per million (ppm) in the fresh flue gas will be significantly reduced at the condensing heat exchanger that will be located upstream of the PSA unit. It is not expected that the zeolite will be irreversibly affected by nitrogen oxides (NO_x).

Sorbent Attrition and Thermal/Hydrothermal Stability – The sorbent will be deposited on the surface of a metal structured support; thus, thermal or mechanical stresses present in pelletized/beaded systems will not be observed.

Flue Gas Pretreatment Requirements – The flue gas requires a blower to bring the pressure up to 120 kPa and then a condensing heat exchanger followed by a dryer to bring the content of water to less than 0.1 vol percent prior to entering the PSA unit.

Sorbent Make-Up Requirements – There are no sorbent make-up requirements in PSA units. The structured adsorbent is expected to last at least 5 years and possibly 10 years before it needs to be replaced. This is common in commercial PSA systems.

Waste Streams Generated – There are no waste streams generated in the flowsheet. All potential waste streams are recycled and used in the process somewhere. For example, the condensing heat exchanger will produce about 460,000 lb/h of condensed water that is recycled back as makeup water for the flue gas desulfurization (FGD) unit. It may contain up to 1125 mg/L of dissolved SO_2 and no other contaminants. In addition, about 3.69 x 106 lb/h of N_2-rich product at about 80°C is vented into the air. This stream will contain, by volume, about 1.8% CO_2, 4.0% H_2O, 3.3% O_2, 1.09% Ar, and balance N_2.

Proposed Module Design – Note the module location, as well as the pressure, temperature, and composition of the gas entering the module. The table below shows all the stream compositions and conditions throughout the proprietary process flowsheet. Column 7 (i.e., stream 7) is the feed to the PSA unit, which comes after the FGD unit and the water removal units described above. In addition, it is expected that stream 7 will have less than 2 parts per million by volume (ppmv) of sulfur oxides (SO_x) and about 92 ppmv of NO_x.

TABLE 2: STREAM COMPOSITIONS AND CONDITIONS IN EACH OF THE STREAMS (# COLUMNS) IN THE PROPRIETARY PROCESS FLOWSHEET

	1	2	3	4	5	6	7	8	9	10
V-L Mass Fraction										
CO_2	20.28%	20.28%	0.00%	22.28%			22.56%	2.60%	2.60%	2.81%
H_2O	10.87%	10.87%	100.00%	2.09%	100.00%	100.00%	0.06%	0.00%	0.00%	2.57%
N_2	65.11%	65.11%	0.00%	71.52%			73.17%	92.06%	92.06%	89.44%
O_2	2.62%	2.62%	0.00%	2.88%			2.95%	3.74%	3.74%	3.63%
Ar	1.12%	1.12%	0.00%	1.23%			1.26%	1.60%	1.60%	1.55%
V-L Mole Fraction										
CO_2	13.17%	13.17%	0.00%	15.36%			15.77%	1.69%	1.69%	1.80%
H_2O	17.25%	17.25%	100.00%	3.52%	100.00%	100.00%	0.10%	0.00%	0.00%	4.01%
N_2	66.44%	66.44%	0.00%	77.46%			80.34%	93.83%	93.83%	89.90%
O_2	2.34%	2.34%	0.00%	2.73%			2.83%	3.34%	3.34%	3.20%
Ar	80.00%	80.00%	0.00%	93.00%			0.97%	1.14%	1.14%	1.09%
V-L Mole Fraction (Dry Basis)										
CO_2	15.92%	15.92%	0.00%	15.92%			15.78%	1.69%	1.69%	1.87%
N_2	80.29%	80.29%	0.00%	80.29%			80.42%	93.83%	93.83%	93.66%
O_2	2.83%	2.83%	0.00%	2.83%			2.83%	3.34%	3.34%	3.33%
Ar	97.00%	97.00%	0.00%	97.00%			0.97%	1.14%	1.14%	1.14%
V-L Flowrate (10^6 lb/hr)	5.12	5.12	0.46	4.66	29.38	29.38	4.55	3.59	3.59	3.69
V-L Flowrate (10^4 lb mol/hr)	17.91	17.91	2.55	15.36	163.22	163.22	14.82	12.57	12.57	13.11
V-L Flowrate (10^4 SLPM)	3,039.38	3,039.38	432.62	2,607.36	27,698.57	27,698.57	2,514.09	2,132.28	2,132.28	2,225.55
Temperature (°F)	135.00	135.00	86.00	86.00	60.00	80.00	122.00	122.00	219.36	175.60
Pressure (psia)	14.70	14.70	14.70	17.38	20.00	19.00	17.24	15.06	14.86	14.72

	11	12	13	14	15	16	17	18	19	
V-L Mass Fraction										
CO_2	96.49%	96.49%	96.49%	96.49%					96.74%	
H_2O	0.28%	0.28%	0.28%	0.28%	100.00%	100.00%	100.00%	100.00%	2.00%	
N_2	3.23%	3.23%	3.23%	3.23%					3.24%	
O_2	0.00%	0.00%	0.00%	0.00%					0.00%	
Ar	0.00%	0.00%	0.00%	0.00%					0.00%	
V-L Mole Fraction										
CO_2	94.37%	94.37%	94.37%	94.37%					94.95%	
H_2O	66.00%	66.00%	66.00%	66.00%	100.00%	100.00%	100.00%	100.00%	5.00%	
N_2	4.97%	4.97%	4.97%	4.97%					5.00%	
O_2	0.00%	0.00%	0.00%	0.00%					0.00%	
Ar	0.00%	0.00%	0.00%	0.00%					0.00%	
V-L Mole Fraction (Dry Basis)										
CO_2	95.00%	95.00%	95.00%	95.00%					95.00%	
N_2	5.00%	5.00%	5.00%	5.00%					5.00%	
O_2	0.00%	0.00%	0.00%	0.00%					0.00%	
Ar	0.00%	0.00%	0.00%	0.00%					0.00%	
V-L Flowrate (10^6 lb/hr)	1.28	1.28	0.97	0.31	7.18	7.18	0.87	0.87	0.97	
V-L Flowrate (10^4 lb mol/hr)	2.97	2.97	2.25	0.72	55.66	39.91	4.85	4.85	2.24	
V-L Flowrate (10^4 SLPM)	504.34	504.34	381.81	122.53	9,445.33	6,772.09	823.84	823.84	379.48	
Temperature (°F)	122.00	122.00	122.00	122.00	60.00	80.00	60.00	80.00	104.00	
Pressure (psia)	1.20	20.00	20.00	20.00	20.00	19.00	20.00	19.00	2,215.00	

technology advantages

- Established large-scale technology for other applications.
- Needs no steam or water, only electricity.
- Tolerant to trace contaminants; possibly with use of guard or layered beds.
- Zeolite adsorbent commercial and widely available.
- Increase in cost of electricity (COE) lower than other capture technologies.
- If research and development (R&D) is successful, beds can be installed under a parking lot.

R&D challenges

- Energy-intensive, but better than current amines.
- Large beds required; implies large pressure drop, using more power.
- Large footprint.
- High capital cost.

results to date/accomplishments

- The PSA cycle was developed via process simulation that indicates a total separation energy of 24.6 kJ/mol (18.5 kJ/mol CO_2 removed for the PSA unit) and requires a small footprint (approximately 15 percent of a football field).
- A metal foil was successfully coated with commercial zeolite crystals, with the coating comprising approximately 85 percent zeolite and 15 percent inorganic binder, and having a nominal loading of 141 mg/in2.
- Several commercial zeolite crystals have been screened for CO_2 working capacity (using thermo gravimetric analysis [TGA]), and some candidate materials have been identified.
- Construction of an S-C rPSA system has been completed, and initial testing is underway. Construction of additional multi-bed, bench-scale demonstration systems is ongoing and about 50 percent complete.
- An in-house constructed volumetric frequency response system is being used to measure mass-transfer rates in various commercial adsorbents up to 10 Hz.
- Construction of the pressure drop system for measuring pressure drop through fixed and structured beds of adsorbents has been completed and testing with candidate beds is underway.
- A computational fluid dynamics (CFD) model for a geometry characteristic of a typical structured sorbent material has been developed and is currently under refinement.

next steps

- Continue to refine the PSA cycle using process simulation and continuously measured thermodynamic and mass-transfer data to reduce energy consumption.
- Continue to characterize structured adsorbent materials to find optimum CO_2 loading and mass-transfer characteristics.
- Continue to operate the S-C rPSA system to study the role of cycle time on the mass-transfer rates.
- Finish construction of the multi-bed experimental apparatus that will be used to demonstrate the rapid PSA technology at the bench scale.
- Continue to modify the coating process to optimize the zeolite loading on the metal foil.
- Continue to develop and refine the CFD model to optimize the geometry and minimize pressure drop through the structured adsorbent material.
- Based on CFD results, continue to manufacture new structured sorbent configurations to minimize pressure drop.

Ritter, James A., " Bench-scale Development and Testing of Rapid PSA for CO2 Capture," presented at the 2012 NETL CO2 Capture Technology Meeting, Pittsburgh, PA, July 2012 *http://www.netl.doe.gov/publications/proceedings/12/co2capture/presentations/1-Monday/J%20Ritter-USC-RPSA.pdf*.

BENCH-SCALE DEVELOPMENT OF AN ADVANCED SOLID SORBENT-BASED CO_2 CAPTURE PROCESS FOR COAL-FIRED POWER PLANTS

primary project goals

The goal of this project is to address the technical and economic hurdles to developing a sorbent-based carbon dioxide (CO_2) capture process by transitioning a promising sorbent chemistry, based on molecular basket sorbent (MBS) materials, to a low-cost sorbent suitable for use in a fluidized-bed process and developing a scalable circulating fluidized, moving-bed reactor (FMBR) process arrangement.

technical goals

- Improve the thermal and chemical stability of the base polyethyleneimine (PEI) reactant while transitioning the current fixed-bed form MBS material into a fluidizable form.
- Collect critical process engineering data using bench-scale testing equipment to allow for a detailed design of a CO_2 capture prototype system based on improved MBS materials.
- Improve reactor design, optimize operability, and optimize heat integration strategies for the FMBR system.
- Scale-up advanced MBS materials to roughly 1,000 lbs production for use in the CO_2 capture prototype system.
- Demonstrate the technical and economic feasibility of a commercial embodiment of the MBS-based CO_2 capture process through a detailed technology feasibility study.

technical content

The project team is developing an advanced sorbent process that utilizes a polymeric amine-based CO_2 sorbent developed by Pennsylvania State University (PSU) under a previous project (DE-FE-0000458) to capture CO_2 from coal-fired power plant flue gas. The solid sorbent consists of a high-surface area support, such as silica, impregnated with branched PEI polymer, as exhibited in Figure 1.

technology maturity:

Laboratory-Scale, Simulated Flue Gas

project focus:

Advanced Solid Sorbents and Processes for CO_2 Capture

participant:

RTI International

project number:

FE0007707

NETL project manager:

Bruce Lani
bruce.lani@netl.doe.gov

principal investigator:

Thomas Nelson
RTI International
tnelson@rti.org

partners:

Pennsylvania State University
Masdar New Ventures
Masdar Institute
Clariant
Foster Wheeler Corporation

performance period:

10/1/11 – 3/31/15

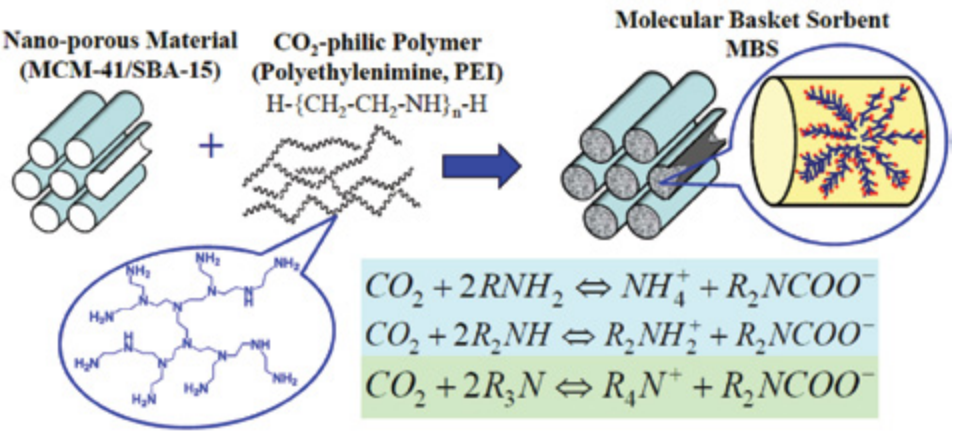

Figure 1: Molecular Basket Sorbent Concept

The branched polymer contains primary, secondary, and tertiary amine sites that absorb CO_2. Carbon dioxide adsorption is favored between 50 to 90°C (122 to 194°F), with a heat of reaction of ΔHAbs = 66 kJ/mol- CO_2 (645 Btu/lb- CO_2). At temperatures greater than 110°C (230°F), the reverse reactions predominate and the sorbent releases CO_2.

This advanced sorbent CO_2 capture process operates as a cyclic absorption-regeneration thermal swing process where the solid sorbent is continuously circulated between two FMBRs – a CO_2 absorber and a sorbent regenerator. A basic block flow diagram of this process, installed within a pulverized coal (PC)-fired power plant, is provided in Figure 2.

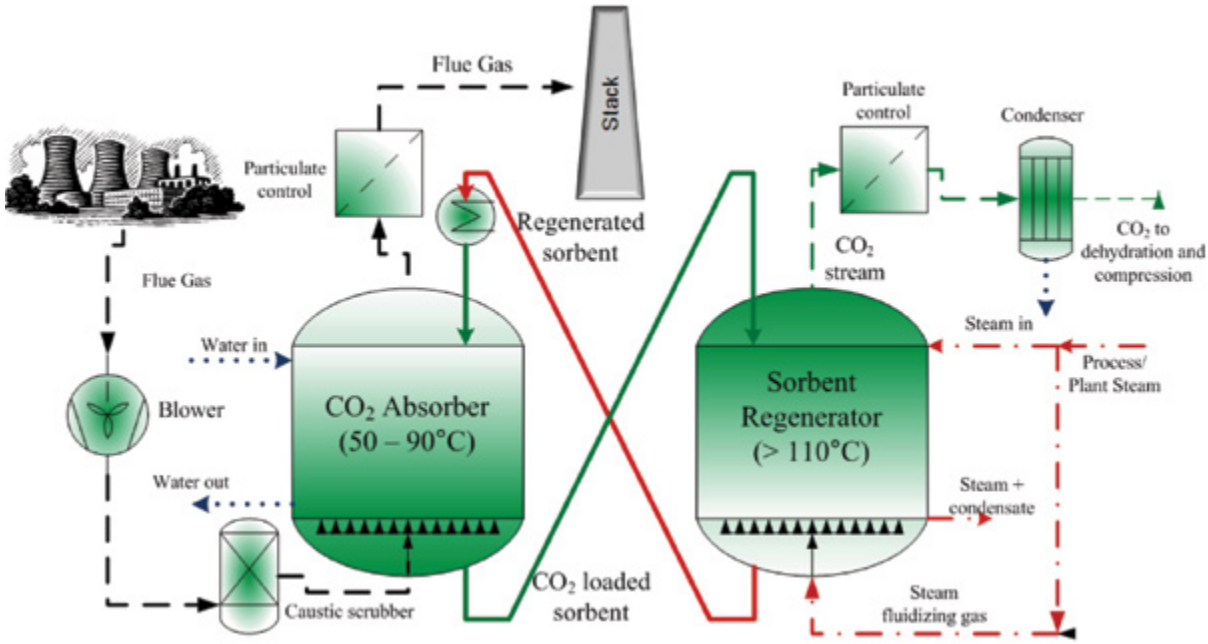

Figure 2: Block Flow Diagram of Advanced Solid Sorbent CO_2 Capture Process

Carbon dioxide-rich flue gas from the PC power plant goes through a caustic scrubbing system to remove strong acid gases prior to entering the CO_2 absorber. The CO_2 absorber is designed as an FMBR. Within the absorber, flue gas comes in contact with lean sorbent that is fed to the absorber from the sorbent regenerator. The sorbent selectively removes CO_2 and generates heat due to the heat of reaction for CO_2 removal. In order to control the sorbent bed temperature, cooling water is used to cool the sorbent through indirect contact. Treated flue gas exits the CO_2 absorber and enters a baghouse filter for removal of particulates, primarily attrited sorbent particles. Following particulate removal, the flue gas is then directed to the stack and vented.

The CO_2-rich sorbent exits the absorber and is transported to the sorbent regenerator. The sorbent regenerator design and operation is similar to the CO_2 absorber, except that the sorbent bed is indirectly heated with condensing steam in order to strip the sorbent of the absorbed CO_2. The regenerated sorbent produces a concentrated CO_2 gas stream that is swept out of the sorbent

regenerator with a CO_2 sweep gas. The concentrated CO_2 gas stream is then sent to a dehydration and compression unit, and the sorbent is transferred through a sorbent cooling unit and on to the CO_2 absorber for continued CO_2 removal. Fresh sorbent is added to this stream to make up for attrited sorbent and diminished sorbent performance.

Project Scope: A preliminary technology feasibility study of the MBS-based process to provide baseline projections for energy penalty, capital, operating, and overall CO_2 capture costs has been conducted. RTI, PSU, and Clariant will transition PSU's current MBS-powdered material to a fluidizable sorbent that can be readily scaled-up. The team will use new preparation procedures, transition sorbent formulations to commercial precursor materials, and adapt acceptable manufacturing procedures to this new type of sorbent. RTI will lead an effort to conduct process evaluations in a bench-scale, single-stage, fluidized-bed unit capable of sustained CO_2 capture and sorbent regeneration. RTI, assisted by an engineering fabrication company, will then lead the design and fabrication of a bench-scale, continuous-flow CO_2 capture prototype system. This system will be integrated and commissioned at the University of North Carolina at Chapel Hill's (UNCH-CH) coal-fired power plant, where extensive parametric and long-term flue gas testing will be performed. Masdar New Ventures will co-fund the project.

TABLE 1: ADSORPTION-BASED POST-COMBUSTION CO_2/N_2 SEPARATIONS

	Units	Current R&D Value	Target R&D Value
Sorbent			
True Density @ STP	kg/m^3	N/A	N/A
Bulk Density	kg/m^3	≈ 500	≈ 1,000
Average Particle Diameter	mm	≈ 0.1	0.05 to 0.2
Particle Void Fraction	m^3/m^3	not measured	TBD
Packing Density	m^2/m^3	not measured	TBD
Solid Heat Capacity @ STP	kJ/kg-K	1.53	1.1 to 1.5 (1.2)
Crush Strength	kg_f	N/A	N/A
Manufacturing Cost for Sorbent	$/kg	N/A	< $10/kg
Adsorption			
Pressure	bar	1.01	1.01
Temperature	°C	75	60 to 90
Equilibrium Loading	g mol CO_2/kg-sorbent	2.27	3.18
Heat of Adsorption	kJ/mol CO_2	66	60 to 70
Desorption			
Pressure	bar	1.01	1.01
Temperature	°C	100	>110
Equilibrium Loading	g mol CO_2/kg-sorbent	0.68	0.45
Heat of Desorption	kJ/mol CO_2	78	70 to 80
Proposed Module Design		*(for equipment developers)*	
Flow Arrangement/Operation	-	—-	—-
Flue Gas Flowrate	kg/hr	—-	—-
CO_2 Recovery, Purity, and Pressure	% / % / bar	—-	
Adsorber Pressure Drop	bar	—-	—-
Estimated Absorber/Stripper Cost of Manufacturing and Installation	$ / kg/hr	—-	—-

Definitions:

STP – Standard Temperature and Pressure (15°C, 1 atm).

Sorbent – Adsorbate-free (i.e., CO_2-free) and dry material as used in adsorption/desorption cycle.

Manufacturing Cost for Sorbent – "Current" is market price of material, if applicable; "Target" is estimated manufacturing cost for new materials, or the estimated cost of bulk manufacturing for existing materials.

Adsorption – The conditions of interest for adsorption are those that prevail at maximum sorbent loading, which typically occurs at the bottom of the adsorption column. These may be assumed to be 1 atm total flue-gas pressure (corresponding to a CO_2 partial pressure of 0.13 bar) and 40°C; however, measured data at other conditions are preferable to estimated data.

Desorption – The conditions of interest for desorption are those that prevail at minimum sorbent loading, which typically occurs at the bottom of the desorption column. Operating pressure and temperature for the desorber/stripper are process-dependent. Measured data at other conditions are preferable to estimated data.

Pressure – The pressure of CO_2 in equilibrium with the sorbent. If the vapor phase is pure CO_2, this is the total pressure; if it is a mixture of gases, this is the partial pressure of CO_2. Note that for a typical PC power plant, the total pressure of the flue gas is about 1 atm and the concentration of CO_2 is about 13.2 percent. Therefore, the partial pressure of CO_2 is roughly 0.132 atm or 0.130 bar.

Packing Density – Ratio of the active sorbent area to the bulk sorbent volume.

Loading – The basis for CO_2 loadings is mass of dry, adsorbate-free sorbent.

Flow Arrangement/Operation – Gas-solid module designs include fixed, fluidized, and moving bed, which result in either continuous, cyclic, or semi-regenerative operation.

Estimated Cost – Basis is kg/hr of CO_2 in CO_2-rich product gas; assuming targets are met.

Other Parameter Descriptions:

Sorbent Contaminant Resistance – Most, if not all materials used for CO_2 capture, including aqueous amine solvents, alkaline and alkali-based solvents and sorbents, and the amine-based sorbents being developed in this project, have a high affinity for strong acid gases, including sulfur oxide (SO_x), nitrogen oxide (NO_x), and hydrogen chloride (HCl). Considerations have been made regarding how to implement contaminant control within the overall CO_2 capture system. Resistance to trace metal contaminants is unknown at this point.

Sorbent Attrition and Thermal/Hydrothermal Stability – Sorbent attrition will be a function of the process operating environment and physical strength of the sorbent. These will be measured and observed during larger-scale testing campaigns. The base PEI reagent suffers from performance instability at temperatures greater than 110°C. One of the focuses of this project is to improve the sorbent performance stability.

Flue Gas Pretreatment Requirements – Most likely, the flue gas will require a scrubbing of acid gases prior to entering the CO_2 absorber containing the sorbent being developed in this project.

Sorbent Make-Up Requirements – Continuous sorbent make-up will be required during operation of a commercial system in order to replenish sorbent lost to attrition, entrainment, and deactivation by reaction with contaminants.

Waste Streams Generated – As a whole, the process generates few waste streams. It is expected that a continuous purge of sorbent will be required to maintain a desired level of CO_2 removal within the sorbent bed. In addition, sorbent will be lost from the process through attrition and entrainment. The sorbent can either be treated and reused, or disposed of following minimal treatment.

technology advantages

- Potential for reduced parasitic loads and lower capital and operating costs than conventional technology.
- High CO_2 loading capacity.
- Relatively low heat of absorption.
- Reactor design offers superior gas-solid heat and mass transfer characteristics.
- Counter current gas-solids flow maximizes CO_2 driving force.
- Needed process equipment exists and is used industrially.

R&D challenges

- Performance stability above 100°C is not ideal.
- Further sorbent cost reduction is needed.
- Heat management and novel heat integration strategies are critical to reduce parasitic power losses.
- Water management is critical to avoid condensation.
- Novel process design has not been tested/evaluated at commercial-scale for CO_2 capture.

results to date/accomplishments

- Screened and tested more than 20 commercially available, low-cost support materials using an automated, packed-bed absorption system.
- Identified a low-cost support material yielding a sorbent with comparable performance to expensive, mesoporous silica.
- Demonstrated that adding a small amount of moisture to the regeneration gas dramatically improves the multi-cycle performance stability of the MBS material.
- Significant sorbent stability improvement demonstrated at 120°C through process condition selection, sorbent complexation, and cross-linking pathways.
- Sorbent has been prepared through spray drying to make fluidizable particles.
- Demonstrated that water can replace methanol (or any alcohol) as the amine impregnation solvent.
- Developed a fluidized-bed reactor model.
- Developed a preliminary bench-scale system design package.
- Completed a preliminary technology feasibility study projecting capture costs of $36 to $42/tonne CO_2 captured.

next steps

- Continue improvement of MBS stability by increasing amine-support interaction and novel cross-linking activities.
- Design a bench-scale FMBR system and internal heat-management system.
- Conduct parametric studies of economic/process variables for the bench-scale FMBR system.
- Develop a detailed design and engineering package for a high-fidelity, bench-scale prototype.
- Scale-up novel MBS materials to 1,000 lbs.
- Conduct long-term testing of the prototype system flue gas from a fossil fuel-fired facility.
- Conduct a detailed techno-economic study that results in a high confidence level that the technology can meet U.S. Department of Energy goals.

available reports/technical papers/presentations

Nelson, T, et al., "Advanced Solida Sorbents and Process Designs for Post-Combustion CO2 Capture," presented at the 2012 NETL CO2 Capture Technology Meeting, Pittsburgh, Pennsylvania, July 2012. *http://www.netl.doe.gov/publications/proceedings/12/co2capture/presentations/1-Monday/T%20Nelson-RTI-Adv%20Solid%20Sorbents.pdf*.

EVALUATION OF SOLID SORBENTS AS A RETROFIT TECHNOLOGY FOR CO_2 CAPTURE FROM COAL-FIRED POWER PLANTS

primary project goals

ADA Environmental Solutions (ADA-ES) is designing and constructing a 1-megawatt (MW) pilot plant to demonstrate solid sorbent-based post-combustion carbon dioxide (CO_2) capture technology to reduce uncertainty of scale-up and accelerate the path to commercialization.

technical goals

Validate and optimize a solid sorbent-based post-combustion CO_2 capture technology through 1-MW slipstream pilot testing and process modeling to enable the conceptual development and techno-economic analysis of a 550-megawatt electric (MWe) facility.

technical content

ADA-ES is developing a post-combustion CO_2 capture process using solid sorbents. The viability assessment included laboratory-scale and 1-kilowatt (kW) pilot-scale sorbent screening and a commercial-scale equipment study in a separate U.S. Department of Energy (DOE) project (DE-NT0005649). The specific work completed under the viability assessment included:

- Evaluated more than 100 potential CO_2 sorbents, which were procured from various CO_2 solid sorbent developers worldwide. Sorbents were evaluated on the basis of cyclic stability, CO_2 capacity, working CO_2 capacity, availability, cost of raw materials, production process, manageable disposal costs (low toxicity), interaction with flue gas constituents, adequate physical strength, and theoretical regeneration energy. The CO_2 sorbents were investigated in such a way to assess their respective performances in a temperature swing adsorption (TSA) process. Table 1 displays the key properties used to evaluate CO_2 sorbents.

technology maturity:

Pilot-Scale, 1-MW Slipstream of Actual Flue Gas

project focus:

Solid Sorbents as Retrofit Technology

participant:

ADA-ES

project number:

NT0004343
NT0005649

NETL project manager:

Bruce Lani
bruce.lani@netl.doe.gov

principal investigator:

Sharon M. Sjostrom
ADA-ES, Inc.
sharons@adaes.com

partners:

EPRI
Southern Company
Stantec Consulting, Ltd.

performance period:

9/30/08 – 12/31/14

TABLE 1: KEY PROPERTIES USED TO EVALUATE CO_2 SORBENTS

Physical Property	Current Range	Goal
True Density @ Sorbent Particle Size (mm)	Highly varied and controllable	≈0.1-5
Sorbent Surface Area (m^2/g)	0.5 – 3,000	0.5 – 1,500
Sorbent Active Component Concentration (wt%)	5 – 60	10 – 100
Shape of Sorbent	Varied	Spherical
Density of Sorbent (g/cm^3 [lb/ft^3])	0.2 – 0.6 [15 – 40]	Dependent on process design
Mechanical Strength	Not reported	Dependent on process design
Attrition Fines: Form, Processing, and Fate	Not reported	Low attrition, potential for re-use desired, non-volatile, non-hazardous disposal

The lab-scale tests typically consisted of <3 grams of the adsorbents exposed to simulated flue gas and then regenerated by a temperature swing with a humid nitrogen sweep gas. For the adsorption step, the simulated flue gas was 55°C (130°F) with oxygen and CO_2 concentrations of 4 percent and 12 percent, respectively. The moisture level was varied (0%, 50%, or 90% relative humidity). The regeneration temperature was varied between 65 to 250°C (150 to 480°F).

- A 1-kW transport-reactor pilot was constructed to more thoroughly investigate the most positively rated adsorbents tested at the laboratory scale. More than 90 percent CO_2 removal was achieved repeatedly in batch mode with one supported amine sorbent at two field sites.
- In a concurrent effort to the sorbent evaluation, a technology survey was completed to identify potential commercial and conceptual processes and equipment options for use in retrofitting the existing fleet of coal-fired power plants for post-combustion CO_2 capture. Different equipment options were selected for the adsorption, regeneration, and cooling sections and pieced together to form the conceptual design of the commercial-scale process. The technologies selected were proven the most reliable, cost-effective, and versatile options available.

The current project (DE-FE0004343) includes development of a commercial-scale (550 MWe) conceptual process and validation using a 1 MWe-scale pilot. The information gained from the 1-MW pilot operation will be used to complete a technical and economic analysis of the commercial-scale process. Three project phases are planned:

- In Phase 1, a 550-MW conceptual design was developed and a 1-MW pilot plant was designed. A simplified sketch of the commercial concept integrated into an existing coal-fired power plant is presented in Figure 1. The sorbent-based CO_2 capture process is implemented immediately upstream of the stack. Based on the properties of one promising sorbent, four adsorption/regeneration trains are required to remove 90 percent of the CO_2 being exhausted from a 550-MWe subcritical coal-fired power plant.

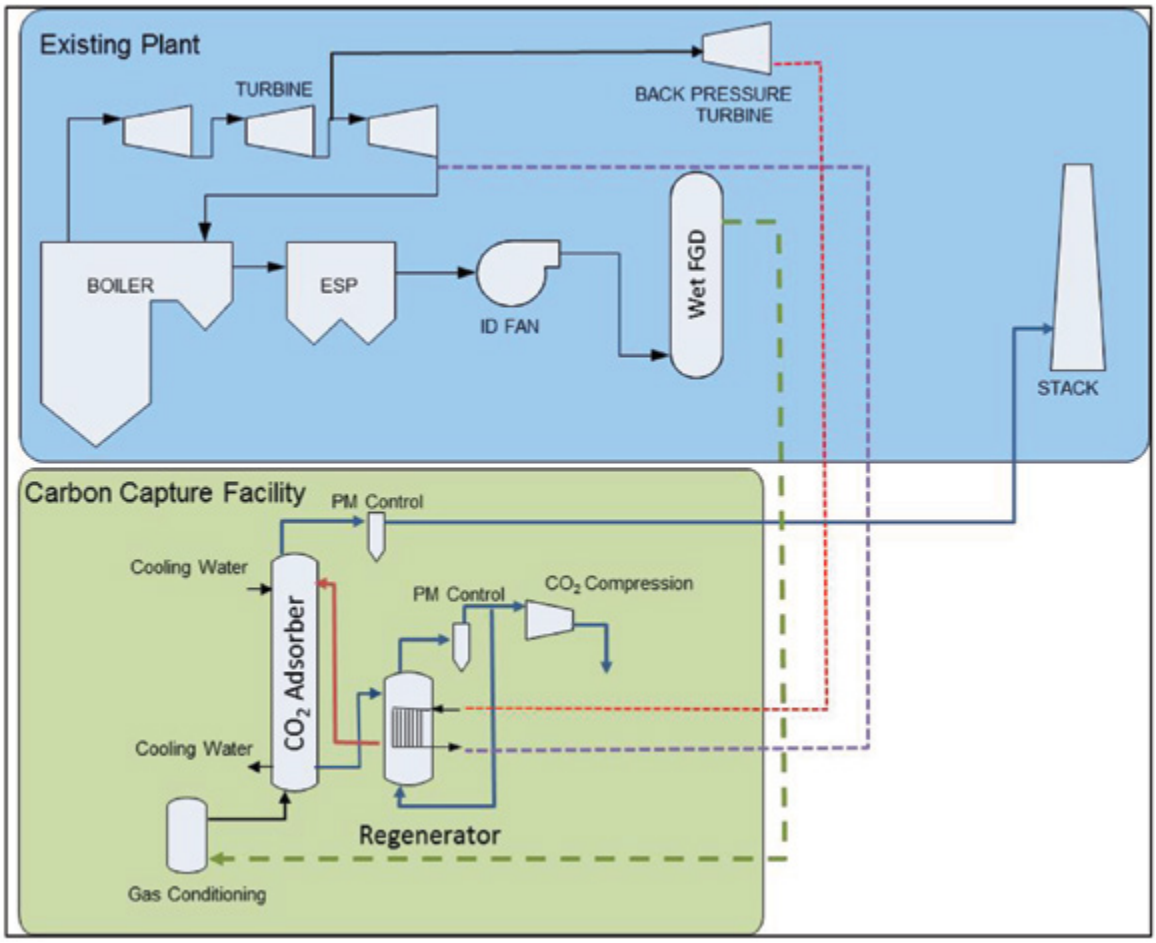

Figure 1: Process Flow Diagram of a Subcritical PC Power Plant Retrofitted with a Solid–Based CO_2 Capture Process

The process was designed to minimize CO_2 capture costs, primarily by providing the sorbent with the conditions necessary to achieve the highest possible CO_2 working capacity. This is accomplished through two important process characteristics: (1) isothermal operation and (2) approaching counter-current gas/solids contacting in the adsorber. Note that in Figure 1, the regenerator is shown as a single stage, but multiple stages could also be used if it was economically advantageous to use steam to drive off more CO_2 during regeneration. Improvements in sorbent CO_2 capture performance or altered operating conditions could decrease the overall process costs, but for all sorbents it is important to evaluate whether the process can be improved further by incorporating heat integration.

- Phase II is currently underway and includes 1-MWe detailed engineering, construction, installation, and tie-in of the pilot plant at a coal-fired power plant site. This phase is scheduled to be completed by the end of 2013. A 3D model of the pilot is shown in Figure 2.

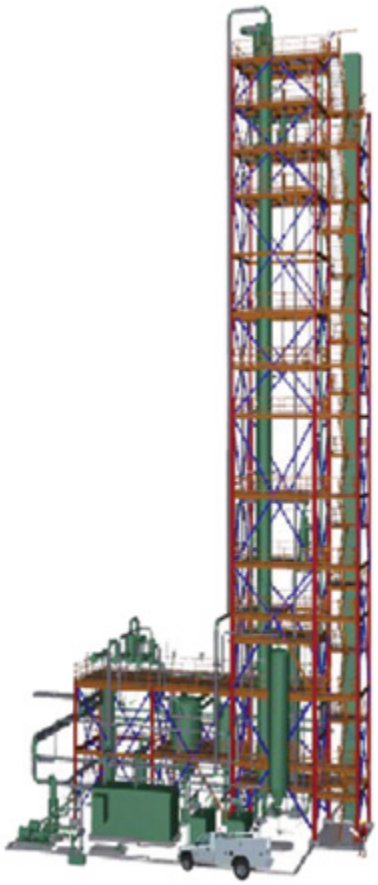

Figure 2: 3D Model of 1-MWe Pilot of CO_2 Capture Process

- Phase III will include field-testing with the 1-MWe pilot, system analysis, and a techno-economic assessment of the full-scale process. Planned field-testing includes parametric studies and up to two months of continuous pilot operation to validate pilot plant performance.

Specific objectives for the current project include:

- Demonstrate the technical, economic, and energy benefits of a promising CO_2 capture technology.
- Develop performance data through the operation of the system on flue gas, including temperature control and optimized system heat recovery.
- Measure process conditions, including sorbent heat of reaction, sorbent working capacity, sorbent attrition, system pressure drop, and CO_2 capture.
- Assess sorbent performance sensitivity to flue gas constituents.
- Operate continuously for at least two months to identify operating and maintenance issues and system reliability.
- Remove at least 90 percent of the incoming CO_2 from the flue gas.
- Produce high-purity CO_2 that will be capable of meeting pipeline standards.
- Conduct a techno-economic analysis of the commercial design.

The sorbent and process properties identified to date are provided in Table 2.

TABLE 2: PROCESS PARAMETERS FOR SOLID SORBENT

	Units	Current R&D Value	Target R&D Value
Sorbent			
True Density @ STP	kg/m^3	646	646
Bulk Density	kg/m^3	453	453
Average Particle Diameter	mm	0.1	0.1
Particle Void Fraction	m^3/m^3	0.418	0.418
Packing Density	m^3/m^3	N/A	N/A
Solid Heat Capacity @ STP	m^2/m^3	1.05	1.05
Crush Strength	kJ/kg-K	2.2	2.2
Manufacturing Cost for Sorbent	kg_f	≈$150	$20-$40
Adsorption			
Pressure	bar	1	1
Temperature	°C	40	40
Equilibrium Loading	g mol CO_2/kg-sorbent	2.4	2.4
Heat of Adsorption	kJ/mol CO_2	-60	-60
Desorption			
Pressure	bar	1	1
Temperature	°C	120	120
Equilibrium Loading	g mol CO_2/kg-sorbent	0.8	0.8
Heat of Desorption	kJ/mol CO_2	60	60
Proposed Module Design		*(for equipment developers)*	
Flow Arrangement/Operation	-	Fluidized bed, temperature swing adsorption	
Flue Gas Flowrate	kg/hr	3500	
CO_2 Recovery, Purity, and Pressure	% / % / bar	90%, 85% CO_2, 15% H_2O), Ambient	
Adsorber Pressure Drop	bar	0.55	
Estimated Absorber/Stripper Cost of Manufacturing and Installation	$\frac{\$}{kg/hr}$	TBD	

Definitions:

STP – Standard Temperature and Pressure (15°C, 1 atm).

Sorbent – Adsorbate-free (i.e., CO_2-free) and dry material as used in adsorption/desorption cycle.

Manufacturing Cost for Sorbent – "Current" is market price of material, if applicable; "Target" is estimated manufacturing cost for new materials, or the estimated cost of bulk manufacturing for existing materials.

Adsorption – The conditions of interest for adsorption are those that prevail at maximum sorbent loading, which typically occurs at the bottom of the adsorption column. These may be assumed to be 1 atm total flue-gas pressure (corresponding to a CO_2 partial pressure of 0.13 bar) and 40°C; however, measured data at other conditions are preferable to estimated data.

Desorption – The conditions of interest for desorption are those that prevail at minimum sorbent loading, which typically occurs at the bottom of the desorption column. Operating pressure and temperature for the desorber/stripper are process-dependent. Measured data at other conditions are preferable to estimated data.

Pressure – The pressure of CO_2 in equilibrium with the sorbent. If the vapor phase is pure CO_2, this is the total pressure; if it is a mixture of gases, this is the partial pressure of CO_2. Note that for a typical pulverized coal (PC) power plant, the total pressure of the flue gas is about 1 atm and the concentration of CO_2 is about 13.2 percent. Therefore, the partial pressure of CO_2 is roughly 0.132 atm or 0.130 bar.

Packing Density – Ratio of the active sorbent area to the bulk sorbent volume.

Loading – The basis for CO_2 loadings is mass of dry, adsorbate-free sorbent.

Flow Arrangement/Operation – Gas-solid module designs include fixed, fluidized, and moving bed, which result in either continuous, cyclic, or semi-regenerative operation.

Estimated Cost – Basis is kg/hr of CO_2 in CO_2-rich product gas; assuming targets are met.

Other Parameter Descriptions:

Chemical/Physical Sorbent Mechanism – The sorbent selected for this project is an ion exchange resin with a primary benzyl amine that removes CO_2 in a TSA process. It is important to note that other supported amine sorbents with similar enthalpy of adsorption and physical properties could also be used in the same process without major equipment changes.

One of the most important sorbent properties for post-combustion CO_2 capture is the CO_2 working capacity. Isotherms were generated using experimental data and the Langmuir isotherm model, which are provided in Figure 3. To calculate the CO_2 working capacity of this sorbent, the adsorption conditions are assumed to be 40°C and P_{CO2} = 0.15 bar, while the regeneration conditions are assumed to be 120°C and 0.81 bar (note that the CO_2 in the regenerator exhaust will be slightly diluted with desorbing moisture). Using the isotherms provided in Figure 3, the CO_2 loading under adsorption conditions is approximately 10.5 g CO_2/100 g fresh sorbent, while the CO_2 loading under the regeneration conditions is approximately 3.5 g CO_2/100 g fresh sorbent; the CO_2 working capacity is approximately 7 g CO_2/100 g fresh sorbent, which is nearly an 80 percent improvement versus the working capacity of aqueous monoethanolamine provided in the 2010 version DOE Baseline Report.

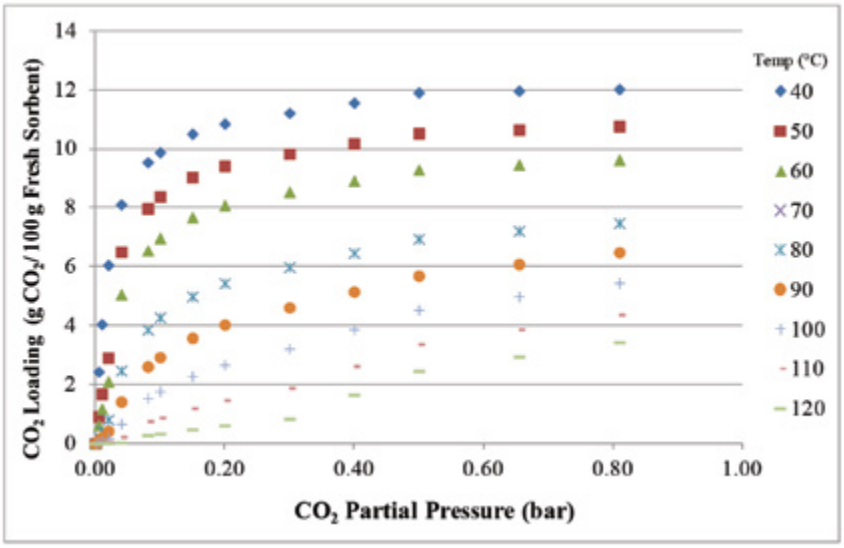

Figure 3: Sorbent Isotherms

Sorbent Contaminant Resistance – Amines will react with sulfur dioxide (SO_2) in the flue gas. The selected sorbent will react with SO_2 and, as a result, the overall working capacity for CO_2 will decrease. However, this is a reversible reaction and the sorbent can be regenerated to recover CO_2 capture effectiveness.

Sorbent Attrition and Thermal/Hydrothermal Stability – Based on laboratory testing, the selected sorbent is expected to have low mechanical attrition. Comparisons to fluid catalytic cracking (FCC) catalyst attrition are favorable. The moisture uptake on the sorbent is important because it results in an increase in the regenerator heat duty due to the enthalpy of vaporization/condensation (assuming that the H_2O is physically adsorbed). In addition, in the regenerator, the released H_2O will necessitate the addition of condensers to separate the H_2O from the CO_2 exhaust. This sorbent demonstrates a small (≈0.9 g H_2O/100 g fresh sorbent under expected 1-MWe pilot operating conditions) H_2O working capacity.

Flue Gas Pretreatment Requirements – A secondary scrubber has been incorporated into the pilot design to reduce the flue gas SO_2. An assessment of the cost-benefit of scrubbing SO_2 versus regenerating the sorbent that has reacted with SO_2 to recover CO_2 capture effectiveness must be conducted to determine the commercial process design and operating details.

Sorbent Make-Up Requirements – Current estimates used in cost projections are to replace the sorbent nominally once per year. Further testing is required, including pilot testing to refine the make-up requirements.

Waste Streams Generated – Waste streams will include spent sorbent, flue gas scrubber blow-down, and flue gas cooler condensate.

Process Design Concept – A simple schematic of the design of the 1-MWe pilot being designed and constructed is provided in Figure 4. In the schematic, three fluidized beds are shown for adsorption, but the actual number of fluidized beds must be selected based on the sorbent. However, while the number of beds may change, it is important to remember that the heat transfer surface area is based on the sensible heat that must be removed, the enthalpy of adsorption, and the amount of CO_2 being adsorbed. The regenerator is a single fluidized bed. Only one stage is necessary because the goal of the regenerator is to generate high partial pressure CO_2 and no stripping steam is used.

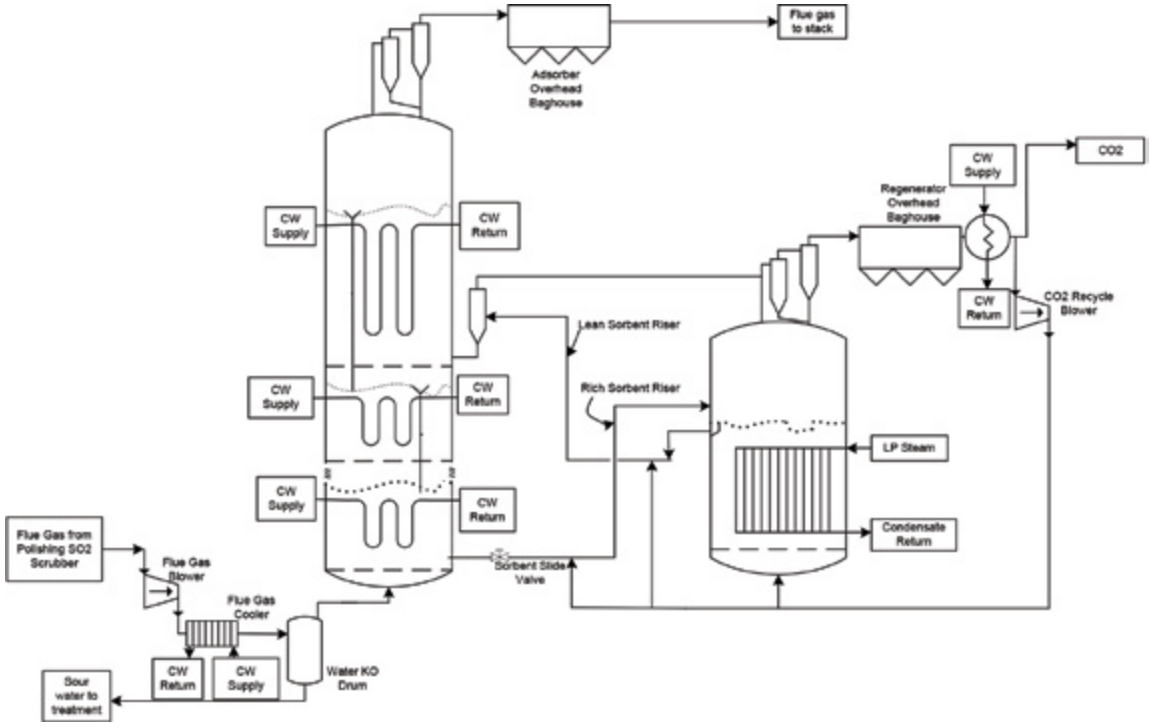

Figure 4: Schematic of ADA's CO_2 Capture Temperature Swing Adsorption System

Proposed Module Design – The CO_2 capture module will be located downstream of the plant's existing SO_2 scrubber. The gas stream from which CO_2 will be removed is representative of that from a coal-fired power plant with nominal conditions of P_{CO2} = 0.13 bar and T = 55°C. The adsorber is designed to operate isothermally at 40°C. The exhaust pressure for regeneration is approximately ambient pressure. The minimum superficial velocity of the flue gas will be limited to 1.2 m/s (4.0 ft/s) to minimize the number and footprint of reactors, and thus capital costs. Pneumatic conveying will be utilized for all required material conveying to increase reliability, decrease O&M costs, and increase technology acceptance. Because the sorbent and flue gas are contacted in a system that approaches counter-current flow, CO_2 working capacity can be maximized. In addition, the heat transfer has been optimized through the use of bubbling fluidized beds. The optimal mixing that is characteristic of bubbling fluidized beds also translates into effective gas/solids contacting. The design of the system employed established methods and principles used for gas-solid systems, including gas distribution, in-bed heat transfer, risers, standpipes, cyclones, and diplegs. Large-scale, two-stage fluidized beds have been used commercially for FCC processes. However, not all aspects of the design are commercially available. Wherever necessary, novel and innovative components, such as the trays used to support the fluidized beds, have been developed.

technology advantages

- Compared to an aqueous amine system:
  - No corrosion inhibitors are required.
  - Less water waste will be generated.
  - No process make-up water will be required.
  - Amine volatilization will be reduced or eliminated (indicated during laboratory testing and will be evaluated during 1-MWe pilot testing).
- Reduction in the regeneration energy requirements by minimizing heat input:
  - The heat capacity of solids is nominally 25 percent of liquids (heat recovery for solids has not been developed for this application).
  - The latent heat of vaporization is minimized (no liquid solvent is involved).
- High sorbent CO_2 capacities have been demonstrated (lab-scale).
- Fundamental sorbent chemistry is well-know (e.g., amine).
- Components of process equipment are mature (e.g., circulating fluidized bed).

R&D challenges

- Similar to aqueous amines, long-term stability of sorbents when exposed to flue gas is of concern. Laboratory tests indicate sorbent performance can be recovered using a secondary system.
- Availability of sorbents including the number of suppliers. Many developers are currently materials and several show promise in laboratory testing. Multiple suppliers are expected to emerge with a commercial market.
- Ability to scale-up sorbent manufacturing without impacting performance. Although the specific recipe is unique, the current sorbent is produced using a commercial-scale ion exchange resin manufacturing process. Larger-scale production lines should not be an issue for this material. Cost controls will be realized by developing a manufacturing process specific to this recipe.
- Ability to design a process that can control sorbent temperatures and counteract changes resulting from the heat of reaction, potential erosion, and/or corrosion of process equipment.

results to date/accomplishments

- Selected supported amines as the sorbent family for the 1-MW pilot. Selected an ion exchange resin with optimal physical and chemical characteristics for this application.
- Selected a staged fluidized bed for the adsorber design and a single fluidized bed for the regenerator design.
- Completed a 550-MWe conceptual design.
- 1-MWe pilot plant detailed engineering design complete.
- Onsite construction activities, including installation of the steam line for regeneration heat, have begun.
- Construction activities for the pilot have begun. The pilot will be built as several modules and moved to the host site. Fabrication of major vessels is complete and erection of the structural steel modules is underway.
- All major equipment and instrumentation is procured, sorbent has been manufactured, and quality testing of the major vessels is underway.

next steps

- Complete pilot module construction and ship to host site.
- Complete pilot foundations and all other required host site preparations.
- Complete field installation of modules and interconnects.
- Process sorbent to conform to specifications of process design.
- Complete operating, commissioning/start-up, and testing procedures.
- Demonstrate pilot plant operation.
- Complete techno-economic assessment of technology.

available reports/technical papers/presentations

Starns, T.; Sjostrom, S.; Krutka, H.; Wilson, C.; and Ivie, M., "Solid Sorbents as a Retrofit CO_2 Capture Technology: Update on 1 MWe Pilot Progress," presented at the MEGA Conference, Baltimore, MD, August 2012.

Krutka, H.; Starns, T.; and Sjostrom, S., "Solid Sorbents as a Retrofit CO_2 Capture Technology: 1 MW Pilot Design," papers #527, Air & Waste Management Association Annual Conference, San Antonio, TX, June, 2012.

Krutka, H.; Sjostrom, S.; Krutka, H.; Starns, T.; Dillon, M.; and Silverman, R., "Post-Combustion CO_2 Capture Using Solid Sorbents: 1 MWe Pilot Evaluation," Energy Procedia, 2012, accepted.

Sjostrom, S., "Evaluation of Solid Sorbents as a Retrofit Technology for CO_2 Capture," presented at the 2012 NETL CO_2 Capture Technology Meeting, Pittsburgh, Pennsylvania, July 2012. *http://www.netl.doe.gov/publications/proceedings/12/co2capture/presentations/2-Tuesday/2-Travis%20Starns-ADA.pdf*.

Sjostrom, S., "Evaluation of Solid Sorbents as a Retrofit Technology for CO_2 Capture," presented at the 2011 NETL CO_2 Capture Technology Meeting, Pittsburgh, Pennsylvania, August 2011. *http://www.netl.doe.gov/publications/proceedings/11/co2capture/presentations/1-Monday/22Aug11-Starns-ADAES-Solid%20Sorbents%20Retrofit.pdf*.

Sjostrom, S.; Krutka, H.; Starns, T.; and Campbell, T., "Pilot Test Results of Post-Combustion CO_2 Capture Using Solid Sorbents," Energy Procedia, 2011, 4, 1584-1592.

Sjostrom, S., and Krutka, H., "Evaluation of Solid Sorbents as a Retrofit Technology for CO_2 Capture," Fuel, 2010, 89, 1298-1306.

Sjostrom, S., "Evaluation of Solid Sorbents as a Retrofit Technology for CO_2 Capture from Coal-Fired Power Plants," presented at the 2010 NETL CO_2 Capture Technology Meeting, Pittsburgh, Pennsylvania, September 2010. *http://www.netl.doe.gov/publications/proceedings/10/co2capture/presentations/thursday/Sharon%20Sjostrom%20-%20ADA%20Environmental%20Solutions.pdf*.

Sjostrom, S.; Krutka, H.; Campbell, T.; and Starns, T., "Solid Sorbents as a Retrofit CO_2 Capture Technology: Results from Field Testing," presented at the Power Plant Air Pollutant Control "MEGA" Symposium, Baltimore, Maryland, August 30 – September 2, 2010.

Sjostrom, S.; Campbell, T.; Krutka, H.; and Starns, T., "Solid Sorbents as a Retrofit CO_2 Capture Technology: Results from Field Testing," Paper #2010-A-131 submitted for presentation at the Power Plant Air Pollutant Control "MEGA" Symposium, Baltimore, Maryland, August 30 – September 2, 2010.

Martin, C.; Sjostrom, S.; Krutka, H.; Richard, M.; and Cameron, D., Topical Report 1, 2 and 3: Technology Survey, Screening, and Final Selection, Reporting Period: October 1, 2008–Janary 31, 2010 for U.S. Department of Energy Contract No. DE-NT0005649, July 2010.

Sjostrom, S., and Krutka, H., "Evaluation of solid sorbents as a retrofit technology for CO_2 capture," Fuel, Volume 89, Issue 6, Advanced Fossil Energy Utilization, June 2010, Pages 1298-1306. *http://www.sciencedirect.com/science/article/B6V3B-4XVH-HK9-1/2/71d79dcdd8ea282606d7e9c5c8f862cb*.

Sjostrom, S.; Campbell, T.; Krutka, H.; and Starns, T., "Post-combustion CO_2 Control Using Solid Sorbents: Results from 1 kW Pilot Tests," presented at the Ninth Annual Conference on Carbon Capture & Sequestration, May 2010.

Sjostrom, S.; Campbell, T.; Krutka, H.; and O'Palko, A., "Solid Sorbents as a Retrofit CO_2 Capture Technology: Results from Pre-Pilot Field Testing," presented at the Air Quality VII Conference, Arlington, Virginia, October 2009.

Sjostrom, S., "Evaluation of Solid Sorbents as a Retrofit Technology for CO_2 Capture from Coal-Fired Power Plants – Project Overview," presented at the Annual NETL CO_2 Capture Technology for Existing Plants R&D Meeting, Pittsburgh, Pennsylvania, March 2009. *http://www.netl.doe.gov/publications/proceedings/09/CO2/pdfs/5649%20ADA-ES%20sorbents%20%28Sjostrom%29%20mar09.pdf*.

Krutka, H.; Sjostrom, S.; and Bustard, C.J., "Results from Lab and Field Testing of Novel CO_2 Sorbents for Existing Coal-Fired Power Plants," Power Plant Air Pollutant Control "Mega" Symposium, Baltimore, Maryland, August 2008.

Summary of Post-Combustion CO_2 Capture Technologies for Existing Coal-Fired Power Plants, Air & Waste Management Association Annual Conference, paper #808, Portland, OR, June 2008.

RAPID TEMPERATURE SWING ADSORPTION USING POLYMERIC/SUPPORTED AMINE HOLLOW FIBER MATERIALS

primary project goals

The Georgia Institute of Technology is developing a rapid temperature swing adsorption (RTSA) process and will evaluate the cost and performance benefits of this novel hybrid capture approach via bench-scale testing of a module containing hollow fibers, which are loaded with supported adsorbents and surround an impermeable lumen layer that allows for cooling and heating.

technical goals

- Produce polymeric hollow fiber contactors loaded with amine adsorbent particles for post-combustion carbon dioxide (CO_2) capture.
- Develop a computational model of the fiber module and validate it in parallel with the experimental program.

technical content

Supported amine adsorbents have many promising properties with regard to CO_2 capture from post-combustion flue gas. However, most previous studies of supported amine materials focus only on CO_2 adsorption, ignoring desorption. In addition, essentially all published studies describe the use of supported amine materials in fixed beds. This process configuration is difficult to use at practical scales due to heat integration challenges. This is especially important for supported amines, whose heats of adsorption are among the highest of known CO_2 adsorbents (50 to 80 kJ/mol). Thus, practical process designs for amine sorbents must include effective heat transfer.

Recently, the use of novel polymeric hollow fiber contactors loaded with CO_2 adsorbents has been introduced as a scalable process configuration for CO_2 capture. In this approach, polymeric hollow fibers, similar to those used for commercial-scale membrane gas separation, are prepared and loaded with large volumes of solid CO_2 adsorbing materials. However, unlike those used for membrane applications, these hollow fibers have several unique aspects. First, high volumes of adsorbent materials are included, typically 60 to 75 percent by volume. Second, the polymeric phase is designed to have many large voids, allowing rapid mass transfer to the sorbent particles. Third, a dense lumen layer is installed in the fiber bore to largely shutdown transport from the shell side of the fibers to the bore. This design yields fibrous structures that are ideally suited for application as combined sorption and heat transfer modules in an RTSA process. Total cycle times are expected to be on the order of two to three minutes.

technology maturity:

Bench-Scale, Simulated Flue Gas

project focus:

Rapid-Temperature Swing Adsorption

participant:

The Georgia Institute of Technology

project number:

FE0007804

NETL project manager:

Barbara Carney
barbara.carney@netl.doe.gov

principal investigator:

Christopher W. Jones
Georgia Institute of Technology
christopher.jones@chbe.gatech.edu

partners:

Trimeric Corporation
Algenol Biofuels
Southern Company Services
GE Energy

performance period:

10/1/11 – 9/30/14

In the amine-hollow fiber RTSA process, flue gases flow over the shell of the fibers while cooling water flows through the bore. Given the small diameter of the fibers, the fibers and adsorbents can be maintained in nearly isothermal conditions, with the cooling fluid providing an effective reservoir for heat of adsorption (Figure 1). At the appropriate time, the flue gas can be re-routed to another bed and the fibers can be switched to desorption mode by passing hot water through the fiber bore, driving off the CO_2.

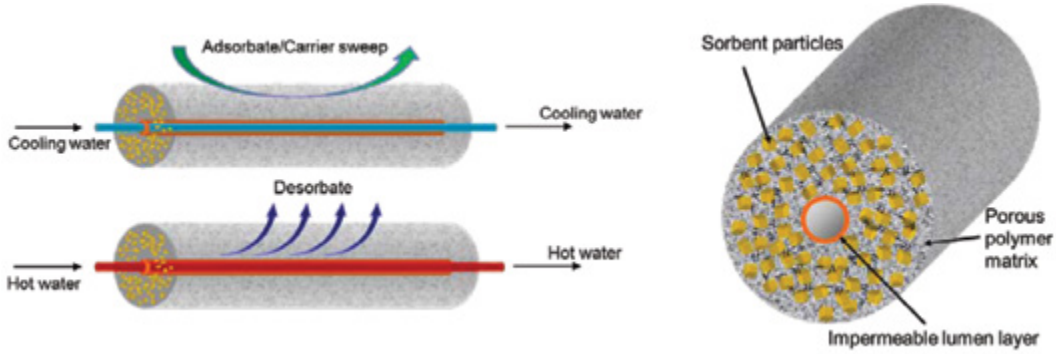

Figure 1: Sorption (top) and Desorption (bottom) Modes in Hollow Fiber Sorbents

This RTSA approach was recently demonstrated using cellulose acetate fibers and zeolite 13X as the adsorbent in the fibers. Zeolite 13X is not an ideal sorbent for wet post-combustion CO_2 capture streams, but supported amines may be well suited for the task.

The hollow fiber architecture has three key attributes: (1) it provides the adsorption surface area needed to handle large volumes of flue gas; (2) it enables efficient heat transfer needed to handle the high heat of adsorption of supported amines; and (3) it is readily scalable given the current commercial capability to produce large surface area hollow fibers on an industrial scale.

The RTSA process based on hollow fibers containing supported amine adsorbents represents a novel new process configuration for post-combustion CO_2 capture. In a commercial process, multiple hollow fiber modules would be used, and modules would cycle synergistically between adsorption and desorption modes in a continuous process, as shown in Figure 2.

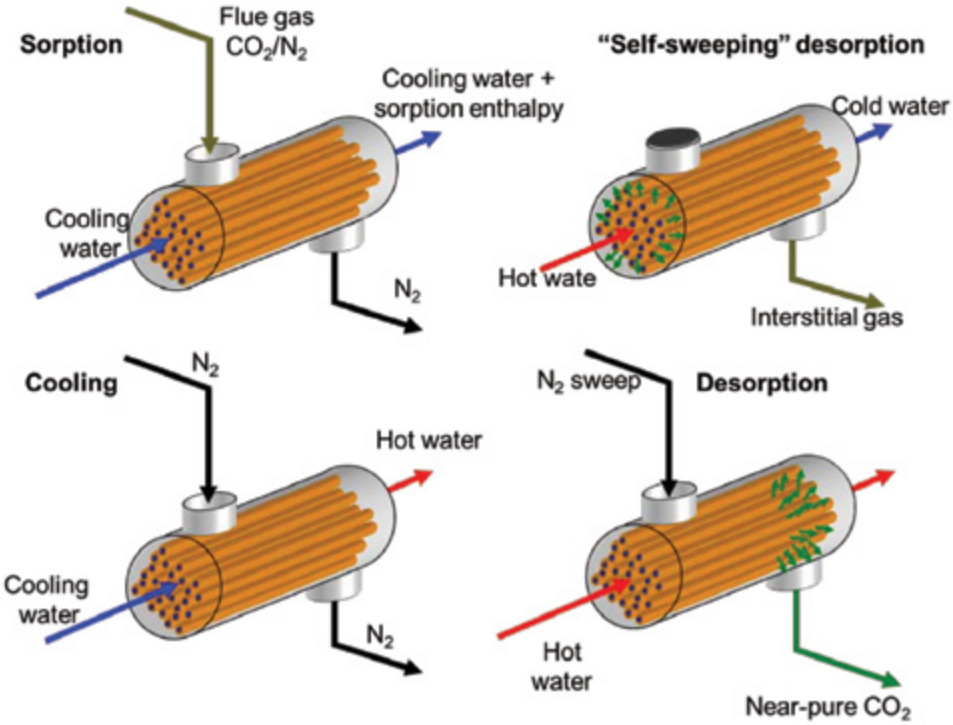

Figure 2: Potential RTSA Process Configuration

TABLE 1: ADSORPTION-BASED POST-COMBUSTION CO_2/N_2 SEPARATIONS

	Units	Current R&D Value	Target R&D Value
Sorbent			
True Density @ STP	kg/m^3	1100	1100
Bulk Density	kg/m^3	1100	1100
Average Particle Diameter	mm	1.0	1.0
Particle Void Fraction	m^3/m^3	0.4-0.5	0.28-0.3
Packing Density	m^3/m^3	0.44	0.4-0.5
Solid Heat Capacity @ STP	m^2/m^3	1800	3000
Crush Strength	kJ/kg-K	1.140	1.140
Manufacturing Cost for Sorbent	kg_f	Unknown	Unknown
Manufacturing Cost for Fiber Module (includes hardware, fibers, sorbent)	$/kg	Unknown	$10/m², or $25-$35/kg
Adsorption			
Pressure	bar	0.13	0.13
Temperature	°C	35	35
Equilibrium Loading	g mol CO_2/kg-sorbent	0.9-1.1	1.0-1.5
Heat of Adsorption	kJ/mol CO_2	55-65	55-65
Desorption			
Pressure	bar	1.0	5.5
Temperature	°C	120	90
Equilibrium Loading	g mol CO_2/kg-sorbent	0.1	0.1
Heat of Desorption	kJ/mol CO_2	55	55-65
Proposed Module Design		*(for equipment developers)*	
Flow Arrangement/Operation	-	Co-current shell and tube	Co-current shell and tube
Flue Gas Flowrate	kg/hr	0.005 (lab), ≈2,900 (full scale, per module)	0.5 (lab), ≈2,900 full scale, per module)
CO_2 Recovery, Purity, and Pressure	% / % / bar	100%R, 42 mol%, 1 bar (0.42 bar partial pressure)	90%R, 95 mol%, at 1 bar or 80 mol% at 5.5 bar
Adsorber Pressure Drop	bar	< 0.1	< 0.15
Estimated Absorber/Stripper Cost of Manufacturing and Installation	$ / kg/hr	N/A	N/A

Definitions:

STP – Standard Temperature and Pressure (15°C, 1 atm).

Sorbent – Adsorbate-free (i.e., CO_2-free) and dry material as used in adsorption/desorption cycle.

Fiber Bundle – collection of fibers to be used in a single module. Each fiber contains 50-55 percent wt. solid sorbent, and 30 to 50 percent of the solid sorbent is amine.

Manufacturing Cost for Sorbent – "Current" is market price of material, if applicable; "Target" is estimated manufacturing cost for new materials, or the estimated cost of bulk manufacturing for existing materials.

Adsorption – The conditions of interest for adsorption are those that prevail at maximum sorbent loading, which typically occurs at the bottom of the adsorption column. These may be assumed to be 1 atm total flue-gas pressure (corresponding to a CO_2 partial pressure of 0.13 bar) and 40°C; however, measured data at other conditions are preferable to estimated data.

Desorption – The conditions of interest for desorption are those that prevail at minimum sorbent loading, which typically occurs at the bottom of the desorption column. Operating pressure and temperature for the desorber/stripper are process-dependent. Measured data at other conditions are preferable to estimated data.

Pressure – The pressure of CO_2 in equilibrium with the sorbent. If the vapor phase is pure CO_2, this is the total pressure; if it is a mixture of gases, this is the partial pressure of CO_2. Note that for a typical PC power plant, the total pressure of the flue gas is about 1 atm and the concentration of CO_2 is about 13.2 percent. Therefore, the partial pressure of CO_2 is roughly 0.132 atm or 0.130 bar.

Packing Density – Ratio of the active sorbent area to the bulk sorbent volume.

Loading – The basis for CO_2 loadings is mass of dry, adsorbate-free sorbent.

Flow Arrangement/Operation – Gas-solid module designs include fixed, fluidized, and moving bed, which result in either continuous, cyclic, or semi-regenerative operation.

Estimated Cost – Basis is kg/hr of CO_2 in CO_2-rich product gas; assuming targets are met.

Other Parameter Descriptions:

Chemical/Physical Sorbent Mechanism – The underlying mechanism is primary and secondary amines reacting with CO_2 to produce carbamates or (bi)carbonates, depending on the nature of the amines, amine loading, and humidity level. Under most conditions, a mixture of species is formed on the adsorbent surface.

Sorbent Contaminant Resistance – Thus far, the solid supported amines developed for this project have displayed excellent oxidative stability, stability in humid conditions (5% RH – 90% RH), and resistance to nitric oxide (NO). The active amine fillers are poisoned by high concentrations of sulfur oxide (SO_x; 200 parts per million [ppm]), and extensive sulfur removal is needed.

Sorbent Attrition and Thermal/Hydrothermal Stability – Due to the sorbents being "protected" within the walls of the hollow fiber sorbents, the Georgia Institute of Technology has yet to experience any mechanical issues (such as attrition) in their studies. The fibers themselves are quite temperature-resistant, but the amines have a realistic upper temperature limit of ≈130°C. The fibers can restructure upon extended exposure to high humidity at high temperature. However, the water sorption capacity of the fibers is much higher than the CO_2 capacity, so CO_2 breakthrough occurs while the majority of the fiber is still dry. Therefore, degradation due to humidity can be controlled.

Flue Gas Pretreatment Requirements – Current analysis indicates that flue gas cooling to approximately 35°C is required for low-cost CO_2 capture. Experimental work suggests that partial dehydration of the flue gas may prolong fiber lifetimes (i.e., 90% RH vs. 100% RH). Finally, further wet flue gas desulfurization (FGD) may be required for additional SO_x removal for optimum long-term performance of the amines.

Sorbent Make-Up Requirements – Analyses investigating the amine loss mechanism and rate are ongoing.

Waste Streams Generated – Spent fiber sorbents represent the only process waste stream. Currently, the fibers are assumed to last three years before replacement is required.

Process Design Concept – Flowsheet/block flow diagram:

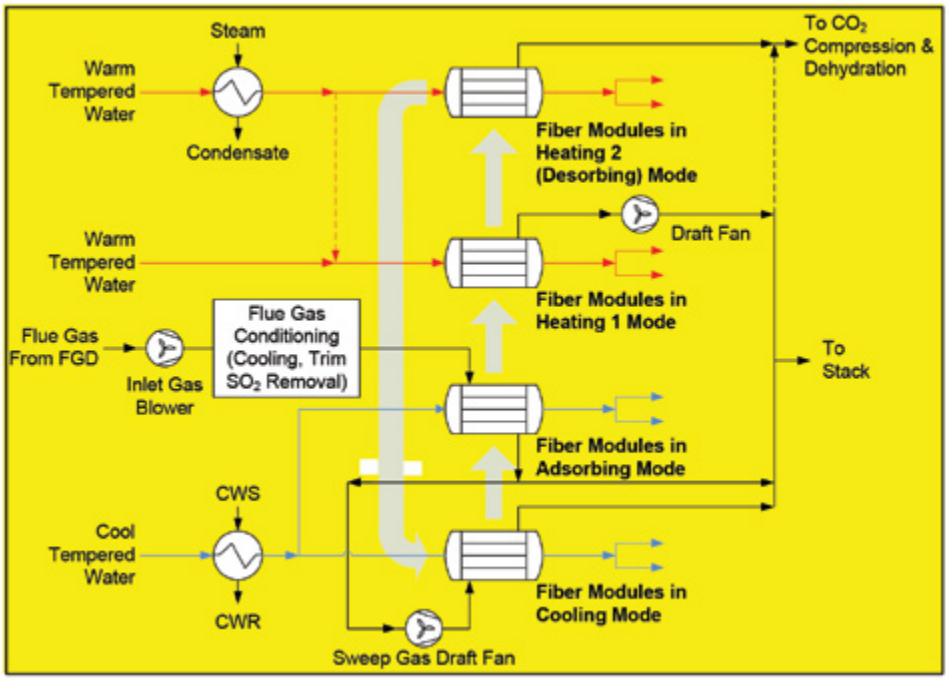

Figure 3: Flowsheet/block flow diagram

Proposed Module Design – Note the module location, as well as the pressure, temperature, and composition of the gas entering the module. Unless noted, flue gas feed pressure is 1.014 bara, temperature is 57°C, and composition leaving the flue gas desulfurization (FGD) unit (wet basis) should be assumed:

Composition (% vol)					Composition (ppmv)	
CO_2	H_2O	N_2	O_2	Ar	SO_x	NO_x
13.17	17.25	66.44	2.34	0.8	42	74

Several shell-and-tube hollow fiber sorbent modules are being considered. In this arrangement, the flue gas is sent through a valve manifold "cascade" that introduces the flue gas sequentially into the "rack" of modules. A similar approach is envisioned for water that will be valved and pumped through the bore side of the hollow fiber sorbents to enable rapid heating and cooling, thus driving down system footprint and increasing the overall sorbent productivity. The flue gas will enter through a gas diffuser ring at the "top" of the shell side of the module. The gas will proceed through the shell side until CO_2 breaks through the "bottom" of the module; the tightly packed hollow fibers prevent gas bypass. Water will enter the bore side of the fibers through a header system and will flow in the same directions as the flue gas (co-current design). The water eluent is segregated based on temperature and is recycled throughout the process in a tempered water system, which facilitates intra-process heat recovery.

technology advantages

- Deleterious thermal effects typically associated with packed-bed sorption can be mitigated and higher sorption efficiencies can be achieved by utilizing the hollow fiber morphology to supply cooling agents in the bore of the fiber during adsorption.
- The thin porous walls of the fiber sorbent allow for rapid heat and mass transfer equilibration, thereby allowing for more rapid thermal cycles and thus reducing device volume.
- Pressure drops through these beds will be correspondingly lower than those of packed or fluidized solid sorbent beds, which will reduce draft fan costs.
- Heat transfer fluids in the bore of the fibers can be as simple as hot water and cold water, providing an environmentally friendly overall process.
- Rapid heat transfer enables potential recovery of heat of adsorption and reuse of sensible heat of the bed. This affords heat integration both within the capture process and may facilitate heat integration with the boiler feed water preheat. This can dramatically reduce the overall parasitic thermal load of the RTSA process.

R&D challenges

- High heat of adsorption, with heat management improved by contactor design.
- Deactivation of sorbents upon exposure to oxygen, SO_x, and exposure to saturated humidity and temperature.
- Low-working capacity in more conventional contactors.

results to date/accomplishments

- Fibers and amine/silica sorbents synthesized.
- New, scalable amine/sorbent/fiber synthesis protocol developed.
- Construction and operation of RTSA Testing Station 1 for CO_2 uptake experiments and pressure-drop measurements.
- First demonstration of CO_2 capture from amine containing hollow fibers in small modules.
- Demonstration of resistance to O_2 and NO under conditions typical of flue gas.
- Models of adsorption-heating-desorption-cooling cycle developed.
- Preliminary techno-economic analysis conducted.

next steps

- Construct bench-scale modules (0.5” x 3’ 150 fibers) for RTSA Testing Station 2 for heat transfer measurements.
- Model validation against bench-scale experiments.
- Optimize cycle parameters to minimize cost per ton of CO_2 captured.
- Optimize sorbent, fiber, and module parameters to maximize heat recovery.
- Refine techno-economic model with experimental parameters.

available reports/technical papers/presentations

Realff, M, et al., “Rapid Temperature Swing Adsorption Using Polymer/Supported Amine Compostie Hollow Fibers,” presented at the 2012 NETL CO_2 Capture Technology Meeting, Pittsburgh, Pennsylvania, July 2012. *http://www.netl.doe.gov/publications/proceedings/12/co2capture/presentations/2-Tuesday/M%20Realff-GIT-RTSA.pdf*.

Lively, Ryan, “Hollow fiber sorbents for post-combustion CO_2 capture,” dissertation, Georgia Institute of Technology, January 2011. *http://smartech.gatech.edu/handle/1853/43758*.

Labreche, Y, et al., “Post-spinning infusion of poly(ethyleneimine) into polymer/silica hollow fiber sorbents for carbon dioxide capture,” Chemical Engineering Journal, Volume 221, 1 April 2013, Pages 166–175 . *http://www.sciencedirect.com/science/article/pii/S1385894713001320*.

LOW-COST HIGH-CAPACITY REGENERABLE SORBENT FOR CARBON DIOXIDE CAPTURE FROM EXISTING COAL-FIRED POWER PLANTS

primary project goals

TDA Research, Inc. (TDA) is developing a low-cost, high-capacity carbon dioxide (CO_2) adsorbent to demonstrate its technical and economic viability through sorbent evaluation and optimization, development of sorbent production techniques, and bench-scale testing of the process using actual flue gas.

technical goals

- Optimize chemical composition.
- Optimize physical properties and mechanical integrity of the sorbent to meet the specific requirements of the process.
- Identify optimum operating conditions and process parameters for design calculations.
- Assess the economic viability of the new carbon capture process.

technical content

TDA is developing a low-cost, high-capacity CO_2 adsorbent and demonstrating its technical and economic viability for post-combustion CO_2 capture for existing pulverized coal (PC)-fired power plants. The sorbent consists of a carbon material modified with surface functional groups that remove CO_2 via physical adsorption. It exhibits a much higher affinity to adsorb CO_2 than nitrogen, water, or oxygen, enabling effective CO_2 separation from the flue gas. The sorbent binds CO_2 more strongly than common adsorbents, providing the chemical potential needed to remove the CO_2. However, because CO_2 does not form a true covalent bond with the surface sites, regeneration can be carried out with only a small energy input. The heat input to regenerate the sorbent is only 4.9 kcal/mol of CO_2 (Figure 1), which is much lower than that for chemical absorbents (e.g., 29.9 kcal/mol CO_2 for sodium carbonate) or amine-based solvents (e.g., 14.2 kcal/mol CO_2 for monoethanolamine [MEA]).

technology maturity:

Bench-Scale, Actual Flue Gas

project focus:

Low-Cost, High-Capacity Regenerable Sorbent

participant:

TDA Research, Inc.

project number:

FE0007580

NETL project manager:

Andrew O'Palko
andrew.opalko@netl.doe.gov

principal investigator:

Gokhan Alptekin
TDA Research
galptekin@tda.com

partners:

Babcock & Wilcox
Gas Technology Institute
University of California – Irvine

performance period:

10/1/11 – 9/30/14

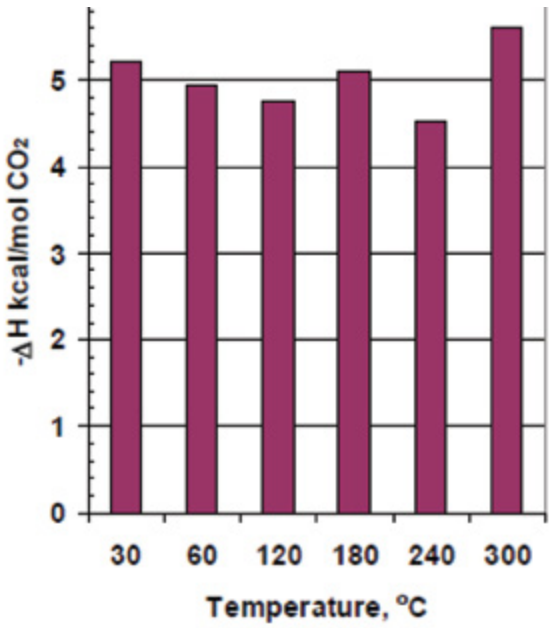

Figure 1: Heat of Adsorption Measurements (ΔH_{ads} = 4.9 ± 0.4 kcal/mol)

Initial sorbent testing under conditions simulating the environment downstream of a wet flue gas desulfurization unit showed stable CO_2 capacity for more than 220 cycles with no sign of degradation (Figure 2).

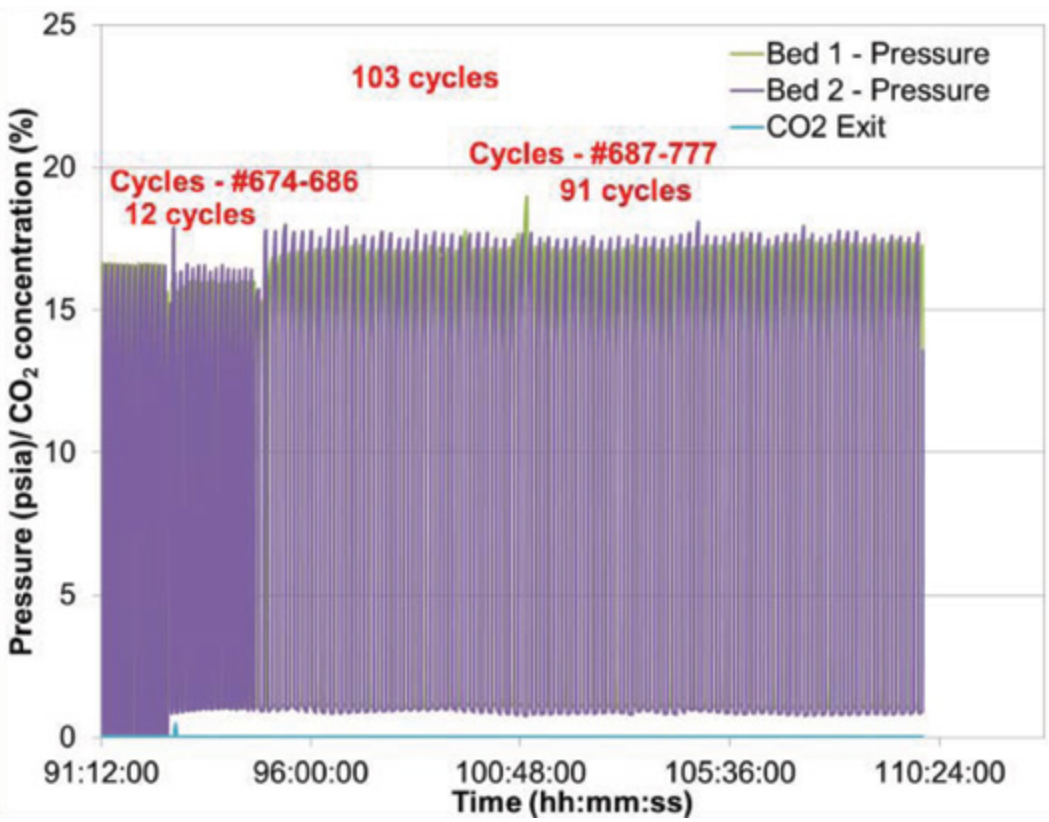

Figure 2: Capacity Testing Under Multiple VSA Cycles – Capacity Maintained Over 770 Cycles (T = 22°C; half-cycle time = 4-8 min; Pads= 16 psia; Pdes= 1 psia; simulated flue gas, 17 percent vol. CO_2, H_2O = 1.2 percent vol)

The presence of acid gases, such as sulfur dioxide (SO_2) and nitrogen oxide (NO_x), and water vapor up to 15 percent vol. caused no adverse effect on the CO_2 capacity (Figure 3)

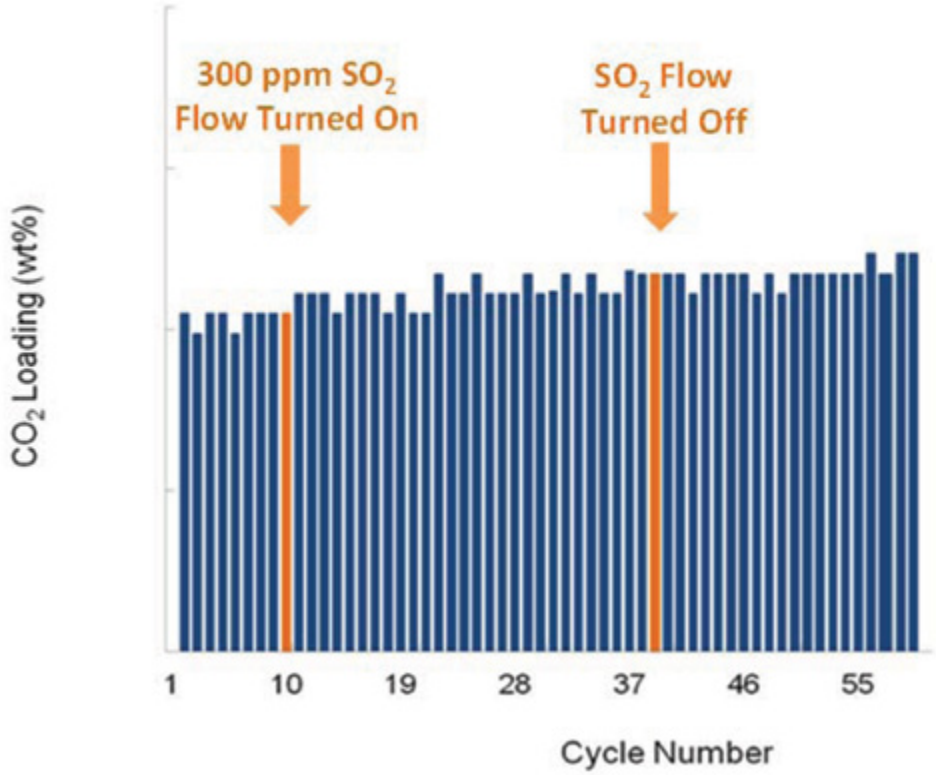

Figure 3: Capacity Analysis in Presence of SO_2 and Water (adsorption T = 62°C, 15.2 percent CO_2, 2.8 percentO_2, bal N_2, sat. with H_2O, 300 ppmv SO_2)

The regeneration of the sorbent and the recovery of CO_2 and its pressurization can then be achieved by several approaches, including temperature swing and vacuum swing. Figure 4 shows a schematic diagram of the process under temperature-swing operation.

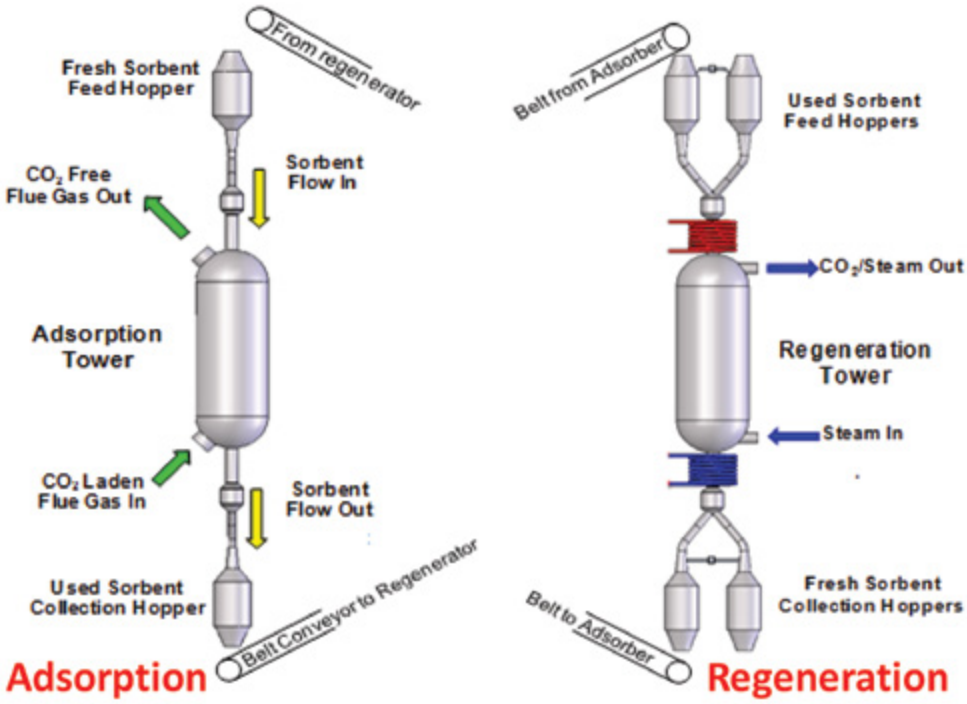

Figure 4: TSA Process Schematic

TABLE 1: ADSORPTION-BASED POST-COMBUSTION CO_2/N_2 SEPARATIONS

	Units	Current R&D Value	Target R&D Value
Sorbent			
True Density @ STP	kg/m^3		
Bulk Density	kg/m^3		
Average Particle Diameter	mm		
Particle Void Fraction	m^3/m^3		
Packing Density	m^2/m^3		
Solid Heat Capacity @ STP	kJ/kg-K	0.93	0.93
Crush Strength	kg_f		
Manufacturing Cost for Sorbent	$/kg		
Adsorption			
Pressure	bar	1.02	1.02
Temperature	°C	70	58
Equilibrium Loading	g mol CO_2/kg	0.3	0.4
Heat of Adsorption	kJ/mol CO_2	-20.5	-20.5
Desorption			
Pressure	bar	0.204	0.15 – 0.2
Temperature	°C	70	58
Equilibrium Loading	g mol CO_2/kg-sorbent		
Heat of Desorption	kJ/mol CO_2		
Proposed Module Design		*(for equipment developers)*	
Flow Arrangement/Operation	-		
Flue Gas Flowrate	kg/hr		
CO_2 Recovery, Purity, and Pressure	% / % / bar	96–97%	
Adsorber Pressure Drop	bar		
Estimated Absorber/Stripper Cost of Manufacturing and Installation	$ / kg/hr		

Definitions:

STP – Standard Temperature and Pressure (15°C, 1 atm).

Sorbent – Adsorbate-free (i.e., CO_2-free) and dry material as used in adsorption/desorption cycle.

Manufacturing Cost for Sorbent – "Current" is market price of material, if applicable; "Target" is estimated manufacturing cost for new materials, or the estimated cost of bulk manufacturing for existing materials.

Adsorption – The conditions of interest for adsorption are those that prevail at maximum sorbent loading, which typically occurs at the bottom of the adsorption column. These may be assumed to be 1 atm total flue-gas pressure (corresponding to a CO_2 partial pressure of 0.13 bar) and 40°C; however, measured data at other conditions are preferable to estimated data.

Desorption – The conditions of interest for desorption are those that prevail at minimum sorbent loading, which typically occurs at the bottom of the desorption column. Operating pressure and temperature for the desorber/stripper are process-dependent. Measured data at other conditions are preferable to estimated data.

Pressure – The pressure of CO_2 in equilibrium with the sorbent. If the vapor phase is pure CO_2, this is the total pressure; if it is a mixture of gases, this is the partial pressure of CO_2. Note that for a typical PC power plant, the total pressure of the flue gas is about 1 atm and the concentration of CO_2 is about 13.2 percent. Therefore, the partial pressure of CO_2 is roughly 0.132 atm or 0.130 bar.

Packing Density – Ratio of the active sorbent area to the bulk sorbent volume.

Loading – The basis for CO_2 loadings is mass of dry, adsorbate-free sorbent.

Flow Arrangement/Operation – Gas-solid module designs include fixed, fluidized, and moving bed, which result in either continuous, cyclic, or semi-regenerative operation.

Estimated Cost – Basis is kg/hr of CO_2 in CO_2-rich product gas; assuming targets are met.

technology advantages

- The sorbent does competitively adsorb CO_2 over water.
- The heat of adsorption of CO_2 is low (much lower than amine-based solvents; comparable to that of Selexol).
- The net energy loss in sorbent regeneration is expected to be lower than amine scrubbers.

R&D challenges

- Mechanical integrity of the sorbent material at the conditions of use must be demonstrated.
- The gas-solid contactor design must be proven with full capabilities to be demonstrated.

results to date/accomplishments

- The evaluation and optimization of sorbent chemical composition has been completed.
- A low-fidelity process design and system optimization to provide a basis for future experimental and system design work has been developed.

next steps

- Process design and system analysis.
- Long-term sorbent cycling.
- Design of a breadboard prototype test unit.
- High-fidelity process optimization and design.
- Fabrication of the prototype test unit.
- Concept demonstration.
- System analysis, economic evaluation, and environmental health and safety assessment.

available reports/technical papers/presentations

Alptekin, G., Jayaraman, A., Copeland, R., "Post-Combustion CO2 Capture System for Existing Coal-fired Power Plant," presented at the 2012 NETL CO2 Capture Technology Meeting, Pittsburgh, Pennsylvania, July 2012. *http://www.netl.doe.gov/publications/proceedings/12/co2capture/presentations/2-Tuesday/G%20Alptekin-TDA%20Research-Sorbent.pdf*.

Power Plant Air Pollutant Control "MEGA" Symposium, August 20-23, 2012, Baltimore, Maryland.

EVALUATION OF CARBON DIOXIDE CAPTURE FROM EXISTING COAL-FIRED PLANTS BY HYBRID SORPTION USING SOLID SORBENTS

primary project goals

The University of North Dakota (UND) is developing solid sorbent technology to decrease capture costs and energy use via bench-scale testing of a system that utilizes novel process chemistry, a low-cost method of heat management, and contactor conditions that minimize sorbent-carbon dioxide (CO_2) heat of reaction and promote fast CO_2 capture.

technical goals

- Combine existing technologies to create a new sorbent that will have a high CO_2 loading capacity and a process with a low regeneration energy penalty.
- Develop a process that will efficiently capture CO_2 from flue gas streams and regenerate it into a pure CO_2 stream with a lower operating cost than current methods.

technical content

UND is scaling-up and demonstrating a solid sorbent technology for CO_2 capture and separation from coal combustion-derived flue gas. The technology – Capture from Existing Coal-Fired Plants by Hybrid Sorption Using Solid Sorbents Capture (CACHYS™) – is a novel solid sorbent process based on the following principles:

- Reduction of energy for sorbent regeneration.
- Utilization of novel process chemistry.
- Contactor conditions that minimize sorbent-CO_2 heat of reaction and promote fast CO_2 capture.
- Low-cost method of heat management.

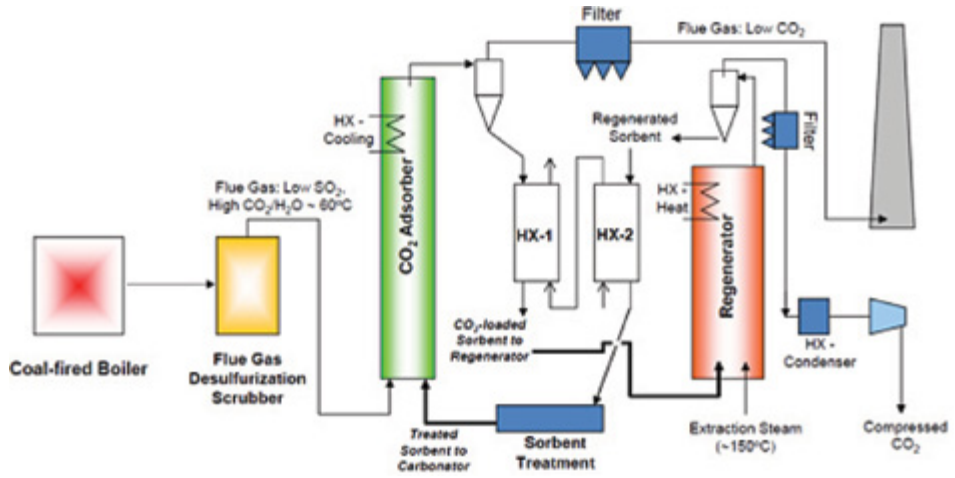

Figure 1: CACHYS™ Sorption Process

technology maturity:

Bench-Scale, Actual Flue Gas

project focus:

Solid Sorbent-Based CO_2 Capture

participant:

University of North Dakota

project number:

FE0007603

NETL project manager:

Andrew Jones
andrew.jones@netl.doe.gov

principal investigator:

Steven A. Benson
University of North Dakota
steve.benson@engr.und.edu

partners:

Industrial Commission of North Dakota
Envergex LLC
Barr Engineering
Solex Thermal Science Incorporated
ALLETE Incorporated
SaskPower

performance period:

10/1/11 – 9/30/14

Another key component of the technology is the use of a low-cost sorbent (consisting of active component, promoter, and support). UND is evaluating effective and cost-competitive sorbent formulations for CO_2 capture that have been identified in previous studies.

TABLE 1: ADSORPTION-BASED POST-COMBUSTION CO_2/N_2 SEPARATIONS

	Units	Current R&D Value	Target R&D Value
Sorbent			
True Density @ STP	kg/m^3	1,800 – 2,200	1,800 – 2,200
Bulk Density	kg/m^3		
Average Particle Diameter	mm	0.1 – 1	0.1 – 1
Particle Void Fraction	m^3/m^3		
Packing Density	m^2/m^3		
Solid Heat Capacity @ STP	kJ/kg-K	0.8 – 1.4	0.8 – 1.4
Crush Strength	kg_f		
Manufacturing Cost for Sorbent	$/kg		
Adsorption			
Pressure	bar	1 – 1.5	1 – 1.5
Temperature	°C	50 – 90	50 – 90
Equilibrium Loading	g mol CO_2/kg-sorbent	1.5	2
Heat of Adsorption	kJ/mol CO_2	125	80
Desorption			
Pressure	bar	1 – 7	1 – 7
Temperature	°C	120 – 170	120 – 170
Equilibrium Loading	g mol CO_2/kg	0.4	0.4
Heat of Desorption	kJ/mol CO_2		
Proposed Module Design		*(for equipment developers)*	
Flow Arrangement/Operation	-	Fluidized Bed	Fluidized Bed
Flue Gas Flowrate	kg/hr		
CO_2 Recovery, Purity, and Pressure	% / % / bar	90%, 95–99%,	
Adsorber Pressure Drop	bar		
Estimated Absorber/Stripper Cost of Manufacturing and Installation	$\frac{\$}{kg/hr}$		

Definitions:

STP – Standard Temperature and Pressure (15°C, 1 atm).

Sorbent – Adsorbate-free (i.e., CO_2-free) and dry material as used in adsorption/desorption cycle.

Manufacturing Cost for Sorbent – "Current" is market price of material, if applicable; "Target" is estimated manufacturing cost for new materials, or the estimated cost of bulk manufacturing for existing materials.

Adsorption – The conditions of interest for adsorption are those that prevail at maximum sorbent loading, which typically occurs at the bottom of the adsorption column. These may be assumed to be 1 atm total flue-gas pressure (corresponding to a CO_2 partial pressure of 0.13 bar) and 40°C; however, measured data at other conditions are preferable to estimated data.

Desorption – The conditions of interest for desorption are those that prevail at minimum sorbent loading, which typically occurs at the bottom of the desorption column. Operating pressure and temperature for the desorber/stripper are process-dependent. Measured data at other conditions are preferable to estimated data.

Pressure – The pressure of CO_2 in equilibrium with the sorbent. If the vapor phase is pure CO_2, this is the total pressure; if it is a mixture of gases, this is the partial pressure of CO_2. Note that for a typical pulverized coal (PC) power plant, the total pressure of the flue gas is about 1 atm and the concentration of CO_2 is about 13.2 percent. Therefore, the partial pressure of CO_2 is roughly 0.132 atm or 0.130 bar.

Packing Density – Ratio of the active sorbent area to the bulk sorbent volume.

Loading – The basis for CO_2 loadings is mass of dry, adsorbate-free sorbent.

Flow Arrangement/Operation – Gas-solid module designs include fixed, fluidized, and moving bed, which result in either continuous, cyclic, or semi-regenerative operation.

Estimated Cost – Basis is kg/hr of CO_2 in CO_2-rich product gas; assuming targets are met.

technology advantages

- Low heat of reaction observed.
- High sorbent capacity.
- Increased sorption kinetics.

R&D challenges

- Confirmation of energetic.
- Confirmation of sorbent capacity.
- Sorbent integrity.
- Sorbent handling.

results to date/accomplishments

- Performed initial heat and material balance calculations.
- Completed detailed initial process design.
- Conducted laboratory-scale sorbent performance tests; sorbent capacities ranged from 70 to 100 gm CO_2/kg sorbent, desorption energy values ranged from 30-80 kJ/mol CO_2.
- An initial technical and economic feasibility analysis of the process was conducted; calculated CO_2 capture costs were just above $36/ton.
- A detailed design of the bench-scale CACHYS™ adsorption and desorption system was developed.

next steps

- Bench-scale unit procurement and construction.
- Initial operation of the bench-scale unit.
- Bench-scale process testing.
- Final process assessment.

available reports/technical papers/presentations

Benson, S., et al., "Evaluation of CO_2 Capture from Existing Coal-fired Plants by Hybrid Sorption Using Solid Sorbents," presented at the 2012 NETL CO_2 Capture Technology Meeting, Pittsburgh, Pennsylvania, July 2012. *http://www.netl.doe.gov/File%20Library/Research/Coal/ewr/co2/evaluation-of-co2-capture-kickoff-nov2011.pdf*.

Preliminary Carbon Dioxide Capture Technical and Economic Feasibility Study - Topical Report [PDF-1MB] (Nov 2012).

Project Review Meeting Presentation [PDF-1.4MB] (Sep 2012). *http://www.netl.doe.gov/File%20Library/Research/Coal/ewr/co2/und-co2-capture-budget-period1.pdf*.

Evaluation of CO_2 Capture from Existing Coal-Fired Power Plants by Hybrid Sorption Using Solid Sorbents (CACHYS™) [PDF-459KB] Project kick off meeting presentation, November 21, 2011. *http://www.netl.doe.gov/File%20Library/Research/Coal/ewr/co2/und-co2-capture-budget-period1.pdf*.

BENCH-SCALE DEVELOPMENT AND TESTING OF A NOVEL ADSORPTION PROCESS FOR POST-COMBUSTION CO_2 CAPTURE

technology maturity:
Bench-Scale, Actual Flue Gas

project focus:
Novel Adsorption Process

participant:
InnoSepra, LLC

project number:
FE0007948

NETL project manager:
Elaine Everitt
elaine.everitt@netl.doe.gov

principal investigator:
Ravi Jain
InnoSepra
ravi.jain@innosepra.com

partners:
Adsorptech
New Mexico State University
Electric Power Research Institute (EPRI)
NRG Energy Inc
PNNL

performance period:
10/1/11 – 3/31/14

primary project goals

InnoSepra, LLC is developing a sorption-based technology using a combination of novel microporous materials and process cycles to determine the impacts of this unique combination on capture costs and performance via bench-scale testing of system components using actual coal-based flue gas.

technical goals

- Confirm the design basis for bench-scale testing based on lab-scale results and process modeling.
- Build and mechanically test the bench-scale unit in the lab.
- Test the bench-scale unit on an actual coal-based flue gas stream for a period of six to eight weeks.
- Develop capital cost, operating cost, and levelized cost of electricity (LCOE) for a commercial, 550-MW power plant.

technical content

InnoSepra is demonstrating the effectiveness of an innovative, adsorption-based carbon dioxide (CO_2) capture technology utilizing a combination of novel microporous materials and process cycles. The process utilizes physical sorbents with much lower heats of adsorption (around 200 kcal/kg, less than 25 percent of the total energy needed for amine-based systems) compared to competing processes. Lab-scale testing has produced greater than 99 percent CO_2 purity and greater than 90 percent CO_2 recovery from synthetic flue gas. Projections based on detailed engineering evaluations show that at commercial scale, the technology can reduce the power consumption for CO_2 capture by more than 40 percent, and reduce the capital cost for the CO_2 capture equipment by more than 60 percent; this results in a more than 40 percent reduction in the CO_2 capture cost compared to alternate technologies such as amines and chilled ammonia. The overall process schematic is shown in Figure 1.

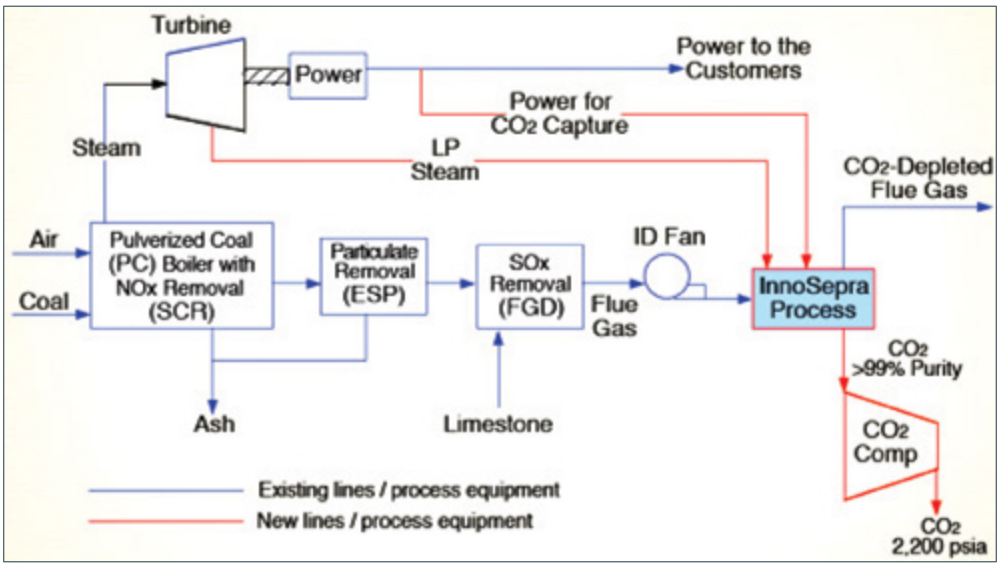

Figure 1: InnoSepra Capture Process Schematic

Figure 2 provides a schematic representation focusing on the CO_2 removal process. After the removal of moisture and sulfur oxides (SO_x) in a pretreatment system, the CO_2 is adsorbed, and high-purity CO_2 is produced during regeneration. The sorbents are heated and cooled using both direct and indirect cooling. Some of the heat of adsorption is removed during the adsorption process; the remaining heat is removed during the cooling steps. Regeneration heat is supplied via low-pressure steam, as well as by utilizing other process waste heat in the system.

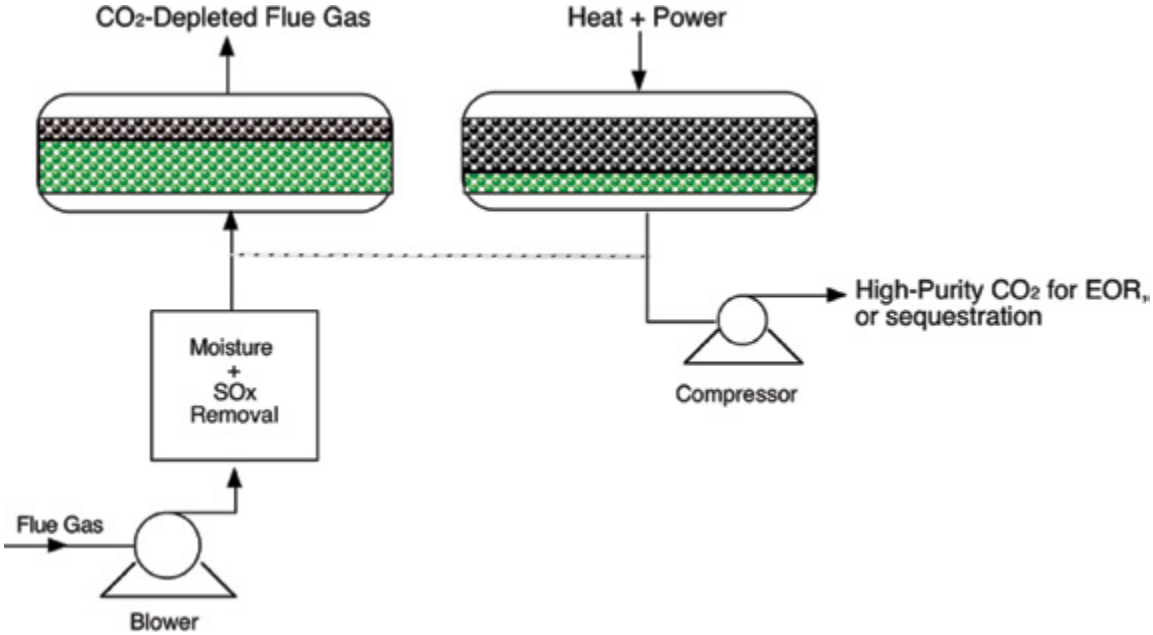

Figure 2: CO_2 Capture Process Schematic

Field-testing of the process at a one-ton-per-day scale in an actual power plant, as well as independent verification of process economics, will provide a firmer basis for techno-economic evaluation. This technology has the potential for earlier commercialization compared to some other technologies because most of the materials and unit operations used are commercial or near-commercial.

TABLE 1: ADSORPTION-BASED POST-COMBUSTION CO_2/N_2 SEPARATIONS

	Units	Current R&D Value	Target R&D Value
Sorbent			
True Density @ STP	kg/m^3	1,990	1,990
Bulk Density	kg/m^3	690	690
Average Particle Diameter	mm	1.5-3.0	0.5-1.5
Particle Void Fraction	m^3/m^3	0.45	0.45
Packing Density	m^2/m^3	1.79e8	1.79e8
Solid Heat Capacity @ STP	kJ/kg-K	0.96	0.96
Crush Strength	kg_f	2.9	2.9
Manufacturing Cost for Sorbent	$/kg	4.0	3.0-4.0
Adsorption			
Pressure	bar	1.15	1.1
Temperature	°C	25-32	25-32
Equilibrium Loading	g mol CO_2/kg	3.25	3.5-4.0
Heat of Adsorption	kJ/mol CO_2	38	38
Desorption			
Pressure	bar	0.3-1.0	0.3-1.0
Temperature	°C	100	90-110
Equilibrium Loading	g mol CO_2/kg	1.5	0.5-1.5
Heat of Desorption	kJ/mol CO_2	38	38
Proposed Module Design		*(for equipment developers)*	
Flow Arrangement/Operation	-	Fixed/cyclic	Fixed/cyclic
Flue Gas Flowrate	kg/hr	2,320,000	2,320,000
CO_2 Recovery, Purity, and Pressure	% / % / bar	90%, 99%, 1.0 bar	
Adsorber Pressure Drop	bar	0.14	0.10
Estimated Absorber/Stripper Cost of Manufacturing and Installation	$\frac{\$}{kg/hr}$	0.003	0.0025

Definitions:

STP – Standard Temperature and Pressure (15°C, 1 atm).

Sorbent – Adsorbate-free (i.e., CO_2-free) and dry material as used in adsorption/desorption cycle.

Manufacturing Cost for Sorbent – "Current" is market price of material, if applicable; "Target" is estimated manufacturing cost for new materials, or the estimated cost of bulk manufacturing for existing materials.

Adsorption – The conditions of interest for adsorption are those that prevail at maximum sorbent loading, which typically occurs at the bottom of the adsorption column. These may be assumed to be 1 atm total flue-gas pressure (corresponding to a CO_2 partial pressure of 0.13 bar) and 40°C; however, measured data at other conditions are preferable to estimated data.

Desorption – The conditions of interest for desorption are those that prevail at minimum sorbent loading, which typically occurs at the bottom of the desorption column. Operating pressure and temperature for the desorber/stripper are process-dependent. Measured data at other conditions are preferable to estimated data.

Pressure – The pressure of CO_2 in equilibrium with the sorbent. If the vapor phase is pure CO_2, this is the total pressure; if it is a mixture of gases, this is the partial pressure of CO_2. Note that for a typical pulverized coal (PC) power plant, the total pressure of the flue gas is about 1 atm and the concentration of CO_2 is about 13.2 percent. Therefore, the partial pressure of CO_2 is roughly 0.132 atm or 0.130 bar.

Packing Density – Ratio of the active sorbent area to the bulk sorbent volume.

Loading – The basis for CO_2 loadings is mass of dry, adsorbate-free sorbent.

Flow Arrangement/Operation – Gas-solid module designs include fixed, fluidized, and moving bed, which result in either continuous, cyclic, or semi-regenerative operation.

Estimated Cost – Basis is kg/hr of CO_2 in CO_2-rich product gas; assuming targets are met.

Other Parameter Descriptions:

Chemical/Physical Sorbent Mechanism – The adsorption is physical sorption based on weak van der Waals forces. This leads to low heats of adsorption.

Sorbent Attrition and Thermal/Hydrothermal Stability – The process design protects the adsorbent from moisture and potential hydrothermal degradation. If moisture should break through onto the adsorbent, the adsorbent can be regenerated completely. The adsorbent is thermally stable at temperatures of more than 300°C.

Sorbent Make-Up Requirements – Based on prior experience with similar sorbents in similar operating environments, the adsorbent life would be between five and 10 years. An adsorbent life of five years has been assumed to estimate the make-up requirements.

Waste Streams Generated – Except for the sorbents loaded with flue gas components, SO_x and mercury, no other waste streams are generated in the process. These can be disposed off as per current power plant practices for materials loaded with SO_x and Hg.

Proposed Module Design – The CO_2 capture modules will be designed to capture CO_2 from a 550-MW PC power plant. Multiple modules will be used to minimize field fabrication and maximize off-site fabrication. The separation skid will consist of a feed preparation section (flue gas compression and cooling), the CO_2 adsorption section (removal of impurities, CO_2 adsorption, and desorption), and the CO_2 compression section. Unless noted, flue gas feed pressure is 1.014 bara, temperature is 57°C, and composition leaving the flue gas desulfurization (FGD) unit (wet basis) should be assumed:

Composition (% vol)					Composition (ppmv)	
CO_2	H_2O	N_2	O_2	Ar	SO_x	NO_x
13.17	17.25	66.44	2.34	0.8	42	74

technology advantages

- The technology is able to utilize physical sorbents to obtain the same purity and recovery as chemical sorbents and amine-based absorption.
- The sorbents have lower heats of adsorption compared to reaction-based systems.
- The technology is able to produce >95 percent CO_2 at >90 percent recovery with an energy penalty of less than 60 percent of the energy penalty for the monoethanolamine (MEA) systems.
- The process is non-corrosive and can utilize carbon steel construction for the most part.

R&D challenges

- Heat management during both adsorption and regeneration.
- Water management.

results to date/accomplishments

- Two adsorbents with a CO_2 capacity greater than 5 wt% in cyclic steady state experiments have been identified.
- Adsorption and desorption isotherms, as well as the kinetic data for these adsorbents, have been measured.
- The heat and mass transfer data have been measured with different diameter beds (0.75 to 1.5 inch), and a preliminary design of the bench-scale unit for field-testing has been completed.
- Methods to remove contaminants such as nitrogen oxide (NO_x) and SO_x have been tested.
- A rigorous process model of the adsorption process has been developed, tested, and is undergoing modification.
- A preliminary technical and economic feasibility study of the process has been completed. The projected increase in LCOE is less than 45 percent, and the projected CO_2 capture cost is about $40/ton.
- A preliminary design and costing of a process unit capable of producing about one ton per day of CO_2 from flue gas was completed.
- Detailed mechanical design of the bench-scale test unit was completed and the components are being procured.

next steps

- Install tie-ins for the bench-scale unit in the field.
- Perform field-testing at NRG's Indian River power plant.
- Simulate the cyclic adsorption process using the modified adsorption process simulator.
- Update the techno-economic analysis based on field-test results and modeling results.
- Perform an environmental health and safety analysis.

available reports/technical papers/presentations

Jain, R., "Bench-scale Development and Testing of a Novel Adsorption Process for Post-Combustion CO_2 Capture," presented at the 2012 NETL CO_2 Capture Technology Meeting, Pittsburgh, Pennsylvania, July 2012. *http://www.netl.doe.gov/publications/proceedings/12/co2capture/presentations/2-Tuesday/R%20Jain-InnoSepra-Adsorption%20Process.pdf*.

DEVELOPMENT OF NOVEL CARBON SORBENTS FOR CO_2 CAPTURE

primary project goals

SRI International (SRI) is developing an innovative, low-cost, low-energy, carbon dioxide (CO_2)-consuming capture technology based on adsorption with a high-capacity and low-cost carbon sorbent. The project is validating sorbent performance in a bench-scale system for post-combustion applications and performing parametric testing to determine optimum operating conditions.

technical goals

- Determine properties of the sorbent, such as surface area, heat of absorption and desorption, compressive strength and attrition resistance, and size and shape of sorbent particles.
- Validate the performance of the sorbent in a bench-scale, falling-bed reactor.
- Perform parametric experiments to determine the optimum operating conditions for the system.
- Validate the performance of the sorbent using an actual flue gas from a coal-fired boiler.
- Evaluate the technical and economic viability of the technology.

technical content

The novel sorbent developed for the project is composed of carbon microbeads, as shown in Figure 1. The sorbent was manufactured by ATMI, Inc. Initially, the characteristics of the sorbent were determined using the BET adsorption technique and thermogravimetric analysis (TGA) under various temperatures, pressures, and gas exposures. Bench-scale tests were performed in three stages: absorber parametric testing, regenerator parametric testing, and cyclic testing. An integrated absorber-regenerator system was designed and operated for determining long-term durability of the sorbents. Based on the favorable results from the bench-scale tests at SRI with a simulated gas, the bench-scale system was tested at the University of Toledo (Toledo, Ohio) using a flue gas from a coal-fired steam boiler.

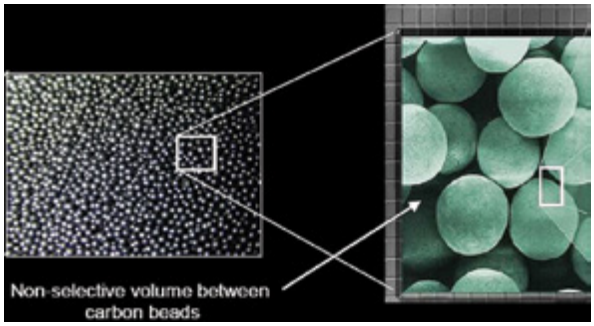

Figure 1: Graphic Displays of Novel Carbon Pellets Sorbent

technology maturity:
Bench-Scale Using Actual Flue Gas

project focus:
Novel Solid Sorbents

participant:
SRI International

project number:
NT0005578

NETL project manager:
Andrew O'Palko
andrew.opalko@netl.doe.gov

principal investigator:
Gopala Krishnan
SRI International
gopala.krishnan@sri.com

partners:
ATMI, Inc.

performance period:
10/1/08 – 11/30/13

Figure 2 depicts the proposed sorbent system for an existing coal-fired power plant. Flue gas first enters an existing flue gas desulfurization (FGD) system where most of the sulfur content is removed. The gas is then cooled before entering the cascading-bed adsorption reactor, which utilizes a high-capacity carbon sorbent (0.05 to 0.08 kg of CO_2 per kg of sorbent). As the gas stream passes over the lean sorbent, CO_2 is removed from the gas and adsorbed by the sorbent. The loaded sorbent cascades down the separation column and is heated by low-pressure steam, causing the sorbent to release the adsorbed CO_2. The CO_2 is siphoned off to a compressor where it can be prepared for sequestration. The sorbent is then dried, cooled, and sent back into the separation column for re-use and the cycle begins again.

Figure 3 represents the performance of the system after approximately 100 hours of operation. An 85 to 95 percent CO_2 capture and a CO_2 product gas purity of ≈100 percent was achieved. Note that a decrease in the CO_2 purity was observed due to an interruption of the steam feed. When the operation was resumed, the CO_2 purity value resumed to the original value, indicating the robust nature of the system.

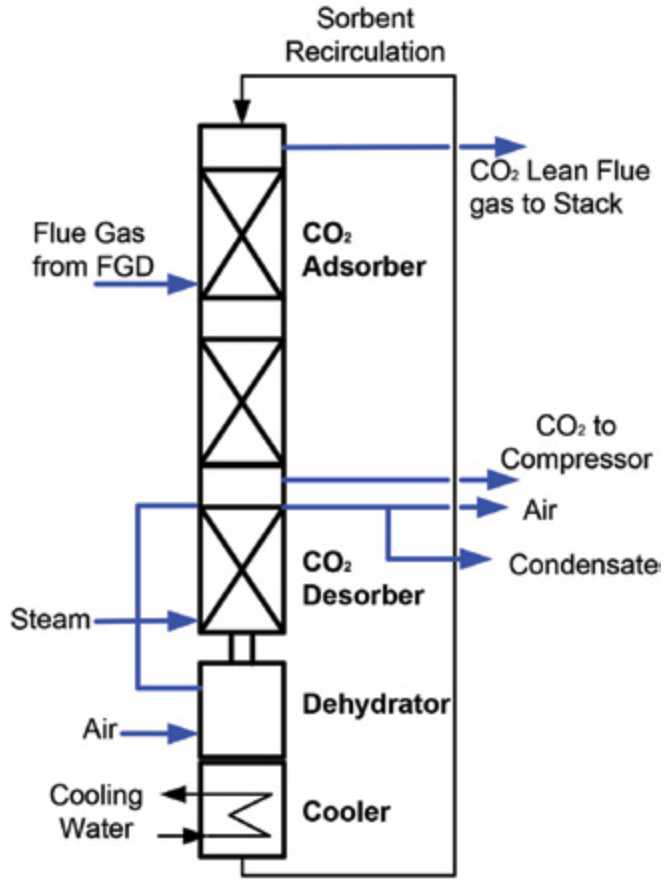

Figure 2: The Proposed Sorbent System

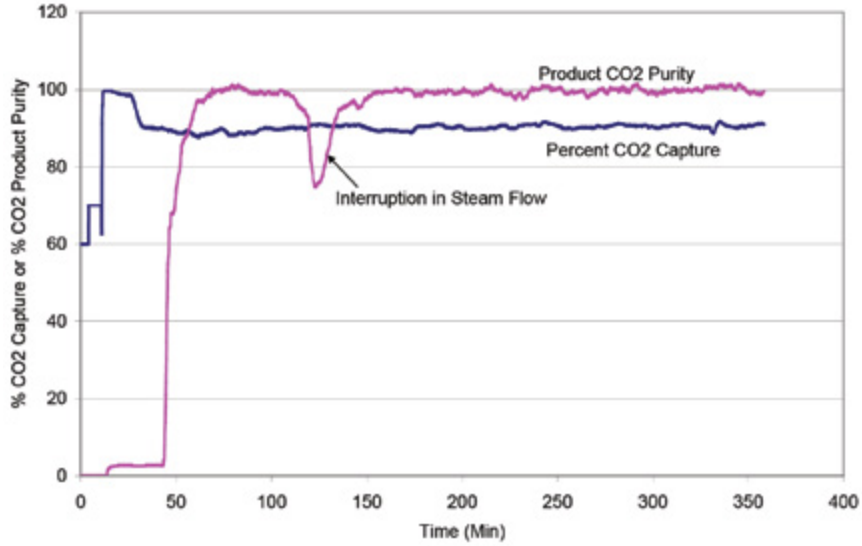

Figure 3: Typical Plot of CO_2 Capture Efficiency and Product Gas Purity in Field Test

TABLE 1: PROCESS PARAMETERS FOR SOLID CARBON SORBENT

	Units	Current R&D Value	Target R&D Value
Sorbent			
True Density @ STP	kg/m^3	2200	2200
Bulk Density	kg/m^3	700	700
Average Particle Diameter	mm	0.3	0.5
Particle Void Fraction	m^3/m^3	0.36	0.3
Packing Density	m^2/m^3	9 x108	1.1x109
Solid Heat Capacity @ STP	kJ/kg-K	1.0	1.0
Crush Strength	kg_f	3.3	3.3
Manufacturing Cost for Sorbent	$/kg	50	30
Adsorption			
Pressure	bar	1	1
Temperature	°C	15 – 25	25
Equilibrium Loading	g mol CO_2/kg-sorbent	1.1	1.3
Heat of Adsorption	kJ/mol CO_2	28	28
Desorption			
Pressure	bar	1	1
Temperature	°C	80 – 100	100
Equilibrium Loading	g mol CO_2/kg	0.01	0.01
Heat of Desorption	kJ/mol CO_2	25 to 28	25 to 28
Proposed Module Design		*(for equipment developers)*	
Flow Arrangement/Operation	-	Falling bead	Falling bead
Flue Gas Flowrate	kg/hr		
CO_2 Recovery, Purity, and Pressure	% / % / bar	99%, 90%, 1 bar	
Adsorber Pressure Drop	bar	1 x 10-3	4 x10-3
Estimated Absorber/Stripper Cost of Manufacturing and Installation	$ / kg/hr	200	200

Definitions:

STP – Standard Temperature and Pressure (15°C, 1 atm).

Sorbent – Adsorbate-free (i.e., CO_2-free) and dry material as used in adsorption/desorption cycle.

Manufacturing Cost for Sorbent – "Current" is market price of material, if applicable; "Target" is estimated manufacturing cost for new materials, or the estimated cost of bulk manufacturing for existing materials.

Adsorption – The conditions of interest for adsorption are those that prevail at maximum sorbent loading, which typically occurs at the bottom of the adsorption column. These may be assumed to be 1 atm total flue-gas pressure (corresponding to a CO_2 partial pressure of 0.13 bar) and 40°C; however, measured data at other conditions are preferable to estimated data.

Desorption – The conditions of interest for desorption are those that prevail at minimum sorbent loading, which typically occurs at the bottom of the desorption column. Operating pressure and temperature for the desorber/stripper are process-dependent. Measured data at other conditions are preferable to estimated data.

Pressure – The pressure of CO_2 in equilibrium with the sorbent. If the vapor phase is pure CO_2, this is the total pressure; if it is a mixture of gases, this is the partial pressure of CO_2. Note that for a typical pulverized coal (PC) power plant, the total pressure of the flue gas is about 1 atm and the concentration of CO_2 is about 13.2 percent. Therefore, the partial pressure of CO_2 is roughly 0.132 atm or 0.130 bar.

Packing Density – Ratio of the active sorbent area to the bulk sorbent volume.

Loading – The basis for CO_2 loadings is mass of dry, adsorbate-free sorbent.

Flow Arrangement/Operation – Gas-solid module designs include fixed, fluidized, and moving bed, which result in either continuous, cyclic, or semi-regenerative operation.

Estimated Cost – Basis is kg/hr of CO_2 in CO_2-rich product gas; assuming targets are met.

Other Parameter Descriptions:

Chemical/Physical Sorbent Mechanism – Rapid physical adsorption and desorption rates: The adsorption of CO_2 occurs on the micropores of the sorbent with low activation energy (< 5 kJ/mole), allowing rapid equilibrium. Similarly, the adsorbed CO_2 is desorbed rapidly at the regeneration temperature (≈100°C), and the sorbent performance can be predicted by equilibrium models.

Sorbent Contaminant Resistance – The sorbent is pure carbon and generally resistant to many contaminants. The sulfur dioxide (SO_2) needs to be reduced to <10 parts per million (ppm) levels, preferably to 1 ppm level. Nitrogen oxides (NO_x) can be present at ≈50 ppm levels. Fly-ash particles in flue gas downstream of an electrostatic precipitator do not appear to interfere with CO_2 adsorption.

Sorbent Attrition and Thermal/Hydrothermal Stability – The sorbent granules are hard and attrition-resistant. No observable attrition was noticed in a recent field test conducted over 7,000 cycles of adsorption and regeneration. The sorbent has a high hydrothermal stability and direct heating with steam can be used for CO_2 desorption. The sorbent regenerated at the elevated temperature can be cooled by evaporative cooling of moisture adsorbed on the sorbent.

Flue Gas Pretreatment Requirements – Reduce SO_2 levels to < 5 ppm. The flue gas needs to be cooled to ≈25°C.

Sorbent Make-Up Requirements – Preliminary data suggest multi-year lifetime for sorbent make-up.

Waste Streams Generated – The sorbent particles are hard and attrition-resistant, and no fine sorbent particles are generated during operation. Steam condensate from the dehydrator may need to be treated before cycling back to the steam boiler.

Proposed Module Design – The module will be located between FGD and flue gas chimney

technology advantages

- High CO_2 Capacity: The sorbent has a high capacity for CO_2 adsorption (20 wt% at 1 atm CO_2) and good selectivity for CO_2 over other flue gas components (CO_2-N_2 separation factor > 20).
- Rapid Adsorption and Desorption Rates: The adsorption of CO_2 occurs on the micropores of the sorbent with low activation energy (< 5 kJ/mole), allowing rapid equilibrium. Similarly, the adsorbed CO_2 is desorbed rapidly at the regeneration temperature (≈100°C), and the sorbent performance can be predicted by equilibrium models.
- Low Heat of Adsorption and Desorption: The relatively low heats (25 to 28 kJ/mole) indicate that this process has a low-heat demand for regeneration.
- High Hydrothermal Stability: Direct heating with steam can be used for CO_2 desorption. The sorbent regenerated at the elevated temperature can be cooled by evaporative cooling of moisture adsorbed on the sorbent.
- Mechanical Robustness for Long Lifetime: The sorbent granules are hard and attrition-resistant. No observable attrition was noticed in a recent field test conducted over 7,000 cycles of adsorption and regeneration.
- Spherical Morphology of the Sorbent Granules: The spherical nature of the sorbent granules (200 to 400 µm in diameter) eliminates sorbent dust generation during use by the breakage of sharp points on the outer edge of granules.
- Resistance to Agglomeration at the Operating Temperature: Carbon particles do not sinter at 100°C. Agglomeration of the sorbent microbeads is unlikely.
- Low-Heat Capacity: The low-heat capacity of the sorbent (1 J/g/K), as compared to that of water, minimizes the thermal energy needed to heat the sorbent to the regeneration temperature.

- High-Thermal Conductivity: The thermal conductivity of 0.8 w/m-K enables rapid thermal equilibrium between the surface and interior of the microbeads.
- Hydrophobicity: The sorbent is essentially hydrophobic, indicating little interaction between the condensed water and the sorbent. The thermal energy required to desorb the condensed water is significantly less than that required to evaporate water from oxide surfaces such as those found in molecular sieves (zeolites), alumina, and silica.

R&D challenges

- Other elements of the flue gas, such as sulfur oxides (SO_x), may compete with CO_2 in being adsorbed by the sorbent, reducing the amount of CO_2 that is adsorbed as the gas passes through the reactor.
- A low temperature needs to be maintained for optimal adsorption conditions. The flue gas needs to be cooled to approximately 25°C.
- Thermal management to recover part of the sensible heat present in the hot sorbent to preheat the sorbent entering the stripper. Proprietary heat exchangers have been designed to recover heat from the sorbent (thereby cooling the sorbent) and to use the heat to preheat the sorbent.

results to date/accomplishments

- Completed 135 hours of testing using the flue gas from a coal-fired steam boiler facility at the University of Toledo.
- Completed the long-term, 1,000-cycle test to determine the durability of the sorbent.
- Completed bench-scale parametric tests and evaluation of optimum process conditions.
- Completed field testing with their bench-scale unit using flue gas from a coal-fired boiler at the University of Toledo. Testing ended after 135 hours (approximately 7,000 cycles of adsorption and desorption).
- Evaluated several physical, chemical, and mechanical properties of the sorbent in the context of the CO_2 capture system using a bench-scale, fixed-bed reactor.
- Demonstrated regeneration using direct contact steam producing relatively pure CO_2.
- Simulated CO_2 capture using novel carbon sorbent in a pulverized coal (PC)-fired boiler from coal to electricity and compressed CO_2.
- Determined several physical and chemical properties of the advanced carbon sorbent in the context of flue gas CO_2 capture.

next steps

- Complete CO_2 capture tests with flue gas from a PC boiler.
- Install bench-scale reactor at the National Carbon Capture Center (NCCC).

available reports/technical papers/presentations

Krishnan, G., "Development of Novel Carbon Sorbents for CO_2 Capture," presented at the 2010 NETL CO_2 Capture Technology Meeting, Pittsburgh, Pennsylvania, September 2010. *http://www.netl.doe.gov/publications/proceedings/10/co2capture/presentations/monday/Gopala%20Krishnan-NT0005578.pdf*.

Krishnan, G., "Development of Novel Carbon Sorbents for CO_2 Capture," presented at the 9th Annual Conference on Carbon Capture and Sequestration, Pittsburgh, Pennsylvania, May 2010.

Krishnan, G., "Development of Novel Carbon Sorbents for CO_2 Capture – Project Overview," presented at the Annual NETL CO_2 Capture Technology for Existing Plants R&D Meeting, Pittsburgh, Pennsylvania, March 2009. *http://www.netl.doe.gov/publications/proceedings/09/CO2/pdfs/5578%20SRI%20carbon%20sorbent%20%28Hornbostel%29%20mar09.pdf*.

LOW-COST SORBENT FOR CAPTURING CO_2 EMISSIONS GENERATED BY EXISTING COAL-FIRED POWER PLANTS

technology maturity:

Bench-Scale Using Simulated Flue Gas

project focus:

Low-Cost Solid Sorbent

participant:

TDA Research

project number:

NT0005497

NETL project manager:

Andrew O'Palko
andrew.opalko@netl.doe.gov

principal investigator:

Jeannine E. Elliott
TDA Research, Inc.
jelliott@tda.com

partners:

Babcock & Wilcox (B&W)
Louisiana State University (LSU)
Western Research Institute (WRI)

performance period:

11/1/08 – 8/31/13

primary project goals

TDA Research is designing and developing a low-cost solid sorbent that is capable of cost-effectively and efficiently capturing carbon dioxide (CO_2) from existing coal-fired power plants, as well as an adsorption/regeneration process designed around that material.

technical goals

- Use existing information to select candidates for a low-cost, highly efficient CO_2 sorbent.
- Perform thermogravimetric analysis (TGA), surface area (BET), and crush strength analyses to characterize the sorbent.
- To determine the effects of sulfur oxides (SO_x), nitrogen oxides (NO_x), and water (H_2O) on the working capacity of the optimum sorbent.
- Construct and demonstrate a novel CO_2 removal system for real flue gas stream.

technical content

TDA's CO_2 capture system uses a dry alkalized alumina sorbent. The regenerable sorbent acts as a physical adsorbent for CO_2. The CO_2 capture process runs near isothermally at around 150°C in both adsorption and regeneration. No heating or cooling of the sorbent between absorption and regeneration steps is required. The sorbent is regenerated with low-pressure (15.5 pounds per square inch absolute [psia]) steam. This regeneration is done at near the same temperature as adsorption.

The sorbent has shown excellent tolerance to contaminants. Laboratory tests using simulated flue gas with sulfur dioxide (SO_2) were performed for more than 2,000 cycles. Testing with NO_x has been conducted for more than 180 cycles. No loss of CO_2 loading capacity was observed during these tests. For this process, additional flue gas pretreatment upstream of the CO_2 capture unit may not be required beyond what is already in place with existing flue gas desulfurization (FGD) units.

Figure 1 shows an overall schematic of TDA's system, which consists of three primary components: (1) the absorber/regenerator unit; (2) the low-pressure steam generator; and (3) the CO_2 compression and purification unit. The process is designed for the sorbent to pull the dilute CO_2 out of the flue gas at intermediate temperature and near ambient pressure, and then be regenerated with low-pressure superheated steam. TDA is developing both the sorbent and the process designed around that material.

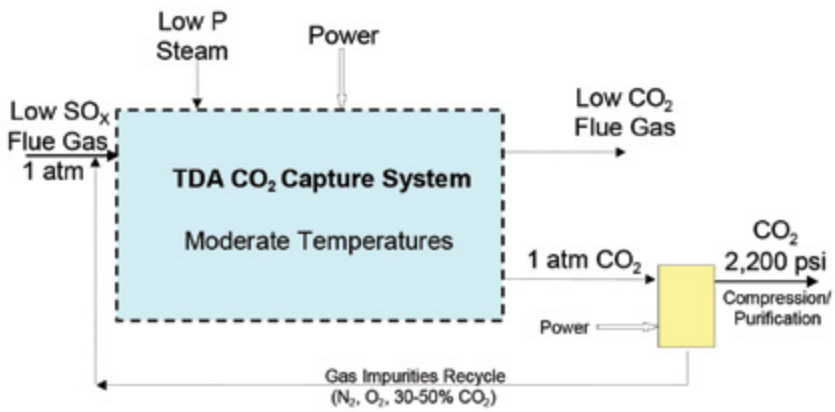

Figure 1: Schematic of TDA's CO_2 Emission Control System

TABLE 1: PROCESS PARAMETERS

	Units	Current R&D Value	Target R&D Value
Sorbent			
True Density @ STP	kg/m^3	750	750
Bulk Density	kg/m^3	520	520
Average Particle Diameter	mm	1.3	3.175
Particle Void Fraction	m^3/m^3	0.55	0.55
Packing Density	m^2/m^3		
Solid Heat Capacity @ STP	kJ/kg-K	0.72	0.72
Crush Strength	kg_f	8	8
Manufacturing Cost for Sorbent	$/kg		
Adsorption			
Pressure	bar	0.13	0.13
Temperature	°C	160	150
Equilibrium Loading	g mol CO_2/kg	1.5	1.5
Heat of Adsorption	kJ/mol CO_2	-12.5 to -41.9	-12.5 to -41.9
Desorption			
Pressure	bar	0.4	0.5
Temperature	°C	160	150
Equilibrium Loading	g mol CO_2/kg	1.5	1.5
Heat of Desorption	kJ/mol CO_2	12.5 to 41.9	12.5 to 41.9
Proposed Module Design		*(for equipment developers)*	
Flow Arrangement/Operation	-		
Flue Gas Flowrate	kg/hr		
CO_2 Recovery, Purity, and Pressure	% / % / bar		
Adsorber Pressure Drop	bar		
Estimated Absorber/Stripper Cost of Manufacturing and Installation	$\frac{\$}{kg/hr}$		

Definitions:

STP – Standard Temperature and Pressure (15°C, 1 atm).

Sorbent – Adsorbate-free (i.e., CO_2-free) and dry material as used in adsorption/desorption cycle.

Manufacturing Cost for Sorbent – "Current" is market price of material, if applicable; "Target" is estimated manufacturing cost for new materials, or the estimated cost of bulk manufacturing for existing materials.

Adsorption – The conditions of interest for adsorption are those that prevail at maximum sorbent loading, which typically occurs at the bottom of the adsorption column. These may be assumed to be 1 atm total flue-gas pressure (corresponding to a CO_2 partial pressure of 0.13 bar) and 40°C; however, measured data at other conditions are preferable to estimated data.

Desorption – The conditions of interest for desorption are those that prevail at minimum sorbent loading, which typically occurs at the bottom of the desorption column. Operating pressure and temperature for the desorber/stripper are process-dependent. Measured data at other conditions are preferable to estimated data.

Pressure – The pressure of CO_2 in equilibrium with the sorbent. If the vapor phase is pure CO_2, this is the total pressure; if it is a mixture of gases, this is the partial pressure of CO_2. Note that for a typical pulverized coal (PC) power plant, the total pressure of the flue gas is about 1 atm and the concentration of CO_2 is about 13.2 percent. Therefore, the partial pressure of CO_2 is roughly 0.132 atm or 0.130 bar.

Packing Density – Ratio of the active sorbent area to the bulk sorbent volume.

Loading – The basis for CO_2 loadings is mass of dry, adsorbate-free sorbent.

Flow Arrangement/Operation – Gas-solid module designs include fixed, fluidized, and moving bed, which result in either continuous, cyclic, or semi-regenerative operation.

Other Parameter Descriptions:

Chemical/Physical Sorbent Mechanism – The sorbent is an adsorbent and is regeneration with steam.

Sorbent Contaminant Resistance – Based on extended cycling 1,500 hours with simulated flue gas with 13.8% CO_2, 104 parts per million (ppm) SO_2, 3% oxygen (O_2), and 9% H_2O, sorbent life was calculated to be one year with 5 ppm of SO_2. No effect of NO_x on capacity was seen after 200 cycles with 739 ppm nitric oxide (NO) and 84 ppm nitrogen dioxide (NO_2).

Flue Gas Pretreatment Requirements – Flue gas should have <5 ppm SO_X.

Proposed Module Design – TDA's CO_2 capture system is located downstream of the FGD unit. The adsorbent removes dilute CO_2 from the flue gas (10 to 14% CO_2, 8 to 10% H_2O, <5 ppm SO_2) at intermediate temperature (160°C) and near ambient pressure.

technology advantages

- Low regeneration energy.
- Rapid adsorption/regeneration kinetics due to surface-only adsorption.
- Isothermal operation.

R&D challenges

- Effectively produce a sorbent from low-cost raw materials with extensive regenerative life of the sorbent.
- Minimizing the parasitic demands from the sorbent system.

results to date/accomplishments

- Demonstrated bench-scale unit at Western Research Institute on coal-derived flue gas.
- Completed lab-scale reactor testing.
- Completed design of the bench-scale unit.
- Performed TGA, BET, and crush strength analyses on a variety of sorbent materials.
- Determined alkalized alumina to be the optimum sorbent with a loading capacity of 0.7 wt%.
- Performed extended period testing up to 1,800 cycles and found the sorbent maintained its loading capacity at near-constant levels throughout.
- Optimized the sorbent composition and production process.
- Performed sorbent testing and characterization.
- Initiated 1,500-hour sorbent cycling test to evaluate the SO_x contamination of the sorbent and to complete wear and service assessments of the sorbent.
- Evaluated the affect of NO_x in simulated flue gas. No loss of CO_2 loading capacity observed after 180 cycles with 820 ppm of NO_x.
- Created a CO_2 capture process design and ASPEN model that includes steam source, CO_2 compression, and heat sources, and calculates efficiency.
- Evaluated improved sorbent material with 40 percent higher loading capacity.

next steps

Evaluate new process designs.

available reports/technical papers/presentations

Elliot, J., and Srinivas, G., "Low Cost Sorbent for CO_2 Capture on Existing Plants," presented at the 2012 NETL CO_2 Capture Technology Meeting, Pittsburgh, Pennsylvania, July 2012. *http://www.netl.doe.gov/publications/proceedings/12/co2capture/presentations/1-Monday/J%20Elliott-TDA-Low%20Cost%20Sorbent.pdf*.

Elliot, J., and Srinivas, G., "Post-Combustion CO_2 Capture with Alkalized Alumina," presented at the 2011 NETL CO_2 Capture Technology Meeting, Pittsburgh, Pennsylvania, August 2011. *http://www.netl.doe.gov/publications/proceedings/09/CO2/pdfs/5497%20TDA%20sorbent%20%28Elliott%29%20mar09.pdf*.

Elliot, J.; Srinivas, G.; and Copeland, R., "Low-Cost Sorbent for Capturing CO_2 Emissions Generated by Existing Coal-Fired Power Plants," presented at the 2010 NETL CO_2 Capture Technology Meeting, Pittsburgh, Pennsylvania, September 2010. *http://www.netl.doe.gov/publications/proceedings/10/co2capture/presentations/monday/Jeannine%20Elliott-NT0005497.pdf*.

Elliot, J.; Srinivas, G.; and Copeland, R., "Low Cost Solid Sorbent for CO_2 Capture on Existing Coal-Fired Power Plants," presented at the 26th Annual International Pittsburgh Coal Conference, Pittsburgh, Pennsylvania, September 2009. *http://www.tda.com/Library/docs/PCC%20Sept%202009%20v3.pdf*.

Elliot, J., and Srinivas, G., "Low-Cost Sorbent for Capturing CO_2 Emissions Generated by Existing Coal-Fired Power Plants – Project Overview," presented at the Annual NETL CO_2 Capture Technology for Existing Plants R&D Meeting, Pittsburgh, Pennsylvania, March 2009. *http://www.netl.doe.gov/publications/proceedings/09/CO2/pdfs/5497%20TDA%20sorbent%20%28Elliott%29%20mar09.pdf*.

METAL MONOLITHIC AMINE-GRAFTED SILICA FOR CO_2 CAPTURE

primary project goals

The University of Akron set out to develop a low-cost carbon dioxide (CO_2) capture technology by integrating metal monoliths with a grafted amine sorbent.

technical goals

- 1.5 mmol-CO_2/g-sorbent.
- 1.0 mmol-sulfur dioxide (SO_2)/g-sorbent.
- 500 repeated thermal cycles of sorbent between CO_2 adsorption at 25°C and desorption at 110°C with less than a 10 percent degradation in original CO_2 capture capacity.

technical content

The key innovation of this project is the utilization of metal foils with amine-grafted porous silica to fabricate a highly efficient and low-cost CO_2 adsorption system. Porous silica, alumina, zeolite, and carbon, which are used as commercial adsorbents for a wide range of applications, are impregnated with alkyl amine molecules such as monoethanolamine (MEA)/tetraethylenepentamine. The adsorption capacity of this novel amine-grated silica was determined to be greater than 1.5 mmol-CO_2/g-sorbent because of the abundance of available amine functional groups on the amine-grafted silica. The adsorption and desorption can be further optimized by the sorbent preparation procedures with additives.

The metal monolithic structure allows the rapid removal of heat of CO_2 adsorption. The surface of the metal monolith is coated with a layer of silica, carbon fibers, and a binder. Calcination of the metal monolith with this coating produces the silica or zeolite layers structure with 10-µm diameter channels. The binder and carbon fiber concentration is fine-tuned to optimize the number of the micro channel pathways for CO_2 diffusion into the amine-grafted silica and zeolite.

The University of Akron, as part of this project, has also investigated using coal fly ash treated first with sodium hydroxide (NaOH) and/or hydrochloric acid (HCl), and then impregnated with the amine tetraethylenepentamine. Coal fly ash was investigated as a support for amine due to its ready availability and low cost.

technology maturity:

Pilot-Scale Using Simulated Flue Gas, 15 kW

project focus:

Metal Monolithic Amine-Grafted Zeolites

participant:

University of Akron

project number:

FC26-07NT43086

NETL project manager:

I. Andrew Aurelio
isaac.aurelio@netl.doe.gov

principal investigator:

Steven Chuang
University of Akron
chuang@uakron.edu

partners:

FirstEnergy

performance period:

2/21/2007 – 3/31/11

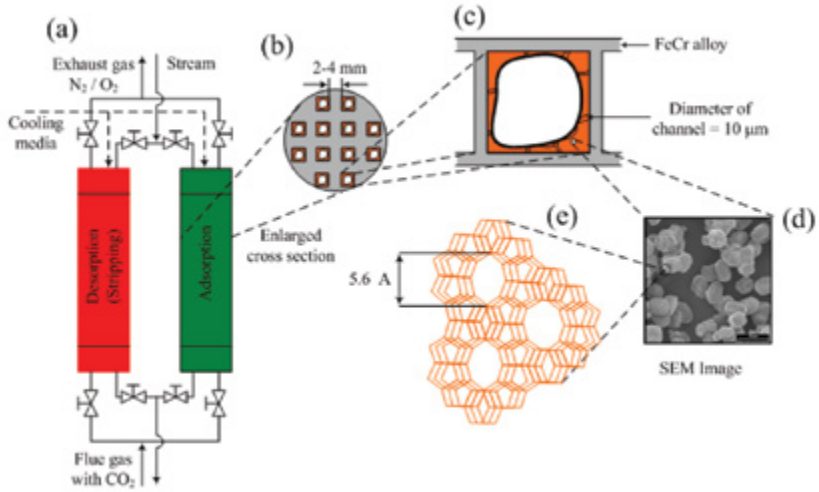

Figure 1: Metal Monolithic Amine-Grafted Silica Sorbents

Figure 1 displays the amine-grafted zeolite structure (5.6 Angstroms in length) inside an adsorption unit. The amine is located in the adsorption (a) chamber within holding tubes. The tubes housed in the adsorption unit holds the individual metal (b) tubes with the amine approximately 2 to 4 mm apart. The silica or zeolite is coated inside the square metal tube. Gas enters the tube and flows through the channels (d) of the amine grafted silica, which are 10 µm in diameter. Heating for CO_2 desorption (i.e., regeneration) and cooling for adsorption are achieved by 40 pounds per square inch gauge (psig) steam and cooling water flowing through the jacket side of the adsorber. Desorbed CO_2 is purged from the channels of metal monoliths by pulses of steam and hot air. The goal is that CO_2 and SO_2 adsorption capacity of the amine will be greater than 1.5 mmol-CO_2/g-sorbent and 1.0 mmol-CO_2/g-sorbent, respectively. The amine is capable of greater than 500 times regeneration with less than 10 percent degradation in CO_2 capacity. The amine-grafted silica sorbent is expected to exhibit a heat capacity of 1.5 kJ/kg K. The CO_2 will be captured at an approximate temperature of 50°C (140°F) and then released at approximately 110°C (230°F).

TABLE 1: PROCESS PARAMETERS FOR METAL MONOLITHIC AMINE-GRAFTED SILICA SORBENTS

	Units	Current R&D Value	Target R&D Value
Sorbent			
True Density @ STP	kg/m^3		
Bulk Density	kg/m^3	0.5	0.5
Average Particle Diameter	mm	0.05-1	<1
Particle Void Fraction	m^3/m^3		
Packing Density	m^2/m^3	.43	<0.5
Solid Heat Capacity @ STP	kJ/kg-K		
Crush Strength	kg$_f$		
Manufacturing Cost for Sorbent	$/kg	14	12
Adsorption			
Pressure	bar	1	1
Temperature	°C	50	<55
Equilibrium Loading	g mol CO_2/kg	2.4	3.1
Heat of Adsorption	kJ/mol CO_2	60	55
Desorption			
Pressure	bar	1-1.05	1-1.05
Temperature	°C	100-110	100-110
Equilibrium Loading	g mol CO_2/kg	2.4	3.1
Heat of Desorption	kJ/mol CO_2		

TABLE 1: PROCESS PARAMETERS FOR METAL MONOLITHIC AMINE-GRAFTED SILICA SORBENTS

	Units	Current R&D Value	Target R&D Value
Proposed Module Design		*(for equipment developers)*	
Flow Arrangement/Operation	-		
Flue Gas Flowrate	kg/hr		
CO_2 Recovery, Purity, and Pressure	% / % / bar		
Adsorber Pressure Drop	bar		
Estimated Absorber/Stripper Cost of Manufacturing and Installation	$\frac{\$}{kg/hr}$		

Definitions:

STP – Standard Temperature and Pressure (15°C, 1 atm).

Sorbent – Adsorbate-free (i.e., CO_2-free) and dry material as used in adsorption/desorption cycle.

Manufacturing Cost for Sorbent – "Current" is market price of material, if applicable; "Target" is estimated manufacturing cost for new materials, or the estimated cost of bulk manufacturing for existing materials.

Adsorption – The conditions of interest for adsorption are those that prevail at maximum sorbent loading, which typically occurs at the bottom of the adsorption column. These may be assumed to be 1 atm total flue-gas pressure (corresponding to a CO_2 partial pressure of 0.13 bar) and 40°C; however, measured data at other conditions are preferable to estimated data.

Desorption – The conditions of interest for desorption are those that prevail at minimum sorbent loading, which typically occurs at the bottom of the desorption column. Operating pressure and temperature for the desorber/stripper are process-dependent. Measured data at other conditions are preferable to estimated data.

Pressure – The pressure of CO_2 in equilibrium with the sorbent. If the vapor phase is pure CO_2, this is the total pressure; if it is a mixture of gases, this is the partial pressure of CO_2. Note that for a typical pulverized coal (PC) power plant, the total pressure of the flue gas is about 1 atm and the concentration of CO_2 is about 13.2 percent. Therefore, the partial pressure of CO_2 is roughly 0.132 atm or 0.130 bar.

Packing Density – Ratio of the active sorbent area to the bulk sorbent volume.

Loading – The basis for CO_2 loadings is mass of dry, adsorbate-free sorbent.

Flow Arrangement/Operation – Gas-solid module designs include fixed, fluidized, and moving bed, which result in either continuous, cyclic, or semi-regenerative operation.

Estimated Cost – Basis is kg/hr of CO_2 in CO_2-rich product gas; assuming targets are met.

Other Parameter Descriptions:

Chemical/Physical Sorbent Mechanism – $CO_2 + R\text{-}NH_2 \rightarrow$ Carbamate/ammonium ions and Carbamic acid

Sorbent Contaminant Resistance – Sorbent capacity decreased by more than 50 percent after 30 cycles in 15 percent CO_2 and 250 parts per million (ppm) SO_2.

Sorbent Attrition and Thermal/Hydrothermal Stability – Sorbent capacity decreased by less than 10 percent after more than 500 cycles under thermal/hydrothermal conditions.

Flue Gas Pretreatment Requirements – Less than 20 ppm SO_2.

Sorbent Makeup Requirements – Less than 10 percent after 500 cycles.

Waste Streams Generated – Degraded sorbents will be re-activated.

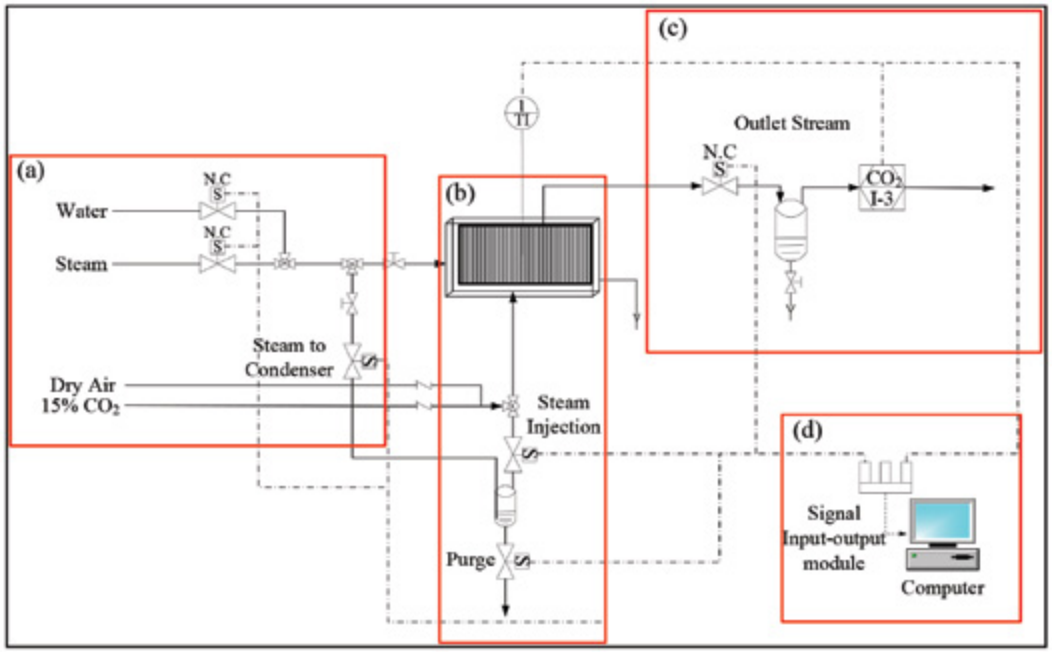

Figure 2: Process Schematic of the Monolith Adsorber

Adsorption temperature: < 40°C; desorption temperature: 105 to 115°C; pressure: 1 to 1.3 atm.

technology advantages

- High stability for CO_2 adsorption and desorption.
- Accelerated removal of the heat of adsorption.
- Low regeneration heat duty due to the low heat capacity of the sorbent.
- Low-cost immobilized amine sorbent.

R&D challenges

- The scale-up transition from lab- to bench-scale tests.
- Temperature swing adsorption requires a long cycle time due to the heating and cooling of the sorbent.
- Contaminants, such as sulfur oxides (SO_x), will react with amine functional groups similar to the MEA process.
- Currently, the CO_2 capture capacity of the sorbent is too low.

results to date/accomplishments

- The first generation of immobilized amine sorbents underwent 500 CO_2 capture cycles with less than 15 percent degradation. Refining in composition and preparation method resulted in sorbents with high stability for more than 1,100 CO_2 capture cycles, but lower capture capacity.
- Zeolite was shown to not be an effective support because of its hydrophilicity and small pore sizes.
- Developed a pilot-scale sorbent manufacturing process at a rate of 1 kg/hr.
- Enhanced the sorbent resistance to SO_2 poisoning by adding a proprietary additive to the CO_2 sorbent.

- A binder agent allows to agglomerate powder sorbents into rod or spherical pellets while maintaining the CO_2 capture capacity of the sorbent and yielding to low attrition rates.
- The operation under fixed-bed conditions present limitations in heat transfer: (1) slowing down the CO_2 capture process and (2) causing the sorbent to degrade.
- The CO_2 capture capacity could be increased 1.6 to 1.9 times when H_2O is present in the flue gas as compared to capture in dry conditions.
- Demonstrated the sorbent at pilot-scale, a 5-kg fixed bed. Adsorption was carried out at 55°C and desorption was with steam at 110°C.

next steps

This project ended on March 31, 2011.

available reports/technical papers/presentations

Chuang, S.S.C., "Amine absorber for carbon dioxide capture and processes for making and using the same,"

US 8377173 B_2, US Patent, Publication date: Feb. 19, 2013.

Chuang, S.S.C., "Metal Monolithic Amine-Grafted Zeolites for CO_2 Capture Power Plants," presented at the 2010 NETL CO_2 Capture Technology Meeting, Pittsburgh, Pennsylvania, September 2010. *http://www.netl.doe.gov/publications/proceedings/10/co2capture/presentations/monday/Steven%20Chuang-NT43086.pdf*.

Chuang, S.S.C.; Fisher, J.; and Tanthana, J., "Metal Monolithic Amine-grafted Zeolites for CO_2 Capture," presented at the Annual NETL CO_2 Capture Technology for Existing Plants R&D Meeting, Pittsburgh, Pennsylvania, March 2009. *http://www.netl.doe.gov/publications/proceedings/09/CO2/pdfs/43086%20Akron%20amine-zeolite%20sorbent%20%28Chuang%29%20mar09.pdf*.

Tanthana, J., and Chuang, S.S. C., "In Situ Infrared Study of the Role of PEG in Stabilizing Silica-Supported Amines for CO_2 Capture," Chemical & Sustainability Energy & Materials, 3, 957-964, 2010. *http://onlinelibrary.wiley.com/doi/10.1002/cssc.201000090/abstract*.

Fisher II, J.C.; Tanthana, J.; and Chuang, S.S.C., "Oxide-supported Tetraethylenepentamine for Carbon Dioxide Capture," Environmental Progress & Sust Energy, 28 (4), 589-598, 2009. *http://onlinelibrary.wiley.com/doi/10.1002/ep.10363/abstract*.

CO_2 REMOVAL FROM FLUE GAS USING MICROPOROUS METAL ORGANIC FRAMEWORKS

primary project goals

UOP set out to design and develop a carbon dioxide (CO_2) removal system that employs metal organic framework (MOF) sorbents.

technical goals

- Use combinatorial chemistry to systematically synthesize and characterize a wide range of MOF and related materials.
- Screen materials for hydrothermal stability.
- Collect isotherm data for subsequent development and optimization.
- Determine the effects of water on CO_2 adsorption.
- Develop and validate material scale-up and forming procedures.
- Select the best one or two materials for final optimization and scale-up.
- Determine the effects of contaminants on the performance of scaled-up materials.
- Understand detailed kinetic and equilibrium data for incorporation in a process design and an economic analysis.

technical content

MOFs are extremely high surface area, crystalline, microporous, and thermally stable materials that have shown exceptional storage capacity for CO_2, methane, hydrogen, and other gases. MOFs typically consist of transition metal vertices, or hubs, attached three-dimensionally to other metal vertices by organic "linker" molecules. After removal of reaction solvent, the resulting porosity can be adjusted by simply changing the length or composition of the molecules used to link the metal vertices. Well-ordered openings, channels, and pockets in the structures are from a few angstroms to tens of angstroms. Figure 1 represents the building blocks used to create prototypical MOF-5, in which the green ball represents the metal-containing hub, and the yellow cylinder represents the organic linker.

technology maturity:

Laboratory-Scale, Simulated Flue Gas

project focus:

CO_2 Removal from Flue Gas Using Microporous MOFs

participant:

RTI International

project number:

FC26-07NT43092

NETL project manager:

David Lang
david.lang@netl.doe.gov

principal investigator:

Richard Willis
UOP LLC
richard.willis@uop.com

partners:

University of Edinburgh
University of Michigan
Vanderbilt University
Northwestern University

performance period:

3/12/07 – 6/30/10

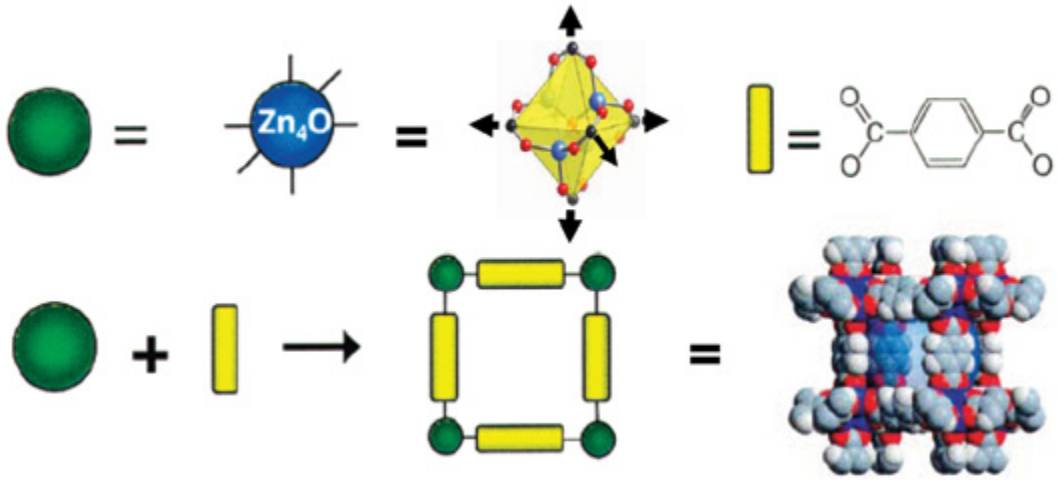

Figure 1: Building Blocks Used to Create Prototypical MOF-5

More than 50 MOFs for CO_2 adsorption were prepared from literature reports or designed by the experimenters. Table 1 displays the top MOFs for CO_2 capture.

TABLE 1: TOP 10 MOFS FOR CO_2 CAPTURE

Sample	Loading (mol/kg)	Loading (wt%)	Heat of Absorption (kJ/mol)
Mg\DOBDC (2)	4.73	20.9	60.1
Ni\DOBDC	3.40	15.0	27.2
Co\DOBDC	1.84	8.1	19.9
Mg\DOBDC (1)	1.28	5.6	21.3
HKUST-1 (CuBTC)	0.42	1.8	23.3
Zn\DOBDC	0.41	1.8	22.9
A1-MIL-110	0.24	1.1	21.7
Cr-MIL-101	0.18	0.8	13.3
Tb-MOF-76	0.18	0.8	21.7
A1-MIL-53	0.17	0.7	26
Zn-IRMOF-1	0.13	0.6	13.5

MOF-based adsorbents will be utilized in a vacuum pressure swing adsorption (VPSA) process for removal of CO_2 from flue gas. Figure 2 represents an example of MOF CO_2 adsorption capabilities as a function of pressure (for M/DOBDC, M represents the metal).

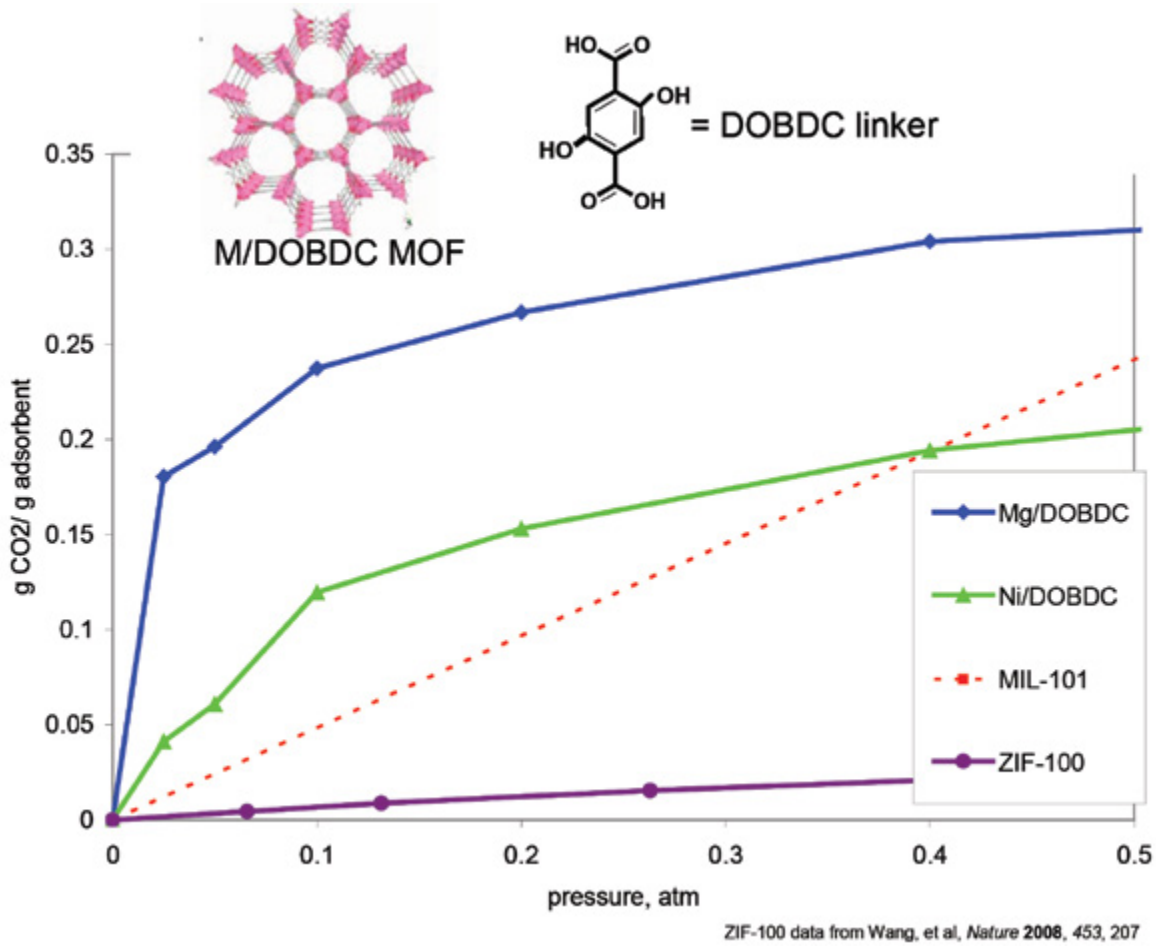

Figure 2: Example of MOF CO_2 Adsorption Capabilities as a Function of Pressure

The MOF-based VPSA CO_2 recovery system will be located after a contaminant-removal section and before the final CO_2 compression and drying section. The nitrogen (N_2)-rich waste stream (raffinate) will be sent to the stack. A process schematic is provided in Figure 3.

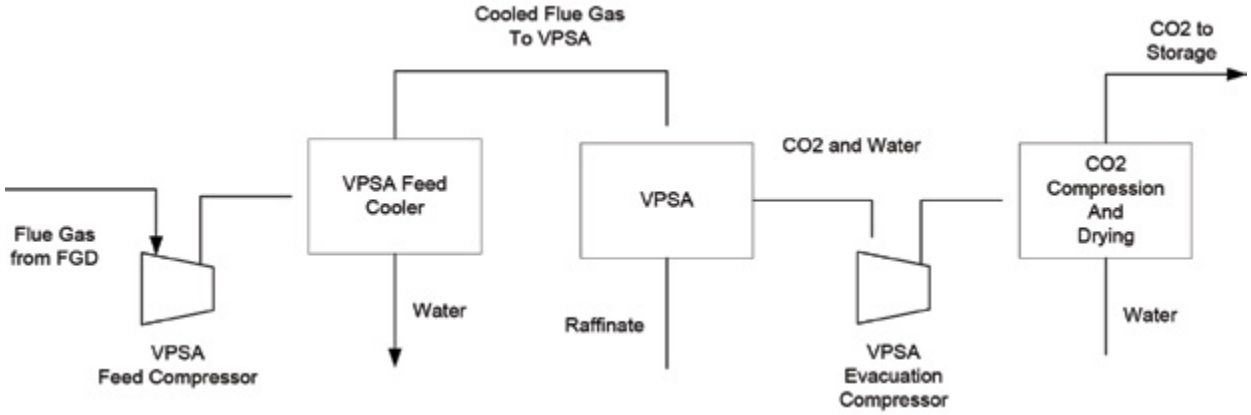

Figure 3: The MOF-Based CO_2 Capture System Process Schematic

Downstream from the flue gas desulfurization (FGD) and polishing scrubber, flue gas pressure is boosted in the VPSA feed compressor by approximately 4.8 pounds per square inch (psi) to make up for pressure drop in the contaminant-removal section and to maximize the adsorption of CO_2 in the VPSA unit. The VPSA feed compressor will be followed by a VPSA feed cooler to lower the temperature of the flue gas to approximately 100°F. It is likely that two parallel operating VPSA feed compressor and VPSA feed cooler trains will be required. Compressing and cooling the flue gas to 100°F will reduce the flue gas volume flow rate (actual cubic feet per minute [ACFM]) by up to 35 percent, and concurrently knock out at least 75 percent of the water vapor originally present in the flue gas. The combined lower-volume, lower-temperature, and lower-water content will allow the VPSA unit to operate more efficiently and effectively on the resultant flue gas stream.

The cooled flue gas enters the VPSA unit and will flow in a radial fashion through a short bed of adsorbent in either a vertical or horizontal configuration, depending upon the particular power plant's requirements. The adsorbent beds will consist of alumina for moisture polishing, and MOF for CO_2 removal. In the VPSA conceptual design at the end of the adsorption step, the vessel first vents N_2 raffinate to the stack to reduce the bed pressure to atmospheric pressure; pressure then equalizes with another vessel that had just completed the vacuum regeneration step. This would reduce the bed pressure to 7 to 8 pounds per square inch absolute (psia). These steps also reduce the N_2 stored in the vessel voids and minimize the amount that would be co-produced with the CO_2. The adsorbent bed would then be evacuated to 0.5 psia to produce the CO_2. For the purposes of the calculations, it was assumed that there was negligible co-adsorption of N_2 on the CO_2-loaded adsorbent and that the N_2 was primarily stored in the voids of the adsorbent vessel. The target CO_2 delta loadings were based on producing a >90 percent CO_2 purity stream during the regeneration step. The parasitic load for regeneration of the adsorbent is the compression energy associated with evacuating the vessel to 0.5 psia and compressing the contents to at least 8.8 pounds per square inch gauge (psig). The contribution of the N_2 stored in the voids is quite small compared to the compression energy associated with desorbing the CO_2. A purge step was not used in this process since the primary concern is producing a high-purity CO_2 stream.

The VPSA evacuation compressor will be used to remove CO_2 streams at 95 to 97 percent purity from the adsorbent beds. The water that comes along with the CO_2 will be removed during the CO_2 compression and drying stage of the process. In order to facilitate the gas compression and drying section CAPEX estimate, the VPSA evacuation compressor discharge pressure is 8.8 psig. This is the same pressure that the Econamine process delivers captured CO_2 to the gas compression and drying section. In the compression section, the CO_2 is compressed to 2,215 psia by a six-stage centrifugal compressor with inter-stage cooling to 100°F. The discharge pressures of the stages were balanced to give reasonable power distribution and discharge temperatures across the various stages. During compression in the multiple-stage, intercooled compressor, the CO_2 stream is dehydrated to a dew point of -40°F with triethylene glycol. The virtually moisture-free supercritical CO_2 stream is delivered to the plant battery limit as sequestration-ready.

There are no heating or cooling steps within the VPSA unit operation, which is typical of VPSA processes. Since this is still a conceptual design, however, there remain other types of processes to consider depending upon future pilot study and other experimental results. In a VPSA process, the heat of adsorption is released and is stored in the bed by a sensible temperature rise. The heat is removed during the desorption step as the adsorbent bed cools. Approximately 90 percent of the CO_2 in the feed gas is adsorbed onto the MOF adsorbent, and the rest leaves the VPSA section to the stack. Further, other than spent adsorbent, there is no waste generated in this process. The MOF-based VPSA process should generate little waste because the adsorbent itself is not hazardous waste, nor is it expected that the MOF will generate any hazardous waste products via degradation.

TABLE 2: ADSORPTION-BASED POST-COMBUSTION CO_2/N_2 SEPARATIONS

	Units	Current R&D Value	Target R&D Value
Sorbent			
True Density @ STP	kg/m^3	0.8	1.0
Bulk Density	kg/m^3		
Average Particle Diameter	mm	0.5 – 2.0	1.0
Particle Void Fraction	m^3/m^3		
Packing Density	m^2/m^3	0.5	0.7
Solid Heat Capacity @ STP	kJ/kg-K	≈ 1	< 1
Crush Strength	kg_f		
Manufacturing Cost for Sorbent	$/kg		

TABLE 2: ADSORPTION-BASED POST-COMBUSTION CO_2/N_2 SEPARATIONS

	Units	Current R&D Value	Target R&D Value
Adsorption			
Pressure	bar	0.1	0.1 – 0.15
Temperature	°C	25 – 45	25 – 45
Equilibrium Loading	g mol CO_2/kg-sorbent		
Heat of Adsorption	kJ/mol CO_2	45	45 – 55
Desorption			
Pressure	bar	0.01 – 0.05	0.05
Temperature	°C	Ambient	Ambient
Equilibrium Loading	g mol CO_2/kg-sorbent		
Heat of Desorption	kJ/mol CO_2		
Proposed Module Design		*(for equipment developers)*	
Flow Arrangement/Operation	-	—-	—-
Flue Gas Flowrate	kg/hr	—-	—-
CO_2 Recovery, Purity, and Pressure	% / % / bar	90–98	
Adsorber Pressure Drop	bar	—-	—-
Estimated Absorber/Stripper Cost of Manufacturing and Installation	$ / kg/hr	—-	—-

Definitions:

STP – Standard Temperature and Pressure (15°C, 1 atm).

Sorbent – Adsorbate-free (i.e., CO_2-free) and dry material as used in adsorption/desorption cycle.

Manufacturing Cost for Sorbent – "Current" is market price of material, if applicable; "Target" is estimated manufacturing cost for new materials, or the estimated cost of bulk manufacturing for existing materials.

Adsorption – The conditions of interest for adsorption are those that prevail at maximum sorbent loading, which typically occurs at the bottom of the adsorption column. These may be assumed to be 1 atm total flue-gas pressure (corresponding to a CO_2 partial pressure of 0.13 bar) and 40°C; however, measured data at other conditions are preferable to estimated data.

Desorption – The conditions of interest for desorption are those that prevail at minimum sorbent loading, which typically occurs at the bottom of the desorption column. Operating pressure and temperature for the desorber/stripper are process-dependent. Measured data at other conditions are preferable to estimated data.

Pressure – The pressure of CO_2 in equilibrium with the sorbent. If the vapor phase is pure CO_2, this is the total pressure; if it is a mixture of gases, this is the partial pressure of CO_2. Note that for a typical pulverized coal (PC) power plant, the total pressure of the flue gas is about 1 atm and the concentration of CO_2 is about 13.2 percent. Therefore, the partial pressure of CO_2 is roughly 0.132 atm or 0.130 bar.

Packing Density – Ratio of the active sorbent area to the bulk sorbent volume.

Loading – The basis for CO_2 loadings is mass of dry, adsorbate-free sorbent.

Flow Arrangement/Operation – Gas-solid module designs include fixed, fluidized, and moving bed, which result in either continuous, cyclic, or semi-regenerative operation.

Estimated Cost – Basis is kg/hr of CO_2 in CO_2-rich product gas; assuming targets are met.

technology advantages

- High CO_2 adsorption capacity.
- Good adsorption/desorption rates.
- Good hydrothermal stability.
- Environmentally friendly.

R&D challenges

- Effects of water, sulfur oxides (SO_x), and nitrogen oxides (NO_x) on the MOF material.
- Need for large vacuum pumps to compress the CO_2 from the outlet of the VPSA.

results to date/accomplishments

- More than 50 MOF materials were evaluated; two were selected for further development and testing. The CO_2 capacity for these MOFs was determined in the presence of water and other contaminants and measured at several temperatures. Hydrothermal stability testing at accelerated conditions was also carried out for these MOFs.
- Mg/DOBDC outperformed all MOF and zeolite materials evaluated, with about 25 wt% CO_2 captured by this MOF at flue gas conditions (≈0.13 atm CO_2 pressure, 311°K).
- UOP's techno-economic analysis indicated that an MOF-based VPSA process has potential to be a less-expensive option than using amines to capture CO_2. Their analysis indicated a 65 percent increase in cost of electricity (COE) compared to a reference power plant without CO_2 capture.

next steps

This project ended on June 30, 2010. The final report was issued in October 2010.

available reports/technical papers/presentations

Carbon Dioxide Removal from Flue Gas Using Microporous Metal Organic Frameworks [PDF-2.7MB] (Oct 2010) Final Technical Report.

Benin, A., et al., "CO_2 Removal from Flue Gas Using Microporous Metal Organic Frameworks," presented at the Annual NETL CO_2 Capture Technology for Existing Plants R&D Meeting, Pittsburgh, Pennsylvania, March 2009. *http://www.netl.doe.gov/publications/proceedings/09/CO2/pdfs/43092%20UOP%20MOF%20sorbent%20%28Benin%29%20public%20version%20mar09.pdf*

DEVELOPMENT OF A DRY SORBENT-BASED POST-COMBUSTION CO_2 CAPTURE TECHNOLOGY FOR RETROFIT IN EXISTING POWER PLANTS

primary project goals

Research Triangle Institute (RTI) developed and tested a carbon dioxide (CO_2) capture process that utilizes a dry sodium carbonate (Na_2CO_3) sorbent that is based on the reaction of Na_2CO_3 with CO_2 and water vapor present in the flue gas from a coal-fired power plant.

technical goals

- Determine the optimal process configuration for the dry carbonate process.
- Construct and demonstrate a bench-scale CO_2 capture process using Na_2CO_3.
- Construct and demonstrate a pilot-scale, dry carbonate process that captures 0.9 tonnes of CO_2/day (1 ton of CO_2/day).
- Demonstrate the long-term chemical and mechanical stability of the sorbent.
- Update the economic analyses of the CO_2 sorbent capture process.
- Develop a commercialization plan for instituting the CO_2 capture process.

technical content

In an effort to develop a pre-pilot scale facility, RTI has been collecting data needed for designing, constructing, and operating the dry sorbent-based capture unit. RTI has designed and constructed a bench-scale heat transfer evaluation unit, shown in Figure 1, which is used to experimentally determine realistic gas and solid circulation rates and overall heat transfer coefficients for new reactor designs. A schematic diagram of the process is shown in Figure 1.

technology maturity:

Bench-Scale/Small Pilot-Scale

project focus:

A Dry Sorbent-Based Post Combustion CO_2 Capture

participant:

RTI International

project number:

FC26-07NT43089

NETL project manager:

José Figueroa
jose.figueroa@netl.doe.gov

principal investigator:

Thomas Nelson
RTI International
tnelson@rti.org

partners:

Arcadis
ADA-ES
BOC
EPA
EPRI
Nexant
Süd-Chemie, Inc

performance period:

3/7/07 – 12/31/09

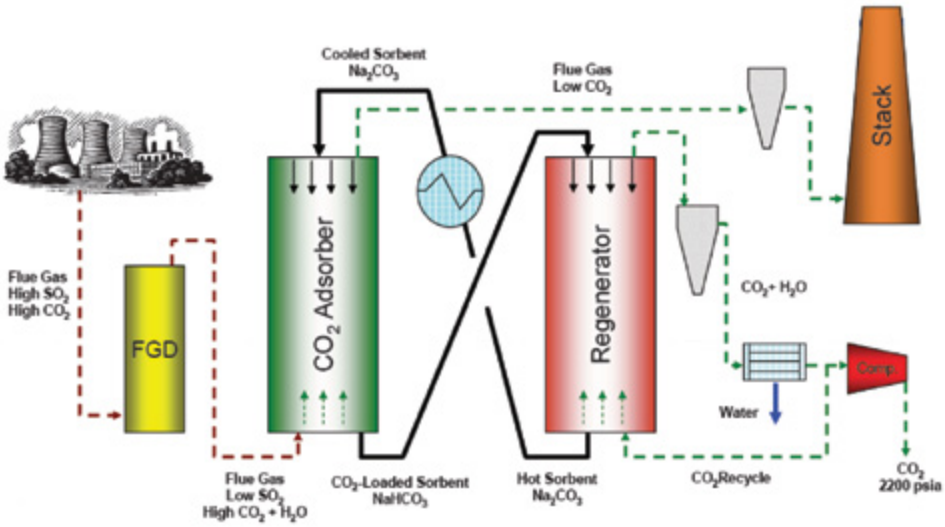

Figure 1: Schematic Diagram of CO_2 Capture Process

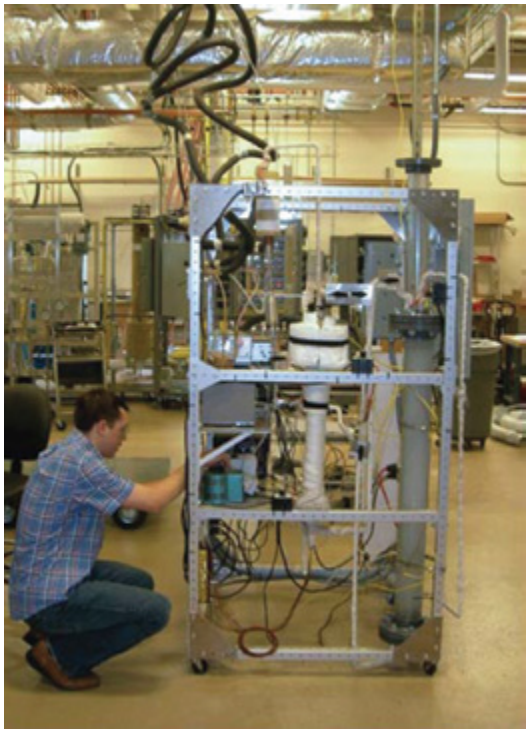

Figure 2: Lab-Scale CO_2 Absorption Reactor Skid

Pilot-scale testing will be performed on a slipstream from the air-blown gasifier at the National Carbon Capture Center (NCCC) in Wilsonville, Alabama. SRI has designed a pilot-scale, continuous, integrated test system. The equipment is being procured and will be assembled. The pilot-scale test will emphasize stability of integrated operation. The effects of trace contaminants will be observed, as the pilot tests will use a gas stream from an operating gasifier that has undergone minimum cleanup and will contain trace contaminants.

The CO_2 capture unit is located after the wet flue gas desulfurization (FGD) unit. The Na_2CO_3 sorbent reacts with the CO_2 and water (H_2O) located in the gas stream through a cyclic temperature swing cycle by adsorbing the CO_2 and H_2O at 60°C and releasing the constituents at 120°C during the sorbent regenerating stage. Considering the high exothermic heat of absorption (3.08 MJ/kg), significant cooling fluid is required to maintain the adsorption temperature at the desired value.

Utilizing the information gathered from the bench-scale unit, as well as the lab-scale unit shown in Figure 2, RTI has developed engineered sorbents that exhibit improved CO_2 capture rate and physical characteristics (e.g., attrition resistance, fluidizibility, and density) over the supported (multi-layer) sorbents. These improvements will have a significant impact on a commercial, dry carbonate system by lowering the solids handling requirements and minimizing the heating and cooling duties in a commercial process. A long-term, multi-cycle testing of these sorbents to demonstrate chemical stability has been undertaken. Initial results indicate that the engineered sorbents are highly stable in the presence of contaminates such as hydrochloric acid (HCl), nitrous oxides (NO_x), H_2O, and oxygen (O_2). While sulfur dioxide (SO_2) forms irreversible chemical bonds to the sorbent, it is considered a minor issue, considering the rate of attrition is generally greater than the rate of deactivation due to SO_2.

TABLE 1: PHYSICAL PROPERTIES OF SODIUM CARBONATE SORBENTS

Property	Value
Bulk Density	1.0 – 1.1 g/mL
Average Particulate Size	65 – 75 µm
Surface Area	100 – 120 m^2/g
Physical Strength (A)	0.77
Na_2CO_3 Strength	10 – 40 wt%
Heat of Absorption	3.08 MJ/kg
Regeneration Energy	3.08 MJ/kg

The heat transfer experiments will be conducted in a fluidized bed contactor, as shown in Figure 2. The conveyors (one heated, the other cooled) will be used to move the Na_2CO_3 through the fluidized bed to introduce a simulated flue gas (from coal or natural gas) to the sorbent. The instrument is used to analyze the adsorption effectiveness and the attrition rate of the Na_2CO_3 sorbent. Data from the fluidized bed will be used to validate and develop the computational fluid dynamic (CFD) model called MFIX.

Some physical properties of the sorbent are provided in Table 1.

As seen in the aforementioned table, the theoretical maximum CO_2 loading for the sorbent is ≈40 wt%. While RTI has achieved loading as high as 30 wt%, it requires a cycle time much greater than would be practical. Allowing only 30 minutes per cycle phase results in loading capacities of ≈20 to 25 percent.

technology advantages

- Lower capital and operating costs for CO_2 removal.
- Sorbent is inexpensive and easy to acquire (≈$200/ton).
- Sorbent is non-hazardous, non-toxic, and does not produce hazardous waste.

R&D challenges

- Circulation of solids may be problematic.
- The reaction of Na_2CO_3 with H_2O is highly exothermic and requires effective heat transfer.
- Removal of CO_2 requires equimolar amounts of H_2O.
- Irreversible reactions of Na_2CO_3 with SO_2 and HCl during process conditions.
- Raw Na_2CO_3 is not a physically strong material, leading to high attrition rates.
- Raw Na_2CO_3 agglomerates upon contact with condensed H_2O.

results to date/accomplishments

- Constructed a heat transfer evaluation system used to evaluate the hydrodynamics and heat transfer characteristics of the reactor designs.
- Constructed a packed-bed reactor system to demonstrate sorbent stability over many adsorption and regeneration cycles and provide insight into reaction kinetics.
- Validated the operation of a bench-scale, coupled cold-flow system and collected data on gas-solid contactor bed height control, range of operability, sorbent bed densities, bed void volumes, and fluidization characteristics.
- Measured the heat transfer limitations of the existing screw conveyor system and determined that the screw conveyors cannot be used for sorbent regeneration in a 1-ton/day CO_2 capture pre-pilot system.
- Developed updated process simulations for the new dry carbonate process design using ASPEN Plus.

next steps

This project ended on December 31, 2009. The final report was completed in April 2010.

available reports/technical papers/presentations

Development of a Dry Sorbent-Based Post Combustion CO_2 Capture Technology for Retrofit in Existing Power Plants – Final Report – April 2010.

Nelson, T., et al., "Development of a Dry Sorbent-Based Post Combustion CO_2 Capture Technology Retrofit in Existing Power Plants," presented at the Annual NETL CO_2 Capture Technology for Existing Plants R&D Meeting, Pittsburgh, Pennsylvania, March 2009. *http://www.netl.doe.gov/publications/proceedings/09/CO2/pdfs/43089%20RTI%20sorbent%20%28Nelson%29%20mar09.pdf*.

The Dry Carbonate Process: Carbon Dioxide Recovery from Power Plant Flue Gas, 7th Annual Conference on Carbon Capture and Sequestration in Pittsburgh, Pennsylvania, May 2008.

The Dry Carbonate Sorbent Technology for CO_2 Removal from Flue Gas of Existing Coal-Fired Power Plants – Power Plant Air Pollutant Control "Mega" Symposium in Baltimore, Maryland, August 2008.

Development of a Dry Sorbent-Based Post Combustion CO_2 Capture Technology for Retrofit in Existing Power Plants Fact Sheet, April 2008.

Carbon Dioxide Capture from Flue Gas Using Dry Regenerable Sorbents, Topical Report, November 2004.

APPENDIX B: CARBON DIOXIDE CAPTURE TECHNOLOGY SHEETS

POST-COMBUSTION MEMBRANES

ELECTROCHEMICAL MEMBRANE FOR CARBON DIOXIDE CAPTURE & POWER GENERATION

technology maturity:
Bench-Scale, Simulated Flue Gas

project focus:
Electrochemical Membrane

participant:
FuelCell Energy

project number:
FE0007634

NETL project manager:
Jose Figueroa
jose.figueroa@netl.doe.gov

principal investigator:
Hossein Ghezel-Ayagh
FuelCell Energy, Inc.
hghezel@fce.com

partners:
URS Corporation
Pacific Northwest National Laboratory

performance period:
10/1/11 – 3/31/2015

primary project goals

FuelCell Energy, Inc. (FCE) is developing an electrochemical membrane (ECM)-based Combined Electric Power and Carbon Dioxide Separation (CEPACS) system for carbon dioxide (CO_2) capture that also provides additional electrical power generation. The project includes bench-scale testing of an 11.7 m^2-area ECM (molten carbonate fuel cell) system for CO_2 capture, purification, and compression.

technical goals

- Perform contaminant effect testing to establish maximum permissible concentrations of impurities in flue gas without causing unacceptable degradation of the ECM.
- Perform bench-scale membrane tests using clean, simulated flue gas.
- Complete design of balance-of-plant (BOP) components, including flue gas pretreatment subsystem.

technical content

FCE, in collaboration with Pacific Northwest National Laboratory (PNNL) and URS Corporation, is developing a novel CEPACS system. The CEPACS system is based on FCE's ECM technology derived from their internal reforming carbonate fuel cell products carrying the trade name of Direct FuelCell® (DFC®). The prominent feature of the ECM is its capability to produce electric power while capturing CO_2 from the flue gas of a pulverized coal (PC) power plant, resulting in a net efficiency gain. The ECM does not require flue gas compression as it operates on the principle of electrochemistry. The membrane utilizes a supplemental fuel (such as coal-derived synthesis gas [syngas], natural gas, or a renewable resource) as the driver for the combined CO_2 capture and electric power generation. The ECM consists of ceramic-based layers filled with carbonate salts that separate CO_2 from the flue gas. Because of the electrode's fast reaction rates, the membrane does not require a high CO_2 concentration in its feed gas. Advancement of the ECM technology will be achieved by a combination of small-scale component fabrication and testing, contaminant pretreatment evaluation, and bench-scale testing of an 11.7-m^2 ECM separation unit with CO_2 compression and chilling.

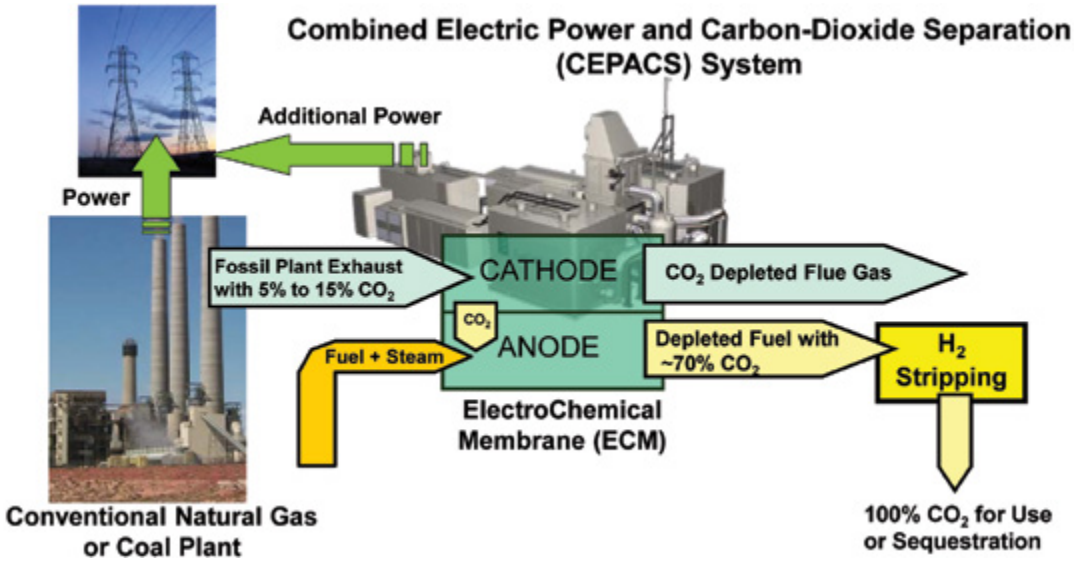

Figure 1: CEPACS System

TABLE 1: PROCESS PARAMETERS

	Units	Current R&D Value	Target R&D Value
Materials Properties			
Materials of Fabrication for Selective Layer	-	Alkali Carbonate/$LiAlO_2$	
Materials of Fabrication for Support Layer	-	Stainless Steel	
Nominal Thickness of Selective Layer	µm	600	600
Membrane Geometry	-	Planar	Planar
Max Trans-Membrane Pressure	bar	<0.1	<0.1
Hours Tested Without Significant Degradation	-	1,000	6,000
Manufacturing Cost for Membrane Material	$/m^2	100	100
Membrane Performance			
Temperature	°C	650	650
Volumetric Flux*	GPU or equivalent	0.009 cc/s/cm^2 @ STP (1 atm, 0°C)	0.010 cc/s/cm^2 @ STP (1 atm, 0°C)
CO_2/H_2O Selectivity	-	Infinity	Infinity
CO_2/N_2 Selectivity	-	Infinity	Infinity
CO_2/SO_2 Selectivity	-	Not Available	Not Available
Type of Measurement	-	Mixed	Mixed
Proposed Module Design			
Flow Arrangement	-	Cross Flow	
Packing Density	m^2/m^3	16	
Shell-Side Fluid	-	Retentate	
Flue Gas Flowrate	kg/hr	4640	
CO_2 Recovery, Purity, and Pressure	% / % / bar	90%, 99.7%, 1 bar	
Pressure Drops Shell/Tube Side	bar	0.025/.01	
Estimated Absorber/Stripper Cost of Manufacturing and Installation	$ / kg/hr	550	

Definitions:

Membrane Geometry – Flat discs or sheets, hollow fibers, tubes, etc.

Pressure Normalized Flux – For materials that display a linear dependence of flux on partial pressure differential, this is equivalent to the membrane's permeance.

**GPU* – Gas Permeation Unit, which is equivalent to 10^{-6} cm^3 (1 atm, 0°C)/cm^2/s/cm Hg. For non-linear materials, the dimensional units reported should be based on flux measured in cm^3 (1 atm, 0°C)/cm^2/s with pressures measured in cmHg. Note: 1 GPU = 3.3464×10^{-6} kg mol/m^2-s-kPa [SI units]. Volumetric flux, rather than permeance, is considered a major performance parameter for the ECM. Permeance generally applies to membranes that use pressure or partial pressure as the driving force. In the case of ECM, the driving force is the electrochemical potential.

Type of Measurement – Either mixed or pure gas measurements; target permeance and selectivities should be for mixture of gases found in de-sulfurized flue gas.

Flow Arrangement – Typical gas-separation module designs include spiral-wound sheets, hollow-fiber bundles, shell-and-tube, and plate-and-frame, which result in either co-current, counter-current, cross-flow arrangements, or some complex combination of these.

Packing Density – Ratio of the active surface area of the membrane to the volume of the module.

Shell-Side Fluid – Either the permeate (CO_2-rich) or retentate (flue gas) stream.

Estimated Cost – Basis is kg/hr of CO_2 in CO_2-rich product gas; assuming targets are met.

Other Parameter Descriptions:

Membrane Permeation Mechanism – The operating principle of ECM is shown in Figure 2, along with the electrochemical reactions involved. The ECM is composed of a thin matrix layer of ceramic material (Lithium Aluminate), with two electrodes (anode and cathode) on each side. The membrane is impregnated with a mixture of alkali metal (Li/Na/K) carbonate electrolyte, which constitutes a molten phase immobilized in the ECM pores at the operating temperature of 550 to 650°C. The anode and cathode are porous to allow gas diffusion. The inner matrix layer is completely filled with electrolyte and is impervious to gas transport while providing a path for ionic transfer across the membrane. Carbon dioxide and oxygen present in the flue gas of a coal power plant are used as reactants at the cathode. The ECM utilizes hydrogen (H_2) at the anode. The hydrogen is made available to the anode by a mixture of a fuel (such as natural gas, syngas, or biogas) and steam. The hydrocarbon content of the fuel is internally steam reformed to produce hydrogen in the anode chamber.

The electrochemical reactions (Figure 2) involve the formation of carbonate ions (CO_3^{2-}) at the cathode by the combination of O_2, CO_2, and two electrons; transport of the carbonate ions to the anode through electrolyte; and finally, reaction of the carbonate ion with H_2 at the anode, producing H_2O, CO_2, and two electrons. The internal transport of carbonate ions in an ECM assembly (or cell) and the flow of electrons in the external circuit results in electric power generation as a consequence of the electrochemical CO_2 separation process. DC power produced is converted to AC power using an inverter. Overall, the operating mechanism of the ECM cell results in the separation (from flue gas) and transfer of CO_2 into the anode exhaust stream, which has a much reduced volumetric flow rate (resulting in a CO_2-rich stream) compared to the original flue gas stream.

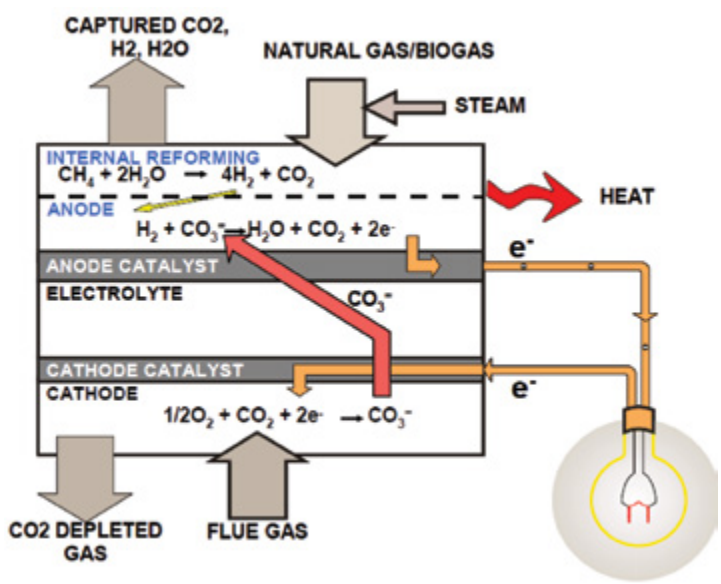

Figure 2: Separation of CO_2 in the Electrochemical Membrane Cell

Contaminant Resistance – The ECMs may be susceptible to certain levels of flue gas contaminants, especially sulfur oxide (SO_x). It is anticipated that other flue gas contaminants, such as nitrogen oxide (NO_x) and mercury, have no or minimal impact on the membrane performance. Laboratory tests have indicated that ECM has the potential for control of 60 to 70 percent of the NO_x species present in the flue gas of a coal power plant. Further testing of membranes is planned to characterize the ECM tolerance limits to various flue gas contaminants and to quantify its NO_x control capabilities.

Flue Gas Pretreatment Requirements – Flue gas entering the CEPACS plant is first routed through a polishing wet limestone flue gas desulfurization (FGD) system to further remove SO_x contaminants. The cleaned flue gas is then mixed with supplemental air. This serves to raise the oxygen partial pressure in the stream for proper operation of ECM modules. The mixed stream is preheated to the ECM operating temperature of ≈650°C using waste heat available in the system.

Membrane Replacement Requirements – The CEPACS is designed with the ECM modules replacement after 10 years of operation. Therefore, ECM modules are required to be replaced twice during the 30-year lifetime of the CEPACS plant.

Waste Streams Generated – The CEPACS plant produces minimal waste streams. Since water is generated by the electrochemical reactions within the ECM module, the system generates excess clean process water. This excess process water can be utilized in the existing PC plant to reduce raw water consumption. The polishing FGD generates a waste stream that is treated in the existing PC plant dewatering and water treatment equipment.

technology advantages

- Unlike other scrubber and membrane-based CO_2 capture technologies, the ECM-based CEPACS system produces additional electric power, rather than consuming power, using a supplemental fuel.
- The net efficiency of a CEPACS-equipped PC plant with >90 percent CO_2 capture is estimated to be ≈8 percent higher than the net efficiency of a baseline PC plant without CO_2 capture.
- The ECM technology is anticipated to reduce flue gas NO_x emissions by 60 to 70 percent.
- The ECM is a modular technology, allowing for phased addition of CO_2 capture capacity over time.
- The ECM-based CEPACS system has the potential to significantly reduce the cost of CO_2 capture.
- The CEPACS system generates excess clean water as part of the electrochemical separation process.

R&D challenges

- Contaminant tolerance of ECM technology must be characterized via testing.
- The membrane capability to separate 90 percent of CO_2 from PC plant flue gas at low-partial pressures needs to be verified in a bench-scale ECM module.
- The CEPACS process design needs to be demonstrated at large-scale.
- Membrane operational characteristics need to be investigated with consideration for minimization of the system cost.

results to date/accomplishments

- A preliminary technical and economic feasibility study (PT&EFS) was completed for a CEPACS system to separate 90 percent of CO_2 from the flue gas of a reference plant (550-MW PC).
  - The reference plant equipped with CEPACS has the potential for achieving the U.S. Department of Energy incremental cost of electricity target of 35 percent. It has the lowest total overnight cost (TOC of $2,200/kW) and the highest overall efficiency (39.8 percent HHV) among the alternative systems studied.
  - The reference plant equipped with CEPACS has low cooling water consumption per unit of electricity produced. It reduces the process water consumption of the reference plant due to water-producing capabilities of the ECM operating inherently as a fuel cell.
  - The reference plant equipped with CEPACS has a cost of CO_2 captured of approximately $14/ton of CO_2, which is the lowest among the alternatives studied.

next steps

- Perform laboratory and sub-scale ECM testing to characterize effects of flue gas contaminants on membrane performance.
- Quantify the NO_x control efficiency of the ECM.
- Perform membrane testing to optimize CEPACS system performance.
- Develop the design of a flue-gas pretreatment system required to reduce the contaminants down to tolerable levels prior to introduction of flue gas into the ECM module.
- Complete the technology gap analysis for identifying the equipment, material, or other components that would hinder advancement of the technology to a commercial product for CO_2 capture at a competitive cost.
- Update the PT&EFS as a result of the flue gas cleanup evaluation and sub-scale membrane-testing results.
- Construct a 11.7-m^2 membrane module bench-scale test facility and evaluate ECM performance using simulated flue gas.

available reports/technical papers/presentations

H. Ghezel-Ayagh, "Electrochemical Membrane for CO_2 Capture and Power Generation No. DE-FE0007634 FuelCell Energy, Inc.," presented at the 2012 NETL CO_2 Capture Technology Meeting, Pittsburgh, Pennsylvania, July 2012.

H. Ghezel-Ayagh, S. Jolly, D. Patel, W. A. Steen, C. F. Richardson, and O. A Marina, "Electrochemical Membrane for Carbon Dioxide Capture and Power Generation," presented at the 11th Annual Conference on Carbon Capture Utilization & Sequestration, Pittsburgh, Pennsylvania, April 30 – May 3, 2012.

J. Hunt, C. Willman, H. Ghezel-Ayagh, P. Singh, "Carbon Capture from the Industrial Sites Using a High Temperature Ionic Membrane," presented at the 11th Annual Conference on Carbon Capture Utilization & Sequestration, Pittsburgh, Pennsylvania, April 30 - May 3, 2012.

H. Ghezel-Ayagh, J. Hunt, S. Jolly, D. Patel, and R. Sanderson, "Energy Sustainability through Combined Electric Power Production and Carbon-Dioxide Separation (CEPACS) Systems," ECS Transactions, Editor(s): M. Williams, Volume 42, Issue No. 1, pp. 23-29, 2011.

H. Ghezel-Ayagh," Electrochemical Membrane for Carbon Dioxide Capture and Power Generation," International Colloquium on Environmentally Preferred Advanced Power Generation (ICEPAG) Costa Mesa, CA, February 7-9, 2012.

NOVEL INORGANIC/POLYMER COMPOSITE MEMBRANES FOR CO_2 CAPTURE

primary project goals

Ohio State University is developing an inorganic/polymer composite membrane consisting of a thin, selective inorganic layer embedded in a polymer structure. The project includes development of a new membrane design to improve system performance through laboratory- and bench-scale testing and decrease costs through development of a continuous manufacturing process.

technical goals

- Develop membrane synthesis process that incorporates a thin, selective inorganic layer embedded in a polymer structure into spiral-wound modules.
  - Membranes will be developed and down-selected for a carbon dioxide (CO_2)/nitrogen (N_2) and H_2O/N_2 selectivity of >100 and a CO_2 permeance of >2,500 gas permeation units (GPU).
  - Continuous fabrication of the proposed hybrid membrane morphology will be performed with the use of a continuous membrane fabrication machine.
- Conduct membrane characterization via bench-scale testing.
  - Functional hybrid membranes will be synthesized for incorporation into three prototype membrane modules for parametric and continuous testing with simulated or actual flue gas.
- Complete system and cost analysis of the membrane system.

technical content

Ohio State University is developing a cost-effective design and manufacturing process for new membrane modules that capture CO_2 from flue gas. The membranes consist of a thin, selective inorganic layer embedded in a polymer structure so that it can be made in a continuous manufacturing process. The membrane will be incorporated in spiral-wound modules for bench-scale tests using coal-fired flue gas. Preliminary cost calculations show that a single-stage membrane process is economically unfavorable, primarily because of the low concentration of CO_2 (≈14%) in the flue gas stream. A two-stage process is more economical, but requires plant operation with a CO_2-enriched recycle stream.

technology maturity:

Bench-Scale, Using Simulated and Actual Flue Gas

project focus:

Inorganic/Polymer Composite Membrane

participant:

Ohio State University

project number:

FE0007632

NETL project manager:

Jose Figueroa
jose.figueroa@netl.doe.gov

principal investigator:

Dr. Winston Ho
Ohio State University
ho@chbmeng.ohio-state.edu

partners:

Gradient Technologies
Trisep Corporation
AEP

performance period:

10/1/11 – 3/31/2015

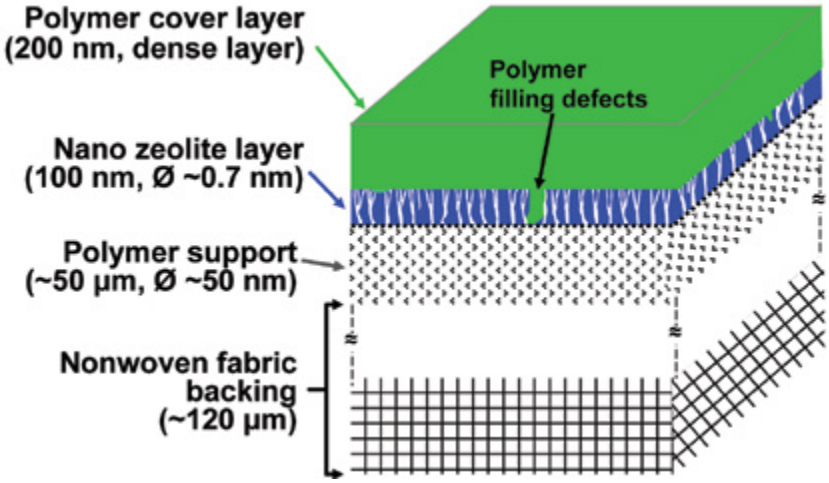

Figure 1: Supported Hybrid Membrane Concept

An important cost driver in current carbon capture membrane technologies is the energy requirement for maintaining the driving force for the membrane separation. The flue gas must be kept at atmospheric pressure and the concentrated CO_2 stream kept under vacuum (approximately three pounds per square inch [psi]) conditions. Preliminary calculations show that the carbon capture energy requirement can be sufficiently reduced in a two-stage process. In the first stage, CO_2 is removed from flue gas by evacuation; in the second stage, remaining CO_2 is removed using an air sweep such that the 90 percent capture target is met.

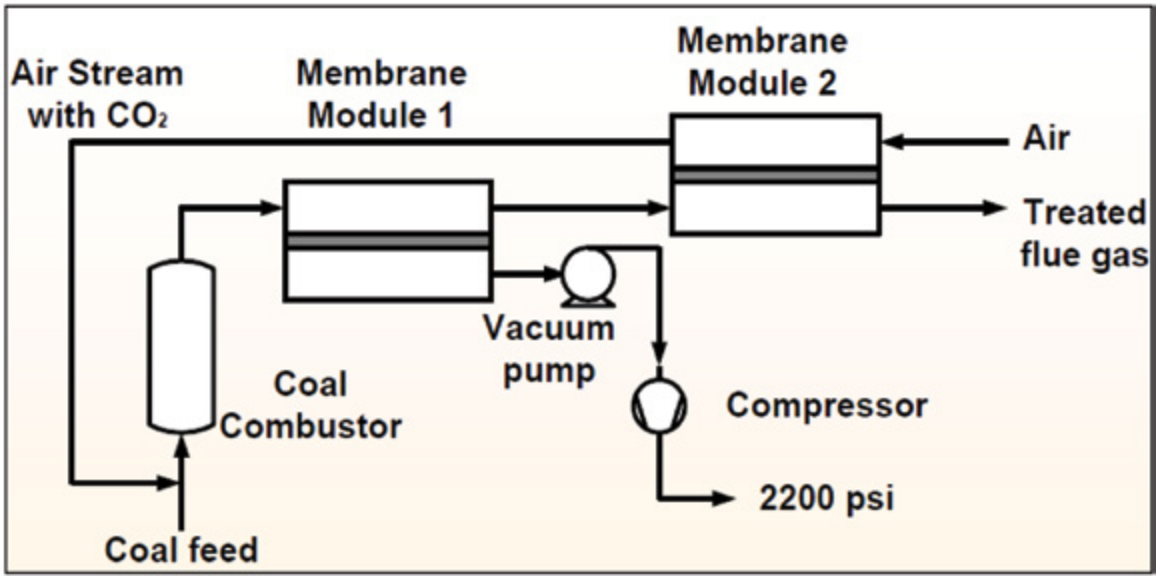

Figure 2: Process Concept for Two-Stage Membrane System

The entrance air sweep flow is the same as the air used in the current plant; the CO_2-enriched stream is used for combustion. The 95 percent pure CO_2, captured in the first stage, is then compressed to 15 MPa (≈2,200 psi). The U.S. Department of Energy cost targets can be met with a membrane that has a selectivity ≈150, a permeance of 3,000 GPU, and full stability against flue gas contaminants. This combination cannot be achieved with fully polymeric membranes. Fully inorganic, micro-porous membranes are sufficiently selective and stable, but generally too expensive due to high manufacturing costs. A design that combines favorable inorganic membrane selectivity with the cost-effectiveness of polymer processing in continuous mode will be the focus. The micro-porous membranes are aluminosilicates. Fully inorganic structures have CO_2/N_2 selectivities of >200, and permeances of <300 GPU. The latter can be improved by reducing membrane thickness, in combination with defect abatement with a thin polydimethylsiloxane (PDMS) layer. In the membrane compositions, zeolite Y layers can be grown from solutions at 95°C. Zeolite Y exhibits better properties but requires long growth time, which needs to be reduced to minutes. Indications are good that the growth time can be shortened significantly and that the membrane system can be deposited on available polyethersulfone or polysulfone supports.

TABLE 1: PROCESS PARAMETERS

	Units	Current R&D Value	Target R&D Value
Materials Properties			
Materials of Fabrication for Selective Layer	-	Zeolites	
Materials of Fabrication for Support Layer	-	Polyethersulfone or polysulfone on non-woven fabric	
Nominal Thickness of Selective Layer	nm	200 – 500	50 – 150
Membrane Geometry	-	Flat sheet	Spiral-wound sheet
Max Trans-Membrane Pressure	bar	Can be 50	0.2 – 1.5
Hours Tested Without Significant Degradation	-	30 hrs	200 hrs
Manufacturing Cost for Membrane Material	$/m^2	50	15
Membrane Performance			
Temperature	°C	100°C	57°C
CO_2 Pressure Normalized Flux	GPU or equivalent	1,100 GPU	>2,500 GPU
CO_2/H_2O Selectivity	-	Not yet determined	Not yet determined
CO_2/N_2 Selectivity	-	$\alpha = 800$ for 20 CO_2/80 N_2 with ptot = 101 kPa	$\alpha > 100$ for flue gas conditions
CO_2/SO_2 Selectivity	-	Not yet determined	Not yet determined
Type of Measurement	-	Mixed gas	Mixed gas
Proposed Module Design			
Flow Arrangement	-	Countercurrent	
Packing Density	m^2/m^3	About 2000	
Shell-Side Fluid	-	Air sweep	
Flue Gas Flowrate	kg/hr	About 200	
CO_2 Recovery, Purity, and Pressure	% / % / bar	>90%, >95%, 0.2 – 1.2 bar	
Pressure Drops Shell/Tube Side	bar	About 0.05/0.05	
Estimated Absorber/Stripper Cost of Manufacturing and Installation	$\frac{\$}{kg/hr}$	About 90	

Definitions:

Membrane Geometry – Flat discs or sheets, hollow fibers, tubes, etc.

Pressure Normalized Flux – For materials that display a linear dependence of flux on partial pressure differential, this is equivalent to the membrane's permeance.

GPU – Gas Permeation Unit, which is equivalent to 10^{-6} cm^3 (1 atm, 0°C)/cm^2/s/cm Hg. For non-linear materials, the dimensional units reported should be based on flux measured in cm^3 (1 atm, 0°C)/cm^2/s with pressures measured in cm Hg. Note: 1 GPU = 3.3464×10^{-6} kg mol/m^2-s-kPa [SI units].

Type of Measurement – Mixed gas measurements; target permeance and selectivities should be for mixture of gases found in desulfurized flue gas.

Flow Arrangement – Typical gas-separation module designs include spiral-wound sheets, hollow-fiber bundles, shell-and-tube, and plate-and-frame, which result in either co-current, counter-current, cross-flow arrangements, or some complex combination of these.

Packing Density – Ratio of the active surface area of the membrane to the volume of the module.

Shell-Side Fluid – Either the permeate (CO_2-rich) or retentate (flue gas) stream.

Estimated Cost – Basis is kg/hr of CO_2 in CO_2-rich product gas; assuming targets are met.

Other Parameter Descriptions:

Membrane Permeation Mechanism – Surface adsorption and diffusion and molecular sieving for the zeolite selective layer; solution-diffusion for the polymer cover layer.

Contaminant Resistance – Fully resistant polymer and inorganic materials.

Flue Gas Pretreatment Requirements – Removal of particulates, possibly dehydration.

Membrane Replacement Requirements – Estimated approximately four years.

Waste Streams Generated – N_2 with H_2O, <1 percent CO_2 and minor impurities.

technology advantages

Cost-effective separation principle.

R&D challenges

Synthesis and scale-up of sufficiently selective and permeable membranes.

results to date/accomplishments

- Membrane synthesis:
  - Zeolite/polymer composite membranes showed a CO_2 permeance of 1,100 GPU and a CO_2/N_2 selectivity of >200.
  - Achieved deposition of zeolite Y on polyethersulfone support.
  - Significant membrane synthesis improvements were made, including: (1) discovery of rapid zeolite synthesis (< one hour) for continuous membrane fabrication; (2) inorganic/organic spiral-wound membrane element; and (3) ceramic membrane processing also improved (20 minutes in lieu of 43 hours), but membrane performance poor.
  - The membrane process without cryogenic distillation was selected for development.
- Membrane characterization analyses:
  - Conducted electron microscopy of 2-D focused ion beam (FIB) cross-sections.
  - Tested membrane transport using the mixed gas simulating flue gas CO_2, N_2, and H_2O concentrations.
  - Obtained X-ray diffraction (XRD) patterns indicative of zeolite formation.
  - Characterized zeolite nanoparticles by dynamic light scattering (DLS) and transmission electron microscopy (TEM) for particle size.
  - Characterized zeolites by nuclear magnetic resonance spectroscopy (NMR) for silicon (Si)/aluminum (Al) ratio.
- System and cost analysis:
  - Completed the preliminary system model in Aspen.
  - Used the model to conduct preliminary techno-economic calculations.
  - Preliminary techno-economic calculations (1,026 GPU and >150 selectivity) showed ≈46.1% cost of electricity increase and ≈$31.2/tonne CO_2.

next steps

- Membrane synthesis:
  - Growth of thin, selective zeolite Y layers.
  - Optimization/improvement of zeolite and polymer layer depositions.
  - Membrane scale-up using continuous membrane fabrication machine.
- Membrane characterization analyses:
  - Characterization of transport properties of lab and scale-up membranes using the mixed gas simulating flue gas CO_2, N_2, and H_2O concentrations.
  - Competitive H_2O/CO_2 transport studies.
  - Complete TEM FIB films.
  - Characterization of zeolites synthesized by XRD, DLS, NMR, and TEM.
- System and cost analysis:
  - Continuation of system studies.
  - Update of preliminary techno-economic calculations using improved membrane transport data.
  - Environmental health and safety evaluation.

available reports/technical papers/presentations

Verweij, H., "Novel Inorganic/Polymer Composite Membranes for CO_2 Capture," presented at the 2012 NETL CO_2 Capture Technology Meeting, Pittsburgh, Pennsylvania, July 2012. *http://www.netl.doe.gov/File%20Library/events/2012/co2%20capture%20meeting/H-Verweij-OSU-Composite-Membranes.pdf*.

MEMBRANE PROCESS TO CAPTURE CARBON DIOXIDE FROM COAL-FIRED POWER PLANT FLUE GAS

technology maturity:

Pilot-Scale, Actual Flue Gas (equivalent to 1 MW)

project focus:

Polymeric Membranes

participant:

Membrane Technology & Research Inc.

project number:

FE0005795, DE-NT0005312, and FC26-07NT43085

NETL project manager:

José Figueroa
jose.figueroa@netl.doe.gov

principal investigator:

Tim Merkel
Membrane Technology & Research, Inc.
tcmerkel@mtrinc.com

partners:

Arizona Public Service
Babcock & Wilcox
EPRI
Helios-NRG
Southern Company/NCCC
Worley Parsons

performance period:

4/1/07 – 9/30/15

primary project goals

Membrane Technology & Research, Inc. (MTR) is developing a polymeric membrane and associated process for carbon dioxide (CO_2) capture. The project includes conducting slipstream (0.05 MWe) and small pilot-scale (1 MWe) field tests using full-scale commercial membrane modules to treat combustion flue gas at the National Carbon Capture Center (NCCC).

technical goals

- Develop a thin film, composite, polymer-based membrane to increase CO_2 permeance while maintaining CO_2/nitrogen (N_2) selectivity.
- Develop a countercurrent sweep membrane module design using incoming combustion air to generate separation driving force and reduce the need for vacuum pumps and the associated parasitic energy cost.
- Fabricate commercial-scale membrane modules that meet low pressure-drop and high packing-density performance targets.
- Conduct slipstream field testing of a membrane system at NCCC; the system will process 7,000 standard m^3/day (0.25 MMscfd) of flue gas (equivalent to approximately 0.05 MWe), separating about one tonne of CO_2/day.
- Further scale-up the process in order to conduct a six-month small pilot-scale field test of a membrane system at a coal-fired power plant (equivalent to approximately 1 MWe, or about 20 tonne of CO_2/day).
- Analyze the performance of the membrane system, determine how it would be best integrated with a coal-fired power plant, and prepare a comparative economic analysis of the membrane-based CO_2 capture process versus other capture technologies.

technical content

MTR is developing composite membranes with high CO_2 permeance and high CO_2/N_2 selectivity for post-combustion flue gas applications. Tests indicate the membrane has 10 times the CO_2 permeance of conventional gas separation membranes. The combination of these membranes with a novel countercurrent module design that utilizes incoming combustion air to generate separation driving force greatly reduces the projected cost of CO_2 capture. MTR is developing a commercial-scale membrane module that can meet low pressure-drop and high packing-density performance targets. This thin-film membrane utilizes hydrophilic polymers and is known by the trade name "Polaris™."

Polaris™ membranes will be used in a novel two-step membrane process design, as shown in Figure 1. The process includes two types of membrane arrangements: a conventional cross-flow module and a novel countercurrent sweep module. First, the combustion flue gas enters a cross-flow module, which removes most of the CO_2. The retentate from the cross-flow module is then fed into a countercurrent sweep module, from which the permeate is

recycled back to the boiler via an air sweep, which increases the CO_2 concentration of the flue gas entering the initial cross-flow module. The CO_2-rich permeate from the cross-flow module is then dehydrated and compressed. A second-stage cross-flow module is used after compression to further enrich the CO_2 stream by recycle of the permeate back to the inlet of the compressor.

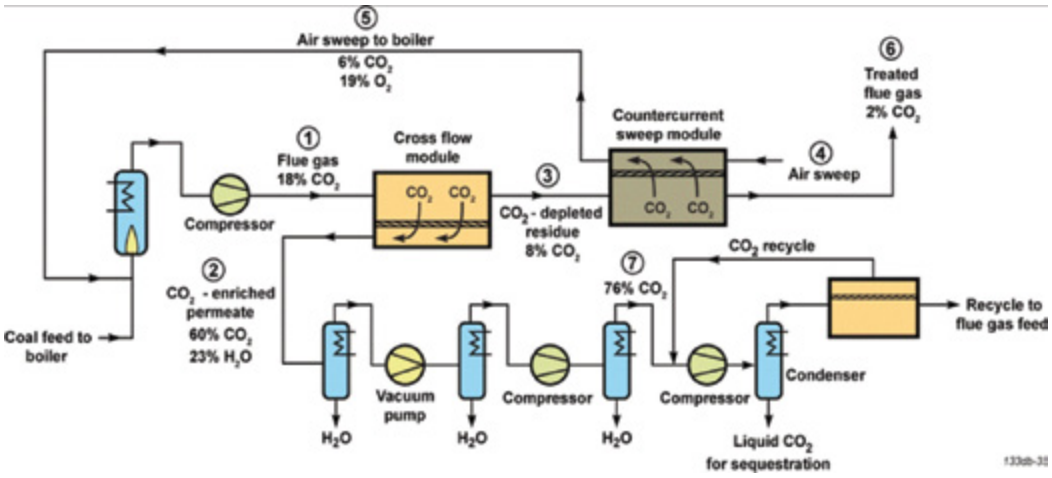

Figure 1: Process Design for the Membrane System

Polaris™ membranes will be packed into spiral-wound membrane modules, the most commonly used module design for commercial membrane installations today. Spiral-wound modules are robust, resistant to fouling, and economical; they are used in 95 percent of the reverse osmosis (RO) desalination industry and more than 60 percent of the membrane market for CO_2 removal from natural gas. Figure 2 shows the general design features of a spiral-wound membrane module. The module consists of a permeate collection tube with a spiral formation of permeate spacers and feed spacers, which allow the flue gas and separated CO_2 to flow through the device.

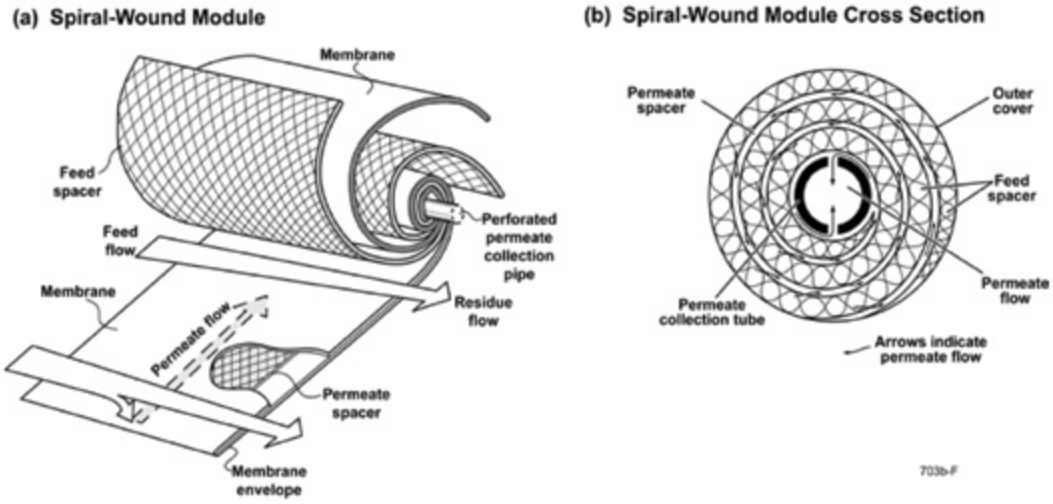

Figure 2: Schematic Diagram of a Spiral-Wound Membrane Module

MTR estimates that a total membrane area of about 0.5 million m^2 is required to achieve 90 percent CO_2 capture for a 550-MWe plant using this process design and would consume approximately 20 to 25 percent of the plant's gross power output. Figure 3 shows a proposed design for a full-scale membrane system. Each set of modules would be stacked on a skid and connected together to form a single "mega-module." About 130 mega-module skids would be required for a 550-MWe power plant (current RO plants already use similar numbers of modules and module skids).

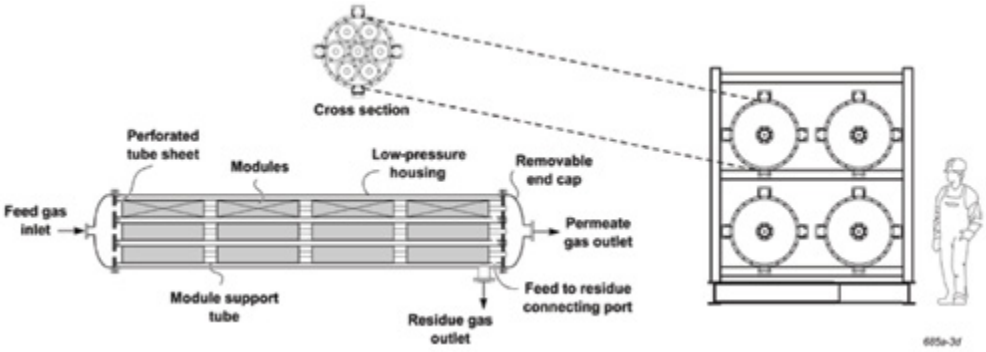

Figure 3: Proposed Design for Full-Scale Membrane System

Figure 4 shows the membrane skid used for the pilot-scale slipstream test at the coal-fired Cholla Power Plant operated by APS. The skid can hold up to eight (four cross-flow and four countercurrent sweep), 8-inch diameter Polaris™ membrane modules. The membrane skid is designed to capture one tonne of CO_2 per day from a 7,000 standard m^3/day (250,000 scfd) flue gas slipstream. The test is demonstrating membrane operation in commercial-scale modules and will determine typical membrane lifetimes under coal combustion flue gas operating conditions.

Figure 4: Membrane Skid Used for 1-TPD Pilot-Scale Slipstream Testing at NGCC

TABLE 1: MEMBRANE PROCESS PARAMETERS

	Units	Current R&D Value	Target R&D Value
Materials Properties			
Materials of Fabrication for Selective Layer		Proprietary polymer	
Materials of Fabrication for Support Layer		Proprietary polymer	
Nominal Thickness of Selective Layer	µm	<1	<1
Membrane Geometry		spiral	spiral
Maximum Trans-Membrane Pressure	bar	70	70
Hours Tested Without Significant Degradation		1,000 (coal)	5,000 (coal)
Manufacturing Cost for Membrane Material	$/m^2		
Membrane Performance			
Temperature	°C	30	30
CO_2 Pressure Normalized Flux	GPU or equivalent	1,500	>2,500
CO_2/H_2O Selectivity	-		
CO_2/N_2 Selectivity	-	25	25
CO_2/SO_2 Selectivity	-		
Type of Measurement	ppm	mixed	mixed
Proposed Module Design			
Flow Arrangement	-	Crossflow and countercurrent	
Packing Density	m^2/m^3	1,000	
Shell-Side Fluid	-	N/A	
Flue Gas Flowrate	kg/hr	500	
CO_2 Recovery, Purity, and Pressure	% / % / bar	90%, >96%, 140 bar	
Pressure Drops Shell/Tube Side	% / % / bar	Feed: <0.05 / Sweep: 0.2	
Estimated Module Cost of Manufacturing and Installation	$ / kg/hr	250	50

Definitions:

Membrane Geometry – Flat discs or sheets, hollow fibers, tubes, etc.

Pressure Normalized Flux – For materials that display a linear dependence of flux on partial pressure differential, this is equivalent to the membrane's permeance.

GPU – Gas Permeation Unit, which is equivalent to 10^{-6} cm^3 (1 atm, 0°C)/cm^2/s/cm Hg. For non-linear materials, the dimensional units reported should be based on flux measured in cm^3 (1 atm, 0°C)/cm^2/s with pressures measured in cmHg. Note: 1 GPU = 3.3464×10^{-6} kg mol/m^2-s-kPa [SI units].

Type of Measurement – Either mixed or pure gas measurements; target permeance and selectivities should be for mixture of gases found in de-sulfurized flue gas.

Flow Arrangement – Typical gas-separation module designs include spiral-wound sheets, hollow-fiber bundles, shell-and-tube, and plate-and-frame, which result in either co-current, counter-current, cross-flow arrangements, or some complex combination of these.

Packing Density – Ratio of the active surface area of the membrane to the volume of the module.

Shell-Side Fluid – Either the permeate (CO_2-rich) or retentate (flue gas) stream.

Estimated Cost – Basis is kg/hr of CO_2 in CO_2-rich product gas; assuming targets are met.

Other Parameter Descriptions:

Membrane Permeation Mechanism – Permeation through the Polaris™ membrane occurs by the passive solution-diffusion mechanism.

Contaminant Resistance – The membranes are known to be unaffected by water (H_2O), oxygen (O_2), and sulfur dioxide (SO_2). The effect of trace contaminants, such as mercury, arsenic, etc., is unknown and is being examined in the ongoing field demonstration at NCCC.

Flue Gas Pretreatment Requirements – Currently, pretreatment requirements are unknown. The current demonstration tests at NCCC treat post-flue gas desulfurization (FGD) flue gas and will help determine the need for gas treatment prior to entering the membrane system. The greatest concern of species present in flue gas is that particulate matter will foul the membranes, reducing module lifetimes. Particulate filters that can achieve an order of magnitude better ash removal than a standard bag house, and are used today to treat refinery and gasification streams, may be needed.

Membrane Replacement Requirements – Membrane lifetime is being studied in ongoing demonstration tests at NCCC. The target membrane module lifetime is three years, which is at the conservative end of the typical industrial gas separation module lifetime of three to five years.

Waste Streams Generated – The membrane process will recover >95 percent of the H_2O in flue gas as liquid. The quality of this H_2O and its potential to be re-used in the plant will be studied in future work.

technology advantages

- The membranes developed are 10 times more permeable to CO_2 than conventional membranes, which reduce the required membrane area and capital costs.
- A membrane system does not contain any chemical reactions or moving parts, making it simple to operate and maintain.
- The membrane material has a high tolerance of wet acid gases and is inert to O_2.
- The membrane system has a compact footprint and low energy cost.
- The membrane capture system can recover water from flue gas.
- The use of an existing air stream to generate a CO_2 partial-pressure gradient in the countercurrent sweep membrane stage reduces the need for compressors or vacuum pumps, thus reducing the overall energy cost.
- The recycled CO_2 from the air sweep to the boiler increases the CO_2 partial-pressure driving force for separation in the initial cross-flow membrane stage, reducing the required membrane area and total system cost.

R&D challenges

- The membrane process requires a large membrane surface area to achieve separation due to the low partial pressure of CO_2 in flue gas.
- The countercurrent sweep module design could result in several potential inefficiencies, including: sweep-side pressure drop, concentration polarization, poor utilization of the membrane area due to module geometry, and non-countercurrent flow patterns.
- Particulate matter needs to be controlled to reduce its potential impact on the membrane lifetime.
- Feed and permeate side pressure drops may lead to excessive energy losses.
- Cost reductions for the membrane module materials will be needed if the technology is to become economically viable.
- The membrane process depends on large rotating equipment (vacuum pumps, booster fans). The availability of cost-effective equipment that can operate on full-scale flue gas streams has yet to be demonstrated.
- Scale-up and integration issues are a possibility given the large number of membranes needed to service a 550-MWe plant.

results to date/accomplishments

- Scaled-up and produced high permeance membrane formulations on commercial casting and coating equipment. Produced more than 1,000 m^2 of Polaris™ membrane material used to construct 203-mm (8-inch) diameter, commercial-sized, conventional cross-flow and novel countercurrent sweep modules.
- Field tested pilot- and commercial-scale membrane modules with various industrial gas streams (raw coal-fired flue gas, raw natural gas-fired flue gas, and synthesis gas [syngas] containing sulfur species) for up to three months of continuous operation. The modules showed stable performance throughout these tests.
- Field tests revealed the membrane permeance is 10 times higher than existing materials and the membranes possess good stability in acid gases.
- Provided a membrane system to APS to process 4,250 m^3/day (0.15 MMscfd) of natural-gas fired flue gas to provide concentrated CO_2 for testing at an experimental algae farm.
- In mid-2010, MTR conducted a three-month field test of a small slipstream membrane system at the Cholla Unit 3 power plant. The membrane test skid can process 7,000 m^3/day (0.25 MMscfd) of coal-fired flue gas and capture one tonne CO_2/day. The test skid is composed of four, 8-inch diameter Polaris™ membrane modules that demonstrate the cross-flow and sweep configurations. The membrane modules showed stable performance for 45 days during the field testing, consistent with laboratory test results. There was minimal membrane fouling by particulates in the gas stream, which was originally anticipated to be a concern. Most of the system downtime was related to mechanical and electrical problems with the rotating equipment (feed compressor and permeate vacuum pump) caused by the corrosive operating environment. Use of equipment with more appropriate materials of construction in future testing should solve these problems.
- MTR developed new, sweep-side flow channel configurations for the membrane sweep modules. Bench-scale testing indicated the new designs lower the sweep-side pressure drop, while maintaining the sweep performance efficiency.
- MTR estimates the membrane-based CO_2 separation and liquefaction process can capture 90 percent CO_2 using 20 to 25 percent of the plant's energy and cost $30 per tonne of CO_2 captured.
- B&W conducted computational fluid dynamic (CFD) computer modeling to examine the effect of CO_2 recycle to the boiler, which demonstrated that secondary air laden with CO_2 appears feasible as a retrofit.
- MTR's 1-TPD slipstream system was installed at NCCC in November 2011 and continuous operation was initiated in spring 2012 using first-generation Polaris™ modules. Overall, membrane module performance was stable. During the initial 1,000 hours of operation, the membrane enriched CO_2 by about six times in the permeate (approximately 60 percent capture). After 1,000 hours operation, additional modules were loaded to increase the capture rate to 85 percent.

next steps

- Continue to operate the 1-TPD slipstream membrane system at NCCC. Use this system to evaluate new second-generation Polaris™ membrane.
- Conduct field testing on the 1-TPD slipstream membrane system with new flow channel configurations with a goal of minimizing pressure drop through the membrane system.
- Complete construction and operate the 20-TPD small pilot-scale (approximately 1 MWe equivalent gas flow) membrane system for a six-month field test at NCCC beginning in spring 2014.
- Analyze the performance of the membrane system, determine how it would be best integrated with a coal-fired power plant, and prepare a comparative economic analysis of the membrane-based CO_2 capture process versus other capture technologies.
- Lower the membrane module cost by incorporating low-cost components with a target of $50/$m^2$.
- Integrate a CO_2 liquefaction section into the overall CO_2 capture system.
- Test options for recycling the air sweep from the countercurrent sweep module to the boiler.

available reports/technical papers/presentations

Amo, K., et.al, "Slipstream Testing of a Membrane CO_2 Capture Process," presented at the 2012 NETL CO_2 Capture Technology Meeting, Pittsburgh, Pennsylvania, July 2012. *http://www.netl.doe.gov/publications/proceedings/12/co2capture/presentations/1-Monday/T%20Merkel-MTR-Membrane%20Process.pdf*.

Merkel, T., et.al, "Pilot Test of an Efficient Membrane Process for Post-Combustion CO_2 Capture Process," presented at the 2011 NETL CO_2 Capture Technology Meeting, Pittsburgh, Pennsylvania, August 2011. *http://www.netl.doe.gov/publications/proceedings/11/co2capture/presentations/1-Monday/22Aug11-Merkel-MTR-Efficient%20Membrane%20Pilot%20Test.pdf*.

Amo, K. et.al, "Membrane Process to Capture CO_2 from Coal-Fired Power Plant Flue Gas," presented at the 2010 NETL CO_2 Capture Technology Meeting, Pittsburgh, Pennsylvania, September 2010. *http://www.netl.doe.gov/publications/proceedings/10/co2capture/presentations/tuesday/Xiaotong%20Wei%20-%20NT0005312%20and%20NT43085.pdf*.

Merkel, T., et.al, "Power plant post-combustion carbon dioxide capture: An opportunity for membranes," Journal of Membrane Science, Volume 359, Issues 1-2, 1 September 2010, pages 126-139.

Merkel, T., et.al, "Opportunities for Membranes in Power Generation Processes," Gordon Research Conference Presentation, July 27, 2010.

Merkel, T., et.al, "A Membrane Process to Capture CO_2 from Coal-Fired Power Plant Flue Gas," presented at the Annual NETL CO_2 Capture Technology for Existing Plants R&D Meeting, Pittsburgh, Pennsylvania, March 2009. *http://www.netl.doe.gov/publications/proceedings/09/CO2/pdfs/5312%20MTR%20membrane%20%28Merkel%29%20mar09.pdf*.

"The Membrane Solution to Global Warming," 6th Annual Conference on Carbon Capture and Sequestration, Pittsburgh, Pennsylvania, May 2007.

BENCH-SCALE, HIGH-PERFORMANCE, THIN FILM COMPOSITE HOLLOW FIBER MEMBRANE FOR POST-COMBUSTION CARBON DIOXIDE CAPTURE

technology maturity:

Bench-Scale, Simluated Flue Gas

project focus:

Composite Hollow Fiber Membranes

participant:

General Electric Global Research Center

project number:

FE0007514

NETL project manager:

Isaac Aurelio
isaac.aurelio@netl.doe.gov

principal investigator:

Dhaval Bhandari
General Electric
bhandari@ge.com

partners:

Idaho National Laboratory
Western Research Institute
Georgia Institute of Technology

performance period:

10/1/11 – 9/30/14

primary project goals

General Electric Global Research (GE) is developing high-performance, thin film polymer composite hollow fiber membranes and advanced processes for economical post-combustion carbon dioxide (CO_2) capture. The project includes bench-scale testing to tune the properties of a novel phosphazene polymer membrane and decrease costs through development of innovative fabrication techniques.

technical goals

- Optimize phosphazene polymer and coating solution: Synthesize phosphazene polymer, optimize separation performance, and develop processable coating solutions.
- Fabricate hollow fiber support layer: Produce highly porous, robust hollow fiber supports with controlled surface porosity from commercially available materials.
- Fabricate composite coated hollow fiber membranes: Develop processes to apply thin layer coatings on hollow fiber supports and elucidate fundamental polymer properties.
- Test membranes at bench-scale under flue gas conditions: Exposure and performance test materials and membranes under flue-gas conditions.
- Conduct process evaluation and module design: Conduct technical and economical process evaluation and module design and fabrication.

technical content

GE and partners are developing a high-performance, thin film polymer composite hollow fiber membrane and advanced process for economical post-combustion CO_2 capture. The project utilizes novel phosphazene polymeric materials to produce an economical and scalable composite hollow fiber membrane module. The membrane will be optimized at bench-scale, including tuning the properties of the phosphazene polymer in a coating solution and fabricating highly engineered porous hollow fiber supports. The project will also define the processes for coating the fiber support to manufacture thin, defect-free composite hollow fiber membranes.

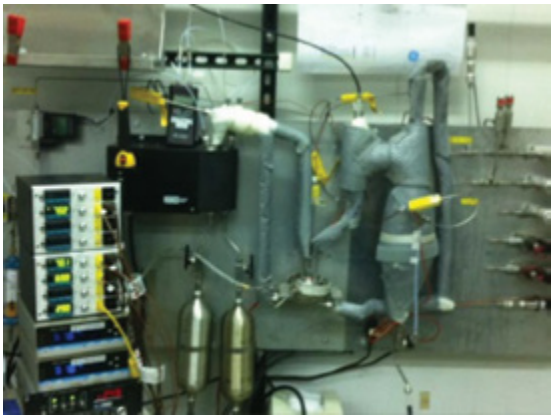

Figure 1: GE Test Rig – Flat Sheet and Hollow Fiber Membranes

The physical, chemical, and mechanical stability of the materials (individual and composite) to flue gas components will be evaluated using exposure and performance tests. Membrane fouling and cleanability studies will define long-term performance.

GE and the Georgia Institute of Technology (Georgia Tech) will work together on developing processes to apply the thin layer coating formulations onto the hollow fiber supports. GE will leverage the knowledge gained from using its flat sheet film coating apparatus to enable development of the continuous dip process for coating of hollow fiber membrane supports. Georgia Tech will use the in situ process developed to coat porous cellulose acetate hollow fibers with defect-free layers as a benchmark, which will be further adapted to obtain thin, defect-free coated layers. Both the continuous dip coating and batch in situ processes will be optimized to provide economical and scalable coated composite hollow fiber membranes.

Working with Idaho National Laboratory, Georgia Tech will characterize phosphazene material properties in films cast on porous polymer supports to elucidate polymer properties including aging, membrane fouling, and cleanability. The characterization techniques will enable a better understanding of polymer and composite membrane performance. Membrane performance validation testing under flue-gas conditions will be performed at Western Research Institute's coal combustion test facility. Module design and technical and economic feasibility analyses will be conducted to evaluate the overall performance and impact of the process on the cost of electricity.

Figure 2: Georgia Tech Hollow Fiber Fabrication Line

TABLE 1: PROCESS PARAMETERS

	Units	Current R&D Value	Target R&D Value
Materials Properties			
Materials of Fabrication for Selective Layer		Phosphazene	
Materials of Fabrication for Support Layer		Polymer	
Nominal Thickness of Selective Layer	µm	1 – 10	<1
Membrane Geometry		Flat sheet/Hollow fiber	Hollow fiber
Maximum Trans-Membrane Pressure	bar	2 – 5	Up to 10
Hours Tested Without Significant Degradation		200 (flat sheet) 100 (hollow fiber)	100 – 1,000
Manufacturing Cost for Membrane Material	$/m^2	-	-
Membrane Performance			
Temperature	°C	30 and 65	30 and 60
CO_2 Pressure Normalized Flux	GPU or equivalent	50-275 Barrer (flat sheet 30 °C) 100-425 Barrer (flat sheet 65 °C) Up to 70 GPU (Hollow fibers 35 °C)	1,000 – 2,500 GPU (Hollow fibers)
CO_2/H_2O Selectivity	-	8-10	8 – 10
CO_2/N_2 Selectivity	-	15 – 20 (65 °C) flat sheet 30 – 40 (30 °C) flat sheet 10 – 35 (35 °C) hollow fibers	30 – 40
CO_2/SO_2 Selectivity	-	Not tested	Non tested
Type of Measurement	-	mixed gas	mixed gas
Proposed Module Design			
Flow Arrangement	-	Counter current	

TABLE 1: PROCESS PARAMETERS

	Units	Current R&D Value	Target R&D Value
Packing Density	m^2/m^3	>1,000	
Shell-Side Fluid	-	Retentate	
Flue Gas Flowrate	kg/hr	<1	
CO_2 Recovery, Purity, and Pressure	% / % / bar	>90%, 60–80%, 0.2–1 bar	
Pressure Drops Shell/Tube Side	bar	1-4	
Estimated Module Cost of Manufacturing and Installation	—	<$100/$m^2$	

Definitions:

Membrane Geometry – Flat discs or sheets, hollow fibers, tubes, etc.

Pressure Normalized Flux – For materials that display a linear dependence of flux on partial pressure differential, this is equivalent to the membrane's permeance.

GPU – Gas Permeation Unit, which is equivalent to 10^{-6} cm^3 (1 atm, 0°C)/cm^2/s/cm Hg. For non-linear materials, the dimensional units reported should be based on flux measured in cm^3 (1 atm, 0°C)/cm^2/s with pressures measured in cmHg. Note: 1 GPU = 3.3464×10^{-6} kg mol/m^2-s-kPa [SI units].

Type of Measurement – Either mixed or pure gas measurements; target permeance and selectivities should be for mixture of gases found in de-sulfurized flue gas.

Flow Arrangement – Typical gas-separation module designs include spiral-wound sheets, hollow-fiber bundles, shell-and-tube, and plate-and-frame, which result in either co-current, counter-current, cross-flow arrangements, or some complex combination of these.

Packing Density – Ratio of the active surface area of the membrane to the volume of the module.

Shell-Side Fluid – Either the permeate (CO_2-rich) or retentate (flue gas) stream.

Estimated Cost – Basis is kg/hr of CO_2 in CO_2-rich product gas; assuming targets are met.

Other Parameter Descriptions:

Membrane Permeation Mechanism – Solution-diffusion mechanism.

Contaminant Resistance – Phosphazene-based membranes have been tested to be resistant to contaminant species such as oxygen (O_2), nitrogen oxide (NO_x), sulfur dioxide (SO_2), and moisture present in coal flue gas.

Flue Gas Pretreatment Requirements – Fly ash particulate removal.

Membrane Replacement Requirements – Membranes found to be stable with up to 200 hours of testing. Long-term stability tests are currently in progress.

Waste Streams Generated – Acidic water condensate stream.

technology advantages

- Surface property optimization to reduce fly ash adhesion.
- Highly scalable, low-cost hollow fiber support platform.
- Ease of cleaning should provide longer membrane life.
- Phosphazene polymer with high permeability and selectivity.

R&D challenges

- Fouling potential from fly ash/particulates.
- Permeability and selectivity at 60°C lower than anticipated.
- Large membrane area requirements and process integration.

results to date/accomplishments

- Synthesized phosphazene polymer, characterized separations performance under realistic flue gas conditions, and developed hollow fiber support coating solutions.
- Developed engineered, high-porosity, hollow fiber supports.
- Built/upgraded bench-scale membrane coating and testing facilities.
- Completed initial process technical and economic feasibility study.
- Fabricated phosphazene coated defect-free hollow fiber membranes.

next steps

- Optimize phosphazene polymer coatability on hollow fiber supports.
- Optimize the continuous dip and batch coating processes to provide economical and scalable coated composite hollow fiber membranes.
- Conduct preliminary membrane fouling and aging studies.
- Test coated composite hollow fiber membranes at bench-scale under flue gas conditions.
- Conduct final technical and economic feasibility analyses and an environmental, health, and safety assessment.

available reports/technical papers/presentations

Bhandari, D., et al., "Composite Hollow Fiber Membranes for Post Combustion CO_2 Capture," presented at the 2012 NETL CO_2 Capture Technology Meeting, Pittsburgh, Pennsylvania, July 2012. *http://www.netl.doe.gov/File%20Library/events/2012/co2%20capture%20meeting/D-Bhandari-GEGR-Hollow-Fiber-Membranes.pdf*.

LOW-PRESSURE MEMBRANE CONTACTORS FOR CO_2 CAPTURE

primary project goals

Membrane Technology & Research (MTR) is developing a new type of membrane contactor (or mega-module) to decrease capture costs, energy use, and system footprint through bench-scale testing of a module with a membrane area that is 500 m^2, 20 to 25 times larger than that of current modules used for carbon dioxide (CO_2) capture.

technical goals

- Develop a module design to reduce energy cost by lowering module pressure drop.
- Develop a module design with a large membrane area.
- Develop a module design to reduce manifold complexity, footprint, and cost.

technical content

MTR is developing a new type of membrane contactor (or mega-module) to separate CO_2 from power plant flue gas. This module's membrane area is 500 m^2, which is 20 to 25 times larger than that of current modules used for CO_2 capture. The countercurrent sweep module is crucial to the MTR-developed CO_2 removal from flue gas process, as this membrane module permits the use of air as a sweep gas, which increases the CO_2 flux through the membrane without requiring additional compression energy. This means the CO_2 concentration in the flue gas is increased at a minimal energy cost.

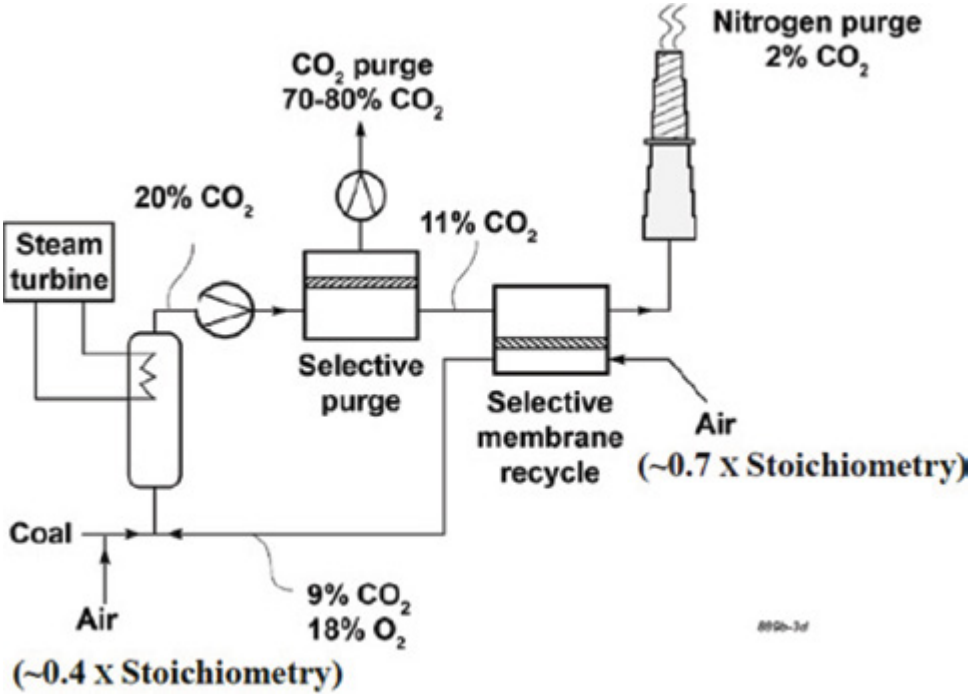

Figure 1: Two-Stage Membrane CO_2 Capture Process

technology maturity:

Bench-Scale, Simulated and Actual Flue Gas

project focus:

Low-Pressure Membrane Contactors (Mega-Module)

participant:

Membrane Technology & Research, Inc.

project number:

FE0007553

NETL project manager:

Morgan Mosser
morgan.mosser@netl.doe.gov

principal investigator:

Richard Baker
Membrane Technology & Research, Inc.
richard.baker@mtrinc.com

partners:

University of Toledo

performance period:

10/1/11 – 9/30/14

TABLE 1: PROCESS PARAMETERS

	Units	Current R&D Value	Target R&D Value
Materials Properties			
Materials of Fabrication for Selective Layer		Proprietary polymer	
Materials of Fabrication for Support Layer		Proprietary polymer	
Nominal Thickness of Selective Layer	µm	<1	<1
Membrane Geometry		Plate-and-Frame	Plate-and-Frame
Maximum Trans-Membrane Pressure	bar	70	70
Hours Tested Without Significant Degradation		500	500
Manufacturing Cost for Membrane Material	$/m^2	100	20
Membrane Performance			
Temperature	°C	30	30
CO_2 Pressure Normalized Flux	GPU or equivalent	1,500	>2,500
CO_2/H_2O Selectivity	-	0.5	0.5
CO_2/N_2 Selectivity	-	50	50
CO_2/SO_2 Selectivity	-	0.5	0.5
Type of Measurement	-	Pure gas	Pure gas
Proposed Module Design			
Flow Arrangement	-	Countercurrent	
Packing Density	m^2/m^3	1,000	
Shell-Side Fluid	-	N/A	
Flue Gas Flowrate	kg/hr	5000	
CO_2 Recovery, Purity, and Pressure	% / % / bar	90%, >96%, 140 bar	
Pressure Drops Shell/Tube Side	bar	Feed: 0.1; Sweep:0.2	
Estimated Module Cost of Manufacturing and Installation	$ / kg/hr	250	50

Definitions:

Membrane Geometry – Flat discs or sheets, hollow fibers, tubes, etc.

Pressure Normalized Flux – For materials that display a linear dependence of flux on partial pressure differential, this is equivalent to the membrane's permeance.

GPU – Gas Permeation Unit, which is equivalent to 10^{-6} cm^3 (1 atm, 0°C)/cm^2/s/cm Hg. For non-linear materials, the dimensional units reported should be based on flux measured in cm^3 (1 atm, 0°C)/cm^2/s with pressures measured in cmHg. Note: 1 GPU = 3.3464×10^{-6} kg mol/m^2-s-kPa [SI units].

Type of Measurement – Either mixed or pure gas measurements; target permeance and selectivities should be for mixture of gases found in de-sulfurized flue gas.

Flow Arrangement – Typical gas-separation module designs include spiral-wound sheets, hollow-fiber bundles, shell-and-tube, and plate-and-frame, which result in either co-current, counter-current, cross-flow arrangements, or some complex combination of these.

Packing Density – Ratio of the active surface area of the membrane to the volume of the module.

Shell-Side Fluid – Either the permeate (CO_2-rich) or retentate (flue gas) stream.

Other Parameter Descriptions:

Contaminant Resistance – The membranes are known to be unaffected by water (H_2O), oxygen (O_2), and sulfur dioxide (SO_2). The effect of trace contaminants, such as mercury, arsenic, etc., is unknown and is being examined in the ongoing field demonstration at the National Carbon Capture Center (NCCC) in Wilsonville, Alabama, under a different U.S. Department of Energy National Energy Technology Laboratory (DOE/NETL)-sponsored project (DE-FE0005795).

Flue Gas Pretreatment Requirements – Currently, pretreatment requirements are unknown. The current demonstration tests at NCCC treat post-flue gas desulfurization (FGD) flue gas and will help determine the need for gas treatment prior to entering the membrane system. The greatest concern of species present in flue gas is that particulate matter will foul the membranes, reducing module lifetimes. Particulate filters that can achieve an order of magnitude better ash removal than a standard bag house, and are used today to treat refinery and gasification streams, may be needed.

Waste Streams Generated – The membrane process will recover >95 percent of the H_2O in flue gas as liquid. The quality of this H_2O and its potential to be reused in the plant will be studied in future work.

technology advantages

- In flue gas applications, the novel countercurrent sweep module recycles CO_2 to the boiler with an air sweep, which increases the CO_2 concentration in the flue gas with minimal energy input.
- The recycle of CO_2 to the boiler increases the concentration of CO_2 in the flue gas, which could make the CO_2 capture process easier for technologies other than membranes.
- The novel countercurrent sweep module design has low-pressured drop, which reduces the energy costs.
- Mega-modules (500 m^2 or larger) reduce the manifolding complexity, footprint, and cost of the membrane system.

R&D challenges

- The novel sweep plate and framed design will need to overcome several issues, including: sweep-side pressure drop, poor utilization of the membrane area due to module geometry, and non-countercurrent flow patterns.
- Spacer design and selection needs to maximize packing density and mechanical support while minimizing pressure drop.
- Scale-up issues associated with building membrane modules 10 to 20 times larger than conventional modules.

results to date/accomplishments

- Completed design and fabrication of various 20-m^2 prototype membrane modules.
- Completed pressure drop and CO_2 separation performance testing of various 20-m^2 prototype membrane modules with bench-scale lab test system
- Completed design and construction of larger lab test system, sized for parametric studies of 100-m^2 membrane modules.
- Conducted CFD simulations of various sweep module designs that incorporate pressure drop, velocity profiles, and mass transfer.

next steps

- Conduct parametric testing of 100-m^2 membrane modules on large lab test unit at MTR.
- Scale up to full-scale module (> 500-m^2) for testing at NCCC on MTR's 20-TPD small pilot-scale test system.
- Refinement of CFD and process simulation calculations to rationalize module performance.
- Evaluation of hybrid process designs for CO_2 capture from flue gas.

available reports/technical papers/presentations

Baker, R., et.al, "Low-Pressure Membrane Contactors for CO_2 Capture," presented at the 2012 NETL CO_2 Capture Technology Meeting, Pittsburgh, Pennsylvania, July 2012. *http://www.netl.doe.gov/publications/proceedings/12/co2capture/presentations/1-Monday/R%20Baker-MTR-LP%20Membrane%20Contactors.pdf*.

HYBRID MEMBRANE/ABSORPTION PROCESS FOR POST-COMBUSTION CO_2 CAPTURE

primary project goals

Gas Technology Institute (GTI) is developing a hybrid membrane/absorption process (known as Carbo-Lock™) for post-combustion carbon dioxide (CO_2) capture. The Carbo-Lock™ process combines solvent absorption and a hollow-fiber membrane to leverage capture cost and performance advantages of two different capture technologies through bench-scale testing on synthetic and actual flue gas to evaluate mass transfer and regeneration. The bench-scale testing using actual flue gas is to be conducted on a 25 kWe-equivalent slipstream at Midwest Generation's Joliet Power Station.

technical goals

- Develop hollow-fiber membranes suitable for the membrane absorption application with improved mass transfer. Porous and composite membrane configurations are being evaluated.
- Demonstrate feasibility of the membrane contactor technology for flue gas CO_2 separation.
- Determine optimum solvent for use in process.
- Develop an energy-efficient regeneration process that enables CO_2 separation at elevated pressures.
- Conduct bench-scale testing of the process using actual flue gas.
- Conduct process design and preliminary economic analysis.

technical content

GTI is partnering with PoroGen Corporation and Aker Process Systems in a three-year effort to develop a hybrid technology for CO_2 capture based on a combination of solvent absorption and hollow fiber membrane technologies. The membrane contactor is a novel gas separation technology based on a gas/liquid membrane concept. It operates with a solvent on one side of the membrane and gas on the other. The membrane contactor process combines the advantageous features of membrane and absorption technologies and enables economical utilization of advanced absorption solvents. The PoroGen hollow-fiber membrane is based on a chemically and thermally resistant commercial engineered polymer (poly ether ether ketone [PEEK]). The hybrid technology increases gas/liquid contact area by a factor of 10 over conventional packed or tray absorption columns, thus increasing mass transfer. The membrane CO_2/nitrogen (N_2) selectivity is controlled by the chemical affinity of CO_2 with the selected solvent. The process could lower steam regeneration energy requirement as compared to conventional amine-based solvent processes by reducing the amount of water loss, and the CO_2 could be generated at pressure, reducing compression costs.

Figure 1 shows the basic mass transfer principle using the porous, hollow-fiber PEEK membrane contactor. The membrane matrix is filled with gas and mass transfer occurs via a diffusion reaction mechanism. The driving force is the difference in chemical potential of the

technology maturity:

Bench-Scale, Using Actual Flue Gas

project focus:

Hybrid Membrane/Absorption Process

participant:

Gas Technology Institute

project number:

FE0004787

NETL project manager:

José Figueroa
jose.figueroa@netl.doe.gov

principal investigator:

Shaojun Zhou
Gas Technology Institute
shaojun.zhou@gastechnology.org

partners:

Aker Process Systems
Midwest Generation EME, LLC
PoroGen Corporation

performance period:

10/1/10 – 12/31/13

CO_2 in the gas side versus the liquid side of the membrane. The mass transfer is not pressure-driven and, therefore, the absolute pressure difference between the membrane shell and tube side is either low or close to zero.

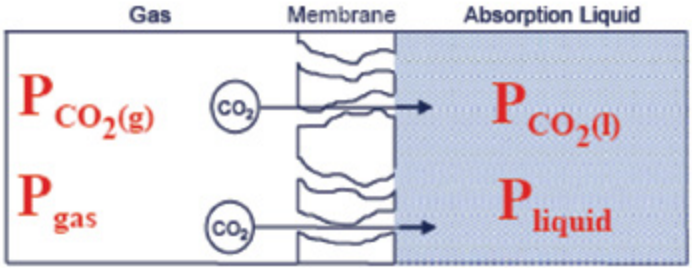

Figure 1: Mass Transfer Principle for Hybrid Membrane/Solvent Contactor

An advanced hindered amine and promoted carbonate solvents are being tested in combination with the membrane contactor system. The use of these solvents will decrease regeneration energy requirements as well as absorbent degradation. For the hindered amine solvent, the regeneration will be carried out in a membrane contactor at high temperature to generate CO_2 at elevated pressure. For the carbonate solvent, the regeneration will be carried out in a membrane contactor with low-pressure steam sweep to decrease regeneration energy. Both solvent systems are being evaluated initially and the most optimal system will be selected for the bench-scale field tests. Figure 2 shows a schematic diagram for the hybrid membrane/solvent process showing the absorber (membrane contactor) and regeneration columns.

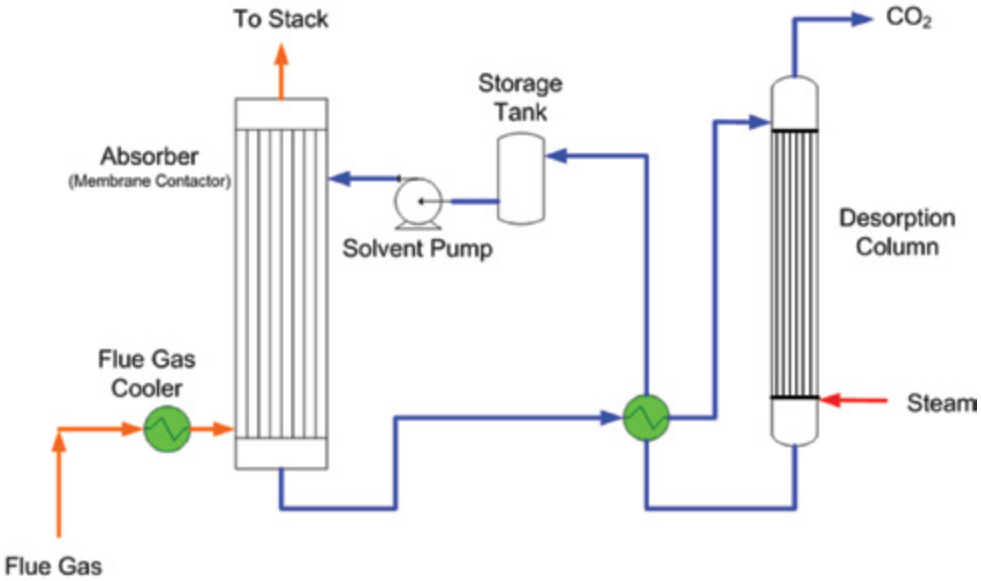

Figure 2: Process Schematic for Hybrid Membrane/Solvent Technology

The main process features of the hybrid membrane/solvent technology include: a higher CO_2 loading differential between rich and lean solvent is possible; increased mass transfer reduces system size; high specific surface area available for mass transfer; independent gas and liquid flow; linear scale up; and concentrated solvents or specialty absorbents can be used. Table 1 provides a summary of the membrane process parameters.

TABLE 1: MEMBRANE PROCESS PARAMETERS

	Units	Current R&D Value	Target R&D Value
Materials Properties			
Materials of Fabrication for Selective Layer	-	Perfluoro-oligomer	
Materials of Fabrication for Support Layer	-	PEEK	
Nominal Thickness of Selective Layer	µm		
Membrane Geometry	-	Hollow Fiber	Hollow Fiber
Max Trans-Membrane Pressure	bar		
Hours Tested Without Significant Degradation	-	100 hours	140 hours
Manufacturing Cost for Membrane Material	$/m^2		
Membrane Performance			
Temperature	°C	20 – 50	20 – 120
CO_2 Pressure Normalized Flux	GPU or equivalent	1,000 – 5,000	1,000 – 2,000
CO_2/H_2O Selectivity	-		
CO_2/N_2 Selectivity	-	Determined by solvent used	Determined by solvent used
CO_2/SO_2 Selectivity	-		
Type of Measurement	-	Mixed	Mixed
Proposed Module Design			
Flow Arrangement	-	Countercurrent	
Packing Density	m^2/m^3	500 – 2,500	
Shell-Side Fluid	-	Chemical Solvent+CO_2	
Flue Gas Flowrate	kg/hr		
CO_2 Recovery, Purity, and Pressure	% / % / bar	95%, 99%, 97%	
Pressure Drops Shell/Tube Side	bar	1/0.1	
Estimated Absorber/Stripper Cost of Manufacturing and Installation	$\frac{\$}{kg/hr}$		

Definitions:

Membrane Geometry – Flat discs or sheets, hollow fibers, tubes, etc.

Pressure Normalized Flux – For materials that display a linear dependence of flux on partial pressure differential, this is equivalent to the membrane's permeance.

GPU – Gas Permeation Unit, which is equivalent to 10^{-6} cm^3 (1 atm, 0°C)/cm^2/s/cm Hg. For non-linear materials, the dimensional units reported should be based on flux measured in cm^3 (1 atm, 0°C)/cm^2/s with pressures measured in cmHg. Note: 1 GPU = 3.3464×10^{-6} kg mol/m^2-s-kPa [SI units].

Type of Measurement – Either mixed or pure gas measurements; target permeance and selectivities should be for mixture of gases found in de-sulfurized flue gas.

Flow Arrangement – Typical gas-separation module designs include spiral-wound sheets, hollow-fiber bundles, shell-and-tube, and plate-and-frame, which result in either co-current, counter-current, cross-flow arrangements, or some complex combination of these.

Packing Density – Ratio of the active surface area of the membrane to the volume of the module.

Shell-Side Fluid – Either the permeate (CO_2-rich) or retentate (flue gas) stream.

Estimated Cost – Basis is kg/hr of CO_2 in CO_2-rich product gas; assuming targets are met.

Other Parameter Descriptions:

Membrane Permeation Mechanism – The hybrid membrane/absorption process is driven by the chemical potential difference of CO_2 between the gas phase and the solvent phase and high purity of CO_2 product can be generated in a single stage. The process selectivity for the hybrid membrane/absorption process approaches thousands and is determined by the chemical affinity of the absorption solvent to CO_2. As compared with the conventional membrane process, the permeate side partial pressure of CO_2 can be considered to be close to zero due to the chemical interaction of CO_2 with the absorption solvent. Therefore, the pressure ratio in the hybrid membrane/absorption process approaches infinity. Note that membrane selectivity is not required in a hybrid membrane/absorption process, although the porous super-hydrophobic membranes used in this project showed some selectivity for CO_2 over N_2.

Contaminant Resistance – Membrane is resistant to all contaminants. Absorbents will be affected by contaminants to a lesser extent than a conventional packed or tray column. Membrane will provide a measure of protection for the solvents from degradation by contaminants (a barrier).

Flue Gas Pretreatment Requirements – Particle removal.

Membrane Replacement Requirements – To be determined.

Waste Streams Generated – None.

technology advantages

- The membrane contactor process combines the advantageous features of membrane and absorption technologies and enables economical utilization of advanced absorption solvents.
- The hybrid technology increases interfacial gas/liquid area by a factor of 10 over conventional packed or tray absorption columns, thus increasing mass transfer.
- The process requires lower steam regeneration energy compared to conventional amine-based solvent processes.
- The CO_2 is generated at pressure, reducing compression costs.
- Up to 70 percent reduction in system size and footprint compared to a conventional solvent-based process.

R&D challenges

- Membrane hydrophobic properties may change with contact time in solvent causing solvent leakage. Long-term testing required.
- Mass transfer coefficient not sufficiently high for gas absorption and solvent regeneration in the membrane contactor.
- Develop solvent regeneration process in membrane module.
- Reduce process capital and operating costs.

results to date/accomplishments

- Develop hollow-fiber membranes suitable for the membrane absorption application:
  - Optimization of the super-hydrophobic PEEK membranes morphology for the preferred methyl-diethanolamine (MDEA) solvent system is close to completion. A membrane with "non-wetting" characteristics towards the MDEA solvent system was developed. The membrane morphology will be further optimized based on CO_2 separation and capture test results.
  - Membrane CO_2 permeance of approximately 2,000 GPU has been achieved.
  - Design of commercial-size module completed and design validated through computational fluid dynamic (CFD) modeling. Scaled-up module from 1 m^2 (lab-scale) to 100 m^2 (8-inch diameter x 60-inch long, commercial-scale).
  - Established production capability of eight-inch diameter module on commercial-scale equipment.

- Demonstrate feasibility of the membrane contactor technology:
  - Conducted laboratory-scale testing (2-inch diameter x 15-inch long, 1 m^2) for membrane absorber using synthetic flue gas and achieved technical goal: ≥ 90 percent CO_2 removal in one stage; gas side pressure drop: 1.6 pounds per square inch (psi); mass transfer coefficient: 1.7 1/s.
  - Conducted laboratory-scale testing (2-inch diameter x 15-inch long, 1 m^2) for membrane desorber using synthetic flue gas and achieved technical goal: CO_2 purity (97%) and CO_2 stripping rate (4.1 kg/m^2/h) achieved. Operation optimization is ongoing to ensure "lean" solvent is lean enough for membrane absorber.
- Determine optimum solvent for use in process:
  - Commercial aMDEA (40 wt%), activated K_2CO_3 (20 wt%), and Hitachi's H_3-1 solvent have been evaluated.
- Develop an energy efficient regeneration process:
  - Conducting regeneration tests with and without steam sweep.
- Conduct bench-scale testing using actual flue gas:
  - Completed construction of 25-kW (0.5 ton CO_2 per day) bench-scale membrane skid.
- Conduct process design and preliminary economic analysis:
  - Preliminary economic evaluation based on membrane absorber only results in a 56 percent increase in COE.
  - Preliminary evaluation based on membrane absorber and desorber testing results in a 54 percent increase in COE.

next steps

- Continue membrane development based on regeneration testing results.
- Continue evaluation of regeneration mode and down select optimal mode for slip-stream, bench-scale testing.
- After regeneration mode is down selected, use reflux in membrane desorber to improve regeneration efficiency (target: "lean" solvent lean enough for membrane absorber).
- Refine the process economics based on the laboratory test data.
- Finalize testing plan for slip-stream, bench-scale testing.
- Conduct slip-stream field test of the bench-scale skid at Midwest Generation power plant beginning summer 2013.

Final test results will not be available until after the September 2013 project completion date.

available reports/technical papers/presentations

Zhou, J., et al., "Hybrid Membrane/Absorption Process for Post-Combustion CO_2 Capture (Membrane Contactor)," presented at the 2012 NETL CO_2 Capture Technology Meeting, Pittsburgh, Pennsylvania, July 2012. *http://www.netl.doe.gov/File%20Library/events/2012/co2%20capture%20meeting/J-Zhou-GTI-Hybrid-Membrane-Process.pdf*.

Li, S., et al., "Hybrid Membrane/Absorption Process for Post-Combustion CO_2 Capture (Membrane Contactor)," presented at the 2011 NETL CO_2 Capture Technology Meeting, Pittsburgh, Pennsylvania, August 2011. *http://www.netl.doe.gov/File%20Library/Research/Coal/ewr/co2/22Aug11-Li-GTI-Hybrid-Membrane-Absorption-Process.pdf*.

Zhou, J., et al., "Hybrid Membrane/Absorption Process for Post-Combustion CO_2 Capture (Membrane Contactor)," presented at the 2010 NETL CO_2 Capture Technology Meeting, Pittsburgh, Pennsylvania, September 2010. *http://www.netl.doe.gov/File%20Library/Research/Coal/ewr/co2/Shaojun-Zhou---Gas-Technology-Institute.pdf*.

CO_2 CAPTURE BY SUB-AMBIENT MEMBRANE OPERATION

primary project goals

American Air Liquide, Inc. (AL) set out to develop a post-combustion carbon dioxide (CO_2) capture process based on sub-ambient temperature operation (< -10°C) of a hollow-fiber membrane. The project included bench-scale testing to demonstrate the membrane's high selectivity/permeance, mechanical integrity, and long-term operability at low temperatures.

technical goals

- Demonstrate membrane performance (high selectivity and permeance) operating at sub-ambient temperature with a commercial-scale membrane module in a bench-scale test skid. The bench-scale test work was to be mainly conducted at AL's Delaware Research & Technology Center.
- Verify mechanical integrity of commercial-scale membrane module structural components at sub-ambient temperatures.
- Demonstrate the long-term operability of the sub-ambient temperature membrane skid.
- Evaluate the effect of possible contaminants (e.g., sulfur dioxide [SO_2], nitrogen oxides [NO_x]) on membrane performance through laboratory testing.
- Refine process simulation for integrated process with flue gas conditioning and CO_2 liquefier.
- Design process flow diagram of slip-stream-scale unit for possible field test.

technical content

AL set out to develop a CO_2 capture process based on sub-ambient temperature operation of a hollow-fiber membrane. For most membrane materials, permeability decreases and selectivity increases with a decrease in operating temperature. However, laboratory measurements of the AL membranes operated at temperatures below -20°C show two to four times higher CO_2/nitrogen (N_2) selectivity with minimal loss of CO_2 permeance compared to ambient temperature values.

Figure 1 presents a simplified block diagram of the cold membrane process. A highly selective cold membrane provides pre-concentration of CO_2 prior to CO_2 partial condensation in a liquefaction unit. The cryogenic heat exchanger system provides energy integration between the membrane and CO_2 liquefaction system.

technology maturity:
Laboratory/Bench-Scale

project focus:
Low-Temperature Membrane

participant:
American Air Liquide

project number:
FE0004278

NETL project manager:
Andrew O'Palko
andrew.opalko@netl.doe.gov

principal investigator:
Sudhir Kulkarni
American Air Liquide Inc.
sudhir.kulkarni@airliquide.com

partners:
Air Liquide Advanced Technologies US – MEDAL
Air Liquide Engineering S.A.

performance period:
10/1/10 – 11/30/12

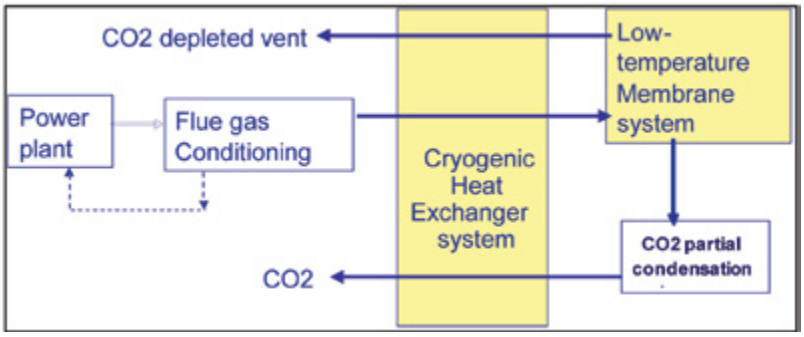

Figure 1: Block Diagram of Cold Membrane Process

Figure 2 shows a schematic diagram of the membrane-based CO_2 compression and purification unit (CPU) process. The process lines in Figure 2 are color-coded (black for ambient temperature; dark blue for approximately -30°C; and light blue for approximately -50°C). The pre-treated flue gas is compressed to approximately 230 pounds per square inch (psi) (16 bar). The heat of compression is captured in boiler feed water, raising its temperature to approximately 147°C. The compressed flue gas is then dried in a dehydration unit to prevent water condensation when the stream is cooled in the economizing heat exchanger to approximately -40°C. The cooled, dried, compressed flue gas is then fed to the membrane to produce a residue stream with approximately 1.6 percent CO_2 at approximately 215 psi (15 bar) and a permeate stream with approximately 60 to 70 percent CO_2 at approximately 17 psi (1 to 2 bar). After the residue is sent through one pass of the heat exchanger, further cooling and energy recovery is done via a series of turbo-expanders with the resulting cold residue stream at -57°C sent through the heat exchanger. Finally, the excess pressure energy remaining in the warmed residue is partly recovered in a warm turbo-expander before venting. A fraction of the vent gas is used to regenerate the drier. The permeate stream is re-compressed, cooled in the heat exchanger, and undergoes phase separation in the cryo-phase separator. Liquid CO_2 is pumped from the separator to provide a sequestration-ready product CO_2 at approximately 870 psi (60 bar), or greater, and 20°C. The overhead from the cryo-phase separator is warmed through the heat exchanger and then undergoes energy recovery in a turbo-expander. This stream is mixed with the incoming dried flue gas, which raises the mixed feed concentration entering the membrane to 18 percent CO_2. The higher CO_2 content improves the membrane separation.

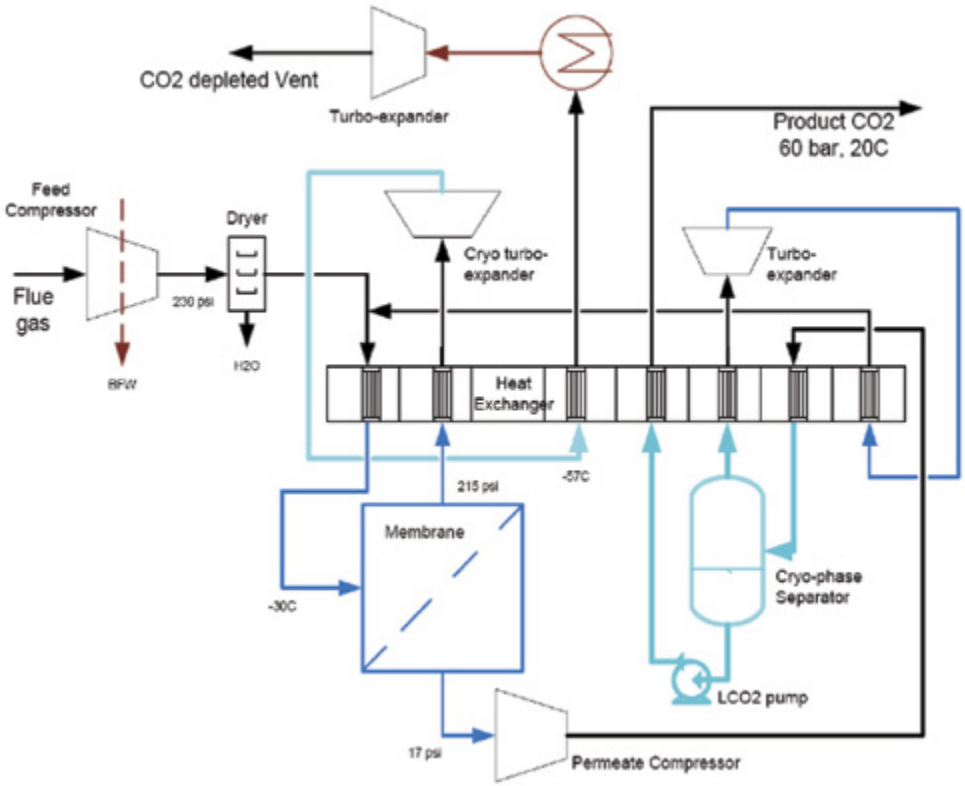

Figure 2: Schematic Diagram of Cold Membrane Process

TABLE 1: MEMBRANE PROCESS PARAMETERS

	Units	Current R&D Value	Target R&D Value
Materials Properties			
Materials of Fabrication for Selective Layer	-		
Materials of Fabrication for Support Layer	-	(if applicable)	
Nominal Thickness of Selective Layer	µm		
Membrane Geometry	-	Hollow fiber	
Max Trans-Membrane Pressure	bar	24	
Hours Tested Without Significant Degradation	-	8,000	
Manufacturing Cost for Membrane Material	$/m^2		
Membrane Performance			
Temperature	°C	-30 to -45	
CO_2 Pressure Normalized Flux	GPU or equivalent	>90	> 90
CO_2/H_2O Selectivity	-		
CO_2/N_2 Selectivity	-	80 at proposed conditions	90
CO_2/SO_2 Selectivity	-		
Type of Measurement	-	Mixed gas	
Proposed Module Design			
Flow Arrangement	-	Counter-current hollow fiber	
Packing Density	m^2/m^3	>1,000	
Shell-Side Fluid	-	Permeate	
Flue Gas Flowrate	kg/hr	150 - 550	
CO_2 Recovery, Purity, and Pressure	% / % / bar	97+%	
Pressure Drops Shell/Tube Side	bar	≈ 0.1 bar (feed to residue)	
Estimated Absorber/Stripper Cost of Manufacturing and Installation	$ / kg/hr		

Definitions:

Membrane Geometry – Flat discs or sheets, hollow fibers, tubes, etc.

Pressure Normalized Flux – For materials that display a linear dependence of flux on partial pressure differential, this is equivalent to the membrane's permeance.

GPU – Gas Permeation Unit, which is equivalent to 10^{-6} cm^3 (1 atm, 0°C)/cm^2/s/cm Hg. For non-linear materials, the dimensional units reported should be based on flux measured in cm^3 (1 atm, 0°C)/cm^2/s with pressures measured in cmHg. Note: 1 GPU = 3.3464×10^{-6} kg mol/m^2-s-kPa [SI units].

Type of Measurement – Either mixed or pure gas measurements; target permeance and selectivities should be for mixture of gases found in de-sulfurized flue gas.

Flow Arrangement – Typical gas-separation module designs include spiral-wound sheets, hollow-fiber bundles, shell-and-tube, and plate-and-frame, which result in either co-current, counter-current, cross-flow arrangements, or some complex combination of these.

Packing Density – Ratio of the active surface area of the membrane to the volume of the module.

Shell-Side Fluid – Either the permeate (CO_2-rich) or retentate (flue gas) stream.

Estimated Cost – Basis is kg/hr of CO_2 in CO_2-rich product gas; assuming targets are met.

Other Parameter Descriptions:

Membrane Permeation Mechanism – Nominally based on solution-diffusion.

Contaminant Resistance – Expected to be resistant to acidic components based on experience to date.

Flue Gas Pretreatment Requirements – Particulate removal and acid component removal to meet compressor specifications, dehydration to meet cold box specifications, mercury (Hg) removal to meet heat exchanger specification.

Membrane Replacement Requirements – Membrane productivity decline was too small to be quantified in bench-scale test with synthetic gases.

Waste Streams Generated – Acidic water.

technology advantages

- Sub-ambient operation improves membrane performance.
- Process design provides partial recovery of the flue gas compression energy.
- Process design provides an economic method of cooling the flue gas feed to the required sub-ambient temperature for optimal membrane operation without external refrigeration.
- The process design can be combined with a novel scheme for contaminant (SO_2, NO_x) removal.

R&D challenges

- Sub-ambient membrane operation requires development of suitable membrane module materials with adequate permeance and selectivity in a commercial membrane module.
- Long-term membrane module performance stability.
- Integration of sub-ambient membrane process, including energy integration with the CPU, as well as energy integration with the power plant, such as compression and turbo-expansion schemes, heat economizers, and energy conservation.
- Flue gas contaminant-specific challenges, including acid gas (NO_x, SO_2) separation, compressor materials of construction, particulate removal, Hg removal, and water management.

results to date/accomplishments

- Conducted closed-loop, bench-scale testing of 6- and 12-inch diameter membrane bundles (equivalent to 2 to 2.5 ton CO_2 per day, or 0.1 MW) at the proposed sub-ambient temperature conditions using synthetic flue gas (CO_2 and N_2).
  - The majority of the testing was run at 200 psi, -45°C, and 18 percent CO_2 feed. Parametric testing was conducted over a broad range of feed conditions: temperature (-25 to -45°C), pressure (160 to 200 pounds per square inch gauge [psig]), and CO_2 feed concentration (18 to 12%).
  - Stability of membrane performance at sub-ambient temperature was successfully demonstrated over eight months; there were no signs of mechanical degradation.
  - The membrane performance was approximately 10 percent lower CO_2/N_2 selectivity and 15 percent higher CO_2 permeance than the estimate based on previous laboratory testing. However, this results in a favorable trade-off between capital and operating cost: a 7 percent increase in specific energy of capture and 40 percent decrease in membrane surface area.
  - Parametric tests indicated that the membrane performance would be best at the coldest temperature and highest feed pressure that can be achieved.
- Conducted laboratory testing of the membrane using synthetic flue gas (CO_2 and N_2) that contains low concentrations (100 parts per million [ppm]) of SO_2, NO_2, and NO using an existing AL cold-test facility.
  - Both SO_2 and NO_2 are more permeable than CO_2. This implies that these contaminants will be efficiently removed with CO_2 into the membrane permeate. NO permeance is intermediate between CO_2 and N_2; hence, NO concentration is expected to be unchanged by the membrane.

- Completed a techno-economic study of the proposed sub-ambient temperature membrane process.
  - The specific energy estimates for CO_2 capture by this process ranges from 216 to 242 kWh per ton CO_2 captured.
  - The conceptual membrane design basis for a 500-MW net coal power plant would include 140 duplex bundle housings containing 36-inch diameter x 40-inch long membrane bundles.
  - The energy capture estimate was coupled with capital cost estimates to calculate the levelized cost of electricity (LCOE) for 90 percent CO_2 capture from an air-fired, 550-MW net coal power plant. This analysis indicates increases in LCOE between 48 and 53 percent.
- Completed a study to determine requirements for conducting future bench-scale testing of the process using actual flue gas.

next steps

The project ended on November 30, 2012.

available reports/technical papers/presentations

"CO_2 Capture By Sub-Ambient Membrane Operation," Final Report, January 2013.

Kulkarni, S., et al., "CO_2 Capture By Sub-Ambient Membrane Operation," presented at the 2012 NETL CO_2 Capture Technology Meeting, Pittsburgh, Pennsylvania, July 2012. *http://www.netl.doe.gov/publications/proceedings/12/co2capture/presentations/1-Monday/S%20Kulkarni-AAL-Sub-ambient%20Membrane.pdf*.

Sanders, E., et al., "CO_2 Capture By Sub-Ambient Membrane Operation," presented at the 2011 NETL CO_2 Capture Technology Meeting, Pittsburgh, Pennsylvania, August 2011. *http://www.netl.doe.gov/publications/proceedings/11/co2capture/presentations/1-Monday/22Aug11-Sanders-AirLiquide-SubAmbient%20Membrane%20Operation.pdf*.

Kulkarni, S., et al., "CO_2 Capture By Sub-Ambient Membrane Operation," presented at the 2010 NETL CO_2 Capture Technology Meeting, Pittsburgh, Pennsylvania, September 2010. *http://www.netl.doe.gov/File%20Library/Research/Coal/ewr/co2/Sudhir-Kulkarni---American-Air-Liquide--DRTC-.pdf*.

DEVELOPMENT OF DENSE CERAMIC MEMBRANES FOR HYDROGEN SEPARATION

primary project goals

Argonne National Laboratory is developing a dense ceramic or cermet (ceramic/metallic composite) membrane for separating hydrogen (H_2) from synthesis gas (syngas) generated during coal gasification, resulting in a high concentration carbon dioxide (CO_2) stream.

technical goals

Develop a membrane that is:

- Chemically stable in the presence of steam, carbon monoxide (CO), CO_2, methane (CH_4), hydrogen sulfide (H_2S), ammonia (NH_3), mercury (Hg), and halides.
- Mechanically stable under high pressures, high temperatures, and temperature cycles.
- Capable of providing industrially significant fluxes at desired levels of H_2 selectivity.

technical content

During coal gasification, large volumes of H_2 and CO_2 are produced. Dense ceramic and cermet membranes are being developed for use with coal gasification process to separate H_2 from CO_2. These membranes must be capable of achieving a high flux and selectivity in order to reduce the surface area required to process the high volumes of gas produced. Reducing a membrane thickness can increase H_2 flux; however, to maintain selectivity, the membrane must remain defect free. Dense ceramic and cermet membranes are capable of providing reduced thickness while avoiding the formation of defects.

High density membranes are achieved by sintering the cermet at high temperatures. Sintering aids have been developed that prevent delamination of the cermet from the porous ceramic substrate. Figure 1 shows a cermet membrane with cobalt nitrate as the sintering aid on a TZ-3Y (zirconium dioxide [ZrO_2] partially stabilized with yttrium oxide [Y_2O_3]) substrate.

The chemical stability of the membranes is also important for their use in the corrosive syngas stream produced from coal gasification. Hydrogen sulfide is a particularly corrosive contaminant to membranes containing palladium (Pd). When H_2S reacts with Pd, palladium sulfide (Pd_4S) forms on the surface of the membrane, which greatly reduces H_2 permeation through the membrane. Therefore, it is important to identify the temperatures and pressures at

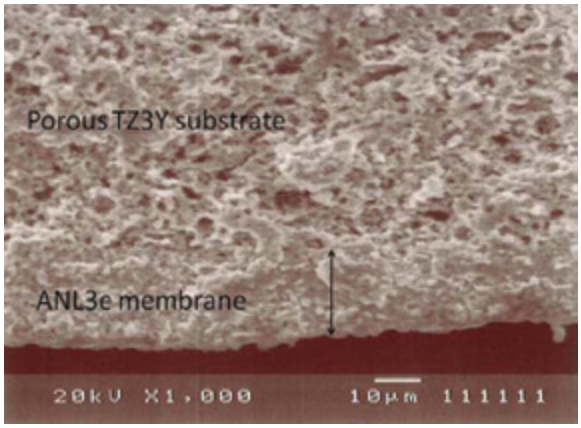

Figure 1: Cross-Sectional View of ANL-3e Thin Film Membrane Sintered at 1,160°C on Porous TZ-3Y Substrate

technology maturity:

Laboratory and Bench-Scale, Using Simulated Flue Gas

project focus:

Dense High Temperature Ceramic Membranes

participant:

Argonne National Laboratory

project number:

FWP-49601

NETL project manager:

Richard Dunst
richard.dunst@netl.doe.gov

principal investigator:

U. (Balu) Balachandran, Argonne National Laboratory
balu@anl.gov

partners:

N/A

performance period:

3/31/98 – 9/30/11

which the membrane is stable. The Pd-containing cermets being developed are stable between about 430 and 680°C (700 K and 950 K) in stable a gas containing 73 percent H_2 with between approximately 60 to 400 parts per million (ppm) H_2S. When the gas contains only 10 percent H_2, the membrane is stable for H_2S concentrations between approximately 8 to 50 ppm. Thin cermet membranes have been tested at 440°C with syngas stream at ≈184 psig.

TABLE 1: ANL MEMBRANE PARAMETER

	Units	Current R&D Value	Target R&D Value
Materials Properties			
Materials of Fabrication for Selective Layer		Pd/TZ-3Y cermet	
Materials of Fabrication for Support Layer		Alumina/Zirconia	
Nominal Thickness of Selective Layer	µm	15	5
Membrane Geometry		Disk/short tube	Long tubes
Maximum Trans-Membrane Pressure	bar	12.2	20.4
Hours Tested Without Significant Degradation		1200	1200
Manufacturing Cost for Membrane Material	$/m^2		
Membrane Performance			
Temperature	°C	400-600	250-500
H_2 Pressure Normalized Flux	GPU or equivalent	160 scfh/ft^2	300 schf/ft^2
H_2/H_2O Selectivity	-		
H_2/CO_2 Selectivity	-	150	10,000
H_2/H_2S Selectivity	-		
Sulfur Tolerance	ppm	50	50
Type of Measurement	-	Mixed gas	Mixed gas
Proposed Module Design			
Flow Arrangement	-		
Packing Density	m^2/m^3		
Shell-Side Fluid	-	Retentate	
Syngas Gas Flowrate	kg/hr		
CO_2 Recovery, Purity, and Pressure	% / % / bar	>99%, 98%, 12	
H_2 Recovery, Purity, and Pressure	% / % / bar	96%, 98%, 1	
Pressure Drops Shell/Tube Side	bar	11	
Estimated Module Cost of Manufacturing and Installation	$ / kg/hr		

Definitions:

Membrane Geometry – Flat discs or sheets, hollow fibers, tubes, etc.

Pressure Normalized Flux – For materials that display a linear dependence of flux on partial pressure differential, this is equivalent to the membrane's permeance.

GPU – Gas Permeation Unit, which is equivalent to 10^{-6} cm^3 (1 atm, 0°C)/cm^2/s/cm Hg. For non-linear materials, the dimensional units reported should be based on flux measured in cm^3 (1 atm, 0°C)/cm^2/s with pressures measured in cm Hg. Note: 1 GPU = 3.3464×10^{-6} kg mol/m^2-s-kPa [SI units].

Type of Measurement – Either mixed or pure gas measurements; projected permeance and selectivities should be for mixture of gases found in pre-conditioned syngas.

Flow Arrangement – Typical gas-separation module designs include spiral-wound sheets, hollow-fiber bundles, shell-and-tube, and plate-and-frame, which result in either co-current, counter-current, cross-flow arrangements, or some complex combination of these.

Packing Density – Ratio of the active surface area of the membrane to the volume of the module.

Shell-Side Fluid – Either the permeate (H_2-rich) or retentate (syngas) stream.

Estimated Cost – Basis is kg/hr of CO_2 in CO_2-rich product gas; assuming targets are met.

Other Parameter Descriptions:

Description of Membrane Permeation Mechanism – In cermets hydrogen transport is in the form of atomic hydrogen (follows Sievert's Law). In mixed-conductor membranes, the transport is in the form of protons.

Contaminant Resistance – The membrane is tolerant to H_2S between 430 and 680°C in gas containing 73 percent H_2 and approximately 60 to 400 ppm H_2S.

Syngas Pretreatment Requirements – Remove H_2S below 50 ppm level.

Membrane Replacement Requirements – Our membranes are modular in nature which allows individual membranes to be replaced without shutting down the entire operation.

Waste Streams Generated – Our membrane generates high purity H_2 and sequestration-ready CO_2. Our membrane doesn't generate waste streams.

Proposed Module Design – Module design not proposed in this project.

technology advantages

- Ceramic phase of the cermet membrane provides 3-D mechanical support that can blunt or deflect crack propagation through the metallic phase.
- Dense ceramic membranes operate at high pressures and temperatures.
- Dense ceramic membranes have no interconnected porosity; therefore, selectivity for H_2 is high.
- Dense ceramic membranes remove H_2 from H_2 and CO_2 mixtures, resulting in a concentrated stream of CO_2 that is near sequestration-ready.

R&D challenges

- Reducing membrane thickness increases flux, but can lead to pin-holes in the membrane, which reduces H_2 selectivity. Therefore, reducing defects in thinner membrane is desired.
- Developing low-temperature sintering methods to avoid loss of Pd to evaporation during sintering at high temperatures.
- Determining stability restrictions in order to limit the reaction of Pd with H_2S, which forms Pd_4S and reduces H_2 flux.
- Understanding chemical stability in the presence of NH_3, Hg, and halides.
- Increasing the resistance to the effects of particulates impacting the membrane surface.
- Developing leak-proof metal/ceramic seals at high pressures under thermal cycling.
- Reducing the cost of the membrane by employing non-precious metals/alloys to form the cermet membrane.

results to date/accomplishments

- Developed dense, cermet membranes that non-galvanically separate H_2 from mixed-gas streams.
- Measured an H_2 flux of 52 cm^3/min-cm^2 at 900°C on an 18-µm thick membrane composed of Pd and TZ-3Y using a feed of 1 atm H_2.
- Achieved H_2 permeation exceeding 150 cm^3/min (0.32 scfh) measured in short, 8-cm long tubular membranes at 600°C and ambient pressures.
- Demonstrated durability of membrane during cycling in temperature and H_2 concentration.
- Maintained flux stability for 1,200 hours in feed stream with 400 ppm H_2S at 900°C.
- Achieved regeneration of sulfur-poisoned, cermet membrane.
- Long-term (≈four months) flux measurements showed that cermet membranes are stable in NETL Test Protocol test 1 gas mixtures.
- Sintering technique developed to densify membranes and improve selectivity.
- Measured a highest hydrogen recovery of ≈96 percent at 625°C using 90 percent H_2/bal. He mixture as feed at 186 psig and argon as sweep gas at 18 psig.
- Measured hydrogen flux of ≈80 cm^3/min-cm^2 (≈160 scfh/ft^2) at 440°C with simulated syngas at 186 psig as feed gas.

next steps

Project completed September 30, 2011.

available reports/technical papers/presentations

Balachandran, U., et al., "Development of Dense Membranes for Hydrogen Purification from Coal Gasification Stream," presented at the Hydrogen + Fuel Cell 2011 Conference (HFC 2011), Vancouver, Canada, May 15-18, 2011

Balachandran, U., et al., "Hydrogen Separation Membranes Annual Report for FY_2010," publication date January 30, 2011, *http://www.ipd.anl.gov/anlpubs/2011/03/69523.pdf*

Zuo, C., et al., "Composite Ni-Ba(Zr0.1Ce0.7Y0.2)O_3 Membrane for Hydrogen Separation," J. Power Sources, 159(2), 1291 (2006)

Balachandran, U., et al., "Development of Cermet Membranes for Hydrogen Separation from Coal Gasification Stream," presented at 26th Annual Pittsburgh Coal Conference, Pittsburgh, Pennsylvania, September 2009.

CO_2 CAPTURE MEMBRANE PROCESS FOR POWER PLANT FLUE GAS

primary project goals

Research Triangle Institute (RTI) set out to develop an advanced hollow-fiber, polymeric membrane-based process that can be cost-effectively retrofitted into current pulverized coal (PC)-fired power plants to capture at least 90 percent of the carbon dioxide (CO_2) from the plant's flue gas.

technical goals

- Develop new fluorinated polymers as membrane materials that have superior CO_2 separation properties compared to conventional and competitive membrane platforms. A minimum selectivity of 30 for CO_2 over nitrogen (N_2) and CO_2 permeance in excess of 300 gas permeance unit (GPU) are targeted. Fluorinated polymers are a promising material platform because they exhibit excellent chemical stability to moisture, sulfur dioxide (SO_2), and nitrogen oxide (NO_x) contaminants present in flue gas.
- Develop next-generation polycarbonate hollow-fiber membranes and membrane modules with higher CO_2 permeance than current commercial polycarbonate membranes.
- Develop and fabricate improved membrane hollow fibers and module designs to handle large flue gas flow rates and high CO_2 permeate flow rates with minimal pressure drop.
- Identify and develop CO_2 capture membrane process design and integration strategies suitable for retrofit installation.

technical content

Project research efforts include development of membrane materials and membrane hollow fibers, membrane module design and fabrication, and process design.

RTI pursued the development of two membrane material platforms. As a near-term membrane platform solution, RTI worked with Generon to develop next-generation, high-flux polycarbonate hollow-fiber membranes and membrane modules with higher CO_2 permeance than current-generation, commercial polycarbonate membranes. Hollow-fiber membranes made from the high-flux polycarbonate have been successfully developed, scaled up, and fabricated into module separation devices. Laboratory-scale membrane modules have been studied with simulated flue gas mixtures with and without flue gas contaminants.

For a longer-term membrane platform solution, RTI worked with Arkema to develop improved CO_2 capture membrane materials based on the polymer chemistry of polyvinylidene fluoride [PVDF], the chemical structure of which is shown in Figure 1 and comprises the [CH_2-CF2]n repeat unit. PVDF is well suited for contact with flue gas, possessing high chemical resistance to acids and oxidants, specific affinity for CO_2 for high CO_2 solubility, and high thermal stability (Td ≈ 340°C). PVDF also features excellent physical and mechanical properties, durability, and longevity suited to the fiber

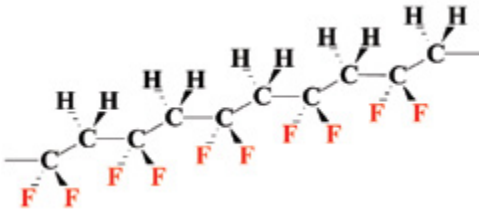

Figure 1: Chemical Structure of PVDF

technology maturity:

Bench-Scale, Using Simulated Flue Gas

project focus:

Hollow-Fiber, Polymeric Membrane

participant:

Research Triangle Institute

project number:

NT0005313

NETL project manager:

Andrew O'Palko
andrew.opalko@netl.doe.gov

principal investigator:

Lora Toy
Research Triangle Institute
ltoy@rti.org

partners:

Arkema
Generon IGS

performance period:

10/1/08 – 9/30/11

extrusion process used to fabricate membrane hollow fibers. However, conventional PVDF is a homopolymer that is semicrystalline and has CO_2/N_2 selectivity of ≈23 and low CO_2 permeance of ≈10 GPU. Arkema has pursued synthesizing and developing advanced, PVDF based copolymers possessing improved CO_2 permeance and selectivity.

In this project, the membrane under development was in the form of hollow fibers that are packaged into compact, high surface area-to-volume module devices. Multiple modules were utilized in a given CO_2 capture membrane system for power plant applications due to the large quantity of flue gas to be processed. The modularity of the membrane separation devices allows for easy adaptation to different levels of CO_2 removal desired by simply adding or subtracting the number of membrane modules used. Figure 2 shows a cross-section of a hollow-fiber membrane module. A single-membrane module consists of hundreds of thousands to more than a million micron-sized diameter hollow fibers bundled together. A couple of individual membrane hollow fibers, a small bundle loop of fibers, and modules of different sizes are shown in Figure 3. As flue gas flows through the membrane fibers, the feed is split into two streams. A permeate stream enriched in CO_2 is produced by the preferential transport of CO_2 across the fiber walls. The remaining flue gas (non-permeate) flows out of the membrane module as a CO_2-depleted retentate stream that is sent to the plant stack for discharge to the atmosphere.

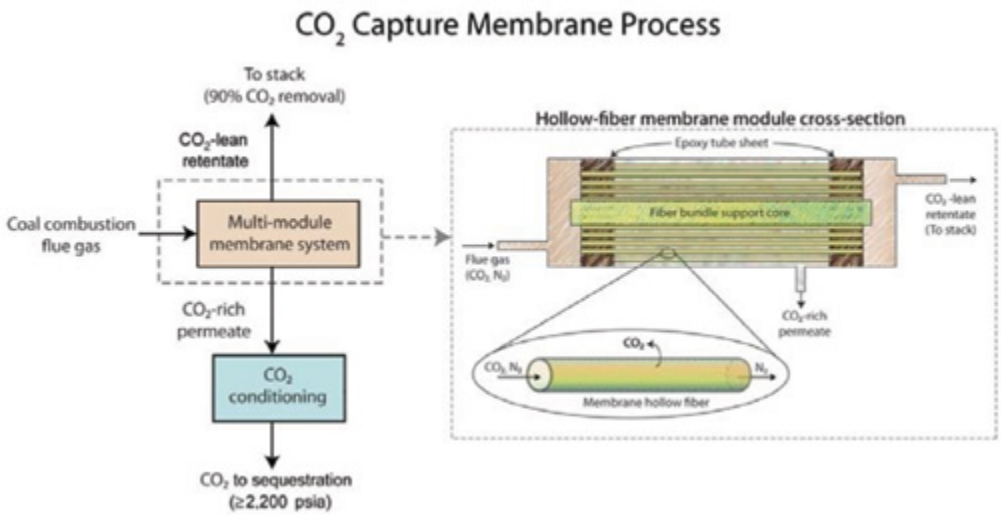

Figure 2: Cross-Section of a Hollow-Fiber Membrane Module

Individual Membrane Hollow Fibers **Small Bundle Loop of Hollow Fibers** **Various Membrane Module Sizes**

Figure 3: Membrane Hollow Fibers

Process simulations for a single-stage membrane process were conducted to determine the sensitivity of CO_2 removal performance and permeate CO_2 purity to different parameters, including membrane flux (permeance), membrane selectivity, membrane fiber dimensions, and membrane pressure driving force. An important outcome of this sensitivity analysis was the understanding that membrane property development should focus on improving both permeance and selectivity together rather than individually.

To achieve high levels of CO_2 capture and purity, RTI developed the three-stage membrane process shown in Figure 4, where the membrane stages are represented by M1, M2, and M3. The flue gas is compressed and fed to the first membrane stage M1. To obtain a net 90 percent removal of CO_2 from the stream ultimately sent to the stack, the CO_2-depleted retentate exiting M1 is fed to M3, which is operated with a permeate-side air sweep to enhance removal of more CO_2. Before being released into the stack, the pressurized M3 retentate is sent to an expander to recover the energy associated with high pressure. The resulting M3 permeate is a CO_2 enriched air stream that is sent back to the boiler. In the second membrane stage M2, the CO_2 captured in the M1

permeate is further concentrated. The resulting CO_2-rich M2 permeate is then compressed and dehydrated to produce the final, sequestration-ready CO_2 capture stream. The M2 retentate is recycled and fed back to M1. The numbers shown in Figure 4 are for a 550-MW coal-fired power plant to achieve 90 percent CO_2 capture and 95 percent CO_2 purity in the capture stream using the high-flux polycarbonate membrane (400 GPU; CO_2/N_2 = 35).

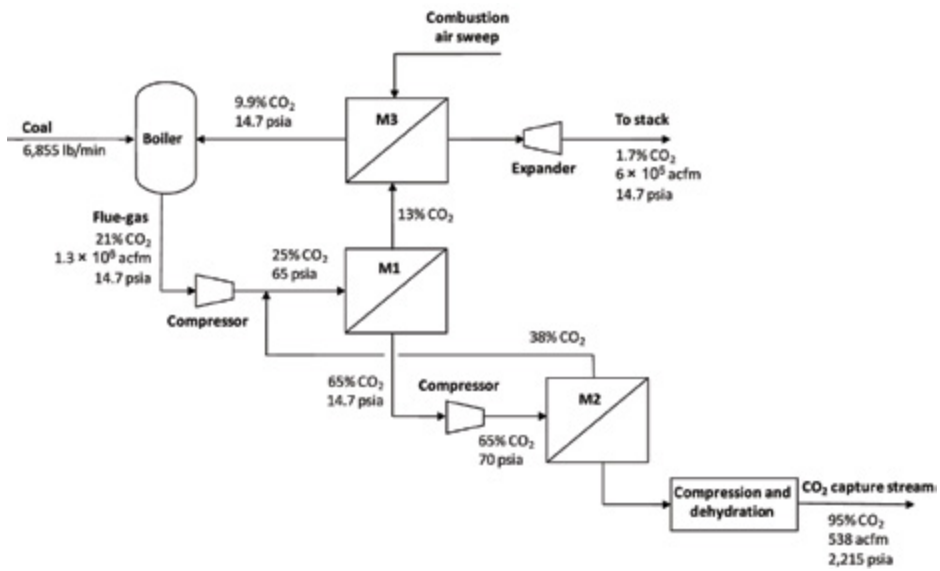

Figure 4: RTI's Three-Stage CO_2 Capture Membrane Process Design

TABLE 1: MEMBRANE PROCESS PARAMETERS

	Units	Current R&D Value	Target R&D Value
Materials Properties			
Materials of Fabrication for Selective Layer	-	Polycarbonate-based and Vinylidene fluoride-based	
Materials of Fabrication for Support Layer	-	N/A	
Nominal Thickness of Selective Layer	µm	0.05	0.05
Membrane Geometry	-	Hollow-fiber	Hollow-fiber
Max Trans-Membrane Pressure	bar	15 (Not tested higher)	15
Hours Tested Without Significant Degradation	-	165	300 (coal)
Manufacturing Cost for Membrane Material	$\$/m^2$	32	8
Membrane Performance			
Temperature	°C	25 – 30	50
CO_2 Pressure Normalized Flux	GPU or equivalent	400	1,000
CO_2/H_2O Selectivity	-	0.04	0.01 – 0.02
CO_2/N_2 Selectivity	-	35	50
CO_2/SO_2 Selectivity	-	≈1	<0.5 or >2
Type of Measurement	-	Ideal and mixed	Ideal and mixed
Proposed Module Design			
Flow Arrangement	-	Countercurrent	
Packing Density	m^2/m^3	9,000	
Shell-Side Fluid	-	Permeate	
Flue Gas Flowrate	kg/hr	(Unknown at this stage)	
CO_2 Recovery, Purity, and Pressure	% / % / bar	90%, 95+%, 1 bar	

TABLE 1: MEMBRANE PROCESS PARAMETERS

	Units	Current R&D Value	Target R&D Value
Pressure Drops Shell/Tube Side	bar	<0.1	
Estimated Absorber/Stripper Cost of Manufacturing and Installation	$ / kg/hr	(Unknown at this stage)	

Definitions:

Membrane Geometry – Flat discs or sheets, hollow fibers, tubes, etc.

Pressure Normalized Flux – For materials that display a linear dependence of flux on partial pressure differential, this is equivalent to the membrane's permeance.

GPU – Gas Permeation Unit, which is equivalent to 10^{-6} cm^3 (1 atm, 0°C)/cm^2/s/cm Hg. For non-linear materials, the dimensional units reported should be based on flux measured in cm^3 (1 atm, 0°C)/cm^2/s with pressures measured in cmHg. Note: 1 GPU = 3.3464×10^{-6} kg mol/m^2-s-kPa [SI units].

Type of Measurement – Either mixed or pure gas measurements; target permeance and selectivities should be for mixture of gases found in de-sulfurized flue gas.

Flow Arrangement – Typical gas-separation module designs include spiral-wound sheets, hollow-fiber bundles, shell-and-tube, and plate-and-frame, which result in either co-current, counter-current, cross-flow arrangements, or some complex combination of these.

Packing Density – Ratio of the active surface area of the membrane to the volume of the module.

Shell-Side Fluid – Either the permeate (CO_2-rich) or retentate (flue gas) stream.

Estimated Cost – Basis is kg/hr of CO_2 in CO_2-rich product gas; assuming targets are met.

Other Parameter Descriptions:

Membrane Permeation Mechanism – Gas permeation in the high-flux polycarbonate and PVDF-based membrane platforms occurs due to a partial pressure driving force across the membrane. The specific permeation mechanism obeyed is the solution-diffusion model for gas transport in nonporous polymers. According to this model, preferential permeation of certain gas species occurs because they are more soluble in the polymer membrane, have a higher diffusion coefficient in the polymer membrane, or both. In this project, the preferentially permeated species CO_2 has both greater diffusivity and greater solubility than N_2 in the polycarbonate- and PVDF-based membranes.

Contaminant Resistance – Membrane resistance to contaminant species (NO_x, SO_2, moisture) found in flue gas was investigated in continuous, seven-day, bench-scale separation performance stability tests with contaminant-containing CO_2/N_2 mixtures. The permeance of the high-flux polycarbonate membrane showed some sensitivity to contaminants such as NO_x, but its selectivity was stable. The new PVDF-based membrane material platform, because of its intrinsically high-chemical resistance, exhibited excellent permeability (permeance) and selectivity stability in the contaminant tests.

Flue Gas Pretreatment Requirements – Before being fed to the membrane system, the flue gas from the plant stack must be conditioned to remove solid particulates and any condensed/entrained liquids (essentially liquid water).

Membrane Replacement Requirements – Based on seven-day, bench-scale contaminant resistance testing results, replacement cycle for high-flux polycarbonate membranes is anticipated to be roughly every five years. In the presence of flue-gas contaminants, the high-flux polycarbonate membrane has shown gradual permeance loss without loss in selectivity in continuous, seven-day testing. For PVDF-based membranes, the replacement cycle is anticipated to be every 10 years because of the excellent chemical and separation performance stability exhibited by them in the presence of flue-gas contaminants in seven-day tests. Much longer-term contaminant exposure testing of these membranes to real coal-derived flue gas, however, is recommended to confirm/refine the above membrane replacement requirements.

Waste Streams Generated – Because the membrane permeates and concentrates water into the CO_2 capture stream, a liquid water stream is recovered by the membrane process during compression of the capture stream to sequestration pressure. A water condensate stream is also produced upstream of membrane stages M1 and M2 because of compression of their feed gas streams, followed by cooling of this compressed gas with cooling water to the optimum membrane operating temperature. The quality of these liquid water streams is not known and will need to be determined.

technology advantages

Membrane-based processes have the potential to provide PC-fired power plants with a cost-effective technology option for CO_2 capture. They are inherently energy-efficient because the membrane enables passive separation of gases. Their compact footprint and modular nature allows for easy installation into an existing PC-fired plant, and, with no moving parts, they are simple to operate and maintain. In addition, the hollow fiber membrane approach taken in this project is particularly well suited for high-volume applications such as the large flue gas volumes that must be handled in post-combustion carbon capture. Hollow-fiber modules have much higher membrane packing density and lower cost-per-membrane area than other module types. The hollow-fiber membrane tubes are economically produced on a commercial scale by using existing fiber manufacturing equipment technology.

R&D challenges

Flue gas properties, such as low CO_2 concentration of 13 to 15 percent, low flue gas pressure of 1 atm, large flue gas volumes, and the presence of moisture and contaminants (sulfur oxides [SO_x], NO_x, and particulate matter), can pose certain challenges for a conventional membrane separation process. These technology challenges are being addressed in this project through the development of new membrane materials with improved CO_2 separation properties and chemical resistance, improved membrane module design and engineering, and novel process design and integration strategies.

results to date/accomplishments

- Development and scale-up of Generon next-generation, high-flux polycarbonate membrane hollow fibers with up to four times higher CO_2 flux (410 GPU) than that of Generon standard polycarbonate membrane fibers.
  - CO_2/N_2 selectivity of high-flux polycarbonate hollow-fiber membrane was comparable to that of standard (current-generation) polycarbonate hollow-fiber membrane. However, it was only 60 to 70 percent of its intrinsic CO_2/N_2 selectivity (35 to 37), meaning that the high-flux polycarbonate membrane properties could still be improved.
  - Fibers of high-flux polycarbonate with 25 percent larger dimensions were successfully spun as an option for managing parasitic axial pressure drops in the module.
  - High-flux polycarbonate membrane would be best operated at temperatures below room temperature to benefit from substantial increase in CO_2/N_2 selectivity without much decrease in CO_2 permeance due to its weak temperature dependence.
  - High-flux polycarbonate membrane displayed some sensitivity to flue-gas contaminants (NO_x and SO_2), which led to a permeance decline but had minimal to no effect on CO_2/N_2 selectivity. This observed sensitivity did not seem to degrade the membrane as it recovered much of its original properties when the contaminants were removed. In practice, therefore, feed pretreatment should be considered for this membrane.
- Successful formation of Generon high-flux polycarbonate membrane fibers into lab-scale modules and larger prototype (2,200 ft^2) modules.
- Development and synthesis of novel Arkema VDF-based copolymers with improved CO_2 permeance and improved CO_2/N_2 selectivity.
  - Copolymerization of a bulky, low-dipole Comonomer A into the VDF chain backbone can increase gas permeability by disrupting chain packing density and crystallinity in the polymer matrix.
  - VDF-co-A copolymer family was developed with up to 17 to 18 times higher CO_2 permeability than the base PVDF homopolymer, while maintaining the CO_2/N_2 selectivity of 24 of the base PVDF.
  - Copolymerization of a bulky, high-dipole Comonomer B into the VDF chain backbone can increase CO_2/N_2 selectivity by enhancing the CO_2 affinity of the polymer while also improving gas permeability relative to the base PVDF homopolymer.

- VDF-co-B copolymer family was developed with 2.5 to 3 times higher CO_2/N_2 selectivity and six times higher CO_2 permeability than base PVDF homopolymer.
- Strong temperature dependence of CO_2 permeance in VDF-based polymers could be exploited as a key process variable for increasing and optimizing CO_2 permeance to increase gas processing throughput in the capture process while maintaining reasonable CO_2 removal.
- VDF-based polymer platform demonstrated excellent stability of its gas separation properties to contaminants SO_2, NO_x, and water vapor.

- Fabrication of the first developmental hollow fibers from new Arkema VDF-based copolymer platform.
  - VDF-A.2 was down-selected for fiber development because it had among the best balance of CO_2 permeability and selectivity of the new copolymers in this fluorinated platform.
  - Synthesis of VDF-A.2 was successfully scaled up to pilot scale to prepare 200 pounds of this resin for fiber development.
  - Fiber tackiness, fiber shape stability, and solvent extraction kinetics were identified as key issues that must be addressed and managed for the VDF-based polymers.
  - Hollow-fiber cores of the VDF-based materials were successfully spun on commercial fiber-spinning equipment. Fibers had good gas flux but exhibited no gas selectivity. Development of a membrane structure with gas selectivity will require additional research and development (R&D) effort.
- Development of three-stage CO_2 capture membrane process design to achieve 90 percent CO_2 capture and 95 percent CO_2 purity.
- Completed techno-economic evaluation of three-stage CO_2 capture membrane process design based on Generon's high-flux polycarbonate hollow-fiber membrane assuming a CO_2 permeance of 400 GPU and CO_2/N_2 selectivity of 35.
  - Increase in levelized cost of electricity (LCOE) estimated for subcritical coal power plant with RTI membrane process was estimated to be ≈73 to 82 percent over that of a plant with no capture, with the LCOE increase depending strongly on compressor cost.
  - Compressor costs made up the majority of equipment costs for the process, with 64 percent of costs attributed to compressors needed for the CO_2 separation process and 10 percent to the compressor for compression/drying of the captured CO_2 product.
  - Cost of CO_2 capture was estimated to be ≈\$42/ton-CO_2.
  - The energy penalty was the biggest contributor to the LCOE.

next steps

This project ended on September 30, 2011.

available reports/technical papers/presentations

"CO_2 Capture Membrane Process for Power Plant Flue Gas," Final Report, April 2012. *http://www.netl.doe.gov/publications/factsheets/program/05313%20Final%20Report%20April%202012.pdf*.

Toy, L., et al., "CO_2 Capture Membrane Process for Power Plant Flue Gas," presented at the 2011 NETL CO_2 Capture Technology Meeting, Pittsburgh, Pennsylvania, August 2011. *http://www.netl.doe.gov/File%20Library/Research/Coal/ewr/co2/22Aug11-Toy-RTI-CO2-Capture-Membrane-Process.pdf*.

Toy, L., et al., "CO_2 Capture Membrane Process for Power Plant Flue Gas," presented at the 2010 NETL CO_2 Capture Technology Meeting, Pittsburgh, Pennsylvania, September 2010. *http://www.netl.doe.gov/File%20Library/Research/Coal/ewr/co2/Lora-Toy---NT0005313.pdf*.

Toy, L., et al., "CO_2 Capture Membrane Process for Power Plant Flue Gas," presented at the Annual NETL CO_2 Capture Technology for Existing Plants R&D Meeting, Pittsburgh, Pennsylvania, March 2009. *http://www.netl.doe.gov/File%20Library/Research/Coal/ewr/co2/5313-RTI-membrane--Toy--mar09.pdf*.

DEVELOPMENT OF BIOMIMETIC MEMBRANES FOR NEAR-ZERO PC POWER PLANT EMISSIONS

primary project goals

Carbozyme set out to develop an enzyme-based, contained liquid membrane (CLM) to extract carbon dioxide (CO_2) from coal and natural gas combustion flue gas. Carbozyme also set out to evaluate a state-of-the-art electrodialytic (EDI) method for CO_2 capture, comparing its performance with that of the CLM.

technical goals

- Scale-up the enzyme-catalyzed, CLM permeator design (4 to 400 m^2) to include multiple units organized as a skid (3×40 m^2) for testing with various coal ranks and natural gas.
- Implement a pretreatment conditioner to ensure that the flue gas constituents will not adversely impact the CLM permeator.
- Validate technology to cost-effectively produce carbonic anhydrase (CA) enzymes for the CLM.
- Test and analyze three different EDI test cells: a controlled pH resin wafer, a hollow fiber fed bipolar membrane (BPM), and an ion exchange membrane-resin wafer (IEM-RW).
- Conduct a commercialization study for both the CLM and EDI technologies.

technical content

The enzyme-based CA CLM membrane process mimics the natural process for removing CO_2 from an organism. An organism's blood stream is used to transport oxygen (O_2) and CO_2 to and from its cells, respectively. CA is an enzyme in the blood that captures the CO_2 from the cells and converts it to bicarbonate (HCO_3^-). The enzyme reverses this reaction in the lungs, allowing the CO_2 to be exhaled. Figure 1 shows the configuration for the enzyme-based CA CLM membrane process Carbozyme set out to develop. The CA CLM membrane is able to incorporate the absorption and stripping processes into a single unit. A membrane module consists of two groups of hollow fibers – one group contains the incoming CO_2 lean flue gas, and the second group contains the CO_2 rich permeate stream. The CA enzyme is contained in a thin-film liquid between the two groups of fibers. The CA helps

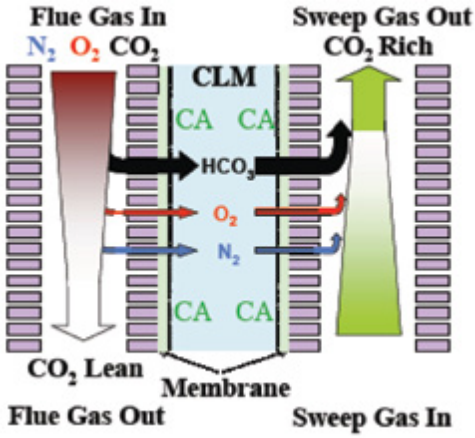

Figure 1: Configuration for Carbozyme-Developed, Enzyme-Based Carbonic Anhydrase Contained Liquid Membrane

technology maturity:

Laboratory/Bench-Scale, Using Simulated Flue Gas

project focus:

Biomimetic Membrane

participant:

Carbozyme

project number:

FC26-07NT43084
FG26-06NT42824

NETL project manager:

José Figueroa
jose.figueroa@netl.doe.gov

principal investigator:

Michael Trachtenberg
Carbozyme, Inc.
mct@cz-na.com

partners:

Argonne National Laboratory
EERC
Electrostep
Kansas State University
Siemens
SRI
Visage Energy

performance period:

3/28/07 – 7/31/09

catalyze the CO_2 to HCO_3^- to promote permeation across the CO_2 lean membrane and reverses the process, promoting permeation across the CO_2-rich membrane. CA is one of the fastest acting enzymes with a turnover rate of 600,000 katals (catalyzes the hydration of 600,000 molecules of CO_2 per second per molecule of CA).

Figure 2 shows a process schematic for the CA CLM. Pretreated combustion flue gas from the boiler enters the membrane. A vacuum system is used to provide the driving force across the membrane. After the CO_2 is separated from the flue gas, it goes through a knockback condenser for water removal prior to compression. The resulting product is a 95 percent pure CO_2 stream. The remaining flue gas is sent to the plant stack.

The concentrated ammoniated solution is used to capture CO_2 and hydrogen sulfide (H_2S) from synthesis gas (syngas) at high pressure. This technique reduces the size of the CO_2 stripper and operates at high pressure, reducing CO_2 compression needs; both reduce electric power consumption. AC has high net CO_2 loading, is a low-cost and readily available reagent, and requires little solvent makeup; the solubility of hydrogen (H_2), carbon monoxide (CO), and methane (CH_4) in absorber solution is extremely low.

The project, in its first phase, constructed a bench-scale batch reactor unit to test the technology at SRI's facility in California. Testing was performed to validate the concept and to determine the optimum operating conditions.

Absorber testing was conducted to first determine the solubility of shifted-gas components (H_2, CO, nitrogen [N_2], argon [Ar]), then to determine the reactivity of CO_2 and H_2S; mixed-gas testing was performed to determine the relative reaction kinetics.

Regenerator testing was conducted to determine CO_2 and H_2S release characteristics, as well as the relative kinetics of CO_2 and H_2S release. Optimal operating conditions derived in bench-scale testing will be used at the pilot-scale test.

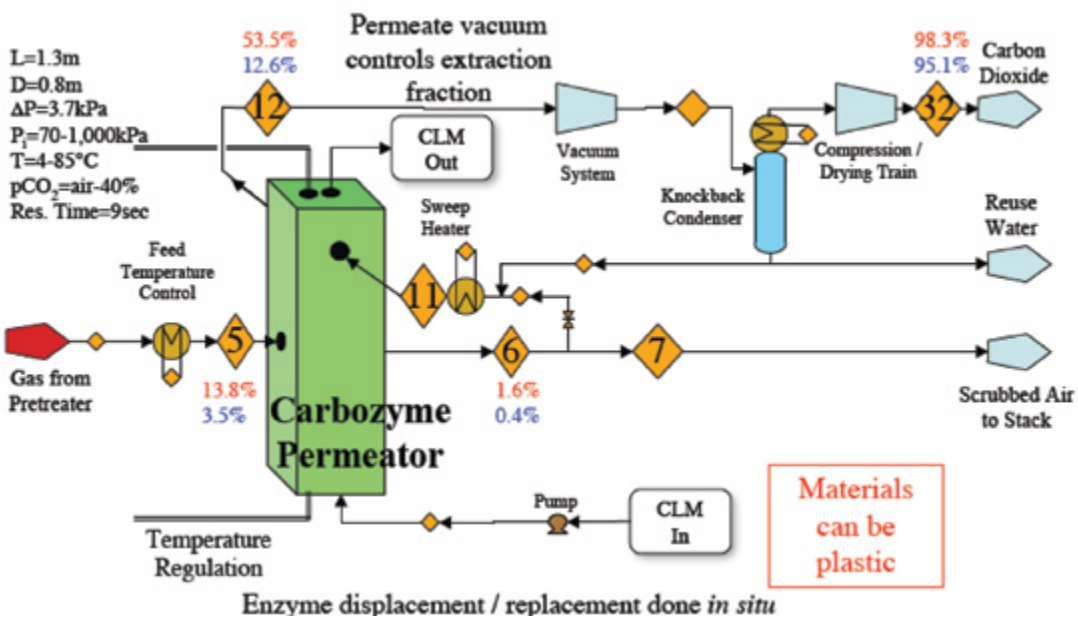

Figure 2: Process Schematic for the Carbonic Anhydrase Contained Liquid Membrane

technology advantages

- The CA enzyme catalyst does not contain any toxic chemicals or byproducts, making it more environmentally friendly than competing technologies.
- The CA enzyme catalyst has a fast CO_2 production rate with low energy requirements and boosts separation and purification due to its low nitrogen (N_2) and O_2 solubility.
- The enzyme catalyst is not vulnerable to oxidation or the formation of stable salts.
- The CA CLM system requires only minimal pumping and no heat exchangers, allowing it to consume 30 to 50 percent less energy compared to competing technologies.
- The CA CLM system recycles nearly all of its water and a portion of its waste heat.
- The modular design of the membrane makes it easy to manufacture, install, and scale up.

R&D challenges

- The cost of the purified CA enzyme remains high and production costs will need to be reduced in order to be considered economically viable.
- Early immobilization of the CA enzyme needs to be addressed.
- Sulfur dioxide (SO_2) acidification of the carbonate carrier fluid needs to be addressed via flue gas pretreatment.
- Ionized mercury in the flue gas could reduce enzyme activity.

results to date/accomplishments

Development progress for the CA CLM process was made in several categories, such as flue gas stream analysis and conditioning, enzyme selection, enzyme immobilization, membrane module construction, and economic analysis.

Specific accomplishments include:

- Developed an immobilized CA enzyme catalyst based on a thermophilic form of CA that can maintain a high activity at elevated temperature (≈50°C). The enzyme was immobilized using a proprietary surface activation method using an ultrathin polyamino acid (PAA) layer that can be removed and replaced, as needed. Enzyme testing indicated up to 80 percent of initial activity was retained over a 60-day period.
- Developed a 0.5-m^2 bench-scale CLM permeator that combines absorption and desorption in a single house through use of dual hollow-fiber, spiral-wound, polymer membranes. In this configuration, CO_2 capture is driven by a combination of pressure, vacuum, and temperature. More than 90 percent CO_2 capture was achieved during testing.
- Developed an alternate process technology based on separate absorption/desorption modules using single hollow-fiber, spiral-wound, polymer membranes.
- Fabricated an 11-m^2 CLM module for scale-up testing.
- Developed and tested a flue gas pre-treatment system for the CLM process.
- Developed computer modeling for CLM process components and integrated systems.
- Developed and tested a second technology based on a resin-wafer EDI system that uses a pH shift to accomplish CO_2 absorption/desorption.

next steps

This project ended on July 31, 2009.

available reports/technical papers/presentations

"Development of Biomimetic Membranes for Near Zero PC Power Plant Emissions," Final Report for Project #43084, March 2011.

"Capture of CO_2 by the Carbozyme Permeator," 8th Annual Conference on Carbon Capture and Sequestration, Pittsburgh, Pennsylvania, May 2009.

"Development of Biomimetic Membranes for Near-Zero Power Plant Emissions," Annual NETL CO_2 Capture Technology for Existing Plants R&D meeting, Pittsburgh, Pennsylvania, March 2009.

"Membrane-based, Enzyme Facilitated, Efficient, Carbon Dioxide Capture," 9th International Conference on Greenhouse Gas Control Technologies, Washington, DC, November 2008.

"Progress on Carbozyme's HFCLM Permeator Technology Scale-up Project," 7th Annual Conference on Carbon Capture and Sequestration, Pittsburgh, Pennsylvania, May 2008.

"Biomimetic Membrane for CO_2 Capture from Flue Gas," Final Report for Project #42824, August 2007.

NOVEL DUAL FUNCTIONAL MEMBRANE FOR CONTROLLING CARBON DIOXIDE EMISSIONS FROM FOSSIL-FUELED POWER PLANTS

technology maturity:

Laboratory-Scale, with Simulated Flue Gas

project focus:

Dual Functional, Silica-Based Membrane

participant:

University of New Mexico

project number:

FG26-04NT42120

NETL project manager:

José Figueroa
jose.figueroa@netl.doe.gov

principal investigator:

C. Jeffrey Brinker
University of New Mexico
cjbrink@sandia.gov

partners:

T3 Scientific LLC

performance period:

8/23/04 – 4/30/09

primary project goals

The University of New Mexico set out to develop a new, dual-functional, silica-based membrane for carbon dioxide (CO_2) emissions capture from coal-fired power plants.

technical goals

- Achieve a membrane CO_2/nitrogen (N_2) selectivity of 100 and a CO_2 permeance of 1,000 gas permeance units (GPU) or greater.
- Formulate a sol-gel composition to be used in the preparation of clear aminosilicate coatings for membrane deposition onto the siliceous support matrix.
- Setup multi-component gas separation tests for preliminary membrane performance analysis.
- Refine the sol-gel compositions for optimal membrane deposition.
- Study the influence of sulfur dioxide (SO_2), water vapor, and trace oxygen (O_2) on membrane performance.
- Optimize membrane deposition on alternative economical membrane supports.
- Conduct preliminary economic analysis of the membrane process for post-combustion CO_2 capture.
- Identify a processing window that allows reproducible preparation of an asymmetric microporous silica membrane.
- Stabilize membrane performance through a nickel (Ni)-doping approach.
- Prepare an ultra-thin silica membrane using a plasma-assisted, atomic layer deposition technique (PA-ALD).

technical content

The dual-functional, silica-based membrane is prepared by a unique sol-gel dip-coating process for depositing a microporous amino-silicate membrane on a porous tubular ceramic support. It consists of a microporous inorganic siliceous matrix, with amine functional groups physically immobilized or covalently bonded on the membrane pore walls. Strong interactions between the permeating CO_2 molecules and the amine functional membrane

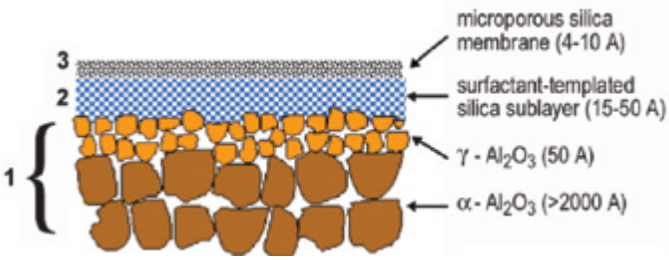

Figure 1: Cross-Section of Membrane

pores enhance surface diffusion of CO_2 on the pore wall of the membrane, subsequently blocking other gases. The membrane is composed of three distinct layers as shown in Figure 1: (1) a commercially available tubular or hollow-fiber ceramic support; (2) a mesoporous surfactant-templated silica sub-layer with pore size 15-50 Å; and (3) a microporous aminosilicate gas separation membrane layer with pore size 4-10 Å.

TABLE 1: MEMBRANE PROCESS PARAMETERS

	Units	Current R&D Value	Target R&D Value
Materials Properties			
Materials of Fabrication for Selective Layer	-	Aminosilicate/doped-silicate	
Materials of Fabrication for Support Layer	-	Surfactant-templated silica on alumina	
Nominal Thickness of Selective Layer	µm		
Membrane Geometry	-	Plate-and-frame	Hollow-fiber
Max Trans-Membrane Pressure	bar	3 bar	N/A
Hours Tested Without Significant Degradation	-	168 hrs	100 hrs
Manufacturing Cost for Membrane Material	$/m^2		
Membrane Performance			
Temperature	°C	25 – 250°C	25 – 80°C
CO_2 Pressure Normalized Flux	GPU or equivalent	CO_2: 400 GPU	CO_2: 1,000 GPU
CO_2/H_2O Selectivity	-		
CO_2/N_2 Selectivity	-	CO_2/N_2=80-100 (dry feed); CO_2/N_2 = 50-60 (humidified feed)	CO_2/N_2 = 100
CO_2/SO_2 Selectivity	-		
Type of Measurement	-	Mixed gas	Mixed gas
Proposed Module Design			
Flow Arrangement	-		
Packing Density	m^2/m^3	980	
Shell-Side Fluid	-		
Flue Gas Flowrate	kg/hr		
CO_2 Recovery, Purity, and Pressure	% / % / bar	>90%	
Pressure Drops Shell/Tube Side	bar	0.01 – 0.02	
Estimated Absorber/Stripper Cost of Manufacturing and Installation	$ / kg/hr		

Definitions:

Membrane Geometry – Flat discs or sheets, hollow fibers, tubes, etc.

Pressure Normalized Flux – For materials that display a linear dependence of flux on partial pressure differential, this is equivalent to the membrane's permeance.

GPU – Gas Permeation Unit, which is equivalent to 10^{-6} cm^3 (1 atm, 0°C)/cm^2/s/cm Hg. For non-linear materials, the dimensional units reported should be based on flux measured in cm^3 (1 atm, 0°C)/cm^2/s with pressures measured in cmHg. Note: 1 GPU = 3.3464×10^{-6} kg mol/m^2-s-kPa [SI units].

Type of Measurement – Either mixed or pure gas measurements; target permeance and selectivities should be for mixture of gases found in de-sulfurized flue gas.

Flow Arrangement – Typical gas-separation module designs include spiral-wound sheets, hollow-fiber bundles, shell-and-tube, and plate-and-frame, which result in either co-current, counter-current, cross-flow arrangements, or some complex combination of these.

Packing Density – Ratio of the active surface area of the membrane to the volume of the module.

Shell-Side Fluid – Either the permeate (CO_2-rich) or retentate (flue gas) stream.

Estimated Cost – Basis is kg/hr of CO_2 in CO_2-rich product gas; assuming targets are met.

Other Parameter Descriptions:

Contaminant Resistance – SO_2 > 10 parts per million (ppm).

Flue Gas Pretreatment Requirements – Particulate removal.

Waste Streams Generated – None.

technology advantages

The dual-functional, silica-based membrane will have a higher CO_2 selectivity and permeance compared to conventional membranes that separate gases based on differences in molecular size only.

R&D challenges

- The permeance of the new membrane will need to be increased by a factor of five to meet the research and development (R&D) target.
- The selectivity for the new membrane must remain constant under temperatures of 50 to 70°C and high humidity conditions.
- The presence of particulates in the flue gas could adversely affect membrane performance.
- Previous membrane designs suffered from a gradual reduction in permeance and selectivity under elevated temperature and humidity conditions due to pore shrinkage/blockage.

results to date/accomplishments

- Three classes of microporous, sol-gel derived, silica-based membranes were developed for CO_2 removal under simulated flue gas conditions.
- A novel class of amine-functional, microporous silica membranes was prepared using an amine-derivatized alkoxysilane precursor, exhibiting enhanced CO_2:N_2 selectivity (>70) in the presence of water vapor, but its CO_2 permeance (<1.25 cm^3[STP]/cm^2-min-atm [≈275 GPU]) was below the target.
- Pure siliceous membranes showed higher CO_2 permeance (1.5-2 cm^3[STP]/cm^2-min-atm [≈330-440 GPU]), but subsequent densification occurred under prolonged simulated flue gas conditions.
- Nickel oxide (NiO) was incorporated into the membrane's microporous network to retard densification and achieved CO_2 permeance of 0.5 cm^3(STP)/cm^2-min-atm (≈110 GPU) and CO_2:N_2 selectivity of ≈50 after 163 hours exposed to simulated flue gas conditions.
- The implementation of a novel ALD processing scheme shows evidence that a vapor-processed membrane can exhibit higher thermal/structural stability combined with higher flux and selectivity compared to the traditional liquid phase processing approach (sol-gel).

next steps

This project ended on April 30, 2009.

available reports/technical papers/presentations

"Novel Dual-Functional Membrane for Controlling Carbon Dioxide Emissions from Fossil Fuel Power Plants," Final Scientific/Technical Report, August 2009. *http://www.netl.doe.gov/File%20Library/Research/Coal/ewr/co2/2009Novel-Dual-Functional-Membrane-for-Controlling-Carbon-Di.pdf*.

"Tubular Ceramic-Supported Sol-Gel Silica-Based Membranes for Flue Gas Carbon Dioxide Capture and Sequestration," J. Memb. Sci., 341 (2009) 30-36.

"Novel Dual-Functional Membrane for CO_2 Capture," Seventh Annual Carbon Capture and Sequestration Conference, Pittsburgh, Pennsylvania, May 2008.

"Anodic Alumina Supported Dual-Layer Microporous Silica Membranes," J. Memb. Sci., 287, (2007) 157-161.

"Microporous Sol-Gel Derived Aminosilicate Membrane for Enhanced Carbon Dioxide Separation," Separation and Purification Technology, 42(3) (2005) 249-257.

APPENDIX B: CARBON DIOXIDE CAPTURE TECHNOLOGY SHEETS

OXY-COMBUSTION

OXYGEN TRANSPORT MEMBRANES FOR INDUSTRIAL APPLICATIONS

primary project goals

Praxair is optimizing oxygen transport membrane (OTM) performance, materials, and process configurations leading to subsequent development-scale testing of OTM technology for synthesis gas (syngas) production applications, providing valuable experience needed to develop commercial OTM technology in industrial applications and future utility-scale power generation applications.

technical goals

Phase I:

- Develop more detailed OTM cost and performance estimates based on experiments.
- Develop a preliminary conceptual design and cost models for a pilot plant utilizing OTM technology.
- Identify the rate-limiting steps for oxygen (O_2) separation through the OTM and address kinetic or mass transport limitations by appropriate materials selection and membrane architecture.
- Develop procedures to manufacture one-third pilot-size OTM tubes; test them for O_2 flux and durability in carbon monoxide (CO), hydrogen (H_2), carbon dioxide (CO_2), and water (H_2O) fuel streams with the presence of sulfur impurities.
- Test OTMs in a coal gas OTM reactor.

Phase II:

- Demonstrate the ability to produce OTM tubes with the appropriate dimensions and manufacturing yield required to proceed with pilot demonstration.
- Deliver preliminary engineering cost estimate for OTM pilot plant system (OTM partial oxide reactor [POx] and Boiler).

Phase III:

- Develop technology to support the conversion of natural gas to syngas utilizing oxygen from a ceramic membrane in a development-scale syngas system.
- Develop technology to support the oxy-combustion of a syngas fuel utilizing oxygen from a ceramic membrane with a portion of the heat of combustion utilized to raise saturated steam and with the primary flue gas products being comprised of H_2O and CO_2.
- Further develop ceramic materials and processes to support high-volume, low-cost manufacturing and stable performance over an anticipated commercial operation lifetime.

technology maturity:

Laboratory Scale

project focus:

Oxygen Transport Membrane-Based Syngas Production

participant:

Praxair

project number:

FC26-07NT43088

NETL project manager:

Jose Figueroa
jose.figueroa@netl.doe.gov

principal investigator:

Sean M. Kelly P.E.
Praxair, Inc.
sean_kelly@praxair.com

partners:

ENrG Inc.
The Shaw Group
The University of Utah

performance period:

4/30/07 – 9/30/15

As oxy-combustion is currently practiced, a pure stream of O_2 is separated in a cryogenic air separation unit (ASU) and then delivered to a boiler for combustion. OTM technology integrates O_2 separation and combustion in one unit. An OTM consists of an inert porous support coated with a dense gas separation layer, as illustrated in Figure 1. Air contacts the separation layer where molecular O_2 reacts with O_2 vacancies and electrons on the membrane surface to form O_2 ions, which are transported through O_2 vacancies in the separation layer using a chemical potential difference as the driving force. Fuel species (CO, H_2, methane [CH_4], etc.) located on the porous support side diffuse through the support and react with O_2 ions at the membrane surface to form oxidation products (H_2O, CO_2) and release electrons, which are transported back through the separation layer.

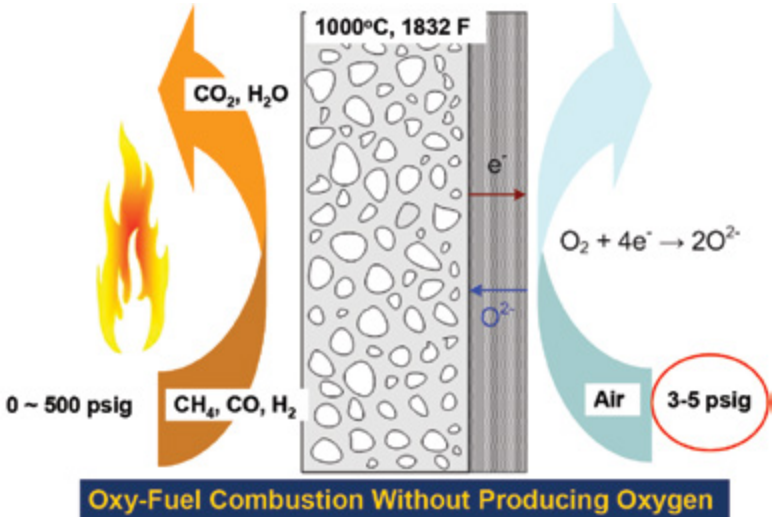

Figure 1: Schematic of Ceramic OTM

Several process concepts incorporating ceramic OTM are being explored to understand their impact on process economics. One process concept under development is shown in Figure 2. In this process, coal is first gasified in an O_2-blown gasifier to generate syngas. The syngas is optionally reacted in an OTM POx to raise its temperature. The hot syngas is expanded to recover power. After the syngas is expanded to ambient pressure, it is sent to the OTM boiler. Within the OTM boiler, syngas is first passed over an array of OTM tubes. Air is preheated by heat exchange with the O_2-depleted air and then passed on to the feed side of the OTM tubes. Oxygen from the air transports across the membrane and reacts with the syngas. Since the rate of O_2 transport is limited by the availability of the membrane area, the oxidation of syngas will take place over a large area (the OTM zone) within the boiler. As the syngas gets oxidized, the driving force for O_2 transport will decrease and the required membrane area will increase. For practical reasons, the OTM will be used to supply O_2 to the fuel side until 80 to 90 percent fuel utilization is achieved. The remainder of fuel will be combusted using O_2 supplied from the cryogenic ASU.

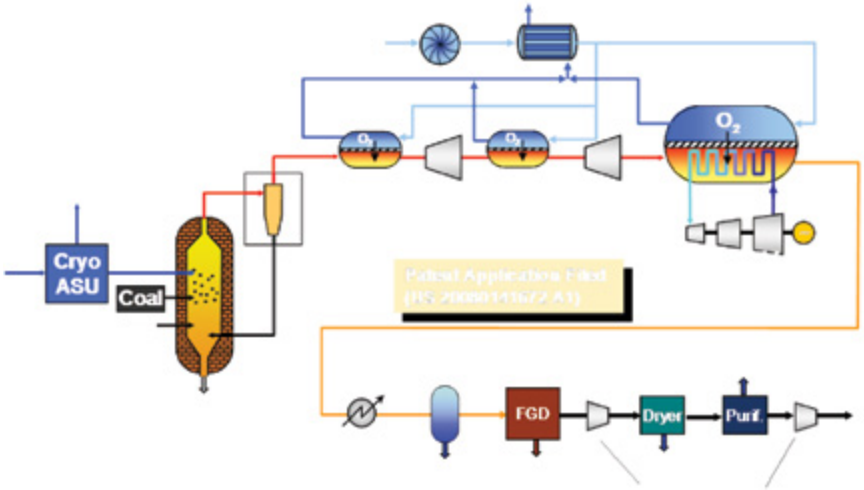

Figure 2: OTM-Based Process for Power Generation with CO_2 Capture

The thermal energy released within the boiler is used for steam generation. In the OTM zone, steam tubes will be interspersed with the OTM tubes such that the temperature is maintained at the optimum level for membrane performance. After the fuel is completely oxidized with externally supplied O_2, the flue gas will pass through a convective section of the boiler for further steam generation and boiler feed water preheating. The flue gas exiting the boiler is processed according to a purification process proposed for a conventional oxy-fuel technology.

A number of OTM-based power cycles have been simulated for comparison against the U.S. Department of Energy (DOE) cost of electricity (COE) targets in 2008 dollars. Table 1 illustrates OTM cases with ultra-supercritical steam cycles and a warm gas clean-up (WGCU) desulfurization system. The base case for comparison is a DOE pulverized coal (PC) air-based combustion power cycle (without CO_2 capture) using a supercritical steam cycle. The table includes data regarding the net efficiency, plant cost, and COE for three different coal prices. The COE increase over the DOE base case is calculated, and those cases meeting the DOE target of <35 percent increase in COE are highlighted in green. The high net efficiency (>36 percent higher heating value [HHV]) seen in the OTM cases is a major contributing factor leading to achievement of the COE increase target.

TABLE 1: COE COMPARISON OF A STANDARD DOE AIR-COAL POWER CYCLE WITH OTM POWER CYCLES

		Current OTM Cases			Air-PC Case
Case		1	2	3	
		Main	3 Expanders	1 POx	Praxair/DOE No CCS SC
Net Efficiency		38.2	38	37.9	39.7
Cost Basis (year)		3/2008	3/2008	3/2008	3/2008
Plant Cost ($/kW)		$3,712	$3,732	$3,706	$1,908
	Coal Price ($/MMbtu)				
Increase in COE over Reference	1.8	42.1%	42.8%	42.1%	
	3	36.4%	37.2%	36.6%	
	4	32.8%	33.6%	33.0%	

One part within Phase III of the project will focus on developing the technology to support the conversion of natural gas to syngas utilizing oxygen from a ceramic membrane in a development-scale syngas system (Figure 3). It is anticipated that this system will incorporate a second-generation OTM module that improves on the performance and cost of the proof-of-concept modules. A second part within Phase III of the project will focus on developing the technology to support the oxy-combustion of a syngas fuel utilizing oxygen from a ceramic membrane with a portion of the heat of combustion utilized to raise saturated steam and with the primary flue gas products being comprised of H_2O and CO_2. The unit will be designed to demonstrate heat transfer from the OTM modules to a process stream.

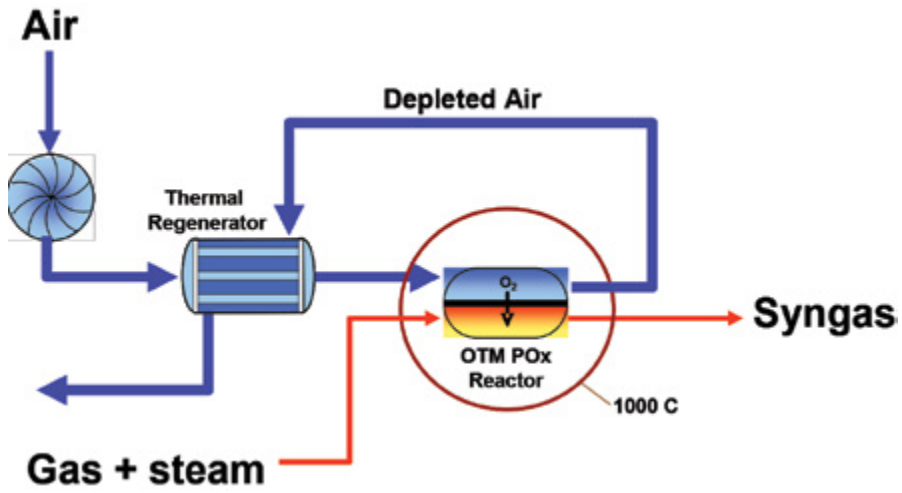

Figure 3: Phase III OTM Syngas System Concept

A third part within Phase III of the project will focus on the further development of ceramic materials and processes to support high-volume, low-cost manufacturing, as well as stable performance over an anticipated commercial operation lifetime. The main areas of focus will be on flux degradation, membrane creep life, and seal reliability.

technology advantages

- The OTM oxy-combustion system can provide a highly concentrated, sequestration-ready stream of CO_2 without costly cryogenic oxygen production or CO_2 separation processes.
- The use of reactively driven OTMs is expected to reduce the power associated with oxygen production by 70 to 80 percent. This represents a step change in the cost and related CO_2 emissions, and will enable a variety of oxy-combustion technologies, as well as other combustion applications, where CO_2 capture may be required.
- The development of OTMs will also benefit industrial processes used to produce syngas for subsequent processing into a variety of chemical and/or petrochemical end products by dramatically reducing the power requirements and capital costs to supply oxygen to the process.

R&D challenges

- Reliability and stability of the OTM tubes at high pressure and temperature.
- Achieving membrane cost and performance targets.
- Engineering design of OTM equipment, including OTM syngas reactor and boiler.

results to date/accomplishments

- Demonstrated stable OTM performance with sulfur impurities in simulated coal-derived fuel gas.
- Developed pilot plant specifications for OTM oxygen flux and fuel utilization.
- Continued OTM performance improvement through characterization and manufacture of OTM tubes, as well as preparations for scale-up.
- Demonstrated achievement of flux and performance targets with advanced OTM materials.
- Developed manufacturing protocol for pilot-sized OTM tubes.
- Completed design and construction of the OTM multi-tube reactor at the University of Utah.
- Designed a hot oxygen burner (HOB) coal gasifier to achieve required testing parameters for the OTM system. The HOB was tested at Praxair's facilities and then sent to the OTM reactor at the University of Utah for integration. Testing on coal-derived syngas has been initiated.
- Completed testing on coal-derived syngas at the University of Utah.
- Developed conceptual design of prototype OTM module and methodology for reactor integration.
- Completed a basic design and cost estimate for an OTM boiler and POx unit supporting the OTM enabled Advanced Power Cycle with Shaw Energy and Chemicals.
- Completed detailed process models of an OTM syngas unit that have been used for development of equipment specifications and a design for a 160,000-standard cubic feet per day (scfd) development system.
- Completed construction of the 160,000-scfd OTM syngas development system.
- Demonstrated conversion of natural gas to syngas with oxygen supplied through OTM with initial proof-of-concept, multi-membrane modules.

next steps

- Perform testing on the development-scale syngas system (160,000 scfd), which will validate all required startup and shut-down processes, as well as the overall performance of a fully integrated system.
- Execute design of second-generation OTM membrane and syngas module and demonstrate improvements in performance, stability, and economics.

available reports/technical papers/presentations

Christie, M., et.al, "Oxygen Transport Membrane Based OxyCombustion for CO_2 Capture from Coal Power Plants," presented at the 2010 NETL CO_2 Capture Technology Meeting, Pittsburgh, Pennsylvania, September 2010. *http://www.netl.doe.gov/publications/proceedings/10/co2capture/presentations/tuesday/Maxwell%20Christie%20-%20NT43088.pdf*.

Adams, J.; Eddings, E.; Wilson, J.; and Li, J., " Development of a Coal-fired Oxygen Transport Membrane (OTM) Combustor," presented at the 2009 American Institute for Chemical Engineers Annual Meeting, Nashville, Tennessee, November 2009. *http://netl.doe.gov/File%20Library/Research/Coal/ewr/co2/43088-Praxair-OTM-AIChE-mtg-nov09.pdf*.

Wilson, J., et.al, "Oxygen Transport Membrane Based OxyCombustion for CO_2 Capture from Coal Power Plants," Technical paper from the Proceedings of the 34th International Technical Conference on Coal Utilization & Fuel Systems, Jun 2009, *http://netl.doe.gov/File%20Library/Research/Coal/ewr/co2/43088-Praxair-OTM-paper-Clearwater-jun09.pdf*.

Christie, M.; Wilson, J.; Degenstein, N.; and Shah, M., "Oxygen Transport Membrane Based OxyCombustion for CO_2 Capture from Coal Power Plants," presented at the Annual NETL CO_2 Capture Technology for Existing Plants R&D Meeting in Pittsburgh, Pennsylvania, March 2009, *http://www.netl.doe.gov/publications/proceedings/09/CO_2/pdfs/43088%20Praxair%20oxy-combustion%20OTM%20%28Christie%29%20mar09.pdf*.

OXY-COMBUSTION TECHNOLOGY DEVELOPMENT FOR INDUSTRIAL SCALE BOILER APPLICATIONS

primary project goals

Alstom is developing and testing oxy-combustion technology for tangentially fired (T-fired) boilers in retrofit and new power plant applications.

technical goals

- Design and develop an innovative oxy-combustion firing system for existing T-fired boilers that minimizes overall capital investment and operating costs.
- Evaluate the performance of oxy-combustion T-fired boilers in pilot-scale tests at Alstom's 15-MWth Boiler Simulation Facility (BSF).
- Determine the boiler design and performance impacts for oxy-combustion.
- Evaluate and improve engineering and computational fluid dynamic (CFD) modeling tools for oxy-combustion.
- Develop the design, performance, and costs for a demonstration-scale oxy-combustion boiler and auxiliary systems.
- Develop the design and costs for both industrial and utility commercial-scale reference oxy-combustion boilers and auxiliary systems, which are optimized for overall plant performance and cost.

technical content

Initial screening studies were conducted to assess the impacts of a broad range of process variables and boiler design parameters on oxy-combustion boiler design, performance, and cost. This information was used to refine the test plan and establish design requirements for the 15-MWth testing.

technology maturity:

15-MWth Pilot-Scale Oxy-Fired Boiler

project focus:

Tangentially Fired Oxy-Combustion Boilers

participant:

Alstom Power

project number:

NT0005290

NETL project manager:

Steven Mascaro
steven.mascaro@netl.doe.gov

principal investigator:

Armand A Levasseur
Alstom Power
armand.a.levasseur
@power.alstom.com

partners:

Illinois Clean Coal Institute
North Dakota Industrial Commission
Utility Advisory Group (10 utility companies)

performance period:

9/30/08 – 4/30/14

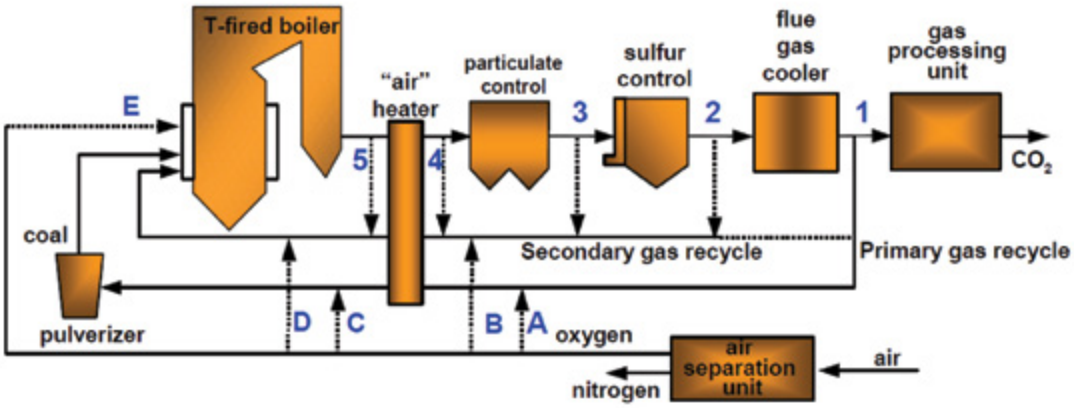

Figure 1: Simplified Oxy-Combustion Process Diagram

Figure 1 is a schematic representation of an oxy-combustion process showing the location of a T-fired boiler and several possible take-off locations for flue gas recirculation (1-5) and locations for oxygen injection (A-E). The different take-off locations will affect variables in the recirculation stream (i.e., water, particulate, and sulfur content) and impact the size of equipment.

The screening studies included evaluation of the following variables: gas recycle take-off location, gas recycle composition, gas recycle ratio, oxygen injection concentration and distribution, windbox design, and separate over-fire air design. Both process modeling and CFD analysis were applied.

CFD simulations of the BSF and an 850-MWe supercritical T-fired boiler were developed and used to evaluate various oxy-combustion design options. The BSF models were updated using boundary conditions and data from the BSF test runs to refine simulations and validate predictions.

Alstom Power has conducted a series of pilot tests in its 15-MWth BSF facility, shown in Figure 2. The BSF replicates the T-firing conditions in utility boilers. The BSF was modified for oxy-combustion operation and to provide flexibility to test over a broad range of conditions. The primary oxy-combustion test parameters evaluated include:

- Gas recycle rate and recycle sulfur capture rate.
- Distribution of gas recycle into the furnace.
- Excess oxygen.
- Oxygen injection location, distribution, and concentration.

Key aspects of boiler operation that were investigated under this project during the 15-MWth pilot testing and during design studies are shown in Figure 3.

Figure 2: Alstom 15 MWth Boiler Simulation Facility

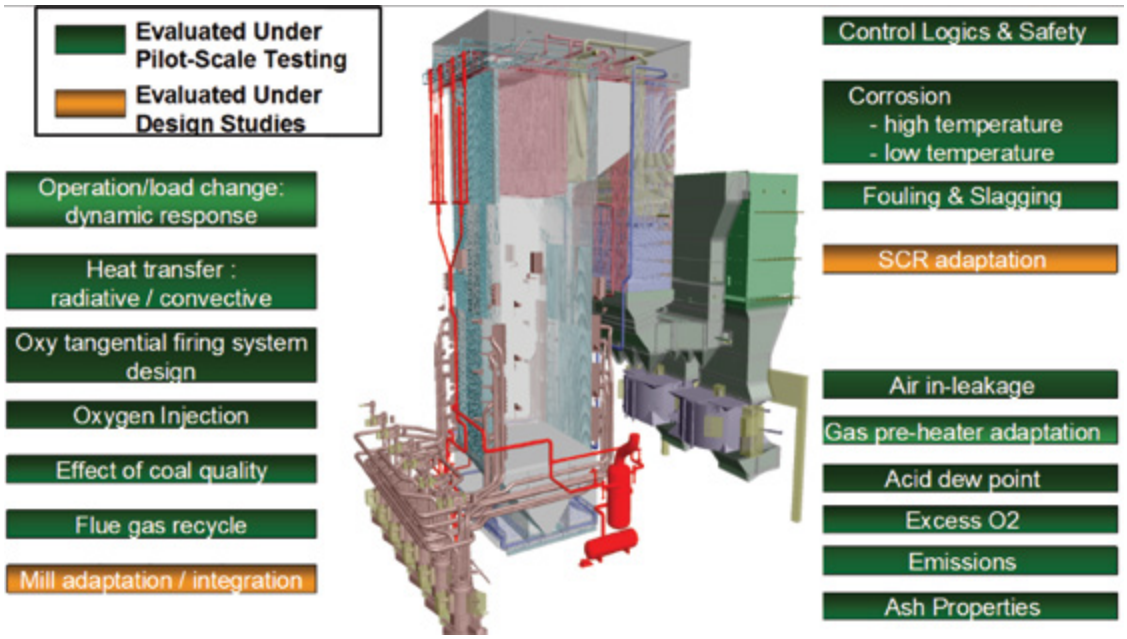

Figure 3: Aspects of Boiler Operation Requiring Assessment

The testing focused on control of furnace heat release rates and heat transfer for boiler thermal performance during oxy-combustion, while obtaining good fuel burnout and control of emissions. Measurements are conducted to assess ash deposition and fireside corrosion, as well as sulfur trioxide (SO_3) formation and behavior of trace metals such as mercury.

Detailed furnace mapping measurements were also performed to better understand behavior during oxy-combustion, as well as to provide comprehensive data sets for model refinement and validation. Furnace and convection pass temperatures were measured using suction pyrometers. Heated gas extraction probes were used with a dedicated gas analyzer system to measure in-furnace gas compositions. Incident heat fluxes to the furnace walls were measured using total heat flux probes and radiant heat fluxes measured by ellipsoidal radiometer probes. Typical measurement planes are shown in Figure 4.

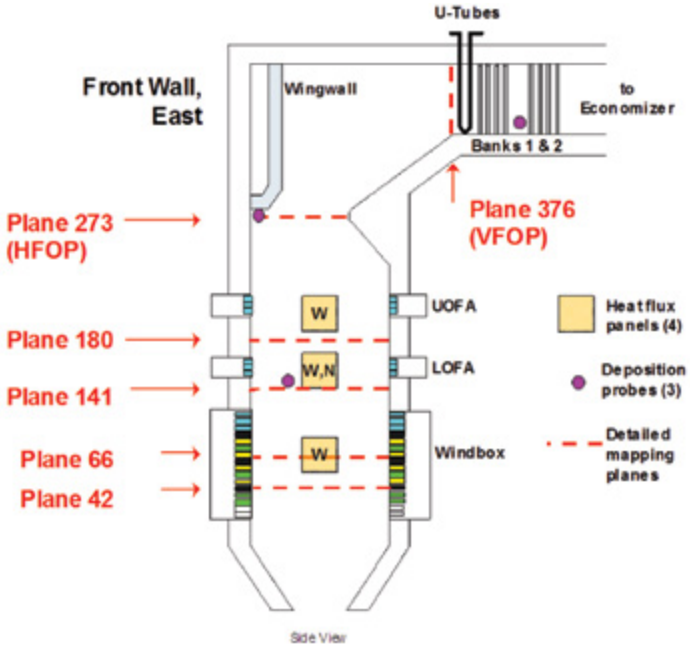

Figure 4: BSF Furnace Probe Measurement Planes

Results from the 15-MWth testing, along with the refined modeling tools (CFD and dynamic simulations), are being applied to develop a basic design for a full-scale oxy boiler, which can be rapidly applied for demonstration. This effort includes the oxy-boiler design with advanced oxy-firing system and operational controls, as well performance and cost data. Additionally, large, commercial-scale oxy-boiler reference designs are being developed for industrial and utility applications, which are integrated and optimized for overall oxy-plant performance and costs, and to provide a vision for the final commercial product.

technology advantages

Oxy-combustion is a cost-competitive, near-term solution for carbon dioxide (CO_2) capture that offers a relatively low technical risk due to use of conventional components. It can be used in new and retrofit applications, and has the potential for greater than 90 percent CO_2 capture. Oxy-combustion technology can be configured to provide a high degree of operating flexibility, which is increasingly important for electric grid stability as the portion of renewable power generation grows.

R&D challenges

- Understanding difference from air-firing in pollutant formation, ash deposition, fireside corrosion, and heat transfer rates in an oxy-combustion boiler, as well as the control of air in-leakage.
- Application of this knowledge to reduce design risks and optimize designs for performance and costs.
- Overall integration to provide commercially attractive CO_2 reduction solutions.

results to date/accomplishments

- Completed CFD and process screening evaluations.
- Completed modifications to the BSF for oxy-combustion operation to permit the firing under both air and oxygen, as well as with several flue gas recycle configurations and oxygen injection methods.
- Completed 15-MWth pilot-scale testing over a range of coal types, including sub-bituminous, low-sulfur bituminous, high-sulfur bituminous, and North Dakota lignite. Additionally, the test fuel burned at the 30-MWth Oxy-Pilot Plant at Vattenfall's Schwarze Pumpe station was also tested, providing a link to that comprehensive development program.
- These tests included both oxy- and air-firing tests, which examined the impacts of combustion and oxy-process parameters on boiler design and operation for each of the coals. Test parameters included re-circulated flue gas ratio, effect of oxygen concentration and oxygen distribution into the furnace, re-circulated flue gas take-off location, total excess oxygen, furnace combustion staging, air in-leakage rates, and reduced load operation.
- The following is a brief overview of the 15-MWth test results in some key areas examined:
  - General Oxy-Fired Operation – Stable operation over a broad range of test conditions; able to produce flue gas with greater than 90 percent CO_2 concentration (dry basis).
  - Combustion – Good performance during both air- and oxy-combustion testing for all coal types; able to operate at low-excess oxygen (less than 2 percent oxygen [O_2] at the economizer outlet), low (near-zero) carbon monoxide (CO) emissions, and low carbon in fly ash.
  - Nitrogen Oxide (NO_x) Emissions – Lower NO_x emissions with oxy-combustion than air-firing; NO_x emissions were generally more than 50 percent lower for oxy-fired than air-firing under similar staged combustion conditions.
  - Heat Transfer – Able to control furnace heat flux and temperature profiles during oxy-firing to be similar to those for air-firing.
  - SO_3 Formation – Sulfur dioxide (SO_2) to SO_3 conversion appears to be similar to air-firing; however, SO_3 concentrations could be much higher for oxy-combustion depending on recycle scheme.
  - Ash Deposition – Appeared generally similar to air-firing in terms of deposits physical characteristics and in composition.
  - Waterwall Corrosion – Appeared generally similar to air-firing.

- Successfully completed 15-MWth BSF testing to evaluate second generation oxy-boiler concepts.
  - Firing system conditions were adjusted to optimize furnace heat flux distribution (lower peak heat flux, more uniform heat flux vertically and laterally), enabling lower gas recycle rates and high furnace heat absorption while maintaining material requirements.
  - Demonstrated close-coupled gas recycle concept, which has the potential to significantly reduce equipment cost and improve efficiency.
  - Demonstrated the use of eductors to drive flue gas recycle using oxygen as the motive gas.
- Assessed the overall integration of pollutant removal from the boiler to Gas Processing Unit, and evaluated the performance of different methods of controlling mercury (Hg) and acid gases during 15-MWth testing.
- Upgraded FLUENT CFD submodels for oxy-firing and applied detailed experimental data from the 15-MWth testing to refine CFD and validate simulations.
- Developed a detailed oxy-boiler model in Aspen Dynamics and integrated this model into an overall oxy-fired CO_2 capture plant dynamic model to support development of advanced controls and assess various transient operating scenarios.
- Developed the design of a nominal 400 MWe-gross, ultra supercritical steam boiler and auxiliary equipment that could be applied for oxy-combustion demonstration projects. The design allows dual air/oxy-fired operation and applies advanced controls.
- Developed the design of a nominal 900 MWe-gross, oxy-fired ultra supercritical steam boiler and auxiliary equipment optimized for overall power plant performance (cost of electricity).

next steps

- Complete 15-MWth test data evaluation and documentation. Complete CFD model validation and uncertainty analysis for oxy-fired applications.
- Complete documentation of oxy-boiler design guidelines.
- Refine the demonstration-scale oxy-boiler design, performance and emission predictions, and costing information.
- Refine the design, performance, and costing for the large utility reference oxy-boiler and develop overall plant economics.

available reports/technical papers/presentations

Levasseur, A., "Recovery Act: Oxy-Combustion Technology Development For Industrial-Scale Boiler," presented at the 2012 NETL CO_2 Capture Technology Meeting, Pittsburgh, Pennsylvania, July 2012. *http://www.netl.doe.gov/File%20Library/Events/2012/CO2%20Capture%20Meeting/A-Levasseur-Alstom-Oxy-combustion-Industrial.pdf*.

Kluger, F.; Wild, T.; Mönckert, P.; Levasseur, A.; Turek, D.; and Kenney, J., "15 MWth and 30 MWth Oxy-Combustion Pilot Testing of Lignite from Vattenfall's Lusatia Open Cast Mine" presented at the 37th International Technical Conference on Clean Coal & Fuel Systems, Clearwater, Florida, June 2012.

Levasseur, A., et. al, "Oxy-combustion: an economic and robust clean power solution" presented at the 11th Annual Carbon Capture & Sequestration Conference, Pittsburgh, Pennsylvania, April 30 - May 3, 2012.

Levasseur, A.; Turek, D.; Kenney, J.; Edberg, C.; and Kang, S., "Oxy-Fired Tangential Boiler Development and Large-Scale (15 MWth) Validation," presented at the IEA 2nd International Oxy-Combustion Conference, Yeppoon, Queensland, Australia, September 2011.

Levasseur, A.; Darling, S.; Kluger, F.; Mönckert, P.; Heinz G.; and Prodhomme, B., "Oxy-Combustion: A Promising CCS Technology," presented at the CoalGen Conference & Exhibition, Columbus, Ohio, August 2011.

Levasseur, A., "Recovery Act: Oxy-Combustion Technology Development For Industrial-Scale Boiler," presented at the 2011 NETL CO_2 Capture Technology Meeting, Pittsburgh, Pennsylvania, August 2011. *http://www.netl.doe.gov/File%20Library/research/coal/carbon%20capture/24Aug11-Levassuer-Alstom-OxyComb-IndustScaleBoiler.pdf*.

Prodhomme, B. ; Pourchot, T. ; Heinz, G.; Mönckert, P.; Kluger, F.; and Levasseur, A., "Oxy-combustion: toward a successful CO_2 capture technology," presented at the Power Gen Europe, Milano, June 2011.

Darling, S., et.al, "Oxy-Combustion: A Sound CCS Solution Built From Pilot Operation." Power Gen International – 2010, Orlando, Florida, December 2010.

Clark, M.; Kenney, J.; Levasseur, A.; and Kang, S., "SO_3 Emissions From a Tangentially-Fired Pilot Scale Boiler Operating SO_3 Emissions From a Tangentially-Fired Pilot Scale Boiler Operating Under Oxy-Combustion Conditions," 2010 AIChE Annual Meeting, Salt Lake City, Utah, November 2010.

Levasseur, A., "Oxy-Combustion Boiler Development for Tangential Firing," presented at the 2010 NETL CO_2 Capture Technology Meeting, Pittsburgh, Pennsylvania, September 2010. *http://www.netl.doe.gov/File%20Library/Research/Coal/ewr/co2/Armand-Levasseur---NT0005290.pdf*.

Kluger, F., et.al, "Alstom's Oxy-Combustion Technology Development – Update on Pilot Plants Operation," presented at the 35th International Technical Conference on Clean Coal & Fuel Systems, Clearwater, Florida June 2010.

Levasseur, A., et.al, "Assessment of Oxy-Combustion Impacts on Boiler Design and Performance During 15 MWth Pilot-scale Testing," presented at the 9th Annual Carbon Capture & Sequestration Conference, Pittsburgh, Pennsylvania, May 2010.

Levasseur, A., et.al, "Update on Alstom's Oxy-Combustion Technology Development," presented at the 12th Annual ELECTRIC POWER Conference & Exhibition, Baltimore, Maryland, May 2010.

Levasseur, A., et.al, "Alstom's Oxy-Firing Technology Development and Demonstration-Near Term CO_2 Solutions," presented at the 34th International Technical Conference on Coal Utilization and Fuel Systems. June 2009.

Andrus, H., "Oxy-Combustion Boiler Development for Tangential Firing," presented at the Annual NETL CO_2 Capture Technology for Existing Plants R&D meeting, Pittsburgh, Pennsylvania, March 2009.

Levasseur, A.; Nsakala, N.; and Kluger, F., "Oxyfuel PC and CFB Solutions - A Promising Option for CO_2 Capture," presented at 8th Annual Conference Carbon Capture & Sequestration, Pittsburgh, Pennsylvania, May 2009.

"Oxy-Firing Technology – Pilot Testing Leading to Large-Scale Demonstration," presented at the 11th Annual Electric Power Conference, Chicago, Illinois, May 2009.

FUTURE OF CCS TECHNOLOGY ADOPTION AT EXISTING PC PLANTS

primary project goals

Argonne National Laboratory (ANL) is constructing scenarios that affect carbon capture and storage (CCS) adoption as combinations of cases for the following dimensions: electricity demand, nuclear growth, renewable energy growth, higher or lower gas price factors, and alternative policies.

technical goals

- Extension of ANL's previous work in project FWP49539, "Evaluation of CO_2 Capture/Utilization/Disposal Options."
- Simulate oxy-combustion and amine-based processes using ASPEN.
- Expand the scenario analyses to focus on the value of coal-based CCS for existing pulverized coal (PC) plants and for other technologies, such as coal-to-liquids with CCS.
- ANL will examine pathways that expedite CCS adoption, such as accelerated research and development (R&D) and carbon dioxide (CO_2) utilization for enhanced oil recovery (EOR).
- ANL will examine opportunities for R&D related to shale gas, such as developing CCS specifically for natural gas combined cycle (NGCC) units.

technical content

In a previous project (FWP49539), ANL conducted engineering assessments and economic evaluations on retrofitting PC boilers with oxy-combustion, and then eventually repowering the site with integrated gasification combined cycle (IGCC). The engineering assessment for oxy-combustion was conducted with the ASPEN process model and the economic evaluations with the AMIGA macroeconomic model. The assessment investigated the entire life cycle of the plant, which included the mining of the coal, coal transportation, coal preparation, power generation, environmental controls, water use, pipeline CO_2 conditioning, and pipeline transport of CO_2 for sequestration.

ANL also conducted ASPEN modeling for 18 different oxy-combustion and air-fired cases. Three different power production ratings (150 MW, 300 MW, and 450 MW) were investigated. The model included a selective catalytic reduction (SCR) system and a flue gas desulfurization (FGD) system for flue gas clean-up.

The analysis in the current project will demonstrate and, to the extent possible, quantify the role and benefit of R&D related to the utilization and environmental control of fossil fuels. The impacts of R&D will be shown by comparing model results such as deployment rates, emissions reductions, and electricity costs across various scenarios. The scenarios will capture a number of CO_2 control regimes, R&D programs, and economic conditions in order to fully understand the role that R&D plays in each. With widespread deployment of CCS under a CO_2 reduction target, R&D that lowers cost of CO_2 capture and increases efficiency will be shown to have a high economic payoff.

Other topics to be analyzed with the ANL model are as follows: the value of coal-based CCS in high natural gas price scenarios; opportunities and obstacles for R&D, specifically

technology maturity:

Systems Analysis and Macroeconomic Modeling

project focus:

Analysis of CCS Technology Adoption

participant:

Argonne National Laboratory

project number:

FWP49806

continued from FWP49539

NETL project manager:

José Figueroa
jose.figueroa@netl.doe.gov

principal investigator:

Donald Hanson
ANL
dhanson@anl.gov

partners:

None

performance period:

2/1/11 – 1/31/14

on NGCC with CCS, including cost and performance parameters; the conditions under which CO_2-EOR enables faster deployment of CCS systems; the market opportunity for coal and biomass to liquid fuels and power co-production with CCS; and impacts on PC units, especially those retrofitted with CCS, from cycling due to intermittent grid generation from renewables.

technology advantages

The ANL model is especially designed to analyze the issues and scenarios described above.

R&D challenges

Capturing the impacts and costs of high intermittent renewable generation as it affects dispatchable coal generators, especially those that have adopted CCS.

results to date/accomplishments

Simulated the benefit of higher utilization (i.e., capacity factor) for PC plants that retrofit CCS because of rising up the loading order (i.e., dispatch order).

next steps

- Analysis of the value of coal-based CCS in high natural gas price scenarios.
- Analysis of opportunities and obstacles for R&D, specifically on NGCC with CCS, including cost and performance parameters.
- Analysis of market opportunity for coal and biomass to liquid fuels and power co-production with CCS.
- Analyze impacts on PC units, especially those retrofitted with CCS, from cycling due to intermittent grid generation from renewable.

available reports/technical papers/presentations

Hanson, D., and Schmalzer, D., "CCS Adoption Under Alternative Market Conditions," presented at U.S. Association for Energy Economics Conference, Austin, TX, November 2012.

Hanson, D., "Economics and Adoption of CO_2 Capture for Existing PC Plants in a Power System Context," Eleventh Annual Conference on Carbon Capture, Utilization & Sequestration, Pittsburgh PA, May 2012.

Hanson, D., "Future of CCS Technology Adoption at Existing PC Plants," presented at CO_2 Capture Technology Meeting, Pittsburgh, Pennsylvania, July 2012.

Hanson, D.; Marano, J.; and Fout, T., "Economic Analysis of Existing Coal Plant Retrofits with CCS," Energy, Utility, & Environmental Conference, Phoenix AZ, January 2012.

Hanson, D., "A Market Scenario Approach to Managing Existing Power Plant Assets," 13th Annual Electric Power Conference and Exhibition, Rosemont, IL, May 2011.

Hanson, D., and Doctor, R., "Future of CCS Technology Adoption at Existing PC Plants," presented at CO_2 Capture Technology Meeting, Pittsburgh, Pennsylvania, August 2011.

"ANNUAL REPORT 2009: Evaluation of CO_2 Capture and Sequestration Using Oxyfuels with AMIGA Economic Modeling," November 23, 2009.

Doctor, R.; Hanson, D. A.; and Molburg, J. C., "Evaluation of CO_2 Capture and Sequestration Using Oxyfuels with AMIGA Economic Modeling," presented at 2009 NETL Capture Technology Meeting, March 2009.

OXY-FIRED PRESSURIZED FLUIDIZED BED COMBUSTOR DEVELOPMENT AND SCALE-UP FOR NEW AND RETROFIT COAL-FIRED POWER PLANTS

primary project goals

This project will evaluate a novel process for pressurized oxy-combustion in a fluidized bed reactor. The pressurized combustion in oxygen and the recycle of carbon dioxide (CO_2) gas eliminates the presence of nitrogen and other constituents of air, minimizing the generation of pollutants and enabling the economic capture of CO_2 gas.

technical goals

- Validate the performance of the Oxy-Pressurized Fluidized Bed Combustor (PFBC) system using standardized National Energy Technology Laboratory (NETL) tools and to identify technology gaps that need to be closed.
- The primary project goal is to validate the Oxy-PFBC technology's ability to exceed the U.S. Department of Energy (DOE)/NETL carbon capture goal of achieving greater than 90 percent CO_2 removal with no more than a 35 percent increase in cost of electricity (COE).

technical content

Phase I – Conducted risk reduction of the PFBC concept through process and economic models, bench-scale chemistry testing, and cold flow fluidized bed testing to validate heat transfer, particle models, and reaction rates.

Phase II – Validate the oxy-fired PFBC process with component development, pilot plant testing, and updated specific process performance and economic models. Improve the quality of the model predictions through targeted research testing the validity of assumptions.

Phase III – Commercialize the technology in retrofit project at a working municipal power utility.

technology maturity:

Bench-Scale

project focus:

Pressurized Fluidized Bed Combustor Development

participant:

Aerojet Rocketdyne

project number:

FE0009448

NETL project manager:

Bruce Lani
bruce.lani@netl.doe.gov

principal investigator:

Mark Fitzsimmons
Aerojet Rocketdyne
mark.fitzsimmons@pwr.utc.com

partners:

Linde LLC
Electric Power Research Institute - EPRI
Pennsylvania State University
Jamestown Board of Public Utilities

performance period:

10/1/12 – 9/30/13

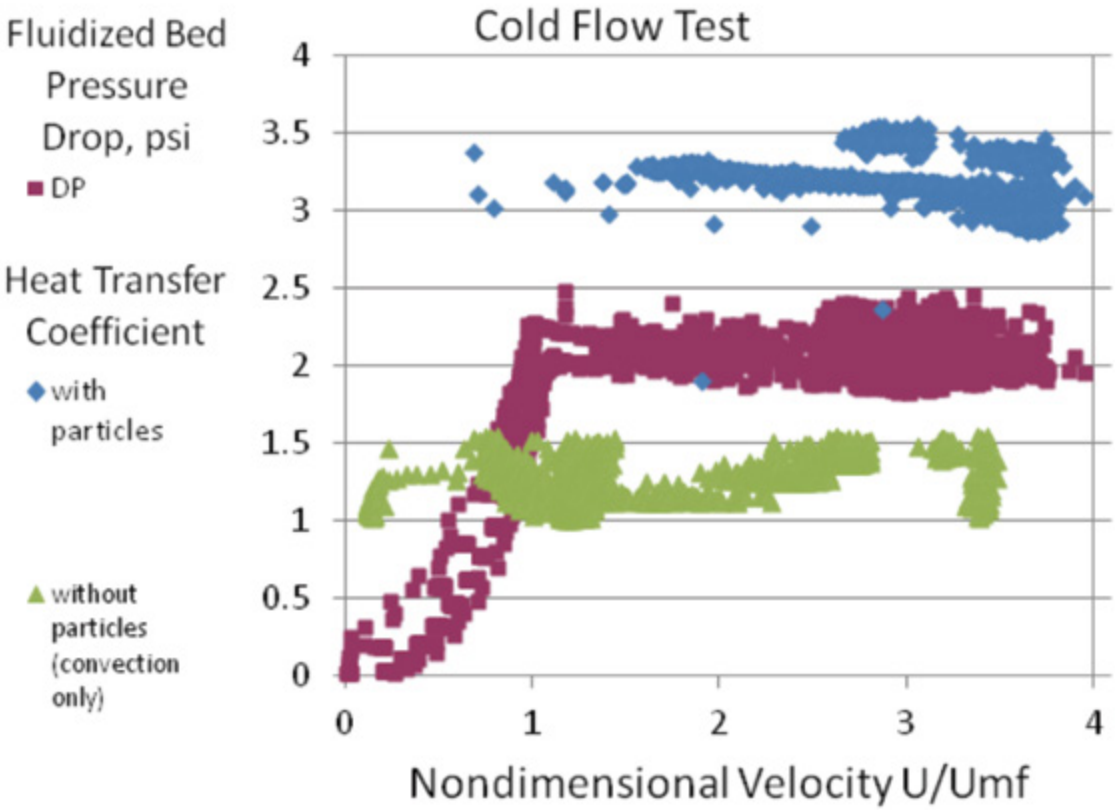

Figure 1: Cold Flow Test

Cold flow tests have demonstrated predictable (flat) behavior over a very wide range of flow rates. Historically, fluidized bed combustors also demonstrate constant temperatures throughout the bed, and these tests are also confirming this result, even in a situation where one might predict thermal transients due to uneven heat input across one or more dimensions of the bed.

Particle residence times have been measured on the order of minutes, validating the prediction that the high aspect ratio pressurized fluidized bed under development will combine the best features of a circulating fluidized bed (high carbon utilization) and a bubbling fluidized bed (low velocities), and put it all in a smaller package than either of these atmospheric pressure devices

technology advantages

- Production of electricity from coal with near-zero emissions.
- Captured CO_2 may be utilized for enhanced oil recovery or sequestered.

R&D challenges

- Prediction of particle temperatures.
- Identification of common assumptions for equipment that may be re-used versus equipment that must be new for the proposed PFBC technology.

results to date/accomplishments

- Bench-scale chemistry (kinetics) testing of sulfation at pressurized oxy-combustion conditions.
- Cold flow testing of full-scale tubes and particles in fluidized beds with similar non-dimensional parameters has validated heat transfer coefficients and correlations for predicting in the pressurized fluidized bed.
- Particle elutriation rates and residence times measured in cold flow.
- Bed stability tests in cold flow validate the method of bubble control.
- Particle model that balances fluidization, heat release, and steam production combined into a finite difference model using the method of characteristics to compute fluidized bed design fitness.
- Cost performance validated with revised and higher fidelity process and economic model.
- Cost and performance model tied to detailed design parameters in integrated system optimization architecture to trace component design changes and how they cascade through the system to alter COE, fluidization, thermals, carbon utilization, and other top-level constraints.

next steps

- Combine kinetics, fluidization, and heat removal in pilot test to validate integrated combustion and steam production analyses.
- Develop and anchor particle models with test data for inclusion in computational fluid dynamic simulations.
- Scale-up technology to the demonstration plant-scale for an existing retrofit plant.

available reports/technical papers/presentations

N/A.

HIGH EFFICIENCY MOLTEN-BED OXY-COAL COMBUSTION WITH LOW FLUE GAS RECIRCULATION

technology maturity:

Bench-Scale

project focus:

High Efficiency Molten-Bed Oxy-Combustion

participant:

Gas Technology Institute (GTI)

project number:

FE0009686

NETL project manager:

Steven Mascaro
steven.mascaro@netl.doe.gov

principal investigator:

David Rue
Gas Technology Institute
david.rue@gastechnology.org

partners:

Nexant
Brigham Young University (BYU)
Reaction Engineering International (REI)

performance period:

10/1/12 – 9/30/13

primary project goals

Gas Technology Institute (GTI) is developing a novel pressurized, oxy-coal combustion process to enable efficient carbon capture from coal-fired power plants. The project objective is to assess the performance and cost of a fully integrated GTI pressurized oxy-combustion supercritical pulverized coal (SCPC) power plant with carbon dioxide (CO_2) recovery, burning Illinois #6 bituminous coal, for comparison to a reference 550-MW air-fired atmospheric SCPC power plant without CO_2 recovery.

technical goals

- Complete engineering design and economic analysis of a pressurized molten-bed oxy-coal boiler.
- Complete thermodynamic energy and exergy analyses, oxy-coal burner testing, and corrosion assessment.

technical content

The molten-bed combustor concept is derived from proven GTI engineering of a submerged combustion melting process. It is designed to maximize efficiency and minimize the cost of pressurized oxy-combustion by greatly reducing flue gas recirculation (FGR) while operating at elevated pressure. The unique combustion and heat transfer design employs a smaller and less expensive combustor and reduced gas-phase heat exchanger surface area. Decreasing the amount of FGR by up to 90 percent reduces capital cost and requires less maintenance.

A small amount of flue gas is used for coal crushing and transportation to the burners. Exhaust gas handling and cleaning equipment will be reduced in size and cost. Cost savings are also realized from ash recovery as frit rather than micron-sized fines, which can be difficult to handle, and the potential exists to capture a large portion of the sulfur and mercury in stable forms in the molten slag.

The design pulverized coal power plant in this study is a pressurized, oxy-combustion supercritical steam-electric generating power plant with 90 percent carbon capture and generating a nominal 550 MWe. The Combustion Block contains the following major systems that are directly associated with pressurized oxy-combustion of coal:

- Pulverized Coal Pressurized Storage and Transport/Feed System.
- Pressurized Submerged Combustion Molten-Bed Furnace/Boiler.
- Pressurized Convective Superheater, Reheater, Economizer, and Condenser.
- CO_2-Rich Flue Gas Treating and Conditioning Facilities.
- Product CO_2 Recovery, Purification, and Compression Facilities.

In Phase I of this project, work will be focused on technical and economic analysis of a pressurized oxy-combustion power plant design based on the molten-bed combustor and following National Energy Technology Laboratory (NETL) protocols with comparisons to a

baseline supercritical steam power plant burning Illinois #6 bituminous coal.

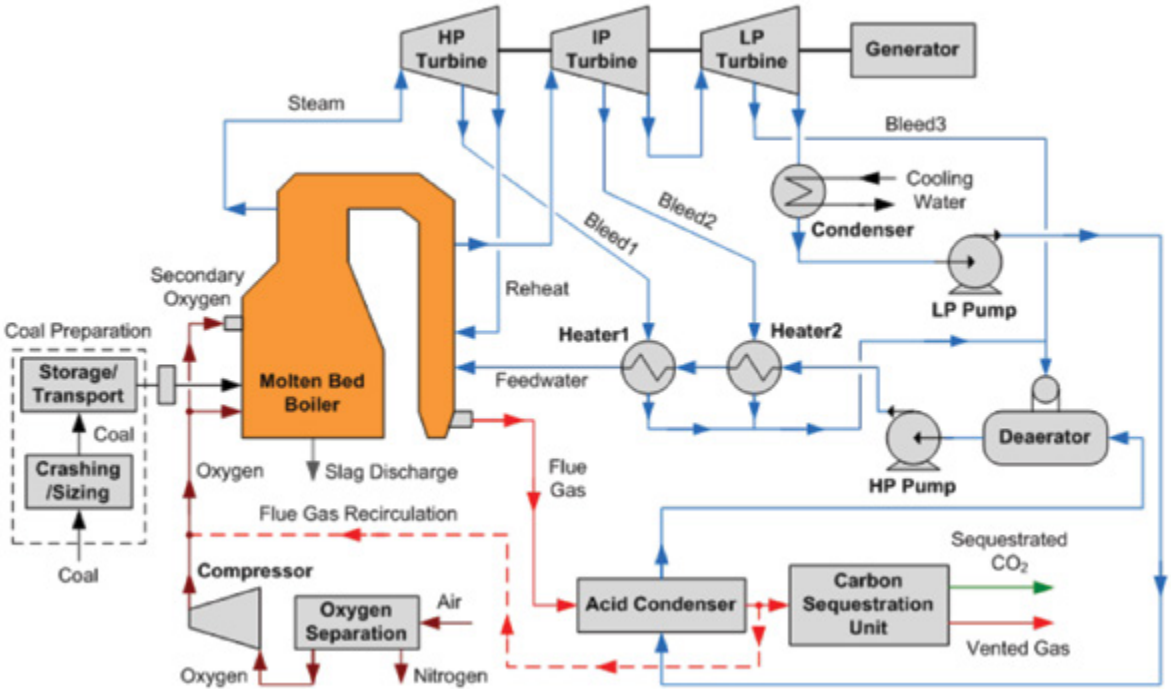

Figure 1: Schematic Molten Bed Boiler

technology advantages

- Boiler is fuel-flexible with no modification, using coal and natural gas.
- Higher efficiency than other known oxy-coal combustors by greatly reducing the FGR and by operating at elevated pressure.
- Smaller, less expensive combustor and reduced gas phase heat exchanger surface area.

R&D challenges

- Chance of elutriation of slag into the convective pass.

results to date/accomplishments

- Completion of basic engineering design with ASPEN Plus process model.
- Completion of techno-economic study design basis and methodology report.

next steps

- Oxy-coal burner testing and thermodynamic analysis.
- Corrosion testing and set-up for preliminary computational fluid dynamic model.

available reports/technical papers/presentations

Kickoff meeting presentation, "High Efficiency Molten-bed Oxy-Coal Combustion with Low Flue Gas Recirculation," Pittsburgh, Pennsylvania, October 2012. *http://www.netl.doe.gov/File%20Library/Research/Coal/ewr/co2/gti-kick-off.pdf*.

CHARACTERIZATION OF OXY-COMBUSTION IMPACTS IN EXISTING COAL-FIRED BOILERS

primary project goals

Reaction Engineering International (REI) is developing mechanistic descriptions and analytical tools to characterize and predict impacts of carbon dioxide (CO_2) flue gas recycle (FGR) and burner feed design on flame characteristics, fouling, slagging, and corrosion, inherent in the retrofit of existing coal-fired boilers for oxy-combustion. Investigations include laboratory-, bench-, and pilot-scale tests, as well as computer simulations of pilot-scale and full-scale systems.

technical goals

- Utilize multi-scale testing and theory to develop:
  - Fundamental data that describe flame characteristics, corrosion rates, and ash properties during oxy-combustion coal firing.
  - Validated mechanisms that describe oxy-combustion processes.
  - Firing system principles that guide oxy-burner design and FGR properties.
- Incorporate validated mechanisms into a computational fluid dynamics (CFD) model to evaluate full-scale oxy-combustion retrofit designs:
  - Predict flame characteristics and surface impacts for different full-scale oxy-firing designs and FGR properties.

technical content

REI is characterizing and predicting the performance and operational impacts of oxy-combustion retrofit designs on existing coal-fired boilers. The project focus is to develop tools to characterize and predict impacts of FGR and burner feed design on flame characteristics (burnout, nitrogen oxide [NO_x], sulfur oxide [SO_x] and fine particle emissions, heat transfer), fouling, slagging, and corrosion. Testing includes production of multi-scale experimental data focused on burner design, char oxidation, soot evolution, ash characterization and deposition, and corrosion. Mechanisms capable of describing these phenomena under air- and oxy-combustion conditions are being developed and validated using the data generated during experimentation and from the literature. The mechanisms are being implemented into a CFD code and an existing coal-fired utility boiler is modeled under air- and oxy-combustion conditions to identify the likely impacts of retrofit.

This project is tailored to both identify potential impacts of the oxy-combustion retrofit of existing coal-fired utility boilers (through multi-scale experiments) and to develop tools that allow accurate prediction of these impacts (through mechanism development). Experiments are performed on three different scales: (1) a bench-scale optical entrained flow reactor is used to elucidate the impact of oxy-combustion flue gas composition on the rate of char oxidation; (2) a 100-kW lab-scale combustor is used to characterize the effects of FGR on ash characteristics; and (3) a 1.2-MW pilot-scale combustor is used to investigate burner and firing system principles, deposition, corrosion, and radiative heat transfer, including soot evolution. The data from these experiments are used to guide development of mechanisms that may be used to describe char oxidation, deposition (slagging and fouling), corro-

technology maturity:

Laboratory-, Bench-, and Pilot-Scale; Simulated and Actual Flue Gas; 0.3-8 Tonnes of CO_2 Per Day

project focus:

Characterization of Oxy-Combustion Impacts

participant:

Reaction Engineering International

project number:

NT0005288

NETL project manager:

Andrew Jones
andrew.jones@netl.doe.gov

principal investigator:

Bradley R Adams
Reaction Engineering International
adams@reaction-eng.com

partners:

Brigham Young University
Corrosion Management LTD
PacifiCorp
Praxair, Inc.
Siemens Energy
University of Utah
Vattenfall AB

performance period:

10/1/08 – 9/30/13

sion, and soot evolution. The data generated are used to produce an overview of firing system principles for oxy-combustion that should help guide design of full-scale firing systems.

Bench-Scale Optical Entrained Flow Reactor Experiments

Bench-scale experimentation is conducted at Sandia National Laboratories to further clarify the behavior of char in an oxygen (O_2)-enriched FGR gas matrix. These experiments are conducted in Sandia's optical entrained flow reactor and associated particle-sizing pyrometry diagnostics.

100 kW Oxy-Fuel Combustor (OFC) Experiments

Data related to ash characterization and deposition are collected using experiments conducted in the University of Utah's 100-kW Oxy-Fuel Combustor (OFC), shown in Figure 1. The furnace consists of an OFC chamber and radiant zone in the vertical section, followed by a horizontal convective section where temperature profile is prescribed through adjustment of independently controlled cooling coils to simulate practical furnace temperature profiles.

These air- and oxy-fired experiments focus primarily on effects of FGR on ash chemistry, under practical time/temperature/particle composition conditions. Multiple modes of gas recycle are tested to investigate FGR conditions ranging from hot, moist, and particle-laden gases to clean CO_2. This information provides insight into how slagging and fouling could be impacted under oxy-firing conditions. Measurements include sampling of ash aerosol using low-pressure impactors and isokinetic dilution probes. In addition, mobility particle sizers determine ultrafine (sub-micron) particle concentrations and particle size distributions, and energy-dispersive X-ray spectroscopy (EDS) and computer-controlled scanning electron microscopy (CCSEM) techniques are used to identify ash compositions.

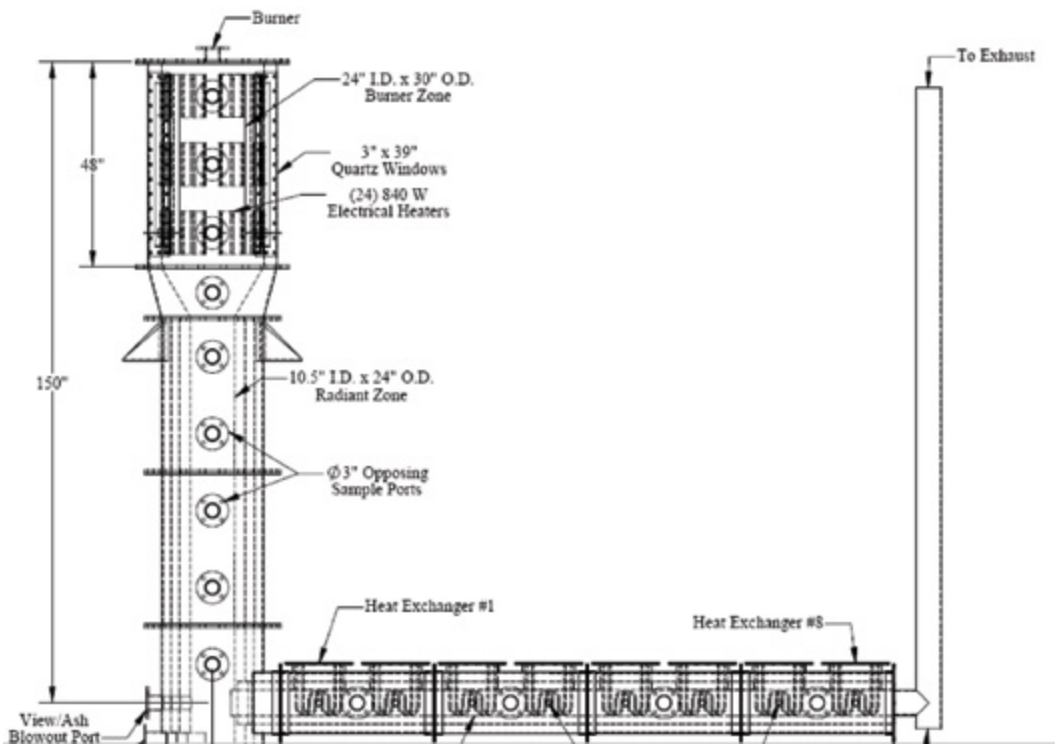

Figure 1: Diagram of 100-kW Oxy-Fuel Combustor

Figure 2: Pilot-Scale Combustion Facility (L1500)

1.2 MW Pilot-Scale Furnace (L1500) Experiments

Pilot-scale experiments are performed in a 1.2-MW pulverized coal furnace (L1500). These experiments are designed to investigate firing system configuration impact on flame stability and heat transfer, soot evolution and water wall, and superheat material corrosion. A picture of the L1500 is shown in Figure 2. Four weeks of parametric testing were performed in the L1500 to develop practical guidelines that allow optimized operation of an actual burner under oxy-combustion conditions with FGR. Burner operating parameters of interest include:

1. Variable O_2, FGR, and coal distribution in the burner.
2. Variable FGR ratios that produce 27 and 32% O_2 in the O_2/FGR mixture.
3. Variable burner stoichiometric ratio within the range of 0.8 to 1.2.
4. Targeted O_2 injection.
5. Furnace staging of FGR independent of burner conditions.

Six weeks of testing were performed in the L1500 to characterize corrosion under both air- and oxy-combustion conditions. Results from previous experiments were used to identify regions in the furnace for installation of the corrosion probes where deposition, heat flux, and flue gas compositions are favorable for corrosion and relevant for full-scale utility boilers. The parameters of interest in the corrosion test include:

1. Air- and oxy-fired conditions.
2. Powder River Basin (PRB) and bituminous coals.
3. Optimized O_2, FGR, and coal distribution in the burner, from previous experiments.
4. Variable flue gas recirculation ratio, within the limits from previous experiments.
5. Variable burner stoichiometric ratio, within the limits from previous experiments.

Measurements performed in the pilot-scale furnace include:

1. Flue gas composition (O_2, CO_2, carbon monoxide [CO], NO_x, mercury [Hg], and sulfur dioxide [SO_2]) using existing measurement equipment.
2. Unburned carbon in ash, using loss on ignition (LOI) analysis.
3. Flame attachment, using ultraviolet sensors and cameras.
4. Real-time corrosion measurements.

5. Deposition rate and composition at the corrosion locations.
6. Heat flux at the corrosion locations and other locations in the furnace.
7. Local flue gas temperatures, using suction pyrometry.
8. Soot volume fraction using the two-color extinction method.

Follow-on testing was performed to characterize performance of mercury control technologies under air- and oxy-firing conditions. Bromine corrosion impacts were also measured.

technology advantages

- Enable the development of validated combustion mechanisms specifically designed for oxy-combustion with FGR for retrofitting existing coal-fired boilers.
- Identify firing system principles that guide oxy-burner design and potential retrofit strategies.
- Quantify impacts of FGR properties on ash deposition.
- Quantify impacts of oxy-combustion firing on corrosion of typical boiler waterwall and superheat materials.
- Develop the capability to assess the performance and optimize the retrofit of oxy-combustion to a full-scale existing boiler to minimize retrofit cost and maximize operability.

R&D challenges

- Ability to control and quantify how much air-in leakage occurs inside the OFC and L1500 furnace during the experiments.
- Development and operation of a coal-fired research burner specifically designed to span a range of coal/O_2/FGR injection strategies and operating conditions.
- Correlation of experimental data with mechanisms and model predictions in order to provide adequate mechanism/model validation.

results to date/accomplishments

- Parametric burner test completed.
- Burner primary retrofit results:
  - Matching burner primary gas/fuel ratio or momentum ratio with air-fired operation produced a stable attached flame (good retrofit strategies).
  - Matching primary velocity with air-fired operation did not provide a stable attached flame (may depend on burner flexibility).
  - There is a fundamental difference in devolatilization rates and ignition between air and oxygen/FGR firing.
  - A stable flame can be achieved with no oxygen enrichment in the primary.
- Oxygen injection results:
  - Targeted oxygen injection at the burner primary-inner secondary boundary produced the most effective flame stabilization and ignition. Axial injection produced a permanently detached flame and radial injection produced a wider flame, but did not improve flame attachment.
  - Axial injection in the primary produced a more intensely radiating flame downstream of burner; secondary injection produced a less intense flame near the burner.
  - For maximum pre-mixed primary O_2, adding small amounts of oxygen enrichment radially through the bluff body did not improve flame attachment.
- Soot volume fraction ≈40 percent lower for oxy-combustion cases than air-fired cases for the Utah coal, and 10 to 20 percent lower for PRB coal.
- NO_x emissions were up to 75 percent lower with oxy-combustion, depending on level of staging.

- Corrosion testing results:
  - Waterwall (SA210) corrosion rates decreased when converting from air- to oxy-firing for all coals.
  - Superheater (T22, P91, and 347H) rates generally increased when converting from air- to oxy-firing.
  - 347H corrosion rates increased dramatically for $SO_2 > \approx 3{,}000$ parts per million (ppm) and Tprobe $< \approx 1{,}150°F$.
  - Corrosion for lower alloyed materials (T22, SA210) increased when changing between oxidizing-reducing. Likely to contribute to in-plant corrosion in near-burner and near-overfire air (OFA) port regions. Transient effects cannot be resolved using coupon tests.
- Mercury testing results:
  - Native mercury removal was higher for both OFC and L1500 cases.
  - Similar speciation for air- and oxy-firing; slightly lower total gas mercury under oxy conditions.
- Aerosol/Fine ash testing results:
  - LOI or carbon in the ash is nearly always reduced under oxy-fired conditions of 27 to 32 percent O_2 as a result of increased oxygen and residence time to facilitate greater char oxidation when compared to air-fired combustion.
  - Black carbon or soot is also nearly always reduced when switching from air- to oxy-fired conditions in the 27 to 32 percent O_2 range.
  - Overall particle size distributions for a given coal are not fundamentally different between air- and oxy-fired conditions of similar temperatures (i.e., 27 to 32 percent O_2 range).
  - Black carbon or soot is a significant contributor to the ultrafine particle mode.
  - Particle size distributions are affected by stoichiometric ratio due to differences in soot and sulfate production.
  - Differences between air- and oxy-fired partitioning of elements in the ash are subtle and do not indicate the need for fundamental changes in aerosol handling or potential aerosol toxicity.
  - Coal rank and chemistry dominates the partitioning of ash particles and elements and combustion atmosphere has a comparatively limited mechanistic influence.
  - No aerosol data were discovered across a wide range of coal compositions and oxy-fired combustion conditions that would indicate a significant problem or hurdle for retrofitting an existing boiler with oxy-fired technology.
- Retrofit modeling results (PacifiCorp Hunter Unit 3):
  - REI's Glacier combustion simulation (CFD) tool was used to simulate air- and oxy-firing in Hunter Unit 3, based on an oxy-retrofit design by Siemens. Modeling included improved char oxidation, soot, slagging, and corrosion models.
  - The new, enhanced char oxidation sub-model predicted reasonable unburned carbon (UBC) concentrations (3.8 percent for air-firing compared with the 2 to 3 percent UBC observed at the Hunter plant) and decreased UBC for oxy-combustion firing. This decrease in UBC level from air- to oxy-firing was consistent with test results from the L1500 pilot-scale tests.
  - A 26 percent O_2 mixture of oxygen and flue gas recycle was able to match the air-fired case heat transfer fairly well. For the 26 percent O_2 condition, unburned carbon was lower in the oxy-fired case (2.1 percent versus 3.6 percent in the air-fired case). Total corrosion potential was also higher for all surfaces in the oxy-fired case. However, peak corrosion was lower for the waterwalls in the oxy-fired case and higher for the other surfaces. These modeling results suggest that selection of flue gas composition with a 26 percent O_2 mixture of O_2 and flue gas recycle can reasonably match heat transfer in an existing coal boiler and that there are not any catastrophic differences in an oxy-fired system compared to air-firing.

next steps

- Complete pilot-scale mercury testing.
- Complete pilot-scale corrosion testing (to study bromine-based corrosion).
- Complete boiler mercury case study.

Fry, A.; Adams, B.; and Fout, T., "Carbon, Sulfur and Nitrogen Behavior during Pilot-Scale Testing of Oxy-Coal Combustion," Paper #49, Power Plant Air Pollutant Control "MEGA" Symposium, Baltimore, MD, August 2012.

Fry, A.; Adams, B.; Davis, K.; Swensen, D.; and Cox, W., "Fire-Side Corrosion of Heat Transfer Surface Materials with Air- and Oxy-coal Combustion," Paper #51, Power Plant Air Pollutant Control "MEGA" Symposium, Baltimore, MD, August 2012.

Fry, A., et.al, "Fireside Corrosion of Heat Transfer Surface Materials for Air- and Oxy-coal Combustion," presented at the IEA 2nd Oxyfuel Combustion Conference, Yeppoon, Australia, September 2011.

Fry, A., and Adams, B., "Assessment of Full-scale Boiler Oxy-combustion Retrofit Using CFD Modeling," presented at the IEA 2nd Oxyfuel Combustion Conference, Yeppoon, Australia, September 2011.

Fry, A., and Adams, B., "Oxy-burner Retrofit Principles for Existing Coal-fired Utility Boilers," Poster at IEA 2nd Oxyfuel Combustion Conference, Yeppoon, Australia, September 2011.

Eddings, E.; Ahn, J.; Wang, L.; Okerlund, R.; and Fry, A., "Transformations of Fuel Sulfur During Oxy-Coal Combustion," presented at the IEA 2nd Oxyfuel Combustion Conference, Yeppoon, Australia, September 2011.

Adams, B., and Fry, A., "Characterization of Oxy-combustion Impacts in Existing Coal-fired Boilers," presented at the 2011 NETL CO_2 Capture Technology Meeting, Pittsburgh, Pennsylvania, August 2011.

Fry, A., et.al, "Fire-Side Corrosion of Heat Transfer Surface Materials for Air- and Oxy-coal Combustion," presented at The 36th International Technical Conference on Clean Coal & Fuel Systems (Clearwater Clean Coal Conference), Clearwater, Florida, June 2011.

Fry, A.; Van Otten, B.; Adams, B.; and Bool, L., "Mercury Speciation and Emission from Pilot-scale PC Furnaces under Air- and Oxy-fired Conditions," presented at The 36th International Technical Conference on Clean Coal & Fuel Systems (Clearwater Clean Coal Conference), Clearwater, Florida, June 2011.

Adams, B.; Fry, A.; Shig-Shim, H.; and Van Otten, B.,"CFD Modeling of Pilot-Scale Oxy-combustion Experiments," presented at The 36th International Technical Conference on Clean Coal & Fuel Systems (Clearwater Clean Coal Conference), Clearwater, Florida, June 2011.

Geier, M.; Shaddix, C.; Davis, K.; and Shig-Shim, H., "On the Use of Single-Film Models to Describe the Oxy-fuel Combustion of Pulverized Coal Char," presented at The 36th International Technical Conference on Clean Coal & Fuel Systems (Clearwater Clean Coal Conference), Clearwater, Florida, June 2011.

Eddings, E.G.; Ahn, J.; Wang, L.; Okerlund, R.; and Fry, A., "Transformations of Fuel Sulfur During Oxy-Coal Combustion," presented at The 36th International Technical Conference on Clean Coal & Fuel Systems (Clearwater Clean Coal Conference), Clearwater, Florida, June 2011.

Fry, A., et.al, "Fire-Side Corrosion Rates of Heat Transfer Surface Materials for Air- and Oxy-coal Combustion," IEAGHG Special Workshop on SO_2/SO_3/Hg and Corrosion Issue During Oxyfuel Combustion, London, U.K., January 2011.

Fry, A.; Van Otten, B.; Adams, B. and Bool, L., "Mercury Speciation and Emission from Pilot-scale PC Furnaces under Air- and Oxy-fired Conditions," IEAGHG Special Workshop on SO_2/SO_3/Hg and Corrosion Issue During Oxyfuel Combustion, London, U.K., January 25-26, 2011.

Adams, B.; Fry, A.; and Paschedag, A., "Impacts of Oxy-combustion Retrofit for Coal-fired Boilers," 2011 Reinhold NO_x-Combustion Conference, Chicago, Illinois, February 2011.

Geier, M., and Shaddix, C.R., "A Modified Single-Film Char Consumption Model for CFD Simulations of Oxy-Combustion of Pulverized Coal," presented at 7th US National Combustion Meeting, Georgia Institute of Technology, Atlanta, Georgia, March 2011.

Shan, J., and Fry, A., "Oxy-coal Burner Design for Utility Boilers," Chapter 7 in Oxy-fuel combustion for power generation and carbon dioxide (CO_2) capture, Ed. Ligang Zheng, Woodhead Publishing, Oxford, U.K., 2011.

Fry, A.; Adams, B.; Swensen, D.; and Cox, W., "Potential Impacts of Oxy-Combustion Retrofit On Boiler Tube Corrosion Rate," presented at AIChE Annual Meeting, Salt Lake City, Utah, November 2010.

Yu, D.; Morris, W.; Erickson, R.; Wendt, J.O.L.; Fry, A.; and Senior, C., "Ash Formation and Deposition During Oxy-Coal Combustion," presented at AIChE Annual Meeting, Salt Lake City, Utah, November 2010.

Geier, M.; Shaddix, C. R.; and Haynes, B. S., "Oxy-Combustion of Pulverized Coal: Modeling of Char- Combustion Kinetics," presented at the 27th Annual International Pittsburgh Coal Conference, Istanbul, Turkey October 2010.

Fry, A.; Adams, B.; Davis, K.; Cremer, M.; Swensen, D.; Munson, S.; Kazalski, P.; Cox, W.; Oryshchyn, D.; and Gerdemann, S., "Topics in Oxy-Coal Retrofit of Utility Boilers Burner Principles and Fire-Side Corrosion," The MEGA Symposium, Aug. 30 – Sept. 2 2010, Baltimore, Maryland.

Adams, B., and Fry, A., "Characterization of Oxy-combustion Impacts in Existing Coal-fired Boilers," presented at the 2010 NETL CO_2 Capture Technology Meeting, Pittsburgh, Pennsylvania, September 2010. *http://www.netl.doe.gov/publications/proceedings/10/co2capture/presentations/tuesday/Bradley%20Adams-NT0005288.pdf*.

Fry, A.; Adams, B.; Cremer, M.; and Shan, J., "Development of Oxy-Burner Retrofit Principles for Existing Coal-Fired Utility Boilers," presented at the IEA 1st International Oxy-Fuel Combustion Conference, Cottbus, Germany, September 2009.

Adams, B.; Fry, A.; Senior, C.; and Wang, D., "Oxy-combustion Impacts on Coal Ash Slagging and Fouling," presented at the IEA 1st International Oxy-Fuel Combustion Conference, Cottbus, Germany, September 2009.

Fry, A., and Adams, B., "Characterization and Prediction of Oxy-combustion Impacts in Existing Coal-fired Boilers," presented at the 34th International Technical Conference on Clean Coal & Fuel Systems, Clearwater, Florida, June 2009.

Adams, B., and Fry, A., "Characterization of Oxy-Combustion Impacts in Existing Coal-Fired Boilers," presented at the Annual NETL CO_2 Capture Technology for Existing Plants R&D Meeting, Pittsburgh, Pennsylvania, March 2009. *http://www.netl.doe.gov/publications/proceedings/09/CO$_2$/pdfs/5288%20REI%20oxy-combustion%20%28Adams%29%20mar09.pdf*.

NOVEL SUPERCRITICAL CARBON DIOXIDE POWER CYCLE UTILIZING PRESSURIZED OXY-COMBUSTION IN CONJUNCTION WITH CRYOGENIC COMPRESSION

primary project goals

Southwest Research Institute will demonstrate a novel supercritical carbon dioxide (CO_2) power cycle utilizing pressurized oxy-combustion through system process and economic modeling to evaluate overall plant performance and economic cost.

technical goals

- Achieve high overall plant efficiencies with 90 percent CO_2 capture and compression to 2,200 pounds per square inch (psi).
- Identify a favorable pressurized supercritical CO_2 cycle configuration from several candidate cycles.
- Identify critical enabling technologies that require further development to realize the supercritical oxy-combustion power cycle.

technical content

Conventional oxy-combustion with carbon capture includes two sub-systems that require significant power consumption that have a significant impact on overall plant efficiencies: the power required to generate O_2 through cryogenic air separation prior to combustion, and the power required to compress the captured CO_2 to pipeline pressures. Supercritical oxy-combustion addresses these two areas by combusting coal in a supercritical oxy-combustor where the recycled CO_2 is above the critical pressure and is in the dense phase region.

It is anticipated that the supercritical oxy-combustor will achieve high combustion efficiencies, decreasing fuel and oxygen consumption for a fixed power output, and will require less power for CO_2 compression because the captured CO_2 is already in the dense phase region where pumping can be used to reach pipeline pressure as opposed to gaseous phase compression.

technology maturity:
Bench-Scale

project focus:
Supercritical CO_2 Power Cycle

participant:
Southwest Research Institute

project number:
FE0009395

NETL project manager:
Bruce Lani
bruce.lani@netl.doe.gov

principal investigator:
Klaus Brun
Southwest Research Institute
klaus.brun@swri.org

partners:
Thar Energy LLC

performance period:
10/1/12 – 9/30/13

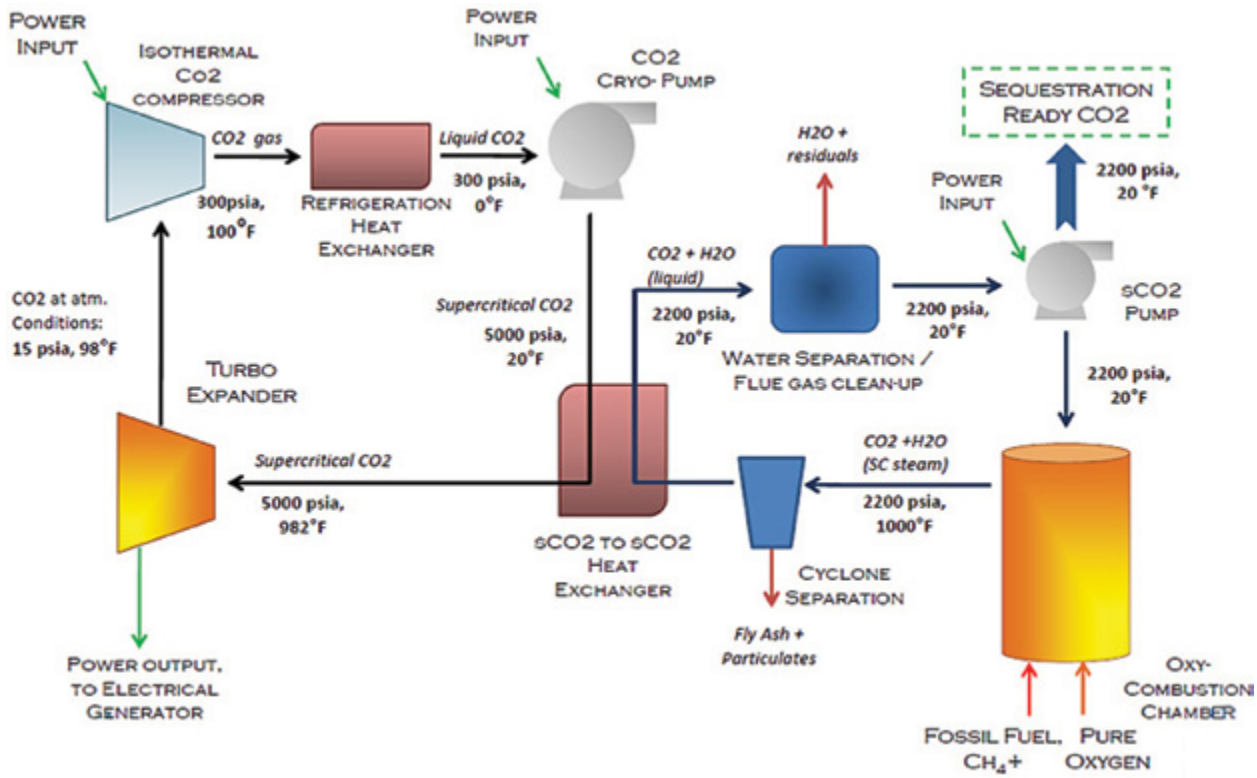

Figure 1: Dual Loop Cryogenic Pressurized Oxy-Combustion Cycle Concept

technology advantages

- High plant efficiencies with inherent CO_2 capture.
- Increased combustion efficiencies.
- Reduced power consumption for CO_2 compression.
- Reduced plant footprint due to compact cycle components and turbomachinery.

R&D challenges

- Limited data for coal combustion at supercritical CO_2 pressures.
- CO_2 turbomachinery still in development.
- Flue gas cleanup must be performed at pressure.

results to date/accomplishments

- Evaluation of candidate cycles and selection of an indirect-fired supercritical CO_2 recompression cycle with a supercritical oxy-combustion loop.
- Optimization of the recompression supercritical CO_2 cycle to achieve high cycle efficiencies and the supercritical combustion loop to minimize thermal and power losses.
- Laboratory testing of coal combustion properties in supercritical CO_2.
- Development of a novel supercritical oxy-combustor.

next steps

- Demonstrate and document the performance of the supercritical oxy-combustor.
- Evaluate the impact of particle loading on heat exchanger performance.
- Identify materials enabling temperatures above 650°C to take advantage of the increase in supercritical CO_2 closed Brayton cycle efficiencies with increasing temperature.

available reports/technical papers/presentations

Brun, K., "Novel Supercritical Carbon Dioxide Power Cycle Utilizing Pressurized Oxy-Combustion in Conjunction with Cryogenic Compression," Kickoff presentation, Pittsburgh, Pennsylvania, October 2012. *http://www.netl.doe.gov/File%20Library/Research/Coal/ewr/co2/DE-FE0009395-swri-Kickoff.pdf*.

OPTIMIZATION OF PRESSURIZED OXY-COMBUSTION WITH FLAMELESS REACTOR

technology maturity:

Bench-Scale

project focus:

Pressurized Oxy-Combustion with Flameless Reactor

participant:

Unity Power Alliance

project number:

FE0009478

NETL project manager:

Steve Mascaro
steve.mascaro@netl.doe.gov

principal investigator:

August Arrigo
Unity Power Alliance
august.arrigo@unitypoweralliance.com

partners:

MIT
GA Tech
ThermoEnergy
ITEA SpA

performance period:

10/1/12 – 9/30/13

primary project goals

Unity Power Alliance (UPA) will examine a novel pressurized oxy-combustion technology with potential for increasing process efficiency and reducing emissions and costs associated with carbon dioxide (CO_2) capture and compression.

technical goals

- Identify the optimum operating pressure, flue gas recycling method, and oxygen purity level for flameless pressurized oxy-combustion to improve overall system efficiency.
- Confirm the fate of sulfur, nitrogen oxides (NO_x), mercury (Hg), particulate matter, and other toxic pollutants with the goal of substantially reducing or eliminating emissions.
- Confirm that the system design can achieve net water positive conditions and near-zero level discharge.

technical content

Phase I of the project will encompass two independent research efforts: (1) computer modeling and optimization of pressurized oxy-combustion with a flameless reactor; and (2) design, construction, and testing of a bench-scale flameless reactor.

At the outset of Phase I, upon receiving a basis of modeling from ITEA, the Massachusetts Institute of Technology (MIT) will construct a techno-economic computer model of the proposed pressurized oxy-combustion system. The model will be capable of simulating a range of operating pressures, power cycle configurations, and other process conditions, and will utilize empirical data from a 5-MWth pilot facility operating at 4 bar. MIT will use the model to simulate the performance of the proposed system over a range of operating pressures (up to 70 bar). A high operating temperature will also be assumed, in order to take advantage of an advanced heat recovery steam generator design developed by ENEL/ITEA.

The use of high pressure is expected to reduce the cost of electricity by improving generation efficiency through higher heat transfer rates, recycling of high-temperature condensate, and by reducing capital and operating expenses associated with pressurizing the emitted CO_2. In addition to the efficiency benefits, the capture of CO_2 at higher pressure would enable nearly 100 percent CO_2 capture and would cause the power cycle to generate more water than it consumes (the system would be "net water positive"). Condensate could be recycled for use in preparation of the coal-slurry feedstock, significantly reducing the water demands of the system.

In contrast to a conventional coal combustion furnace, flameless combustion approximates the conditions of an isothermal chemical reactor in which temperatures remain uniform and constant throughout the reaction process. This highly efficient, carefully controlled reaction promotes complete combustion of coal at high temperatures with negligible generation of airborne particulates or hazardous pollutants. The majority of the pollutants that are normally released in flue gas are instead permanently entrained in a vitrified or glass-like slag.

As a result, the use of a flameless reactor mitigates the need for costly and energy-intensive flue gas treatment.

In the United States, UPA will provide construction of a bench-scale flameless reactor unit based on ITEA's engineering specifications. This bench-scale system will be installed and tested at Georgia Tech's Carbon Neutral Energy Solutions (CNES) Laboratory, with the objective of confirming that flameless conditions can be sustained at pressures up to 70 bar using various coal feedstocks. The composition of the flue gas will also be monitored to verify that all major pollutants are entrained in a glass-like byproduct. The combined results of the techno-economic modeling and the bench-scale test will enable UPA to proceed with the construction of a 50-MWth demonstration facility for Phase II.

technology advantages

- Proven ability to utilize low-rank coals.
- High CO_2 concentration in flue gas minimizes need for treatment.
  - Vitrified slag eliminates leaching issues leading to a lower cost of disposal when compared to conventional coal combustible residuals.
  - Dramatic reduction in water usage.

R&D challenges

- Vitrification process may not completely entrain all pollutant emissions.

results to date/accomplishments

- Completion of the final design package of the bench-scale reactor, including process flow diagrams, logic control, and engineering and qualified vendor lists such that procurement of the equipment required for testing the bench-scale reactor.
- Bench-scale reactor fabrication initiated.
- Procurement of long lead components and the initiation and procurement of all other bench-scale reactor components.

next steps

- Complete procurement and fabrication of the bench-scale reactor unit.
- Prepare the Georgia Tech facility to accept the pilot and ship all supporting equipment.
- Ship the bench-scale reactor and have it rigged into place, connecting all utilities and appurtenances, and begin preliminary testing and reporting.
- Perform pilot testing at the Georgia Tech facility.

available reports/technical papers/presentations

N/A.

STAGED, HIGH-PRESSURE OXY-COMBUSTION TECHNOLOGY: DEVELOPMENT AND SCALE-UP

technology maturity:

Bench-Scale

project focus:

Staged, High-Pressure Oxy-Combustion

participant:

Washington University

project number:

FE0009702

NETL project manager:

Bruce Lani
bruce.lani@netl.doe.gov

principal investigator:

Richard Axelbaum
Washington University
axelbaum@wustl.edu

partners:

Burns & McDonnell Engineering Company, Inc
EPRI

performance period:

10/1/12 – 9/30/13

primary project goals

Washington University proposes to evaluate the technical feasibility and improved economics of a unique pressurized oxy-combustion system that incorporates a fuel-staged combustion approach. By staging the combustion, the temperature and heat transfer can be controlled while minimizing recycle.

technical goals

- The goal of this one-year project is to perform a techno-economic analysis of a staged, high-pressure oxy-combustion process for producing steam for power plants designed for carbon capture, utilization, and storage (CCUS).
- The project is expected to demonstrate that staged pressurized oxy-combustion is a viable method of capturing, utilizing, and sequestering carbon dioxide (CO_2) and will achieve at least 90 percent CO_2 removal at no more than a 35 percent increase in cost of electricity (COE).

technical content

Staged combustion is an advanced oxy-combustion approach that holds promise to significantly reduce the cost of CO_2 capture from coal-fired power plants. By staging the combustion, the temperature and heat transfer can be controlled. This allows for the elimination of other temperature control processes, such as flue gas recycle or water/steam injection. The potential benefits of this process are higher efficiency, reduced process gas volume, increased radiative heat transfer, reduced oxygen demands, reduced capital equipment costs, increased CO_2 purity entering the carbon compression and purification unit, and reduced auxiliary power demands.

technology advantages

- Increased efficiency.
- Reduced oxygen demands.
- Increased CO_2 purity entering the carbon compression and purification unit.
- Reduced equipment and operation and maintenance costs.

R&D challenges

- Some phenomena, such as radiant heat transfer, nitrogen oxide (NO_x) formation, sulfur partitioning, acid condensation, and metal corrosion rates, have not been measured in high-pressure, low recycle environments.
- The accuracy of the computational fluid dynamics (CFD) and ASPEN Plus models are limited, leading to uncertainties.

results to date/accomplishments

- Completed ASPEN Plus process simulation of a 500 MWe power plant with staged, pressurized oxy-combustion technology.
- Completed conceptual design of module radiant boilers for staged combustion process using CFD modeling.

next steps

- Complete the economic analysis and determine the COE for the base system (supercritical).
- Determine optimal system pressure.
- Complete the economic analysis when incorporating the advanced, ultra-supercritical steam cycle.

available reports/technical papers/presentations

Axelbaum, R.; Kumfer, B.; and Phillips, J., "Staged, Pressurized Oxy Combustion (SPOC)," presented at NETL Kickoff Meeting, Morgantown, West Virginia, October 2012. *http://www.netl.doe.gov/File%20Library/Research/Coal/ewr/co2/project9702-kickoff-10-24-12.pdf*.

CLEAN AND SECURE ENERGY FROM COAL

primary project goals

Through the tightly coupled simulation and experimental designs, the University of Utah will develop computer simulation tools for oxy-coal combustion and chemical looping combustion (CLC), which predict performance with quantified uncertainty.

technical goals

- Oxy-Coal Combustion: Produce predictive capability with quantified uncertainty bounds for pilot-scale, single-burner, oxy-coal operation. The predictive tool developed under this effort will form the basis for application to full-scale, industrial burner operation.
- Chemical Looping Combustion: To develop a new carbon capture technology for coal through CLC and to transfer this technology to industry through a numerical simulation tool with quantified uncertainty bounds.

technical content

The University of Utah, via their Institute for Clean and Secure Energy (ICSE), is pursuing research to utilize the vast energy stored in domestic coal resources, doing so in a manner that will capture carbon dioxide (CO_2) from combustion from stationary power generation. The research is organized around the theme of validation and uncertainty quantification through tightly coupled simulation and experimental designs. The results of the research will be embodied in the computer simulation tools that predict performance with quantified uncertainty; thus transferring the results of the research to practitioners to predict the effect of energy alternatives using these technologies for their specific future application. Overarching project objectives are focused in three research areas and include clean coal utilization for power generation "retrofit;" secure fuel production by in-situ substitute natural gas production from deep coal seams; and environmental, legal, and policy issues.

Two aspects of the power generation "retrofit" areas are:

Oxy-Coal Combustion – The ultimate objective of this task is to produce predictive capability with quantified uncertainty bounds for pilot-scale, single-burner, oxy-coal operation and for a commercial-scale, tangentially fired, oxy-coal boiler. This validation research brings together multi-scale experimental measurements and computer simulations. The predictive tool forms the basis for application to full-scale, industrial burner operations. Particular attention is focused on heat flux, temperature, ignition, coal flame stability, and ash partitioning and ash deposition under pulverized oxy-coal conditions, with a smaller companion effort on application of circulating fluidized beds (CFBs) to oxy-coal combustion conditions. Additional detail on the work being performed follows:

Oxy-Coal Combustion Large Eddy Simulations – The University of Utah is expanding its high-performance simulation tools coupled with direct quadrature method of moments (DQMOM) to quantitatively predict oxy-coal conditions. This work is being performed using experimental data from the University of Utah's 100-kW oxy-fuel combustor (OFC) and Alstom's Boiler Simulation Facility (BSF) tangentially fired boiler. The OFC studies have focused on identifying mechanisms important to flame stability, and the OFC and BSF studies will focus on predicting temperature and heat flux.

technology maturity:

Laboratory-Scale

project focus:

Simulation and Modeling for Oxy-Combustion and Chemical Looping

participant:

University of Utah

project number:

FE0005015

NETL project manager:

David Lang
david.lang@netl.doe.gov

principal investigator:

Phillip Smith
University of Utah
philip.smith@utah.edu

partners:

Brigham Young University

performance period:

9/10/08 – 8/31/13

Near-Field Aerodynamics, Temperature, and Heat Flux in Oxy-Coal Flames – Under this project, the University of Utah has built a 100-kW OFC and has studied the effect of various operating parameters on flame stability under oxy-combustion conditions. The reactor is equipped with quartz and sapphire windows optical access, heated or cooled walls, flue gas recycle, and various burners for studying coaxial, zero-swirl conditions and directed oxygen. The entire system is controlled by Opto22 commercial software with automated data logging of temperature at multiple locations, pressure, and gas concentrations. Using the OFC, the University of Utah is applying advanced diagnostics to investigate temperature and heat flux, both in the burner near field and in the far field, under oxy-fired conditions. The investigators are continuing to work closely with the simulation and advanced diagnostics group to develop an understanding of the most important mechanisms governing both flame stability and resultant heat flux.

Advanced Diagnostics for Oxy-Coal Combustion – The advanced diagnostics team developed the capability for applying particle image velocimetry, particle shadow velocimetry, and high-speed visible-range and infrared photo imaging to laboratory coal burners and is applying these to the 100-kW OFC. They have also developed accompanying image-processing techniques to provide simultaneous 2D velocity maps with corresponding temperature and heat flux information based on emissions in the visible and infrared ranges for oxy-coal flames under various combustion conditions.

Oxy-Coal Combustion in Circulating Fluidized Beds – This work is aimed at developing an understanding of the process dynamics and the impact of key process variables on bed temperature, bed agglomeration, solids recycle rate, and sulfur capture. The recently modified, oxy-fired, pilot-scale CFB is being used to study operational impacts of variations in oxygen concentration, in-bed heat removal, and external heat removal (from the solids recycle stream). In addition, the formation of SO_3 in the high CO_2 and O_2 environment of the CFB is be evaluated to develop an understanding of its potential for sulfuric acid condensation and corrosion.

Single-Particle Oxy-CO_2 Combustion – This subtask will focus on both pulverized coal and fluidized-bed systems, with two objectives: (1) for pulverized coal systems, single-particle kinetics for char oxidation under oxy-CO_2 combustion conditions are being developed using literature data in conjunction with experiments performed at Sandia National Laboratories; (2) for fluidized bed conditions, the impact of an O_2/CO_2 environment on carbon, nitrogen, and sulfur release from coal and coal char is being explored in a bench-scale, single-particle, fluidized-bed reactor. These experimental results will help refine the first-generation, single-particle reaction developed in the previous project phase. Measurements focus on both rate determination with detailed uncertainty quantification for use in model development, as well as the identification of the influence on major operating variables such as oxygen concentration and bed temperature on the release of nitrogen and sulfur impurities.

Ash Partitioning Mechanisms for Oxy-Coal Combustion – The University of Utah is focused on understanding ash partitioning under oxy-coal combustion conditions by considering experiments on two scales: (1) at the bench-scale using a drop tube reactor with coal flow rates of ≈1-4 g/h, to determine fundamental ash partitioning mechanisms using simulated flue gases; (2) at 100 kW, self-sustained combustor scale (coal flow rates of ≈10kg/h) where the focus is on how the amount of recycled flue gas affects ash partitioning mechanisms. In both experiments, ash aerosol particle size distributions and size-segregated ash compositions are obtained using aerosol mobility and impaction techniques. To date, investigators have studied effects of coal type and a wide range of oxygen concentrations and flue gas recirculation rates on ash partitioning behavior.

Chemical Looping Combustion – The ultimate objectives of this task are to develop a new, low-cost carbon capture technology for coal through CLC and to transfer this technology to industry through a numerical simulation tool with quantified uncertainty bounds. The research will primarily focus on CuO/Cu_2O, but also include iron-based carriers for some of the modeling studies using data from the literature for kinetics and verification. It will also include chemical looping with gasification products. The specific research targets for these tasks are to quantitatively identify reaction mechanisms and rates, explore operating options with a laboratory-scale bubbling bed reactor, identify process-modeling economics, and demonstrate and validate simulation tools for a pilot-scale fluidized bed as described below.

CLC Kinetics – The CLC team performed thermogravimetric analysis (TGA) experiments to refine the chemical kinetics of the copper metal/copper oxides CLC oxygen carrier system developed in Phase II. The goal is to extract reaction kinetics for the process modeling studies. The investigators also developed supported copper materials for evaluation in the laboratory-scale studies.

Laboratory-Scale CLC Studies – The CLC team is studying the performance of oxygen carriers in a TGA and fluidized bed-based system, focusing specifically on the high-temperature regime where oxygen uncoupling (CLOU) occurs. The studies range from the characterization of fundamental chemical behavior of copper carriers to more industrially relevant aspects, including long-term performance (capacity, attrition, kinetics and avoidance of agglomeration) over many oxidation and reduction cycles. The investigators also evaluated various supports, including titania and alumina, and CuO loadings to 50 wt%. Based on experience with the single-bed, lab-scale reactor, a design for a larger 10-kWth, dual-bed, continuous flow bench-scale CLOU CLC system process development unit is being developed.

High-Performance Computing (HPC), Computational Fluid Dynamics (CFD) Simulation of a Pilot-Scale Fluidized Bed – The University of Utah is expanding their models and high-performance simulation tools to dense-particle regimes. Their current work is focused on fluidized-bed CLC process applications with no reaction using literature data. Once the fluidized-bed simulation capabilities are developed, the investigators will perform a residence-time study and a sensitivity analysis of the numerical parameters that feed the HPC CFD simulations, including different turbulence models, and model parameters, including different particle size distributions.

Process Modeling and Economics – The investigators are developing process models of the CLOU process, using the ASPEN models developed in Phase II, as well as the kinetics developed in the thermogravimetric studies and laboratory-scale tests. The preliminary mass and energy balance ASPEN modules developed in Phase II have been replaced by more sophisticated expressions of kinetics for given residence times and reactor sizes. The ultimate objective of this subtask is to develop the models such that reactor size, various carrier options, material use, and other economic factors can be minimized, and CLOU can be compared to CLC. For the CLC case, existing kinetic data will be used for iron-based carriers.

technology advantages

- The entire project will provide experimental results and simulation tools to aid in the development, production, and utilization of coal for power generation in a carbon-constrained world. The strength of the tool-set is the inclusion and quantification of uncertainty associated with the individual options in order to better enable informed energy futures decisions.
- If the oxy-coal project is successful, it will provide enabling technologies that promote the deployment of oxy-coal combustion as a cost-effective carbon capture technology for retrofit power applications. The predictive tool will form the basis for application to full-scale, industrial-burner operations. The experimental and simulation work will improve the understanding of critical operating parameters that effect performance, safety, and environmental impacts.
- If successful, the CLC project will lead to the development of a new, low-cost, carbon capture technology and accelerate industry adoption of the technology through a numerical simulation tool with quantified uncertainty bounds. This project will contribute to the knowledge base for CLC and facilitate its deployment.

R&D challenges

- Quantity and quality of available data may inhibit the thoroughness of the analysis.
- Failure of submodels and larger simulations to represent the complex physical and chemical processes associated with energy generation.
- Extensive computation and storage resources necessary to complete the verification and validation quantification analysis.

results to date/accomplishments

- Completed a V/UQ study of flame standoff distance in an oxy-coal furnace and identified important factors determining flame stability.
- Demonstrated high-speed camera and particle-shadow velocimetry techniques for identifying particle shape, size, and velocity in a 100-kW, oxy-coal flame.
- Identified the importance of gasification reactions on coal char burning rates under oxy-fired conditions.
- Developed a submodel for gasification and oxidation of coal under oxy-fuel conditions.
- Developed a better understanding of the effect of oxy-combustion and consequently high CO_2 concentrations in flue gas on the formation of ultrafine (below 0.1 μm) particulate matter.
- Identified that the extent of flue gas recycle under oxy-coal conditions can significantly reduce soot mass emissions.
- Completed a copper attrition study in a laboratory-scale reactor.
- Completed an evaluation of CLOU vs. CLC.
- Developed and tested supported copper oxide materials.

next steps

- Data analysis and integration.
- Preparation of topical reports.
- Preparation of peer-reviewed publications.
- Perform baseline simulations of the Alstom BSF on the U.S. Department of Energy's Titan supercomputer.
- Perform a consistency analysis for the OFC and BSF simulation and experimental results.

available reports/technical papers/presentations

Morris, W.J.; Yu, D.; and Wendt, J.O.L., "A comparison of soot, fine particle and sodium emissions for air-and oxy-coal flames, with recycled flue gases of various compositions," Proceedings of the Combustion Institute. Volume 34, Issue 2, 2013, Pages 3453–3461. *http://www.sciencedirect.com/science/article/pii/S1540748912002283*.

Pedel, J.; Thornock, J. N.; and Smith, P.J., "Ignition of co-axial turbulent diffusion oxy-coal jet flames: experiments and simulations collaboration," Journal of Computational Physics, Volume 160, June 2013, 1112-1128.

Lighty, J.S., et al, "Chemical Looping Combustion and Chemical Looping with Oxygen Uncoupling for Solid Fuels," presented at the 245th ACS National Meeting, Symposium on CO_2 Capture, Sequestration, Conversion and Utilization, New Orleans LA, April 2013.

Sahir, A., et.al, "Rate analysis relevant to chemical-looping with oxygen uncoupling (CLOU) for solid fuels," presented at the 2012 AIChE Annual Meeting, Pittsburgh, Pennsylvania, November 2012.

Sahir, A.; Lighty, J. S.; and Bigelow, L., "The role of open innovation in development of futuristic technologies for carbon capture in coal-fired power plants: an academic perspective," presented at the 2012 AIChE Annual Meeting, Pittsburgh, Pennsylvania, November 2012.

Hecht, E. S., et.al, "Effect of CO_2 and steam gasification reactions on the oxy-combustion of pulverized coal char," Volume 159, Issue 11, November 2012, Pages 3437–3447. *http://repository.icse.utah.edu/dspace/handle/123456789/11236*.

Rezaei, D., et.al, "Near Field Aerodynamic Effects of Pure O_2 Injection in Co-Axial Oxy-Coal Turbulent Diffusion Flames," presented at the 2012 Pittsburgh Coal Conference, Pittsburgh, Pennsylvania, October 2012.

Whitty, K.J., Clayton, C.K., "Measurement and Modeling of Kinetics for Copper-Based Chemical Looping with Oxygen Uncoupling," presented at the 2nd International Conference on Chemical Looping, Darmstadt, Germany, September 2012.

Sahir, A. H.; Tigney, N.; and Lighty, J. S., "Process analysis of chemical looping with oxygen uncoupling (CLOU) and chemical looping combustion (CLC) for solid fuels," presented at the 2nd International Conference on Chemical Looping, Darmstadt, Germany, September 2012.

Lighty, J. S.; Sahir, A. H.; Whitty, K.; and Clayton, C., "Chemical looping with oxygen uncoupling studies at the University of Utah," presented at the American Flame Research Committee Annual Meeting, Salt Lake City, Utah, September 2012.

Lighty, J.S., et al, "Chemical Looping with Oxygen Uncoupling," presented at 2012 NETL CO_2 Capture Technology Meeting, Pittsburgh, Pennsylvania, July 2012. *http://www.netl.doe.gov/publications/proceedings/12/co2capture/presentations/3-Wednesday/J%20Lighty-UUtah-CLOU.pdf*.

Lighty, J. S.; Sahir, A. H.; and Tingey, N., "Leveraging CLOU experimental studies to envision design configurations for coal-fired power plants," presented at the 37th International Technical Conference on Clean Coal and Fuel Systems, Clearwater Clean Coal Conference, Clearwater, FL, June 2012.

Jia, Y., and Lighty, J.S., "Ash Particulate Formation from Pulverized Coal under Oxy-Fuel 2 Combustion Conditions," Environmental Science & Technology 2012 46 (9), 5214-5221. *http://repository.icse.utah.edu/dspace/handle/123456789/11180*.

Sahir, A.; Sohn, H. Y.; Leion, H.; and Lighty, J. S., "Rate analysis of chemical-looping with oxygen uncoupling (CLOU) for solid fuels," Energy and Fuels, 26, 4395-4404 (2012). *http://dx.doi.org/10.1021/ef300452p*.

Pedel, J., "Large-Eddy Simulations of Coal Jet Flame Ignition Using the Direct Quadrature Method of Moments," PhD Thesis, 2012. *http://content.lib.utah.edu/utils/getfile/collection/etd3/id/1783/filename/1783.pdf*.

Sarofim, A., et al, "Chemical Looping Combustion Reactions and Systems," Task 5 Topical Report, 2012. *http://repository.icse.utah.edu/dspace/handle/123456789/11092*.

L. Wang, "Experimental and modeling study of SO_2 behavior during oxy combustion in fluidized beds," PhD Thesis, 2012. *http://content.lib.utah.edu/cdm/ref/collection/etd3/id/1948*.

Wendt, J.O.L., et al, "Oxy-coal Combustion Studies" Task 3 Topical Report, 2012. *http://repository.icse.utah.edu/dspace/handle/123456789/11156*.

Sahir, A.; Lighty, J.; and Sohn, H. Y., "Kinetics of copper oxidation in the air reactor of a chemical looping combustion system using the law of additive reaction times," Industrial & Eng Chem Research, 50 (23), 13330–13339 (2011). *http://pubs.acs.org/doi/abs/10.1021/ie201577g*.

OXY-FUEL TURBOMACHINERY DEVELOPMENT FOR ENERGY-INTENSIVE INDUSTRIAL APPLICATIONS

primary project goals

Clean Energy Systems (CES) set out to design and develop a pre-commercial oxy-fuel (O-F) combustor, able to utilize synthesis gas (syngas), for use in a power generation cycle able to achieve high thermal efficiency with near-zero atmospheric emissions, including carbon dioxide (CO_2). The technology is a high-pressure O-F combustor that produces a steam/CO_2 working fluid for expansion in a turbine. The high pressure O-F combustor utilizes syngas and pure oxygen to produce a working fluid comprised of steam and CO_2 that is used to power turbo generators.

CES also set out to design and develop a commercial-scale O-F turbine (OFT) for deployment in industrial O-F plants that capture >99 percent of the produced CO_2, at competitive cycle efficiency and cost-of-electricity (COE), using diverse fuels, including gasified petcoke/coal, gasified or liquefied renewable fuels, and natural gas (NG).

technical goals

- Develop a detailed design of a 100 megawatt thermal (MWth) oxy-syngas combustor.
- Integrate, commission, and test a first-generation O-F intermediate pressure turbine (IPT) powered by an O-F combustor using NG.
- Design, manufacture, and test an O-F reheat (RH) combustor in a dedicated test rig.
- Develop a detailed design to modify an existing gas turbine to a commercial-scale, second-generation OFT.
- Identify, purchase, disassemble, and inspect a candidate gas turbine for conversion to an OFT.
- Repair/refurbish, manufacture, and assemble new OFT.
- Install, commission, and test commercial-scale OFT.

technical content

The CES cycle involves burning high purity oxygen (O_2) with a gaseous carbonaceous fuel (NG, coal syngas, gasified biomass, etc.) in the presence of water to generate a high-pressure, high-temperature drive gas comprised of approximately 90%v steam and 10%v CO_2 when using NG (75%v steam and 25%v CO_2 when using syngas). The drive gas is controlled to temperatures ranging from 315 to 1,760°C (600 to 3,200°F) and expanded through steam or aero-derivative turbines to produce electricity. In order to achieve high plant efficiencies, the OFT is equipped with a set of RH combustors used to attain greater turbine inlet temperatures (TITs).

CES has prepared the detailed design for a pre-commercial oxy-syngas combustor (100 MWth). The heart of the combustor is the main injector where intricate channels control precise quantities of O_2, fuel, and water entering the main combustion chamber. After stiochiometric combustion, water is introduced in stages to cool the working fluid to the

technology maturity:

100-MWth Commercial-Scale Oxy-Fuel Combustor and Turbine

project focus:

Oxy-Syngas Combustor and Turbine

participant:

Clean Energy Systems

project number:

FC26-05NT42645

NETL project manager:

Travis Shultz
travis.shultz@netl.doe.gov

principal investigator:

Rebecca Hollis
Clean Energy Systems, Inc.
rhollis@cleanenergysystems.com

partners:

Florida Turbine Technologies
Siemens Energy

performance period:

10/1/05 – 3/31/13

desired TIT. Figure 1 is a photograph of an oxy-NG combustor (similar to an oxy-syngas combustor). The main injector assembly is shown on the left-hand side, followed by staged water injection, or cooling.

Figure 1: CES O-F Combustor Assembly

Cycle studies have shown that efficiencies increase with increased turbine operating temperatures. To accelerate the development and deployment of advanced, high-temperature OFTs, CES proposed modifying existing commercial gas turbines, as these routinely operate with higher TITs than traditional steam turbines. The concept was proven when CES successfully modified and demonstrated an O-F J79 turbine at the Kimberlina test facility (Figure 2). Several of the traditional gas turbine components had to be modified or removed completely to convert the engine to a functional OFT. For example, because the O-F combustor can deliver a high-temperature, high-pressure drive gas, both the compressor and combustor sections of the J79 were removed and replaced with a new steam/CO_2 inlet.

Figure 2: OFT-J79 and Electric Generator

To further plant efficiencies, CES developed an RH combustion system to boost TITs to the maximum allowable by the gas turbine's sophisticated materials and cooling schemes. A first-generation O-F RH was designed with development partners Florida Turbine Technologies (FTT) to replace the existing combustor cans of the J79 engine. A test article was manufactured and demonstrated in a dedicated rig at CES's Kimberlina test facility in Bakersfield, California. Although the unit met or exceeded criteria such as exhaust temperature, pressure drop, and flame out resistance, the unit fell short in areas related to uniform mixing.

The next phase of the program focused on the development of an advanced, second-generation, commercial-scale OFT that could be deployed in industrial O-F plants capable of capturing greater than 99 percent of all produced emissions, including CO_2. Again, the team chose to utilize an existing turbine, already capable of elevated operating temperatures, to modify for the steam/CO_2 working environment, as this approach is much faster and much less expensive than building a new design from scratch. The Siemens SGT-900 engine was selected as it most closely resembled the desired operating parameters, such as temperature, pressure, and power output. Along with FTT, Siemens Energy was a development partner on the program, offering unmatched expertise and insight into the engine.

A used SGT-900 B12 Econopac was located and purchased by CES and delivered to a Siemens team in Houston, Texas, for disassembly and inspection. During its lifetime, the unit had been routinely serviced and was found to be in good condition. Reused components were repaired, refurbished, or replaced in preparation for reassembly into the new high-power OFT.

The detailed engineering design to convert the SGT-900 into an OFT was completed by FTT in early 2011. Again, components such as the engine's compressor were to be removed and replaced with a unique thrust balancing system. Siemens led the effort to manufacture any necessary new components, as well as work to reassemble the first-of-its-kind engine.

The new, fully assembled OFT-900 was delivered to the CES test facility in the fall of 2012. A considerable effort was devoted to upgrade the test facility to support commissioning and test of the large-scale engine. This involved increasing the capacities of many of the site's balance of plant (BOP) systems, such as high-pressure NG and O_2 supplies, feed and cooling water systems, and electrical energy dissipation. By the close of the year, the engine was set, anchored, and connected to all BOP equipment and systems. Figure 3 is a picture of the OFT-900 during installation at the Kimberlina test facility.

Figure 3: OFT-900 and Generator During Installation at Kimberlina Test Facility

The successful demonstration of the OFT-900 was completed in March 2013. Testing consisted of both main and engine subsystem checkouts. Critical turbine support systems, such as lube oil, steam feed, and steam cooling, were commissioned prior to powering the OFT-900 with steam/CO_2 from the CES O-F combustor. Numerous tests of the industrial-scale OFT included turbine ramp, deceleration, and synchronization, as well as verification of normal and emergency shutdowns.

On a parallel path, CES designed, manufactured, and tested an RH combustion system to be integrated into the OFT-900. A single-can combustor (one of eight to be installed in the engine) was fabricated and tested in a rig designed to simulate the flow conditions of the OFT-900. Building upon knowledge gained from the first-generation RH development, the second-generation

RH utilized a fuel and O_2 injector, similar to that of the main O-F combustor. Rig tests ramped the unit from low- to full-power output while maintaining desired exhaust temperatures and low-pressure losses.

technology advantages

O-F Combustor: Can burn a variety of fossil and renewable fuels to produce a drive gas consisting of steam and readily separable CO_2. This process (the CES cycle) yields a base-load power cycle that captures virtually 100 percent the CO_2 emissions through condensation of the steam from the effluent. In addition, the high-temperature drive gas produced by the O-F combustor enables higher-efficiency power cycles when coupled with high-temperature turbines.

High-Temperature Turbine: The capabilities of advanced, high-temperature turbines (up to 1,204°C [2,200°F]) permits plant heat rate improvements of 25 percent compared to conventional steam turbines. By utilizing modified gas turbines as O-F IPTs, development schedules and costs are significantly reduced, allowing accelerated deployment of high-temperature, O-F compatible steam turbo-generators to the market.

R&D challenges

High Temperatures: Elevated temperatures subject turbine equipment to increased thermal stress, potentially increasing maintenance/reducing life cycles.

Steam/CO_2 Drive Gas: Condensate from steam/CO_2 drive gases is acidic (carbonic acid), requiring the use of costlier, corrosion-resistant materials. Also, steam/CO_2 transfers heat to metal surfaces more readily than the drive gases from air-fuel combustion, requiring provision for more effective cooling. Use of steam and/or CO_2 as a cooling medium instead of air may be cost effective.

results to date/accomplishments

- Completed the detailed design of a 100-MWth oxy-syngas combustor and its enclosure.
- Completed integrated testing of a 33-megawatt electric (MWe) OFT (modified J79 engine) and oxy-NG combustor.
- Designed, fabricated, and demonstrated a first-generation RH combustor, suitable for integration into an OFT-J79, in a dedicated test rig.
- Completed the detailed engineering design to convert an SGT-900 gas turbine into a 150-MWe OFT.
- Located, purchased, disassembled, and inspected a used SGT-900 B12 power plant.
- Refurbished, repaired, and replaced existing engine components to be reinstalled into a new OFT-900 engine. Manufactured new components required to convert an existing SGT-900 to an industrial-scale OFT. Assembled new OFT-900 engine and delivered to CES test facility.
- Completed the install, commissioning, and test of a commercial-scale OFT-900.
- Upgraded test facility to support commercial-scale OFT demonstration testing.
- Designed, fabricated, and demonstrated a second-generation RH combustor, suitable for integration into an OFT-900, in a dedicated test rig.

next steps

This project ended on March 31, 2013.

Hollis, R.; Skutley, P.; Ortiz, C.; Varkey, V.; LePage, D.; Brown, B.; Davies, D.; and Harris, M., Turbo Expo 2012, "Oxy-Fuel Turbomachinery Development for Energy Intensive Applications," ASME Paper No. GT2012-69988.

Anderson, R.; Viteri, F.; Hollis, R.; Keating, A.; Shipper, J.; Merrill, G.; Schillig, C.; Shinde, S.; and Downs, Anderson, R., et.al, "Oxy-Fuel Gas Turbine, Gas Generator and Reheat Combustor Technology Development and Demonstration," ASME Paper No. GT2010-23001, October 2010.

Anderson, R.; Viteri, F.; Hollis, R.; Hebbar, M.; Downs, J.; Davies, D.; and Harris, M., Turbo Expo 2009, "Application of Existing Turbomachinery for Zero Emissions Oxy-Fuel Power Systems," ASME Paper No. GT2009-59995.

Anderson, R.; MacAdam, S.; Viteri, F.; Davies, D.; Downs, J.; and Paliszewski, A., "Adapting Gas Turbines to Zero Emission Oxy-Fuel Power Plants," ASME Paper No. GT2008-51377, 2008.

Hustad, C., "Development of Low and Zero Emission Fossil Fuel Power Generation in Emerging Niche Markets," ASME Paper No. GT2008-50106, 2008.

Pronske, K.; Trowsdale, L.; MacAdam, S.; Viteri, F.; Bevc, F.; and Horazak, D., "Overview of Turbine and Combustor Development for Coal-Based Oxy-Syngas Systems," ASME Paper No. GT2006-90816, 2006.

Anderson, R.; Baxter, E.; and Doyle, S., "Fabricate and Test an Advanced Non-Polluting Turbine Drive Gas Generator," Final Report under DOE Cooperative Agreement No. DE-FC26-00NT 40804, 1 September 2000 to 1 June 2003.

Anderson, R., "Development of a Unique Gas Generator for a Non-Polluting Power Plant," EISG Report on Project EISG 99-20, California Energy Commission Grant #99-20, May 2001.

JUPITER OXY-COMBUSTION AND INTEGRATED POLLUTANT REMOVAL RESEARCH AND DEVELOPMENT TEST FACILITY

technology maturity:
Pilot-Scale

project focus:
Oxy-Combustion and IPR

participant:
Jupiter Oxygen Corporation

project number:
FC26-06NT42811

NETL project manager:
Timothy Fout
timothy.fout@netl.doe.gov

principal investigator:
Mark Schoenfield
Jupiter Oxygen Corporation
m_schoenfield@jupiteroxygen.com

partners:
Reaction Engineering
Maxon Corporation
Michigan State University
Purdue University
University of Wyoming

performance period:
9/28/06 – 9/30/12

primary project goals

Jupiter Oxygen set out to design, construct, and operate a 5-MWe, high flame temperature, oxy-combustion test facility with a 20-kWe integrated pollutant removal (IPR) bench-scale system to demonstrate carbon dioxide (CO_2) capture from a high flame temperature oxy-combustion process.

technical goals

- Develop high flame temperature oxy-fuel burners.
- Retrofit an existing boiler with high flame temperature oxy-combustion, and operate with coal and natural gas without altering interior boiler materials.
- Collect data on burner performance and boiler heat transfer.
- Conduct a study of the ash and slagging characteristics of the process and its impact on boiler materials.
- Capture CO_2 and collect data on impurity removal using the Jupiter Oxygen combustion process, along with IPR technology developed by NETL.
- Evaluate the high flame temperature approach with respect to capital and operating costs.
- Design, build, and test a new 1-MWth module boiler design for high flame temperature oxy-combustion.

technical content

There are two different approaches to oxy-combustion. Jupiter's approach was to use a high-temperature flame that is minimally tempered with CO_2 (the only tempering occurs as a result of flue gas recycle that is used to motivate coal). High flame temperature oxy-combustion results in improved heat transfer in the boiler's radiant zone. Other oxy-combustion facilities use a low flame temperature approach, which uses large amounts of CO_2/H_2O recycled through or at the burner to cool the flame to a temperature similar to air firing. The unique combination of the high-temperature approach coupled with the IPR system allowed the evaluation of the impact of using high- and low-temperature approaches and energy recovery on a variety of aspects of power plant operations.

Coal analyses, such as heating value, mineralogy, and trace element content; proximate; and ultimate analyses were determined using ASTM procedures. This information was used to determine the effect of the coal characteristics on oxy-combustion performance and the effectiveness of emissions capture. Other performance measurements for the test facility included water tube and web temperature, heat transfer rate, flue gas emissions (nitrogen oxides [NO_x], carbon monoxide [CO], CO_2, sulfur dioxide [SO_2], and trace metals), and loss on ignition (LOI) of the ash. The facility incorporated the following approaches to conduct measurements:

- Flue gas species concentrations measured by Fourier Transform Infrared Spectroscopy (FTIR).
- Ash LOI measured by laboratory testing.
- Heat transfer in the radiant zone determined by computational fluid dynamics (CFD) modeling, spectral flame mapping, furnace gas temperature measurement (at the screen wall and boiler exit), temperature measurements of the flux through the boiler tubes, and optical measurements of the total radiant heat flux from the flame.
- Flame shape and transient behavior were to be evaluated by high-speed video.
- Net heat output from the burner and heat absorbed by the boiler calculated based on combustion and steam-side energy balances.
- Combustion-side mass balances calculated by combining species measurements with mass flows.
- Corrosion monitoring probes used.
- Gas-phase and particulate-phase trace elements, including mercury (Hg), measured in samples from select runs.
- IPR contaminant removal measured by laboratory analyses and FTIR.

The IPR system was added to the pilot facility to remove pollutants from the oxy-combustion flue gas re-circulated stream. The device was used to process 45 kg/hr (100 lb/hr) of flue gas from the facility. The IPR system captured, separated, and produced a dry, supercritical stream of CO_2; a stream of captured pollutants; and a stream of condensed water from the flue gas. Figure 1 shows a representation of major components of a typical IPR system.

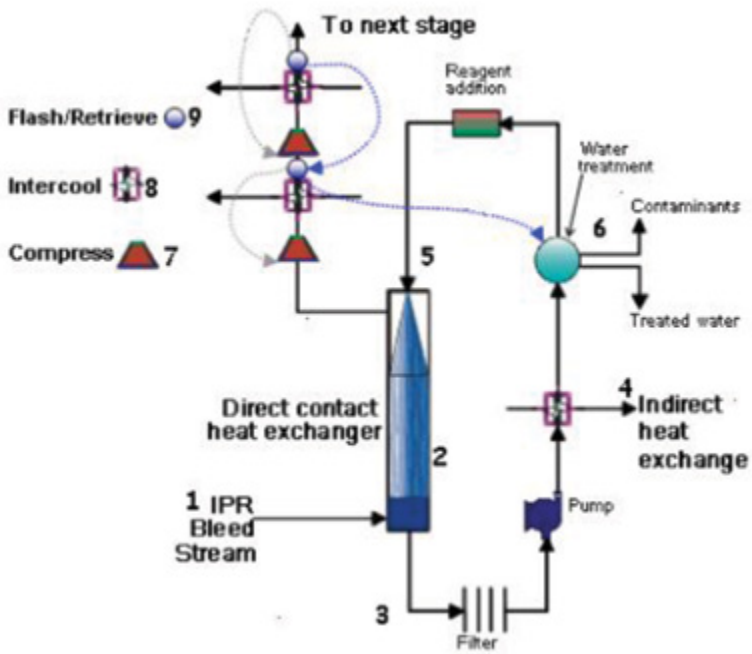

Figure 1: Representation of IPR System Integrated at a Pilot-Scale Facility

The generalized IPR process flow diagram is presented above: a flue gas bleed stream (1) enters the IPR system into a spray tower (2) in which sulfur oxide (SO_x) is removed by a spray stream (reagent addition) as the gas rises. The spray water and combustion condensed water (3) are cooled (4) and partially re-circulated back into the spray tower (5). The water that is not re-circulated back in to the spray tower is treated outside the IPR system (6). As the scrubbed gas leaves the tower, it enters a two-stage reciprocal compressor (7) and a water-cooled, counter flow heat exchanger (8). During the compression stage, separated water can be collected in the collection vessel (9).

technology advantages

- The higher flame temperature improves heat transfer in the radiant zone, which increases boiler efficiency. Oxy-fuel combustion lowers the quantity of flue gas, concentrates CO_2 in the flue gas, and significantly reduces NO_x emissions.
- For retrofit applications, this technology maintains actual water wall and steam temperatures without altering the boiler design or size.
- For new construction, this technology can use a smaller boiler, which provides the same thermal output as larger, existing power plant boilers.

R&D challenges

Design, build, and test a new, 1-MWth module boiler design for high flame temperature oxy-combustion.

results to date/accomplishments

- Completed high flame temperature oxy-combustion burner test runs.
- Completed air-coal burner test runs.
- Retrofitted and operated a 5-MWe equivalent air-fired boiler as an oxy-coal combustion test facility without major boiler modifications. The test facility was operated along with ancillary systems, including oxygen production and generation of appropriate steam.
- Performed a series of high flame temperature oxy-coal burner development tests that resulted in modified generation burners.
- Performed parametric studies with the modified generation oxy-coal burners.
- No increased fouling, slagging, or damage to boiler materials indicated.
- Developed a CFD model of the modified generation burners.
- Designed, constructed, and operated a 20-kWe equivalent IPR facility.
  - Demonstrated CO_2 capture at 95 to 100 percent.
  - 95 percent NO_x, SO_x, and particulate removal; 60 to 90 percent Hg removal.
  - $FeCl_3$/polymer pairing found to be effective flue gas condensate flocculent.
- Full-scale model of a power plant retrofitted with high-temperature oxy-combustion and an IPR system was developed with an economic evaluation.

next steps

This project ended on September 30, 2012.

Schoenfield, M.; Menendez, M.; Ochs, T.; Woodside, R.; and Oryshchyn, D., "Oxy-Combustion Burner and Integrated Pollutant Removal Research and Development Test Facility," Final Report, December 2012.

Schoenfield, M., and Menendez, M., "Oxy-Fuel Burner and Integrated Pollutant Removal Research and Development Test Facility," presented at the 2010 NETL CO_2 Capture Technology Meeting, September 2010. *http://www.netl.doe.gov/publications/proceedings/10/co2capture/presentations/tuesday/Manny%20Menendez%20-%20NT42811.pdf*.

Ochs, T.; Patrick, B.; O'Brien, D.; et.al., "Oxy-Natural Gas Firing of the Jupiter Oxygen Oxy-Fuel Test Facility," Technical paper from the Proceedings of the 34th International Technical Conference on Coal Utilization & Fuel Systems, Jun 2009. *http://www.netl.doe.gov/File%20Library/Research/Coal/ewr/co2/42811-Jupiter-paper-Clearwater-jun09.pdf*.

S. Gerdemann, C. Summers, D. Oryshchyn, B. Patrick, and T. Ochs, "Developments in Integrated Pollutant Removal for Low-Emission Oxy-Fuel Combustion," *http://www.netl.doe.gov/File%20Library/Research/Coal/ewr/co2/DOE_ARC-2005-026.pdf*.

Patrick, B., "Jupiter Oxycombustion and Integrated Pollutant Removal of the Existing Coal-Fired Power Generation Fleet," presented at Annual CO_2 Capture Technology for Existing Plants R&D Meeting, March 2009. *http://www.netl.doe.gov/publications/proceedings/09/CO2/pdfs/42811%20Jupiter%20oxy-combustion%20%28Patrick%29%20mar09.pdf*.

Ochs, T.; et.al., "Results of initial operation of the Jupiter Oxygen Corporation oxyfuel 15 MWth burner test facility," presented at Green House Gas Technologies (GHGT)-9 Conference November 2008. *http://www.netl.doe.gov/File%20Library/Research/Coal/ewr/co2/Nov-2008-GHGT9-JOC---NETL-Results-of-Initial-Operation-of-th.pdf*.

Ochs, T., and Patrick, B., "The Jupiter Oxygen Boiler Test Facility: 3rd Generation," Poster presented at GHGT-9 Conference, November 2008. *http://www.netl.doe.gov/File%20Library/Research/Coal/ewr/co2/2008-JOC-GHGT9-poster.pdf*.

NEAR-ZERO EMISSIONS OXY-COMBUSTION FLUE GAS PURIFICATION

primary project goals

Praxair set out to develop a near-zero emission flue gas purification technology for a retrofitted existing coal-fired power plant with oxy-combustion technology

technical goals

- Design a contaminant-removal system that will produce saleable sulfuric acid and nitric acid without the need for flue gas desulfurization (FGD) or selective catalytic reduction (SCR) units.
- Design a second contaminant removal system that will produce gypsum.
- Achieve greater than 95 percent carbon dioxide (CO_2) capture by incorporating a vacuum pressure swing adsorption (VPSA) unit in an existing plant with a high air ingress, and reduce sulfur oxide (SO_x) and mercury (Hg) emissions by more than 99 percent and nitrogen oxide (NO_x) emissions by more than 90 percent (high- and low-sulfur coal).
- Perform a techno-economic study and an operability and integration evaluation to assess the commercial viability of retrofitting an existing power plant with the proposed technology.

technical content

Two approaches for SO_x/NO_x/Hg removal depend on the SO_x levels in the flue gas. By carrying out these unit operations at high pressure, it is envisioned that capital costs would be reduced while achieving low levels of SO_x and NO_x in the CO_2 stream. For plants with existing FGD and SCR, operating cost savings could be realized by shutting down those units while operating the proposed SO_x/NO_x removal process. For plants burning low-sulfur coal, there is no need for investment in separate FGD and SCR equipment for producing high-purity CO_2.

High air ingress in existing plants limits the amount of CO_2 that can be recovered from oxy-combustion flue gas using a cold box alone to <65 percent. The CO_2-recovery limitation is overcome by using a hybrid process that combines a cold box and VPSA (Figure 1). In the proposed hybrid process, up to 90 percent of CO_2 in the cold box vent stream is recovered by CO_2 VPSA and then recycled and mixed with the flue gas stream upstream of the compressor. The recovery from the process will be >95 percent.

Pollutant Removal

The high-sulfur coal tests were bench-scale and utilized a single gas/liquid contact column that operates at up to 17 atm (250 pounds per square inch absolute [psia]) and 150°C (300°F) for testing multiple reactions. Nitric oxide (NO) in the flue gas is converted to nitrogen dioxide (NO_2), which catalyzes sulfur dioxide (SO_2) oxidation to sulfur trioxide (SO_3). The hydrolysis of SO_3 and NO_2 forms sulfuric and nitric acids.

technology maturity:

Bench-Scale, 5 kg of CO_2/hr

project focus:

Near-Zero Emission Flue Gas Purification

participant:

Praxair, Inc. – Tonawanda, NY

project number:

FC26-08NT0005341

NETL project manager:

Morgan Mosser
morgan.mosser@netl.doe.gov

principal investigator:

Minish Shah
Praxair, Inc. – Tonawanda, NY
minish_shah@praxair.com

partners:

AES
Foster Wheeler
WorleyParsons Canada

performance period:

10/1/08 – 6/30/12

The low-sulfur coal experiments used a single-column unit (2.5 cm [1 inch] diameter, 3.8 cm [1.5 inch] long), and operate up to 17 atm (250 psia) and 93°C (200°F). Activated carbon is used as an adsorbent/catalyst for the capture of SO_x and NO_x from the flue gas. The activated carbon oxidizes the SO_2 to SO_3, NO to NO_2, and a periodic water wash will be used to remove the acids formed.

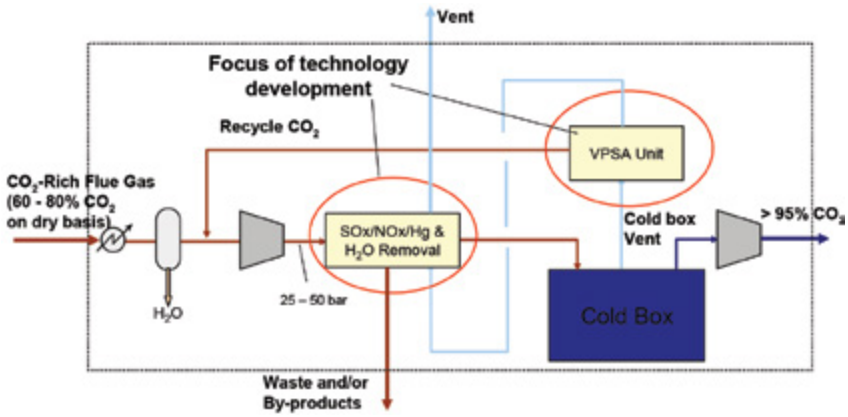

Figure 1: Technology Concept

The chemical reactions for the high- and low-sulfur coal pollutant removal system are summarized below.

High Sulfur Coal Reactions

$NO_2 + SO_2 \rightarrow NO + SO_3$

$NO + 1/2O_2 \rightarrow NO_2$

$SO_3 + H_2O \rightarrow H_2SO_4$

$NOx + H_2SO_4 \leftrightarrow H_2SO_4 \bullet NOx$

$3NO_2 + H_2O \rightarrow 2HNO_3 + NO$

Figure 2: High-Sulfur Coal Pollutant Removal

Low Sulfur Coal Reactions

$SO_2 + 1/2O_2 \rightarrow SO_3$

$NO + 1/2O_2 \rightarrow NO_2$

$SO_3 + H_2O \rightarrow H_2SO_4$

$3NO_2 + H_2O \rightarrow 2HNO_3 + NO$

Figure 3: Low-Sulfur Coal Pollutant Removal System

High CO_2 Recovery Using VPSA

The VPSA unit is a multi-bed unit that performs multiple depressurization/re-pressurizations steps. Oxy-combustion flue gas will enter the CO_2 VPSA from the "cold box" (25 to 35 atm and ambient temperature) that will recover additional CO_2 (produce 80 to 95% CO_2 concentration) and recycle the CO_2 back into the CO_2-rich flue gas stream at ambient pressure. The flue gas stream not recycled from the VPSA contains mainly oxygen (O_2), nitrogen (N_2), and argon (Ar) that will be vented to the atmosphere.

technology advantages

- Cold box-VPSA hybrid technology achieves >95 percent CO_2 recovery, even for plants with high air ingress.
- The flue gas purification process for high-sulfur coal has lower capital and operating costs than FGD and SCR and it allows for revenue from sale of acids.
- The flue gas purification process for low-sulfur coal will not need investment in expensive FGD and SCR units.

R&D challenges

- Sulfuric acid process for $SO_x/NO_x/Hg$ removal from high-sulfur coal:
  - Reactor materials must be able to withstand the operating conditions in the process.
  - Determine an effective NO_x catalyst for producing saleable sulfuric acid.
- Activated carbon process for $SO_x/NO_x/Hg$ removal from low-sulfur coal:
  - Find activated carbon materials that are effective for regeneration based on sorption capacity and ability to maintain performance.
- Identify adsorbents with a tolerance to residual SO_x/NO_x to be used in the VPSA process.
- Determine VPSA cost benefit for recovering additional CO_2.
- Establish proper modifications required for retrofitting existing plants.

results to date/accomplishments

Bench-scale experimental test systems have been built and commissioned for all three experimental programs.

- Sulfuric Acid Process:
  - Gas phase NO oxidation kinetics confirmed.
  - Greater than 98 percent NO_x absorption in one stage.
  - Overall process projected to achieve high SO_x (>99%) and NO_x (>90%) removal efficiencies.
  - Sulfuric acid and nitric acid could not be produced to meet commercial grades.
- Activated Carbon Process:
  - Simultaneous SO_x/NO_x removal demonstrated – SO_2 >99%, NO_x >98%.
  - Process was found to be suitable for power plants burning both low- and high-sulfur coals.
  - A 40-day long continuous operation test confirmed the excellent SO_x/NO_x-removal efficiencies.
  - Further efforts are needed for maintaining long-term activity of activated carbon.
  - Technology is ready for scale up to 10 to 50 tpd CO_2 range.
- High CO_2 Recovery Using VPSA:
  - Three adsorbents selected based on cost, CO_2 recovery, CO_2 purity, and vacuum pump.
  - Process tested in a pilot unit with 12 beds.
  - Process exceeded CO_2 recovery and purity targets.
  - Overall CO_2 recovery from the cold box-VPSA hybrid process was projected to be >99% for plants with low air ingress (2%) and >97% for plants with high air ingress (10%).
- Economic analysis was performed to assess value of the near-zero emissions CO_2 processing unit (CPU).
  - For greenfield plants, cost of avoided CO_2 and cost of captured CO_2 are generally about 11 to 14% lower using the near-zero emissions CPU compared to using a conventional CPU.
  - For older plants with high air intrusion, the cost of avoided CO_2 and capture CO_2 are about 18 to 24% lower using the near-zero emissions CPU.
  - Lower capture costs for near-zero emissions CPU are due to lower capital investment in FGD/SCR and higher CO_2 capture efficiency.
- Near-zero emissions CPU technology developed based on the activated carbon process and cold box-VPSA hybrid process.
  - Technology is projected to work for both low- and high-sulfur coal plants.
  - The near-zero emissions CPU technology is projected to achieve near-zero stack emissions, produce high-purity CO_2 relatively free of trace impurities, and achieve ≈99% CO_2 capture rate while lowering the CO_2 capture costs.

next steps

This project ended on June 30, 2012.

available reports/technical papers/presentations

Shah, M. M. et al., "Purification of oxy-combustion flue gas for SO_x/NO_x removal and high CO_2 recovery," presented at the 2nd Oxyfuel Combustion Conference, Yeppoon, Australia, September 2011. *http://www.ieaghg.org/docs/General_Docs/OCC2/Presentations/OCC2%20-%20Near%20Zero%20Emissions%20CPU%20-%20Sept%202011%20-%20no%20animation.pdf*.

Shah, M. M., et.al, "Near-Zero Emissions Oxy-Combustion Flue Gas Purification," presented at the 2011 NETL CO_2 Capture Technology Meeting, August 2011. *http://www.netl.doe.gov/publications/proceedings/11/co2capture/presentations/3-Wednesday/24Aug11-Shah-Praxair-Near%20Zero%20Emissions%20OxyComb.pdf*.

Shah, M. M., et.al, "Near-Zero Emissions Oxy-Combustion Flue Gas Purification," presented at the 2010 NETL CO_2 Capture Technology Meeting, September 2010. *http://www.netl.doe.gov/publications/proceedings/10/co2capture/presentations/tuesday/Minish%20Shah%20-%20NT0005341.pdf*.

OXY-COMBUSTION BOILER MATERIAL DEVELOPMENT

primary project goals

Foster Wheeler set out to conduct a laboratory test program to assess the corrosion characteristics of oxy-combustion relative to air-fired combustion for pulverized coal (PC)-fired boilers; identify the corrosion mechanisms involved; and determine oxy-combustion's effects on conventional boiler tube materials, conventional protective coatings, and alternative materials and coatings when operating with high- to low-sulfur coals.

technical goals

- Conduct computational fluid dynamic (CFD) modeling of air- and oxy-fired PC boilers operating with high-, medium-, and low-sulfur coals to determine the flue gas compositions that will exist throughout these units and especially along the furnace waterwalls where highly corrosive microclimates can exist.
- Conduct corrosion tests using coupons of conventional and advanced boiler tube materials that are coated with deposits representative of low- to high-sulfur coals and exposed to the CFD-predicted oxy-combustion and air-fired flue gases for up to 1,000 hours in electric furnaces using synthesized gases from pressurized cylinders.
- Conduct post-test macroscopic and microscopic analyses of the material coupons to identify corrosion mechanisms, evaluate the corrosiveness of oxy-fired flue gas relative to air-fired flue gas, and identify materials suitable for oxy-combustion.

technical content

An oxy-combustion boiler retrofit will utilize flue gas recycle to maintain the heat absorption of the original air-fired boiler and limit the combustion temperature. With air nitrogen (N_2) eliminated, and with the recycle consisting of carbon dioxide (CO_2) and water vapor (H_2O), along with corrosive products of combustion, the level of reducing and corrosive gases in the boiler (e.g., carbon monoxide [CO], sulfur dioxide [SO_2], sulfur trioxide [SO_3], hydrogen sulfide [H_2S], and hydrogen chloride [HCl]) will increase and could cause increased corrosion. To assess the corrosiveness of oxy-combustion flue gas, coupons of conventional and advanced waterwall and superheater/reheater materials were exposed to oxy- and air-fired flue gases in electric tube furnaces. Rectangular-shaped coupons, typically 19 mm (3/4 inch) wide by 25 mm (1 inch) high by 3 mm (1/8 inch) thick, will be used to investigate tube materials, tube welds, and tube weld overlays; bullet-shaped coupons, typically 19 mm (3/4 inch) in diameter by 38 mm (1-1/2 inch) high, will investigate thermal spray coatings. The conventional and advanced materials to be tested are listed in Table 1 and Table 2.

technology maturity:
Laboratory-Scale

project focus:
Boiler Materials for Oxy-Combustion

participant:
Foster Wheeler

project number:
NT0005262

NETL project manager:
Timothy Fout
timothy.fout@netl.doe.gov

principal investigator:
Horst Hack
Foster Wheeler
horst_hack@fwc.com

partners:
None

performance period:
10/1/08 – 1/31/12

TABLE 1: WATERWALL MATERIALS

	Material	Description	Boiler Use	Nominal Composition
1	Tube	SA210-A1	Conventional	0.27% Carbon
2	Tube	SA213-T2	Conventional	1/2 Cr - 1/2 Mo
3	Tube	SA213-T11	Conventional	1-1/4 Cr - 1/2 Mo
4	Weld	T11 to T11	Conventional	1-1/4 Cr - 1/2 Mo
5	Weld Overlay	309L StnStl	Conventional	24 Cr
6	Weld Overlay	Inconel 622	Conventional	21 Cr - 55 Ni
7	Weld Overlay	VDM Alloy 33	Conventional	33 Cr - 31 Ni
8	Thermal Spray	IGS UTEx 5-450	Relatively New	40 Cr - 55 Ni
9	Thermal Spray	IGS UTEx 5-480	Relatively New	25 Cr - 60 Ni
10	Thermal Spray	IGS UTEx 5-500	Relatively New	15 Cr - 80 Fe

TABLE 2: SUPERHEATER/REHEATER MATERIALS

	Material	Description	Boiler Use	Nominal Composition
1	Tube	T22	Conventional	2-1/4 Cr - 1 Mo
2	Tube	304H StnStl	Conventional	18 Cr - 8 Ni
3	Tube	347H StnStl	Conventional	18 Cr - 9 Ni
4	Tube	T91/T92	Newer Boilers	9 Cr
5	Tube	NF709	Newer Boilers	20 Cr - 25 Ni
6	Tube	HR_3C	Newer Boilers	25 Cr - 20 Ni
7	Weld Overlay	Inconel 622	Conventional	21 Cr - 55 Ni
8	Weld Overlay	VDM Alloy 33	Conventional	33 Cr - 31 Ni
9	Weld Overlay	Inconel 72	Conventional	44 Cr - 55 Ni
10	Welded Coupon	T22 to 304H	Conventional	1-1/4 Cr - 18 Cr

The coupons, mounted in racks and inserted in electric tube test furnaces (see Figure 1), were exposed for 1,000 hours to synthesized air- and oxy-fired flue gases. Foster Wheeler set out to conduct CFD analyses of nominal 500-megawatt electric (MWe) air- and oxy-fired boilers (see Figure 2) to determine the range of flue gas compositions that existed throughout these boilers and especially along their furnace walls where highly corrosive microclimates can exist; based on those ranges, gas compositions were to be selected for the corrosion tests. The test gases were synthesized/blended from gas cylinders and consist of varying concentrations of CO_2, H_2O, N_2, CO, SO_2, H_2S, and HCl.

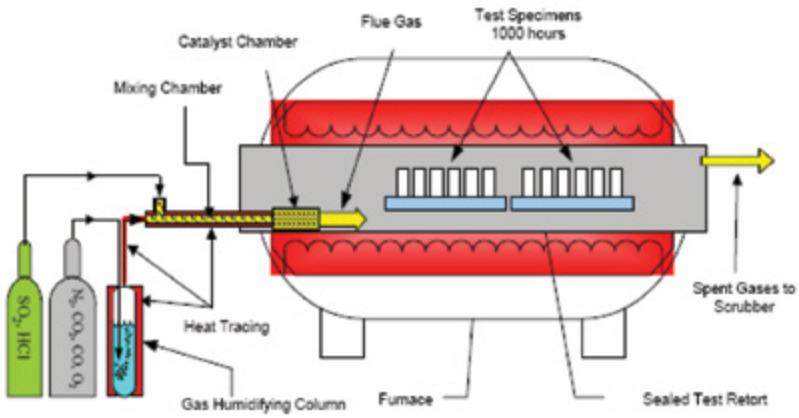

Figure 1: Coupons Mounted in Racks and Inserted in Electric Tube Test Furnaces

The material coupons were coated with three types of synthetic ash deposits representative of high-, medium-, and low-sulfur coals. The deposits were produced from reagent grade powders that are mixed and applied to the coupons as a paste. The water-wall materials were tested at three temperatures: 399, 468, and 538 °C (750, 875, and 1,000 °F); the superheater/reheater materials will be tested at: 538, 593, and 649 °C (1,000, 1,100, and 1,200 °F) – temperatures that span the range of boilers operating at subcritical and supercritical pressure. Upon completion of exposure testing, the condition of the coupons was evaluated macroscopically and microscopically and the materials were assessed for their suitability for oxy-combustion.

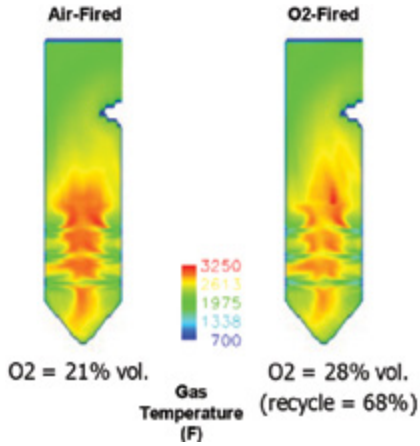

Figure 2: Example of Foster Wheeler CFD Analyses

technology advantages

This project will identify the corrosion mechanisms that occur under oxy-combustion and assess the suitability of conventional and advanced boiler materials for this new combustion environment.

R&D challenges

Flue gas recycle used for the oxy-combustion process could increase corrosion of boiler materials.

results to date/accomplishments

- CFD analyses of nominal 500-MWe PC boilers (wall- and tangential-fired) have identified the bulk flue gas compositions and waterwall microclimates that will exist in these units under air- and oxy-firing.
- The most corrosive gas compositions together with intermediate levels of corrosiveness for each combustion mode were selected for use in laboratory electric furnace corrosion studies.

- The boiler materials coupon testing included five 1,000-hour test series; four test series investigated furnace waterwall microclimates that range from highly reducing (20 percent CO) to mildly oxidizing (1 percent O_2) conditions, and one test series investigated the oxidizing (nominally 3 percent O_2) superheater/reheater condition. The superheater/reheater and three furnace wall test series have been completed and the fifth and final test series (waterwall with 5 percent CO) began in January 2011. An example of some preliminary corrosion test results are shown below in Figure 3 for waterwall materials exposed to 2 percent CO air- and oxy-fired microclimates at 875°F for 1,000 hours with three levels of iron sulfide (FeS) deposits.

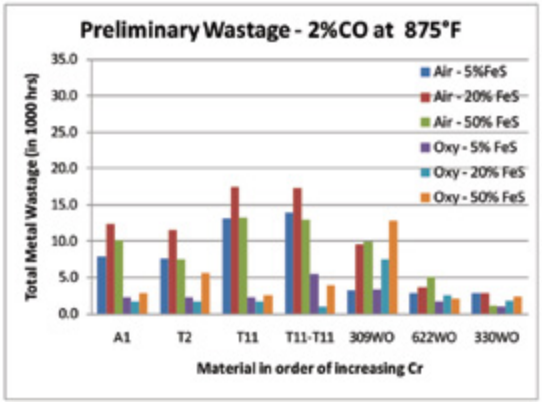

Figure 3: Example of Preliminary Corrosion Results for Waterwall Materials

- The preliminary 1,000-hour results show that under oxy-combustion:
  - The effect of oxy-combustion on test coupon corrosion varies with the type of material, deposit, and temperature.
  - Superheater/reheater and waterwall wastages are generally less than under air-firing.
  - Superheater/reheater and waterwall wastage increases with increasing temperature and tends to decrease with increasing chromium concentrations.
  - Waterwall wastages at 2 percent CO were higher than at 1 percent O_2.

next steps

This project ended on January 31, 2012.

available reports/technical papers/presentations

Robertson, A.; Agarwal, H.; Gagliano, M.; Seltzer, A.; and Wang, L., "Oxy-Combustion Boiler Material Development," presented at the 2011 NETL CO_2 Capture Technology Meeting, Pittsburgh, Pennsylvania, August 2011, *http://www.netl.doe.gov/publications/proceedings/11/co2capture/presentations/3-Wednesday/24Aug11-Robertson-FW-Oxy-Comb%20Boiler%20Matl.pdf*.

Robertson, A.; Agarwal, H.; Gagliano, M.; and Seltzer, A., "Oxy-Combustion Boiler Material Development," presented at the 2010 NETL CO_2 Capture Technology Meeting, Pittsburgh, Pennsylvania, September 2010. *http://www.netl.doe.gov/publications/proceedings/10/co2capture/presentations/tuesday/Archie%20Robertson-NT0005262.pdf*.

Robertson, A., "Oxy-Combustion Boiler Material Development," presented at the Annual NETL CO_2 Capture Technology for Existing Plants R&D Meeting, Pittsburgh, Pennsylvania, March 2009. *http://www.netl.doe.gov/publications/proceedings/09/CO2/pdfs/5262%20Foster%20Wheeler%20oxy-combustion%20materials%20%28Robertson%29%20mar.pdf*.

DEVELOPMENT OF COST-EFFECTIVE OXY-COMBUSTION TECHNOLOGY FOR RETROFITTING COAL-FIRED BOILERS

technology maturity:

Pilot-Scale; Equivalent to 13 tons of CO_2/day

project focus:

Oxy-Combustion Design for Retrofits

participant:

Babcock & Wilcox Power Generation Group

project number:

FC26-06NT42747

NETL project manager:

José Figueroa
jose.figueroa@netl.doe.gov

principal investigator:

Hamid Farzan
Babcock & Wilcox PGG
hfarzan@babcock.com

partners:

Air Liquide
Battelle

performance period:

4/1/06 – 3/31/11

primary project goals

Babcock & Wilcox Power Generation Group, Inc. (B&W) set out to develop oxy-combustion technology for application to new and existing Cyclone and wall-fired boilers. This two-phase research project was aimed at further advancing the technology through pilot-scale testing and full-scale engineering and economic analyses of a reference coal-fired plant.

technical goals

- Conduct pilot-scale testing to evaluate the effect of coal rank (i.e., bituminous, subbituminous, and lignite) on oxy-combustion boiler operation.
- Determine the equipment requirements for the boiler island, flue gas purification, carbon dioxide (CO_2) compression, CO_2 transportation, and CO_2 sequestration for different coal ranks and boiler designs.
- Investigate the potential for multi-pollutant (nitrogen oxides [NO_x], sulfur dioxide [SO_2], and particulate) emissions control.
- Validate an existing three-dimensional computational flow, heat transfer, and combustion model for oxy-combustion scale-up to a commercial-size boiler.
- Conduct an engineering and economic assessment of the technology for commercial-scale retrofit and green field application for Cyclone and wall-fired boilers.
- Assess CO_2 capture cost reductions via energy integration of the air separation unit (ASU), flue gas purification, and CO_2 compression systems.
- Evaluate the impact of oxy-combustion implementation on net power production and cost of electricity (COE) for Cyclone and wall-fired boilers.

technical content

B&W had previously conducted pilot-scale oxy-combustion testing for wall-firing at 1.8 and 30 MWth. In this project, a pilot-scale evaluation – 14 GJ/hr (6 million Btu/hr) – was conducted for three coals using a Cyclone boiler configuration at its Barberton, Ohio, test facility. An illustration of the oxy-combustion pilot-scale test facility is shown below (Figure 1). The three types of coal tested were North Dakota lignite, Western subbituminous, and Eastern bituminous. Each of the oxy-combustion tests were run for 100 continuous hours to assess the slagging, fouling, heat transfer, and overall operability characteristics. Data from the pilot-scale testing was used to validate a computational fluid dynamic (CFD) model of the oxy-combustion process. From the test data, equipment required for flue gas purification, compression, transportation, and sequestration was determined for the engineering and economic assessment.

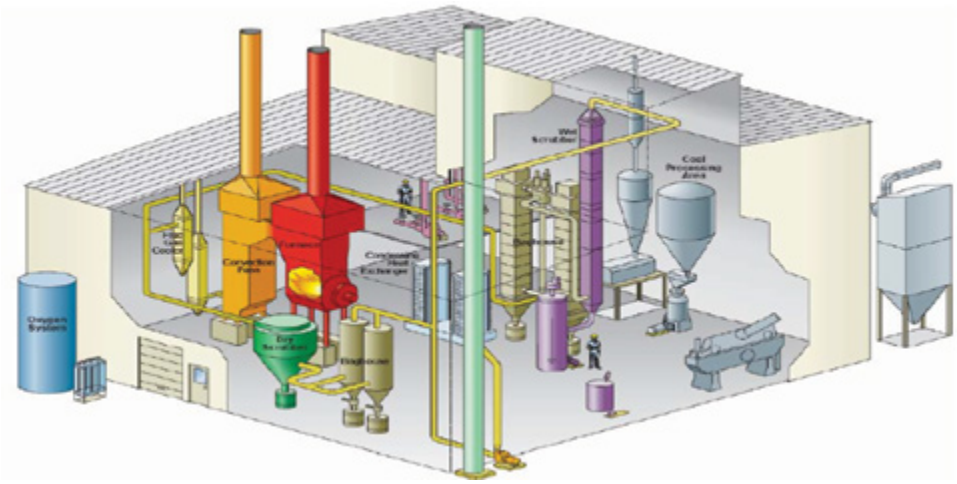

Figure 1: Illustration of B&W's Oxy-Combustion Pilot-Scale Test Facility in Barberton, Ohio

A modeling assessment was also conducted to compare three CO_2 capture purification processes: (1) no purification – only drying to Kinder Morgan pipeline specifications with water (H_2O) at 600 parts per million volume (ppmv); (2) partial condensation at cryogenic conditions (cold box) – 95 percent CO_2 purity target; and (3) cold box including distillation – 1 ppm oxygen (O_2) target. The purification assessment included investigation of operating costs, energy requirements, and effects of air infiltration. The following graph (Figure 2) represents a model analysis showing the effect of purification process on CO_2 recovery, purity, and specific energy.

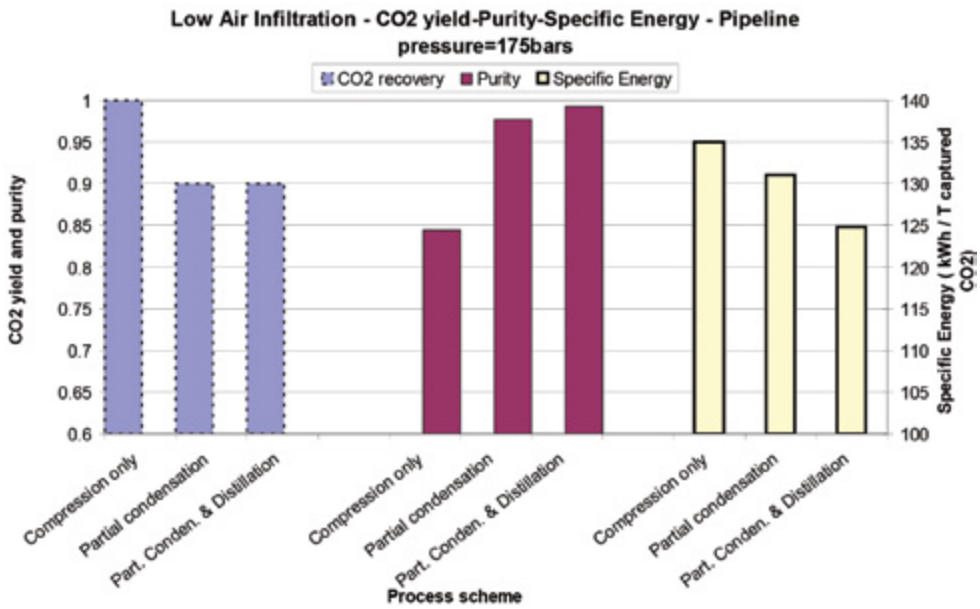

Figure 2: Model Analysis Showing Effect of Purification Process on CO_2 Recovery, Purity, and Specific Energy

technology advantages

Oxy-combustion has the potential to offer a lower-cost solution for CO_2 capture compared to post-combustion CO_2 capture technologies.

R&D challenges

The necessary level of flue gas purification remains an issue regarding potential adverse impacts on CO_2 transportation and storage:

- Potential precipitation problems with SO_2 forming sulfate minerals (e.g., anhydrite) if high-sulfur coal is used without scrubbing.
- Non-condensable gases, such as nitrogen (N_2) and O_2, could affect subsurface processes that might require more purification. For example, non-condensable gases could create multi-phase flow, which can reduce injectivity or the capacity of the storage site.

results to date/accomplishments

Completed oxy-combustion pilot-scale testing with the following general results:

- Oxy-combustion is a technically feasible technology for wall-fired and Cyclone boilers.
- The flame stability and Cyclone slagging characteristics was not negatively impacted by oxy-combustion.
- Boiler emissions (NO_x, carbon monoxide [CO], and unburned combustibles) to the atmosphere are lower for oxy-combustion than air-firing.
- Radiant boiler and convection pass heat absorptions under optimum oxy-combustion conditions was similar to air-firing.
- Higher CO_2 (up to 90%) levels were achieved when air leakage was minimized by reducing pressure drop in the boiler back-end equipment.
- Sulfur dioxide must be scrubbed from recycle gas for high-sulfur coal applications to maintain acceptable boiler corrosion.
- Higher sulfur trioxide (SO_3) concentrations occur with oxy-combustion than air-firing at the convection pass exit that could increase corrosion if the flue gas temperature goes below the acid dew point.

Completed engineering feasibility and economic analysis with the following general results:

- Co-sequestration of CO_2 and SO_2 might be feasible in deep geological reservoirs. It was concluded that the pipeline transportation corrosion by acid gas can be minimized by removing the moisture from the flue gas.
- Modeling of the compression and purification unit (CPU) demonstrated that the overall energy requirement is lower if flue gas inerts are removed in the CPU rather than compressing the entire flue gas for pipeline transport.
- Oxy-combustion is an economically viable technology. The incremental cost of oxy-combustion for existing boilers varied between $.05 to $.07/kWh, which is competitive with other technologies.
- COE for green field boilers using oxy-combustion coupled with ultra-supercritical boilers was 25 percent higher than COE for a supercritical boiler under air-firing without CO_2 capture, which is below the U.S. Department of Energy/National Energy Technology Laboratory (NETL) target of 35 percent.
- Oxy-combustion can be applied to the majority of the existing wall-fired and Cyclone boilers depending on space and existing equipment. The site requirements are similar to those for post-combustion capture.

next steps

This project ended on March 31, 2011.

available reports/technical papers/presentations

Farzan, H., et.al, "Development of Cost Effective Oxy-Combustion for Retrofitting Coal-Fired Boilers," presented at the 2010 NETL CO_2 Capture Technology Meeting, Pittsburgh, Pennsylvania, September 2010. *http://www.netl.doe.gov/publications/proceedings/10/co2capture/presentations/tuesday/Hamid%20Farzan-NT42747.pdf*.

Farzan, H., et.al, "Development of Cost Effective Oxy-Combustion for Retrofitting Coal-Fired Boilers," presented at the Annual NETL CO_2 Capture Technology for Existing Plants R&D Meeting, Pittsburgh, Pennsylvania, March 2009. *http://www.netl.doe.gov/publications/proceedings/09/CO2/pdfs/42747%20B%26W%20oxy-combustion%20%28Farzan%29%20mar09.pdf*.

Sass, B.M., et.al, "Considerations for Treating Impurities in Oxy-Combustion Flue Gas Prior to Sequestration," presented at the 9th International Conference on Greenhouse Gas Control Technologies, Washington, DC, November 2008.

Farzan, H., et.al, "Developing Oxy-combustion for Retrofitting Coal-fired Boilers," presented at the 7th Annual Conference on Carbon Capture and Sequestration, Pittsburgh, Pennsylvania, May 2008. *http://www.netl.doe.gov/File%20Library/Research/Coal/ewr/co2/42747-B-W-oxy-combustion-7th-CCS-conference-2008.pdf*.

FLUE GAS PURIFICATION UTILIZING SO_x/NO_x REACTIONS DURING COMPRESSION OF CO_2 DERIVED FROM OXYFUEL COMBUSTION

technology maturity:

Pilot-Scale, 2.45 Tonnes CO_2/Day

project focus:

Flue Gas Purification

participant:

Air Products and Chemicals

project number:

FC26-08NT0005309

NETL project manager:

Timothy Fout
timothy.fout@netl.doe.gov

principal investigator:

Kevin Fogash
Air Products and Chemicals
fogashkb@airproducts.com

partners:

N/A

performance period:

10/1/08 – 9/30/10

primary project goals

Air Products and Chemicals set out to design and develop a system for purifying an oxy-combustion-derived flue gas by utilizing the reactions of sulfur oxides (SO_x) and nitrogen oxides (NO_x) that occur during compression, leaving behind a pressurized, pure stream of carbon dioxide (CO_2).

technical goals

- Design and construct a 15-atm flue gas pilot development unit (PDU) for the removal of SO_x and NO_x from actual oxy-combustion-derived CO_2-rich flue gas.
- Evaluate PDU performance based on effluents at different pressures and water recycle rates.
- Characterize the PDU effluents to asses any change in performance.
- Develop an engineering model to describe the 15-atm PDU performance.

technical content

Acidic gases must be removed from a CO_2 stream prior to pipeline transportation to avoid corrosion and to comply with purity requirements for applications such as enhanced oil recovery (EOR) and geological storage. In order to address this requirement, Air Products and Chemicals worked on developing a novel approach to remove SO_x and NO_x from the flue gas by converting them to sulfuric acid and nitric acid (HNO_3).

In order to determine the effect of pressure on sulfur dioxide (SO_2) and nitric oxide (NO) conversion, previous experiments were performed where one standard liter per minute (sl/min) of gas was supplied at both 8 and 15 atm. The results are shown in the Table 1.

TABLE 1: PRESSURE VS. CONVERSION

	15 atm			8 atm		
	Inlet	After Compressor and Receiver	Conversion	Inlet	After Compressor and Receiver	Conversion
ppm SO_2	900	20	98%	950	150	84%
ppm NO_x	500	50	90%	390	120	68%

The conversion rate clearly increases significantly with pressure. Therefore, it is logical to assume that these contaminants can be removed during the compression of CO_2.

The PDU developed for this project includes three main units, as indicated below: the scrubber/condenser, the compressor, and the reactor. Fine particulate ash and acid mist in the flue gas are removed prior to compression to avoid damage to the compressor.

The compressor increases the pressure of the gas from near-atmospheric to approximately 15 atm in a multistage adiabatic compressor unit. After the initial compression, the flue gas is cooled prior to entering the reactor. In the reactor, the flue gas is contacted with water to obtain complete conversion of SO_2 to sulfuric acid and high conversion of NO_x to HNO_3.

Multiple tests were conducted within two campaigns of the project. The host site was Alstom Power's 15-MWth oxy-combustion pilot unit. The 15-bar reactor system received a slipstream of 0.25 to 0.33 MWth equivalent flow rate from the Alstom unit for several days. A variety of process conditions were tested, including changes in SO_x and NO_x feed levels, to enable a broad understanding of the technology. The flue gas PDU is shown in Figure 2. In the reactor, the flue gas was contacted with water to obtain up to complete conversion of SO_2 to sulfuric acid and high conversion of the NO_x to HNO_3. Figure 3 shows an example of the results obtained.

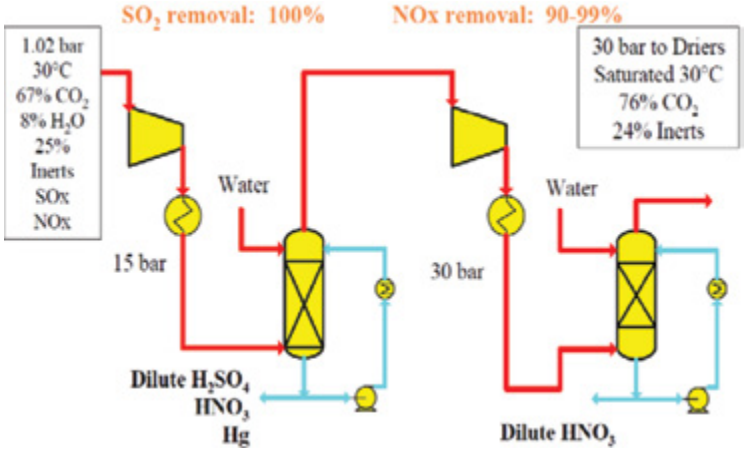

Figure 1: Flue Gas Pilot Development Unit (PDU)

Figure 2: PDU at the Host Site

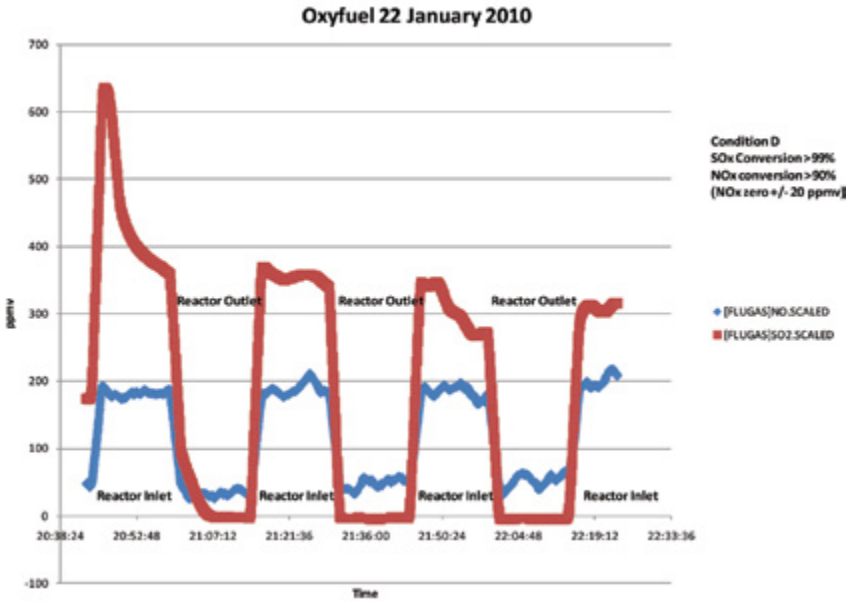

Figure 3: Example Results from the Oxyfuel Test

technology advantages

By incorporating an efficient NO_x and SO_x removal system with a compressor, the need for low NO_x burners, flue gas desulfurization (FGD), and post-combustion NO_x control systems are greatly reduced or eliminated for oxy-combustion plants. In particular, this system allows for a degree of freedom to optimize any upstream purification needs and target reduction in size or removal of upstream equipment for the retrofit of an existing plant or the construction of a new plant.

R&D challenges

- Obtaining sufficient data for engineering design and to further develop the understanding of the effect of residence time, pressure, and temperature on the unit performance.
- The prolonged presence of acid gases in the system and the presence of such gases at high pressures in the compressor may lead to the requirement of more advanced materials of construction.

results to date/accomplishments

- Developed a simulation of the flue gas PDU and modeled the reactions occurring within the reactor.
- Conducted simulations to understand the influence of liquid to vapor flow rates on SO_2 and nitrogen dioxide (NO_2) conversions, as well as overall residence time in the reactor.
- Developed a design specification for the PDU and auxiliary equipment.
- Completed construction and installed the PDU at host site.
- For the overall process, total SO_2 removal was 40 to 100 percent (based on gas compositions).
- For the overall process, total NO_x removal was 60 to 90 percent (based on gas compositions).
- The effects of variations in the SO_2/NO_x feed ratio, column pressure, gas flow rate, and liquid recirculation on the reactor performance were elucidated. Process performance was most sensitive to SO_2/NO_x feed ratio over the range of parameter values investigated.
- SO_2 was removed from the flue gas through both sulfite and sulfate mechanisms.
- No evidence of NO_x removal was observed prior to compression, confirming that elevated pressure was required to accelerate the oxidation reaction of NO to NO_2 to a rate at which appreciable NO_x removal (as HNO_3) could be achieved.

next steps

This project ended on September 30, 2010.

available reports/technical papers/presentations

Fogash, K., "Flue Gas Purification Utilizing SO_x/NO_x Reactions During Compression of CO_2 Derived from Oxyfuel Combustion," presented at the 2010 NETL CO_2 Capture Technology Meeting, September 2010. *http://www.netl.doe.gov/publications/proceedings/10/co2capture/presentations/tuesday/Kevin%20Fogash%20-%20NT0005309.pdf*.

Fogash, K., "Flue Gas Purification Utilizing SO_x/NO_x Reactions During Compression of CO_2 Derived from Oxyfuel Combustion," presented at the Annual NETL CO_2 Capture Technology for Existing Plants R&D Meeting, March 2009. *http://www.netl.doe.gov/publications/proceedings/09/CO2/pdfs/5309%20Air%20Products%20oxy-combustion%20purification%20%28Fogash%29%20mar09.pdf*.

White, V.; Allam, R.; and Miller, E., "Purification of Oxyfuel-Derived CO_2 for Sequestration or EOR," Technical paper presented at the 8th International Conference on Greenhouse Gas Control Technologies in Trondheim, Norway, 2006. *http://www.netl.doe.gov/File%20Library/Research/Coal/ewr/co2/5309-Air-Products-oxy-combustion-GHGT-8-paper.pdf*.

OXYGEN-FIRED CO_2 RECYCLE FOR APPLICATION TO DIRECT CO_2 CAPTURE FROM COAL-FIRED POWER PLANTS

primary project goals

Southern Research Institute (SRI) set out to design and develop carbon dioxide (CO_2) recycle technology for oxy-combustion retrofit applications.

technical goals

- Modify the 1-MWth pilot-scale Combustion Research Facility (CRF) to allow oxy-combustion and CO_2-recycle operations.
- Design, manufacture, and install an oxy-combustion burner specifically for the CRF.
- Collect data on furnace temperatures, unburned carbon (UBC), gas composition, and flow rates into and out of the furnace.
- Evaluate the effect of various parameters, including firing configuration, oxygen (O_2) purity, CO_2 recycle rate, O_2 concentration, and coal type.

technical content

SRI developed flue gas recycle for oxy-combustion retrofit application to coal-fired utility boilers in order to avoid the excessive flame temperatures that are associated with oxy-combustion and to maintain flow and heat-transfer requirements in the furnace and convective sections.

SRI conducted the pilot-scale, oxy-combustion experiments using a modified CRF. Figure 1 contains a diagram that represents the CRF with the necessary modifications. These modifications include the addition of an O_2 storage tank and concrete pad; O_2 skid, control, and safety systems; a new burner by Maxon that is designed for O_2 combustion and CO_2 recycle; the additional ducting to allow flue gas recirculation to the burner; and the decrease in ducting size to account for smaller flue gas flow rate.

technology maturity:

Pilot-Scale Using Actual Flue Gas, 25 tonnes of CO_2/day

project focus:

Evaluation of Gas Recycle for Oxy-Combustion

participant:

Southern Research Institute

project number:

FC26-05NT42430

NETL project manager:

Timothy Fout
timothy.fout@netl.doe.gov

principal investigator:

Bob Dahlin
Southern Research Institute
dahlin@southernresearch.org

partners:

CORR Systems
Doosan Power Systems
Linde Gas
Maxon Corporation
Reaction Engineering International
Southern Company

performance period:

9/27/05 – 9/25/10

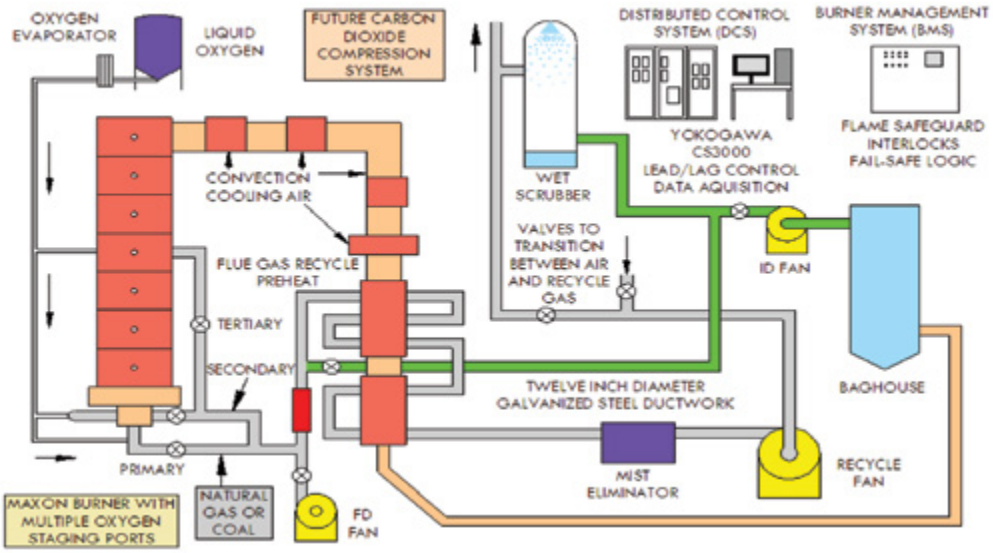

Figure 1: Diagram of the Modified CRF

The CRF was used to investigate the effects of coal type, firing staging, percentage of flue gas recycled, and O_2 purity on oxy-combustion.

In addition to flue gas recirculation, an advanced O_2 burner developed by Maxon was used to allow the flame shape and heat released to be controlled and to provide a stable attached flame. Figure 2 is an image of the flame produced by the oxy-combustion burner.

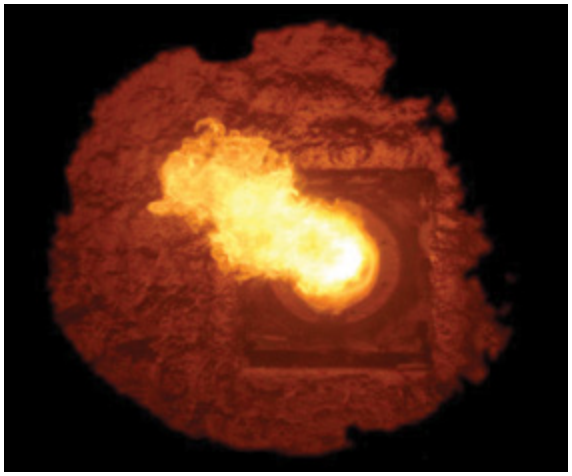

Figure 2: Image of Maxon Oxygen Burner Flame

A preliminary test was performed on the Maxon burner using Illinois Bituminous coal. The test chamber was heated to 2,400ºF with 3 percent excess O_2. Performance of the burner under air-fired conditions resulted in a nitrogen oxides (NO_x) emission rate of 0.3 to 0.4 lbs/MMBtu. However, oxy-combustion testing resulted in a lower emission rate of 0.16 to 0.18 lbs NO_x/MMBtu.

Reaction Engineering International (REI) updated a computational fluid dynamics (CFD) model of the CRF facility to predict oxy-combustion burner performance. The model describes temperatures, reaction rates, char burnout, and NO_x formation and/or destruction as a function of O_2 purity, stoichiometry, coal type, staging, furnace exit O_2 (FEO), and fuel processing. The model was validated by the CRF oxy-combustion experiments and can be utilized for any follow-on preliminary designs for project scale-up.

technology advantages

- The oxy-combustion burner is able to maintain a stable attached flame and can light off without natural-gas assist.
- The reduced volume of flue gas produced under oxy-combustion conditions should be less expensive to purify and compress for CO_2 sequestration than flue gas of a conventional air-fired, pulverized coal (PC) plant.
- For plants burning Powder River Basin (PRB) coal, recycling dry flue gas through the coal pulverizers should minimize concern of pulverizer fires.
- Oxy-combustion burners and flue gas recycle rate can be tuned to achieve low-cost operation (i.e., minimize recycle) and maximum heat transfer for a given boiler type and plant configuration.
- Advanced thermodynamic cycles can recover some of the energy penalty associated with air separation for new power plant applications.

R&D challenges

- Reduce cost of oxy-combustion retrofit for existing plants.
- Reduce energy penalty for O_2 production, which is approximately 25 percent for conventional cryogenic process.
- Address potential corrosion of low-temperature ductwork and equipment due to flue gas recycle.

results to date/accomplishments

- Completed the oxy-combustion and flue gas recycle retrofit of the CRF.
- Completed the update of the CFD model for oxy-combustion and flue gas recycle.
  - The CFD model was used to predict the flame geometry and temperatures in the CRF and make a comparison with the air-fired case.
  - The CFD model predictions were consistent with the experimental data in showing that the O_2-fired Maxon burner produced lower flame temperatures than the air-fired burner.
- Conducted oxy-combustion and flue gas recycle testing using the CRF.
  - The Maxon staged oxy-combustion burner produced a stable flame over a significant range of firing turndown, staging, and while firing five different U.S. coal types, including three eastern bituminous coals, a PRB sub-bituminous coal, and a western bituminous coal.
  - The parametric testing included extent of recycle and recycle turndown, FEO percentage, O_2 staging in the burner cup, burner quarl, secondary recycle, and overfire recycle. The load was also varied with and without changes in the amount of recycle flow.
  - The oxy-combustion burner produced lower flame temperatures than for air firing, which should enable safe operation, reduction of recycle flow without concern about furnace flame temperatures, and could be effective at reducing slagging and fouling in the boiler and super heater for full-scale applications.
  - The temperature/time profile was affected by four main factors: (1) the difference in load, (2) the difference in recycle flow back to the furnace and the absence of nitrogen (N_2) flow, (3) the difference in the Maxon oxy-burner design and an air-burner design, and (4) the difference in diffusivity of CO_2 and N_2.
  - Hydrochloric (HCl) acid concentration in the flue gas was consistent with the coal chlorine content and no buildup of HCl was observed via flue gas recirculation.
  - The sulfur dioxide (SO_2) concentration in the flue gas was consistent with the coal sulfur content and no buildup was observed via flue gas recirculation.
  - The carbon monoxide (CO) levels were also consistent with that of air firing, and the CO concentration had a significant correlation with only one parameter, that of FEO. Above 1.5 percent FEO, the CO concentration was around 50 parts per million by volume (ppmv); below 0.5 percent FEO, the CO concentration could reach hundreds of ppmv.
  - The relation of UBC in the ash with FEO was consistent with that of CO. The UBC in the ash increased with increased furnace staging similar to air firing.
  - NO_x emissions were high under baseline oxy-combustion conditions. However, NO_x emissions were dramatically reduced with staging of the O_2 in the secondary recycle gas and overfire-recycle flue gas.
  - The control system and retrofit concept allowed safe and controlled startup, changing of conditions, continuous operation without buildup of moisture, acid gases, pollutants, or other problems, and yielded efficient combustion of the coal and associated volatile gases.

next steps

The project ended on September 25, 2010.

available reports/technical papers/presentations

Gale, T. K., "Oxy-Fired CO_2 Recycle for Application to Direct CO_2 Capture from Coal-Fired Power Plants," presented at the 34th International Technical Conference on Coal Utilization & Fuel Systems, Clearwater, Florida, June 2009.

Gale, T. K., "Oxy-Fired CO_2 Recycle for Application to Direct CO_2 Capture from Coal-Fired Power Plants," presented at the Annual NETL CO_2 Capture Technology for Existing Plants R&D Meeting, Pittsburgh, Pennsylvania, March 2009. *http://www.netl.doe.gov/publications/proceedings/09/CO2/pdfs/42430%20SRI%20oxy-combustion%20%28Gale%29%20mar09.pdf*.

Gale, T. K., "Oxy-Fired Flue-Gas Recycle Pilot-Plant Demonstration," presented at the 14th Annual EUEC Conference, Phoenix, Arizona, February 2011. *http://www.netl.doe.gov/File%20Library/Research/Coal/ewr/co2/F8_4-Gale_EUEC-2011_Presentation.pdf*.

CANMETENERGY CO_2 R&D CONSORTIUM

primary project goals

The CanmetENERGY CO_2 R&D Consortium (Consortium) set out to conduct oxy-fuel combustion research and development (R&D) using a 0.3 MWth (1 million Btu/h) modular pilot-scale facility. The Consortium has completed nine successive phases of R&D that include oxy-fuel combustion, advanced power cycles, integrated multi-pollutant control, and carbon dioxide (CO_2) capture and compression technologies.

technical goals

The technical goal of the Consortium is to develop advanced energy conversion technologies with near-zero emissions for improved efficiency and commercial competitiveness for capture of CO_2 and air pollutants resulting from combustion of fossil fuels. One emphasis of the Consortium research program is the oxy-fuel combustion technology. Since combustion takes place in an oxygen (O_2)-enriched environment, the flue gas comprises mainly CO_2, water, and minor impurities. This CO_2-rich flue gas stream can then be purified, dried, and compressed for pipeline transport and use or permanent storage in geological formations. Oxy-fuel combustion also results in efficiency advances of high flame temperatures and reduced equipment sizes due to lower gas volume.

technical content

The Consortium activities in the past have included experimental investigations using coal; coal slurry; bitumen and natural gas to study the characteristics of oxy-fuel combustion; advanced near-zero emissions Brayton and Rankine cycles; solid oxide fuel cell modeling; multi-pollutant capture research for integrated removal of fine particulates, nitrogen oxide (NO_x), sulfur oxide (SO_x), and mercury (Hg); advanced oxy-fuel combustion processes and co-firing with opportunity fuels such as petroleum coke; system components and prototype design and pilot-scale testing; and modeling and development of new CO_2 capture and compression processes.

The latest completed Phase 9 of the Consortium's program included the development of a CO_2 capture and compression unit (CO_2CCU). This unit is capable of separating and compressing CO_2 from combustion flue gas streams for pipeline transport and storage. Part of this work involved the development of a CO_2 high-pressure test cell for studying CO_2 phase change, generating vapor-liquid equilibrium (VLE) data, and studying the impact of impurities in the flue gas stream on the capture processes. This has important practical applications relating to the CO_2 pipeline, material selection, and commercial design of these systems. Other ongoing R&D activities include the modeling of advanced supercritical oxy-coal plants with CO_2 capture; cost analysis; the development and testing of multi-pollutant control strategies, as well as testing in oxy-steam mode; and optimization of a novel multi-function oxy-fuel/steam burner.

Figure 1 shows the major process components comprising the 0.3 MWth oxy-fuel Vertical Combustor Research Facility (VCRF) integrated with the CO_2CCU. The overall pilot-scale research facility is used to develop pollutant control technologies that incorporate a fabric filter or electrostatic precipitator (ESP) for particulate capture, condensing heat exchangers and/or SO_x scrubbing to remove acid gases and oxidized Hg from the flue gas combustion stream.

technology maturity:

Pilot-Scale Research

project focus:

Engineering Assessment of Oxy-Combustion

participant:

Natural Resources Canada-CanmetENERGY

project number:

IEA-CANMET-CO_2

NETL project manager:

Timothy Fout
timothy.fout@netl.doe.gov

principal investigator:

Dr. Kourosh Zanganeh
Natural Resources Canada-CanmetENERGY
kourosh.zanganeh@nrcan.gc.ca

partners:

Phase 9 Consortium Members: Ontario Power Generation, SaskPower, Governments of Canada and Alberta, Babcock and Wilcox, U.S. Dept. of Energy, and the CO_2 Capture Project (CCP2)

performance period:

9/30/99 – 12/31/09

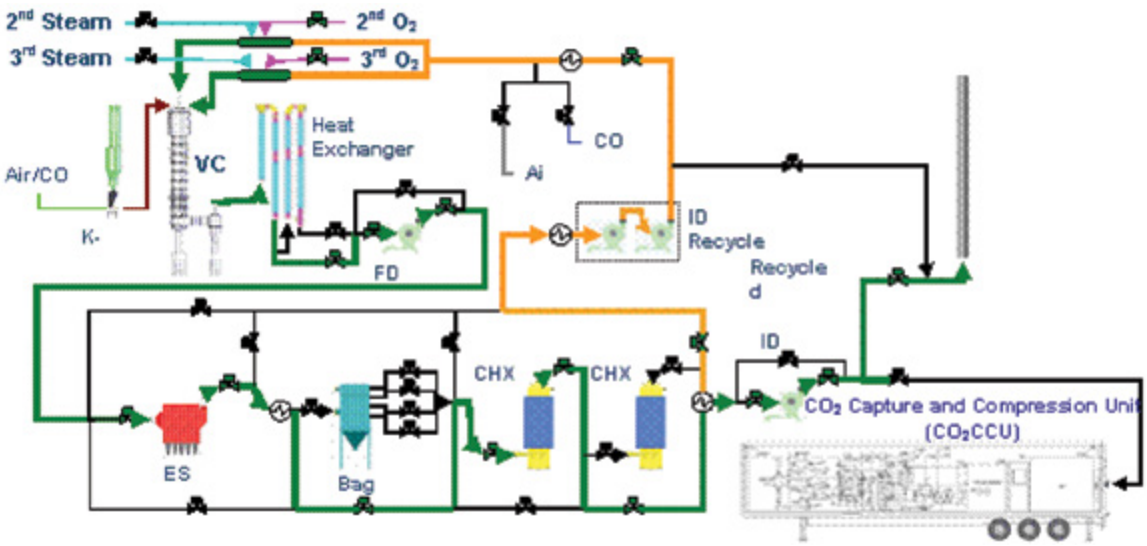

Figure 1: Schematic of the CanmetENERGY's Integrated Oxy-Fuel Vertical Combustor Research Facility

Figure 2 displays the pilot-scale CO_2CCU. The CO_2CCU is capable of processing CO_2 flue gas streams at a maximum rate of 160 Kg/hr with CO_2 concentrations of 50 percent or higher (in dry volume) to produce a CO_2 product stream with more than 95 percent purity.

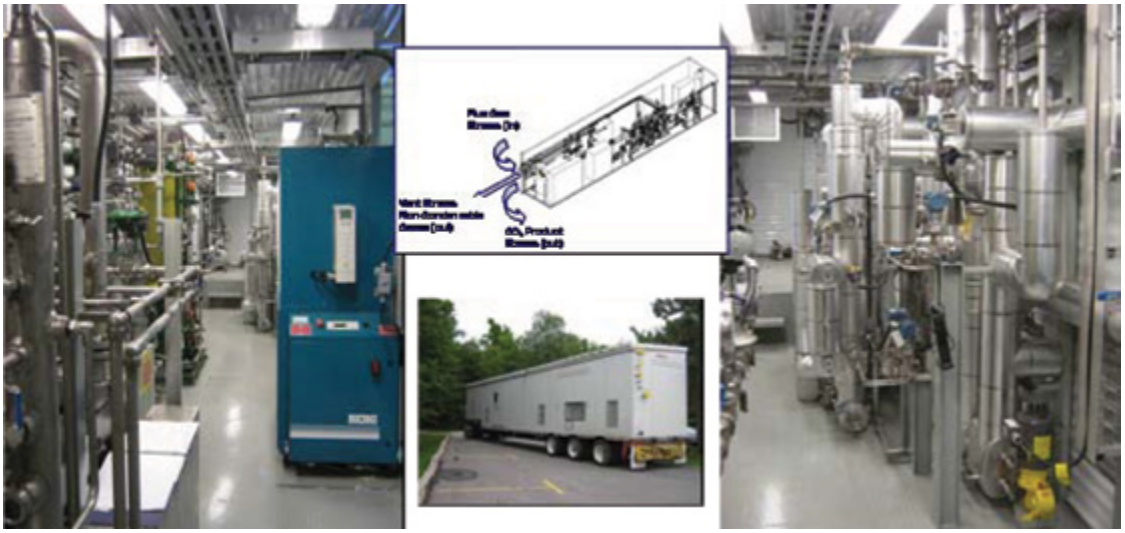

Figure 2: CanmetENERGY's CO_2 Capture and Compression Unit

The high-pressure CO_2 test cell and its high-pressure viewing chamber (HPVC) shown in Figure 3 were used to create supercritical CO_2 and study the CO_2 phase change in a controlled environment. The chamber can handle a maximum pressure of 200 atm and a temperature range of -60 to 150°C. There are two gas and liquid sample ports located at different heights and optical windows with a camera for observations inside the chamber to study the CO_2 liquid-gas interface.

Figure 3: CanmetENERGY's High-Pressure CO_2 Test Cell and Bench-Scale Facility

technology advantages

The program allows research to be carried out at a pilot scale small enough to reduce the overall R&D cost, while the experiments scale is sufficiently large enough to provide proof-of-concept before proceeding to a larger and more costly medium-scale pilot technology demonstration.

R&D challenges

- Integration and cycle development for O_2/flue gas recirculation (FGR), O_2 combustion, and hydroxy-fuel combustion of fossil fuels in different advanced cycles.
- Improving the understanding of combustion, heat transfer, and emissions in oxy-fuel combustion.
- Development of environmental multi-pollutant controls for NO_x, SO_x, Hg, and particulates.
- Minimizing energy demand for O_2 production while keeping the O_2 purity high.
- Decreasing energy consumption for capture and compression of CO_2.

results to date/accomplishments

- Developed new, ultra-low NO_x oxy-combustion burner and tested the prototype burners in VCRF with sub-bituminous and lignite coals.
- Determined that FE^{3+} salts were capable of oxidizing Hg and achieved a 75 percent Hg oxidation with an optimal pH between 1 and 3 on bench-scale tests.
- Increased the computational fluid dynamic (CFD) tools for model simulation of oxy-combustion flame characteristics.
- Created a CO_2 capture and compression process simulator and implemented a pilot-scale CO_2 capture research facility that has enhanced the program's CO_2 research capabilities.
- Developed new advanced gas turbine and high-efficiency fuel cell-based power generation cycles.
- Developed models of advanced supercritical oxy-coal plants with CO_2 capture and cost models for economic analysis.
- Developed and tested multi-pollutant control strategies and processes.
- Conducted testing in oxy-steam mode for pulverized coal and performed optimization of a novel multi-function oxy-fuel/steam burner.

next steps

This project ended on December 31, 2009.

available reports/technical papers/presentations

"Novel Oxy-Steam Burner for Zero-Emission Power Plants," 1st International Oxy-Fuel Combustion Conference, Cottbus, Germany, September 2009.

"Performance of an Advanced Pilot-Scale CO_2 Capture and Compression Unit," 1st International Oxyfuel Combustion Conference, Cottbus, Germany, September 2009.

"An Integrated Approach for Oxy-fuel Combustion with CO_2 Capture and Compression," 7th Annual Conference on CCS – May 5-8, 2008.

MULTI-POLLUTANT CONTROL THROUGH NOVEL APPROACHES TO OXYGEN-ENHANCED COMBUSTION

primary project goals

Washington University set out to perform experiments and modeling to develop best practices for implementing oxy-fuel combustion with flue gas recirculation and sorbent processes to minimize nitrogen oxides (NO_x), particulate matter (PM2.5), and mercury (Hg) emissions, while maximizing combustion efficiency.

technical goals

- Determine the influence of gas composition in the primary and secondary oxidizer streams on combustion temperature, flame stability, the formation of NO_x, and submicron particle formation during oxy-fuel combustion.
- Experimentally determine the optimum approach to mixing coal, oxygen (O_2), carbon dioxide (CO_2), and sorbents.
- Determine the effect of flue gas composition on electrostatic precipitator (ESP) performance for oxy-combustion.
- Evaluate the performance of non-carbon-based sorbents (nanostructured titanium dioxide [TiO_2] and potassium iodide) for mercury capture in coal combustion systems.

technical content

Oxy-combustion offers several advantages over traditional air-combustion technologies, including higher temperatures and smaller flue gas volume. However, in order to maintain the combustion temperatures at appropriate levels for existing materials, the reactants (fuel or O_2) must be diluted with recirculated flue gas. The flue gas can be added to the primary oxidizer (PO; i.e., the fuel stream), the secondary oxidizer (SO; i.e., the oxidizer stream), or some combination of both. Washington University researched the impact of flue gas placement on critical parameters such as flame temperature, NO_x formation, and particulate formation. Washington University also performed flame stability studies for oxy-combustion. The experiments used a 10- to 25-kW down-fired coal combustor consisting of a non-swirling PO and a swirling SO. The system was run under slight negative pressure and the PO preheat temperature was maintained between 300 and 350 °C.

Results from these studies showed that 30 mole percent O_2 is required when using CO_2 as the inert gas to obtain stability results similar to conventional coal air-combustion. Also, "inert exchange" flames (i.e., flames where the O_2 concentration was reduced in the PO stream and enriched in the SO stream) were shown to have improved flame stability when compared with conventional coal air-combustion despite the O_2 concentration in the PO being substantially reduced.

technology maturity:

Laboratory-Scale, 1.2 tonnes CO_2/day

project focus:

Multi-Pollutant Control

participant:

Washington University

project number:

FG26-05NT42531

NETL project manager:

Arun Bose
arun.bose@netl.doe.gov

principal investigator:

Richard L. Axelbaum
Washington University
axelbaum@wustl.edu

partners:

N/A

performance period:

8/29/05 – 2/28/09

technology advantages

Oxy-combustion can offer increased temperature, increased thermal efficiency, reduced pollutant emissions, reduced fuel consumption, and improved flame stability. Oxy-combustion, when coupled with appropriate burner designs, can reduce NO_x emissions beyond levels achieved by using overfire air and low-NO_x burners. Also, oxy-combustion with flue gas recirculation concentrates CO_2 levels, helping to reduce the cost of capture; concentrations up to 95 percent can be achieved.

R&D challenges

The flame structure of non-premixed systems is changed dramatically when oxy-combustion is used and depends on where the flue gas is added to control flame temperature.

results to date/accomplishments

- Developed an understanding of flame geometry and flame stability under oxy-fuel combustion.
- Developed a simple model that explains the presence of appreciable molecular O_2 at the location of peak temperature in oxy-fuel combustion.
- Obtained NO_x measurements as a function of gas composition in the PO and SO streams.
- Tested the performance of TiO_2 with UV irradiation for Hg capture in a bench- and pilot-scale system.
- Quantified flame stability in a Type I laboratory-scale pulverized coal combustor as a function of inert gas type and O_2 concentration in both the PO and SO streams.
- Developed a model of soot inception limits under oxy-fuel combustion conditions and validated with gaseous fuels.
- Evaluated the performance of an ESP under flue gas conditions associated with oxy-combustion.
- Completed a study of blow-off limits in oxy-coal combustion.
- Demonstrated that the approach used to mixing the oxy-coal flame can lead to stronger flames even with reduced O_2 in the primary region.

next steps

This project ended on February 28, 2009.

available reports/technical papers/presentations

Axelbaum, R.L., “Multi-pollutant Control Through Novel Approaches to Oxygen Enhanced Combustion,” Final Technical Report, December 2009.

Skeen, S.A.; Kumfer, B.M.; and Axelbaum, R.L. “Nitric oxide emissions during coal and coal/biomass combustion under air-fired and oxy-fuel conditions,” Energy & Fuels, 24(8), 4144-4152, 2010.

Suriyawong, A.; Chen, X.; and Biswas, P. “Nano-Structured Sorbent Injection Strategies for Heavy Metal Capture in Combustion Exhausts,” Aerosol Science and Technology, 44(8): 676-691 (2010).

Skeen, S.A.; Yablonsky, G.; and Axelbaum, R.L. “Characteristics of non-premixed oxygen-enhanced combustion: II. Flame structure effects on soot precursor kinetics resulting in soot-free flames,” Combustion and Flame, 157(9), 1745-1752, 2010.

Skeen, S.A.; Yablonsky, G.; and Axelbaum, R.L. “Characteristics of non-premixed oxygen-enhanced combustion: I. The presence of appreciable oxygen at the location of maximum temperature,” Combustion and Flame, 156(11), 2145-2152, 2009.

Li, Y.; Suriyawong, A.; Daukoru, M.; Zhuang, Y.; and Biswas, P. "Measurement and Capture of Fine and Ultrafine Particles from a Pilot-Scale Pulverized Coal Combustor with an Electrostatic Precipitator," Journal of the Air & Waste Management Association, 59(5): 553-559 (2009).

Suriyawong, A.; Smallwood, M.; Li, Y.; Zhuang, Y.; and Biswas, P. "Mercury Capture by Nano-structured Titanium Dioxide Sorbent during Coal Combustion: Lab-scale to Pilot-scale Studies," Aerosol and Air Quality Research, 9(4): 394-403 (2009).

Kumfer, B.M.; Skeen, S.A.; and Axelbaum, R.L. "Soot inception limits in laminar diffusion flames with application to oxy-fuel combustion," Combustion and Flame, 154(3), 546-556, 2008.

Suriyawong, A.; Gamble, M.; Lee, M.H.; Axelbaum, R.; and Biswas, P. "Submicrometer particle formation and mercury speciation under O_2-CO_2 coal combustion," Energy & Fuels, 20(6), 2357-2363, 2006.

A MECHANISTIC INVESTIGATION OF NITROGEN EVOLUTION AND CORROSION WITH OXY-COMBUSTION

technology maturity:

Pilot-Scale Using Simulated Flue Gas, 0/05 Tonnes CO_2/day

project focus:

Nitrogen behavior in Oxy-Combustion

participant:

Brigham Young University

project number:

FG26-05NT42530

NETL project manager:

Arun C. Bose
arun.bose@netl.doe.gov

principal investigator:

Dale R. Tree
Brigham Young University
treed@byu.edu

partners:

Air Liquide

performance period:

8/4/05 – 12/31/08

primary project goals

Brigham Young University (BYU) set out to investigate the evolution of nitrogen from its origin in coal to emissions in both air- and oxy-combustion. In addition, BYU also set out to develop a model of detailed kinetics, devolatilization, and char oxidation in a simple plug flow to interpret the data.

technical goals

- Modify the flat flame burner (FFB) to run using simulated oxy-fuel combustion.
- Modify the multi-fuel flow reactor (MFR) to run with simulated oxy-fuel combustion.
- Gather data through experimental measurements of gas species in air-fired and oxy-fuel pulverized coal flames.
- Develop a computational model of the combustion process, including fuel devolatilization, gas phase kinetic mechanisms, and char oxidation.

technical content

The experiments were performed at two facilities designed to investigate the evolution of coal nitrogen species, fuel nitrogen oxide (NO_x) formation, and emissions during combustion processes in air and oxygen (O_2)/carbon dioxide (CO_2) mixtures. A model of detailed kinetics, devolatilization, and char oxidation in a plug flow operation was developed and used to interpret the data collected.

In the experiments performed by BYU, the flue gas was not recycled. Rather, bottled CO_2 was used to simulate dry recycled flue gas. While the results are applicable to entrained-flow pulverized coal combustion in general, the absence of turbulence in the laminar flow experiment is a notable difference from any practical combustor.

Pulverized coal was burned in a refractory-lined, laminar flow reactor referred to as the MFR, shown in Figure 1.

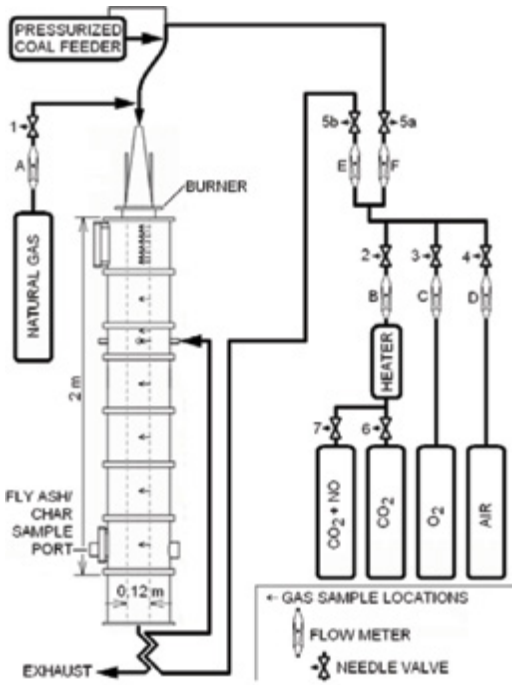

Figure 1: Schematic of the Multi-Fuel Flow Reactor

The unit at the first facility was a premixed, down-fired staged reactor where the first stage was fuel-rich followed by a burnout oxidizer stage. The oxidizer was varied from air (23% O_2 by mass in nitrogen [N_2]) to two different mixtures of O_2 and CO_2 (25 and 30% O_2 by mass). The coals used were Pittsburgh #8, Illinois #6, and Powder River Basin (PRB). Selected coal properties are shown in Figure 2.

	Sub-bituminous	Illinois #6	Pittsburgh #8
Proximate Analysis	**DAF wt%**	**DAF wt%**	**DAF wt%**
Volatile Matter	49.72	44.17	41.96
Fixed Carbon	50.28	55.83	58.04
Ash (wt%, dry)	6.42	9.31	10.67
Higher Heating Value (Btu/lb, DAF)	11981	14226	14785
ASTM Rank	Sub-bituminous A	High-volatile C bituminous	High-volatile A bituminous
Ultimate Analysis	**DAF wt%**	**DAF wt%**	**DAF wt%**
C	70.56	81.88	85.19
H	4.18	4.37	4.87
O	23.63	7.83	4.70
N	1.04	1.27	1.38
S	0.59	4.64	3.86
	100	100	100

Figure 2: Selected Properties of the Coals

Both the air and mixture cases produced a rapid initial formation of nitric oxide (NO), with a similar amount of total fuel nitrogen converted to NO. In air combustion, NO can be either formed or reduced by thermal equilibrium forces dependent on the local equivalence ratio. At an initial or primary zone stoichiometric ratio (SR) of 0.82, air combustion appeared to produce thermal NO; while at an SR of 0.65, no evidence of thermal NO is seen. In oxy-combustion, initial NO formation produced concentrations above equilibrium, creating a situation where NO was being destroyed by thermal processes at all measured SR.

There is competition between the NO destruction in the fuel-rich region and the NO formation at tertiary air injection, which creates an effluent out of NO minimum for each oxidizer. The magnitude of the minimum was similar for air- and oxy-fuel combustion; however, the SR at the minimum was higher for oxy-fuel combustion, suggesting that oxy-fuel combustion does not require as deep of a staging environment to achieve NO_x reduction and can therefore achieve higher burnout.

The second facility included an FFB with particle and gas sampling. Char particles were sampled after passing through either air- or oxy-flames. In oxy-flames, the normal diluents of N_2 were replaced with CO_2. The ratio of O_2/CO_2 was varied in order to produce different flame temperatures. There was little difference observed between air- and oxy-fuel pyrolysis of coals.

The probe, shown in Figure 3, was used to sample gas in the reactor.

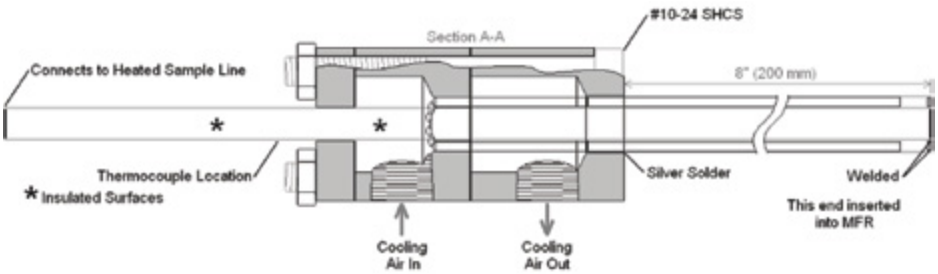

Figure 3: Diagram of the Air-Cooled Gas Sampling Probe

In unstaged, premixed combustion, air- and oxy-fuel combustion produced similar levels of fuel nitrogen conversion to NO_x. Low-NO_x emissions from oxy-fuel combustion are therefore not achieved without staged mixing of the oxidizer and fuel, as is the case for conventional air combustion.

technology advantages

The research will supply information that will significantly aid in the development of oxy-combustion technology.

R&D challenges

Due to the use of bottled CO_2 to simulate dry recycled flue gas, there was an absence of turbulence in the laminar flow experiment, which creates a notable difference from any practical combustor. This could possibly lead to difficulties when scaling to a commercial plant.

results to date/accomplishments

- Modified the FFB to run using simulated oxy-fuel combustion.
- Modified the MFR to run with simulated oxy-fuel combustion.
- Completed air- and oxy-combustion NO_x profiles with 500 parts per million (ppm) NO added to the reactants to determine the extent of reburning in oxy-combustion.
- Completed a staged combustion experiment of NO_x and major gas species profiles in the MFR.
- Produced a full kinetic mechanism model of oxy-fuel combustion.

next steps

This project ended on December 31, 2008.

available reports/technical papers/presentations

Mackrory, A. J., and Tree, D. R., "Measurement of Nitrogen Evolution in a Staged Oxy-Combustion Coal Flame," Fuel, 93 pp 298-304, 2012.

Mackrory, A. J., and Tree, D. R., "Predictions of NO_x in a Laboratory Pulverized Coal Combustor Operating under Air and Oxy-Fuel Conditions," Combustion Science and Technology, 181: 11, 1413 – 1430, 2009.

Asay, B. W. (1982) "Effects of Coal Type and Moisture Content on Burnout and Nitrogeneous Pollutant Formation," Ph.D. Dissertation, Brigham Young University, Provo, Utah.

Bose, A. C.; Dannecker, K. M.; and Wendt, J. O. L., "Coal Composition Effects on Mechanisms Governing the Destruction of NO and Other Nitrogenous Species during Fuel-Rich Combustion," Energy and Fuels 2:301-308, 1988.

APPENDIX B: CARBON DIOXIDE CAPTURE TECHNOLOGY SHEETS

OXYGEN PRODUCTION

ITM OXYGEN TECHNOLOGY FOR INTEGRATION IN IGCC AND OTHER ADVANCED POWER GENERATION SYSTEMS

primary project goals

Air Products and Chemicals set out to design and develop an ion transport membrane (ITM) based on ceramics that selectively transport oxygen (O_2) ions when operated at high temperature. This high-temperature process may be integrated with advanced power generation processes that require O_2 as a feedstock, such as integrated gasification combined cycle (IGCC) and other clean energy and industrial applications.

technical goals

- Design, construct, and operate a 0.1-ton/day (TPD) technology development unit (TDU) to validate the ITM technology concept, verify the technology prospects for stand-alone O_2 production plants, and integrate with IGCC and other advanced power generation systems.
- Design and construct a 5-TPD Sub-Scale Engineering Prototype (SEP) facility and produce greater than 95 percent O_2 purity.
- Increase the scale of the engineering test facility from 5 TPD of O_2 to 100 TPD of O_2 in an intermediate-scale test unit (ISTU).
- Develop the manufacturing capability needed to support ITM technology commercialization.
- Develop preliminary design concepts for a 2,000-TPD ITM O_2 production plant.

technical content

Air Products and Chemicals set out to design a ceramic ITM that, under high temperatures, separates O_2 from nitrogen (N_2). These non-porous, multi-component metallic oxides have high O_2 flux and selectivity (100%), resulting in high-capacity production of high-purity O_2 at low cost. Figure 1 illustrates the concept of the ITM.

technology maturity:

Prototype, 5 Tons Oxygen Produced/Day

project focus:

ITM O_2 Technology

participant:

Air Products and Chemicals

project number:

FC26-98FT40343

NETL project manager:

Susan Maley
susan.maley@netl.doe.gov

principal investigator:

Douglas L. Bennett
Air Products and Chemicals
bennetdl@apci.com

partners:

Becht Engineering
Ceramatec
Concept NREC
Eltron Research
EPRI
GE-Chevron-Texaco
NovelEdge Technologies
Pennsylvania State University
Siemens Power Group
SofCo
University of Pennsylvania
Williams International

performance period:

10/1/98 – 9/30/15

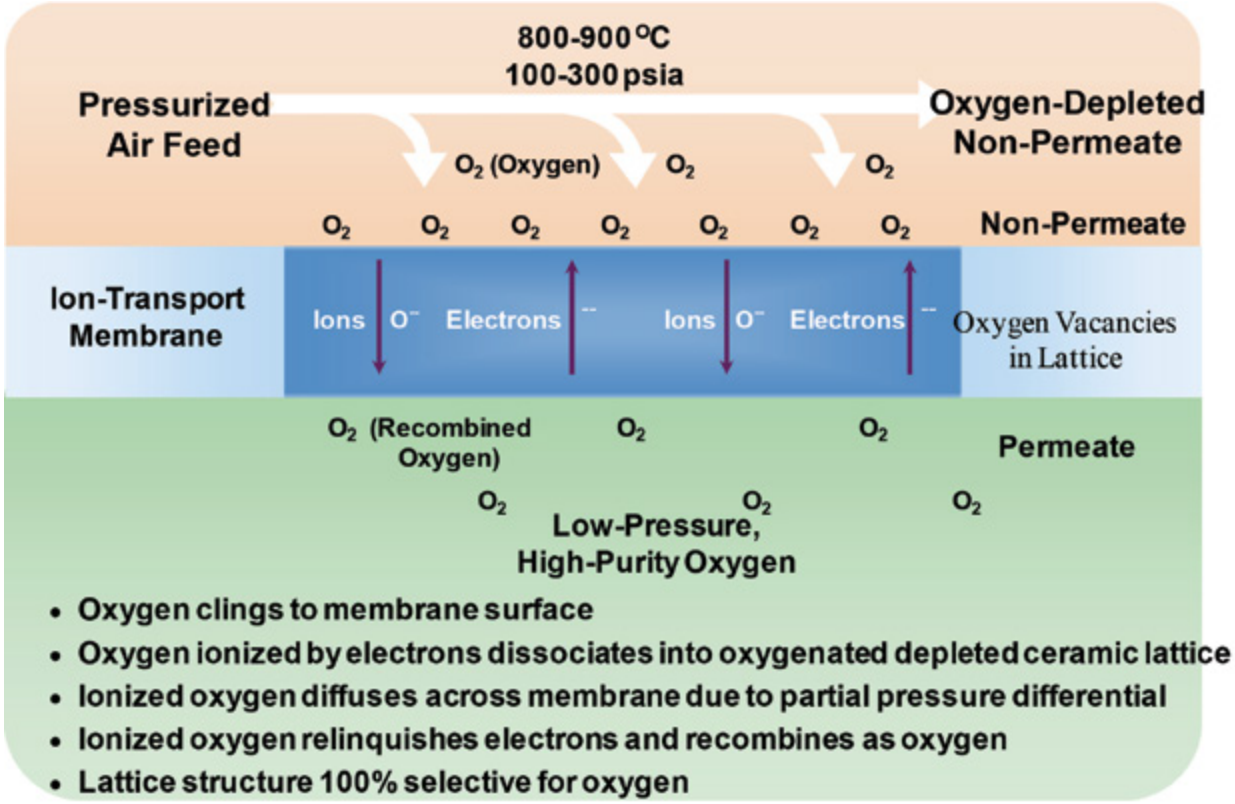

Figure 1: Conceptual Schematic of ITM O_2 Technology

The membrane employs a ceramic planar wafer architecture that incorporates a non-porous ITM on supporting porous and slotted layers that typically operate between 800 and 900°C. The driving force for O_2 separation is determined by the relative O_2 partial pressure gradient across the membrane. Therefore, air is typically supplied at pressures of 7 to 20 atm, while the product O_2 pressure is typically below ambient (≈1 atm). Figure 2 shows a cutaway view of part of a wafer. The wafer consists of two thin outer membrane layers through which the oxygen ions diffuse. The thin layers on the top and bottom of the wafer are supported by a porous layer, which is itself supported by a slotted layer. High-temperature, high-pressure air flows over the membrane surface exterior to the wafer. Oxygen passes from the air outside each wafer through the thin outer membrane layer, through the pores of the porous layer and into the slots of the innermost layer, where it is collected. In a typical membrane module, stacks of wafers are joined together, separated by a spacer ring to form a gap for air flow between the wafers. The oxygen is collected in a central region of the module formed by the open center of each wafer and the spacer rings and passes out of the module through a ceramic tube sealed to a metal pipe. The high-pressure air on both sides of each wafer creates compressive stresses within the ceramic, which stabilize the wafer. The planar design also makes for a very compact separation device, while facilitating good gas phase mass transfer. All of the layers are made of the same ceramic material, and therefore expand and contract together during temperature changes.

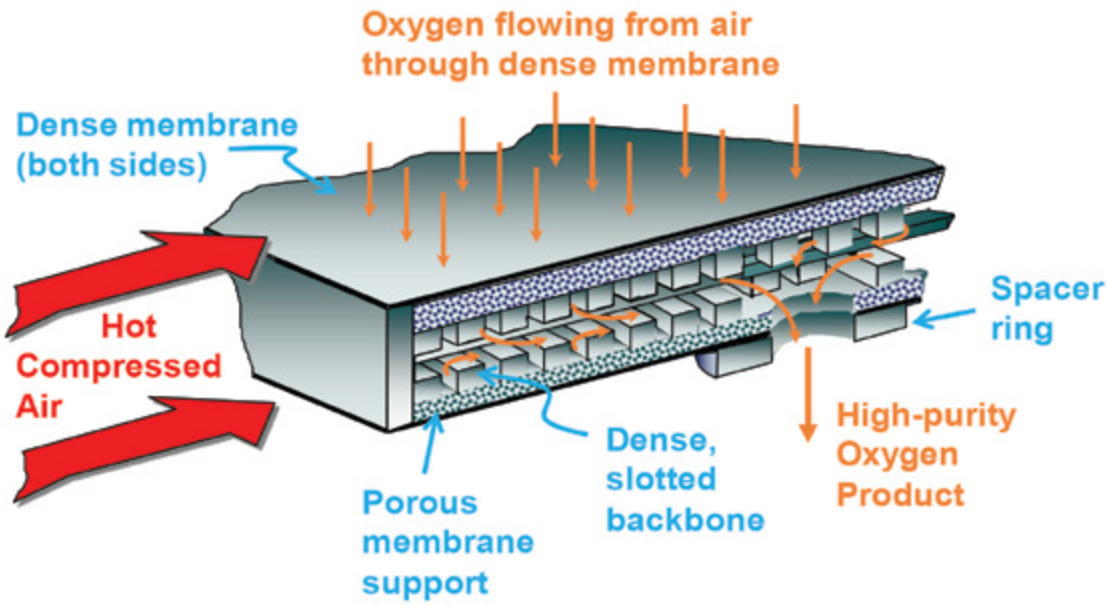

Figure 2: A Portion of an ITM Planar Membrane Wafer Shown in Cutaway View

Figure 3 shows a schematic diagram of an ITM O_2 production plant that includes both indirect and direct heating of the pressurized feed air in order to satisfy the heating requirement of the thermally activated transport mechanism. While not shown in the schematic, the resulting hot, pressurized, non-permeate stream can be recovered if combined with a gas turbine power generation system.

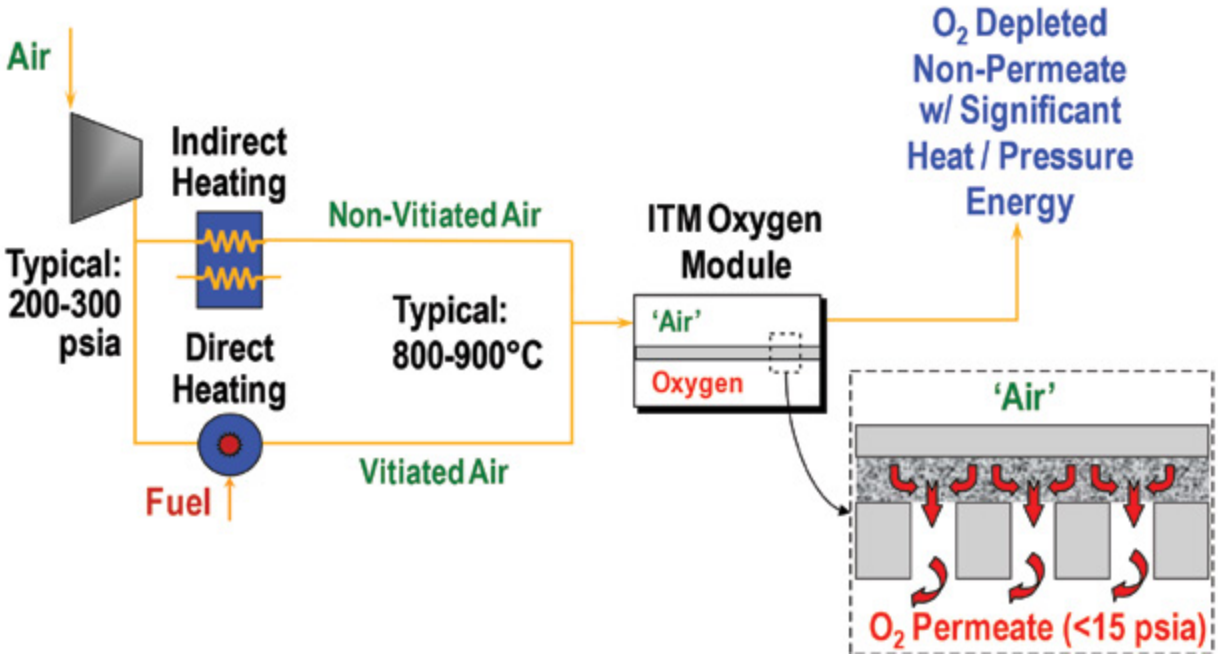

Figure 3: Diagram of O_2 Production Plant

An ITM O_2 plant is projected to decrease the installed capital cost of air separation equipment by more than one-third and the installed capital cost of an IGCC facility by 7 percent, while improving efficiency and reducing the power requirement for air separation by approximately 35 percent. These increases in efficiency and reductions in cost, along with the near-capture ready concentrations of CO_2 in the waste stream, make ITM a technology that may be capable of making CO_2 capture more economically feasible.

technology advantages

- This technology is capable of producing greater than 95% O_2 at high flux rates.
- It is resistant to structural damage and provides consistent performance during thermal and hydraulic cycling.
- It offers low capital and operating costs, improves efficiency and reduces the power requirement for air separation by approximately 35% relative to cryogenic separation, and reduces capital cost of an IGCC facility by 7%.

R&D challenges

Scale-up from 5 TPD to 100 TPD to 2,000 TPD, and obtaining flux rates competitive to other available technologies.

results to date/accomplishments

- Developed a stable, high-flux material; demonstrated stable operation in the 0.1-TPD TDU.
- Demonstrated the commercial flux target under anticipated commercial operating conditions.
- Devised a planar ITM architecture.
- Scaled-up and produced commercial-size wafers in large quantities.
- Built first commercial-scale ITM oxygen modules.
- Completed detailed design, construction, and testing of SEP vessel capable of housing full-size ITM oxygen modules to produce an estimated 5 TPD of 95% pure oxygen at full commercial conditions of 200 to 300 pounds per square inch gauge (psig) and 800 to 900 °C.
- Completed sub-scale wafer flux evaluation studies with feed air impurities and determined the effect of potential impurities on the cost and engineering performance of ITM systems.
- Implemented patented advanced process control techniques during heating and cooling to improve module reliability at the SEP.
- Completed the 100 TPD module conceptual design by including major elements of a commercial ITM oxygen facility.
- The 5 TPD SEP was operated for more than 18,000 hours, commercial flux targets were achieved or surpassed, and product purity exceeded 99%.
- Developed and selected a supported getter material that will remove gas phase chromium species upstream of the ITM modules.
- Temperature Swing Adsorption (TSA) system has been fabricated.
- Mechanical, electrical, and insulating work for the ISTU pilot-scale unit construction has been completed.
- Two 0.5-TPD ITM modules were successfully tested in the SEP utilizing a prototype flow duct design. The flow duct design will be scaled-up to support 1-TPD ITM module operation and fabrication.
- Completed construction of major equipment items for the 5-TPD SEP facility for testing full-size ITM modules for producing 1 to 5 TPD of O_2 at 95% purity.
- Tested full-size ITM Oxygen modules in the SEP facility and produced O_2 near 95% purity and generated process information for further scale-up to the ISTU.

next steps

- Establish design basis scale-up of the ITM process for energy and other industrial applications.
- Operate the ISTU and the ceramic fabrication facility to support scale-up of the technology.

available reports/technical papers/presentations

Repasky, J. M.; Anderson, L. L.; Stein, V. E.; Armstrong, P. A.; and Foster, E. P., "ITM Oxygen technology: scale-up toward clean energy applications," presented at International Coal Conference 2012, Pittsburgh, Pennsylvania, October 2012.

Anderson, L. L.; Armstrong, P. A.; Repasky, J. M.; and Stein, V. E., "Enabling Clean Coal Power Generation: ITM Oxygen Technology," presented at International Coal Conference 2011, Pittsburgh, Pennsylvania, September 2011.

Armstrong, P. A., and Foster, E. P. "ITM Oxygen for Gasification," presented at International Thermal Operations and Heavy Oil Symposium November 2005, Calgary, Alberta. Canada.

Dyer, P.N.; Richards, R.E.; Russek, S.L.; and Taylor, D.M., "Ion Transport Membrane Technology for Oxygen Separation and Syngas Production," Solid State Ionics, 134 (2000) 21-33.

DEVELOPMENT OF NANOFILLER-MODULATED POLYMERIC OXYGEN ENRICHMENT MEMBRANES FOR REDUCTION OF NITROGEN OXIDES IN COAL COMBUSTION

primary project goals

North Carolina A&T State University (NCATSU) set out to design and develop a nano-filler-modulated polymer membrane for the oxygen (O_2)-enrichment of coal combustion and gasification applications that would reduce the volume of waste gas and increase the concentration of near-capture ready carbon dioxide (CO_2) within the waste gas to simplify capture and reduce related costs.

technical goals

- Research and select polymer candidates, as well as functional nanofillers.
- Experiment with the selected nanofiller-modulated polymers and document the fundamental microstructure-property relationships.
- Develop models for selected membranes using Material Studio 4.0 and Groningen Machine for Chemical Simulation (GROMACS) 3.3.

technical content

NCATSU researched membrane technology capable of separating O_2 from nitrogen (N_2). The selected membranes had to be capable of producing a sufficient volume of high-purity O_2 at reasonable operational and capital costs. The primary method of research used to develop a membrane with the required traits has been to vary the amount and type of filler, the type of polymer backbone, and the method of distribution and casting used. The results are used to develop computational models to further study and develop the technology. The membranes evaluated include single-walled carbon nanotube, nanofumed silica polydimethylsiloxane (PDMS), and zeolite-modulated polyimide (a polymer) membranes.

The polyimide selected was Matrimid 5218, due to its high glass transition temperature, high structural and thermal stability, and low cost. For example, a mixed-matrix membrane utilizing Matrimid 5218 as the polyimide backbone and a zeolite as the filler was fabricated on a porous stainless steel substrate. This membrane was exposed to pure N_2 and pure O_2 at 3.4 atm (50 pounds per square inch [psi]) for two hours. The resulting permeability was 0.114 Barrer and 0.380 Barrer, respectively, with a selectivity for O_2 of 3.33. After 12 hours, the results improved to a permeability of 0.093 for N_2 and 0.460 for O_2, with a selectivity for O_2 of 4.95. While the results are still below required values, they show considerable potential that a mixed-matrix polyimide membrane with zeolite nanofiller could meet the requirements necessary for commercial application in the future.

technology maturity:
Laboratory-Scale

project focus:
Nanofiller Oxygen Membranes

participant:
North Carolina A&T State University

project number:
FG26-06NT42742

NETL project manager:
Timothy Fout
timothy.fout@netl.doe.gov

principal investigator:
Jianzhong Lou
North Carolina A&T State University
lou@ncat.edu

partners:
American Air Liquide
Babcock & Wilcox Co.
Battelle Memorial Institute

performance period:
2/17/06 – 12/31/10

As for nanofumed silica PDMS membranes, the fumed silica chosen was CAB-O-SIL TS-530. The hydrophobic silica was chosen because it had greater potential for proper mixing with the elastomer. However, the fumed silica did not produce good dispersion in the polymer, resulting in limited success. The O_2 selectivity observed for 1 and 2.5 percent fumed-silica at 4.1 atm (60 psi) was 2.72 and 2.81, respectively. When compared to an O_2 selectivity of 2.54 for pure PDMS, it is apparent that little improvement was achieved through the use of the fumed silica.

Lastly, molecular dynamics simulations have been conducted to calculate the theoretical O_2 molecular diffusion coefficient and N_2 molecular coefficient inside single-walled carbon nanotube PDMS membranes in order to predict the effect of the nanotubes on the gas-separation permeability. A simulated model of these membranes is shown in Figure 1.

The selectivity achieved from experimentation is 0.86 for PDMS filled with single-walled carbon nanotubes. When compared to pure PDMS, with a selectivity of 1.97, it is apparent that this filler is not appropriate for the purpose of this project.

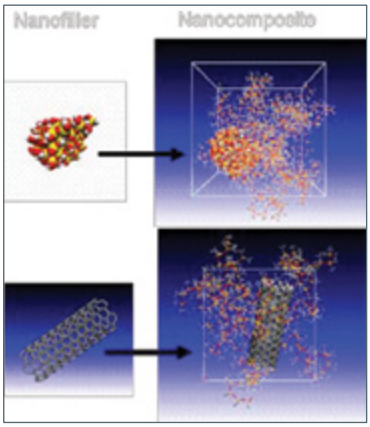

Figure 1: Model of Naofumed Silica (above) and Single-Walled Carbon Nanotube PDMS Membranes

technology advantages

- The membranes researched have several desirable properties, including high glass transition temperatures, high thermal and structural stability, high permeability (0.460 Barrers), and high selectivity (4.95).
- Capital costs are low due to the absence of precious metals found in many other membrane technologies.

R&D challenges

- The experiments performed have shown that the nanofillers and polymers used have unstable properties over extended periods of time.
- It was found that fumed silica did not produce good dispersion in the polymers tested.
- Insufficient permeability and selectivity for O_2.

results to date/accomplishments

- Performed permeation and diffusion experiments using polymers with nanosilica particles, nanotubes, and zeolites as fillers.
- Studied the influence of nanofillers on the self diffusion, free volume, glass transition, O_2 diffusion and solubility, and perm-selectivity of O_2 in polymer membranes.
- Developed molecular models of single-walled carbon nanotube and nanofumed silica PDMS membranes, as well as zeolites-modulated polyimide membranes.

next steps

This project ended on December 31, 2010.

available reports/technical papers/presentations

Zhang, J.; Lou, J.; Ilias, S.; Krishnamachari, P.; and Yan, J., "Thermal properties of poly(lacticacid) fumed silica nanocomposites: Experiments and molecular dynamics simulations," Polymer, 2008, 49, 2381-2386.

Zhang, J.; Liang, Y.; Yan, J.; and Lou, J., "Study of molecular weight dependence of glass transition temperature for amorphous poly(l-lactide) by molecular dynamics simulation," Polymer, 2007, 48, 4900-4905.

Vu, D. Q.; Koros, W. J.; and Miller, S. J., "Mixed matrix membranes using carbon molecular sieves: I. Preparation and experimental results," Journal of Membrane Science 2003, 211 (2), 311-334.

NOVEL SUPPORTS AND MATERIALS FOR OXYGEN SEPARATION AND SUPPLY

primary project goals

Eltron Research set out to design and develop a temperature swing adsorption (TSA) system capable of producing high purity (>99%) oxygen (O_2) for use as an air substitute in power plants, reducing waste gas volume and simplifying carbon dioxide (CO_2) capture and containment.

technical goals

- Produce materials which provide more O_2/m^3*hr than the zeolites currently used in small to mid-size TSA O_2 separation technologies (23 kg O_2/m^3*hr).
- Develop materials capable of producing an O_2 with purity comparable to cryogenic O_2 separation (>99%).

technical content

Eltron Research set out to develop a TSA system that is capable of producing O_2 at purities comparable to those produced by cryogenic methods, but at reduced cost.

This program initially focused on the coating of sintered metal fiber filters (SMFFs) with cerium oxide (CeO_2), silicon oxide (SiO_2), and/or aluminum oxide (Al_2O_3). These base-coated fibers were then separately impregnated using a mixed metal oxide nitrate. The SMFFs used were chosen for their high porosity (80%) and permeability (1,500 L/dm*min), which provided a near-negligible post-reactor pressure drop. Also, due to their high thermal conductivity, the chosen SMFFs had significantly reduced thermal irregularities compared to ceramic monoliths. This feature resulted in near isothermal reactor beds. Cerium- (Ce), silicon- (Si), and aluminum- (Al) based oxides were chosen as base-coating materials for their ability to increase surface area and provide a more ideal binding surface on the SMFFs. Additionally, they also prevent or dramatically decrease agglomeration and its impact on the overall O_2 storage and release capability of the materials. However, based upon an economic analysis, it was determined that the volume needed for the SMFFs was too large, and so the program was then re-focused strictly on fixed beds with no SMFF supports. In addition, the focus was changed from co-precipitated mixed metal oxide materials to perovskite materials produced using ceramic processing methods.

Twelve combinations of materials were selected and produced via ceramic processing methods and calcined at high temperatures (>900°C). Upon testing, results showed that one of the selected materials (K-12), a perovskite, was capable of producing >132 kg O_2/m^3*hr, far surpassing the original mixed metal oxide primary material produced via co-precipitation from nitrate solutions.

Figure 1 compares the O_2 production rates of several leading technologies, including Eltron's primary materials. Figure 2 compares the required reactor volume, based on a 5 ton-per-day (tpd) O_2 system. As indicated, the K-12 sorbent offers significantly improved O_2 production over existing pressure swing adsorption (PSA) zeolite-based sorbents. Utilizing a sorbent capable of such high production rates may significantly reduce the required reactor volume, leading to reduced capital and operational costs.

technology maturity:

Laboratory-Scale,
5-10 lb oxygen/day

project focus:

Materials for Oxygen Separation

participant:

Eltron Research

project number:

FG02-07ER84600.002

NETL project manager:

Arun Bose
arun.bose@netl.doe.gov

principal investigator:

Erick Schutte
Eltron Research
eschutte@eltronresearch.com

partners:

none

performance period:

8/8/07 – 8/7/10

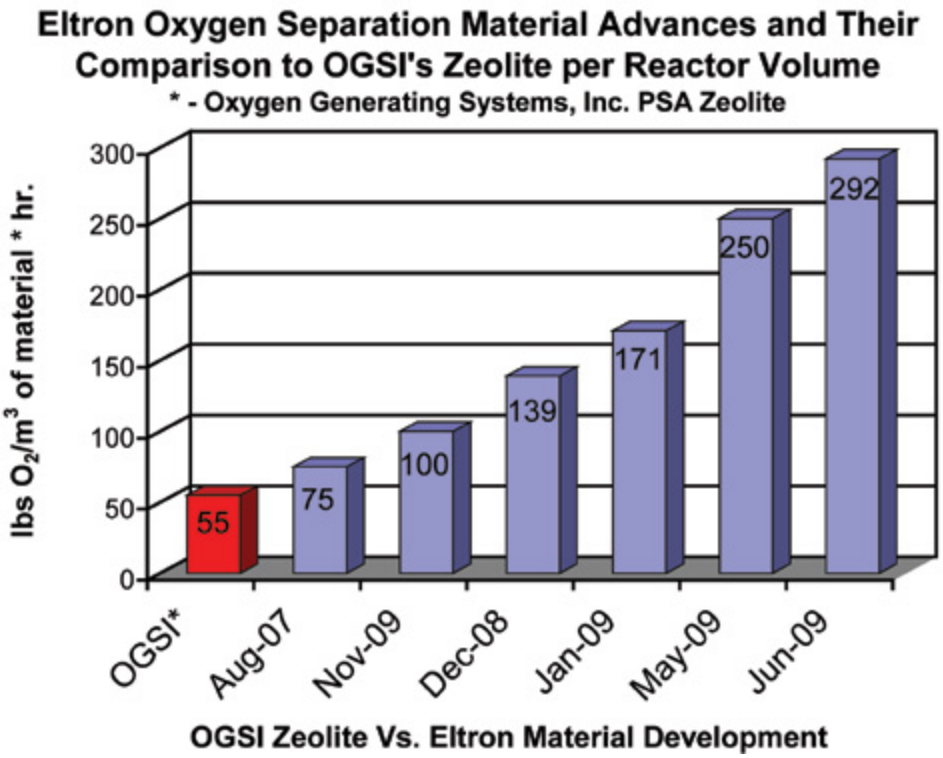

Figure 1: Oxygen Production Comparison

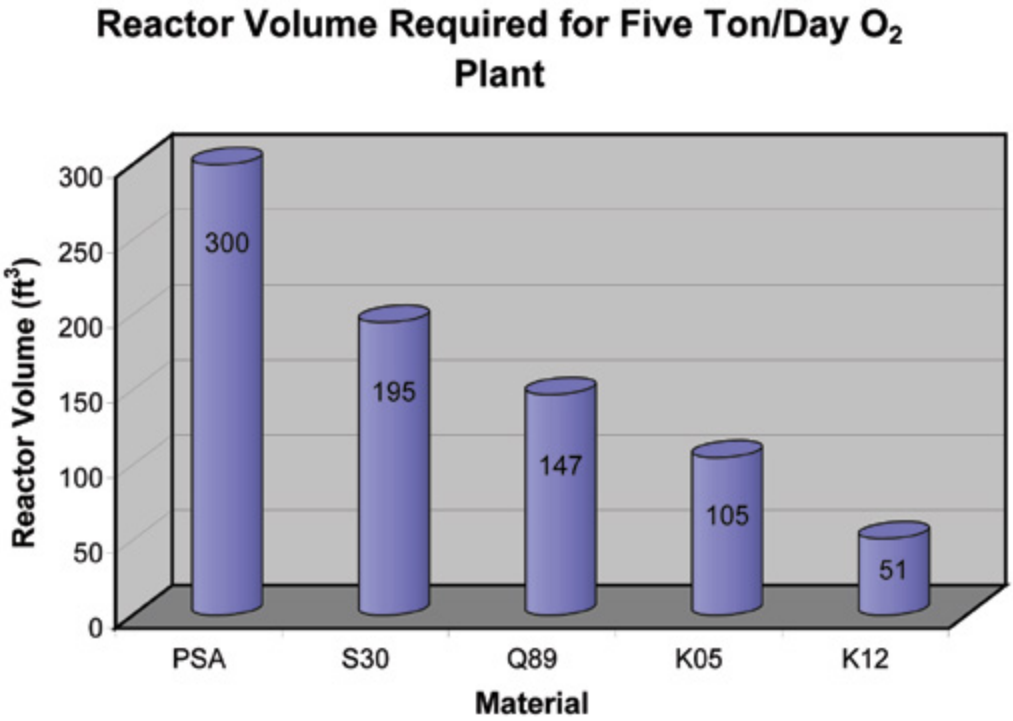

Figure 2: Required Reactor Volume Comparison

technology advantages

Materials being researched have superior mechanical strength, durability, and thermal resistance when compared to current TSA materials. They have the capability of producing O_2 at >99 percent purity, industrially relevant volumes, and at significantly reduced cost in comparison to cryogenic methods.

R&D challenges

- Heating issues (i.e., how to most effectively heat large amounts of material; how to heat and cool a large amount of material fast; how to make sure heating is even; etc.).
- Scale-up – The central focus of the technology was to compete with cryogenic separation on large scale (>1,000 tpd); however, initial development leaned towards competing with current small-scale PSA systems (1 lb – 1,000 tpd), which require additional processes to achieve high O_2 purity >95 percent.

results to date/accomplishments

- Developed a new primary material (K-12) which yields >132 kg O_2/m^3*hr.
- Observed that air flow during calcination is crucial to phase formation.
- Adding polyvinyl butyral (PVB) binder to calcined K-12, pelletizing, and re-firing at calcination temperatures yields a material which produced >130 kg O_2/m^3*hr with no drop-off in performance (>16,000 cycles).

next steps

- This project ended on August 7, 2010.
- Engage industrial partner for scale-up and commercialization push.

available reports/technical papers/presentations

N/A.

SORBENTS FOR AIR SEPARATION

primary project goals

TDA Research set out to design and develop a new regenerable chemical sorbent to selectively remove oxygen (O_2) from air.

technical goals

- Optimize and screen sorbent formulations.
- Scale-up sorbent production.
- Perform long-term testing of the sorbent to demonstrate its durability through a minimum of 5,000 absorption/regeneration cycles.
- Design and size a conceptual air separation system based on experimental results.

technical content

Air separation units (ASUs) are one of the most expensive components of the integrated gasification combined cycle (IGCC) plant, accounting for approximately 18 percent of the overall plant cost and more than 14 percent of the cost of electricity (COE). TDA Research set out to develop a new, highly efficient, sorbent-based air separation technology that can produce high-purity O_2 from air at high temperatures (approximately 800 °C).

By performing the air separation at high temperatures, much of the COE increase is avoided, because much of the energy penalty associated with separating air by cryogenic methods is in cooling the gas to temperatures as low as 80 °K. Additionally, some of the capital cost is reduced due to the faster kinetics, which permits the use of less material.

TDA's sorbent, a mixed metal oxide, has been found to achieve up to 4 wt% O_2 capacity and maintain its capacity for more than 300 cycles. This sorbent can be regenerated under near isothermal and isobaric conditions by changing O_2 partial pressure between the absorption and regeneration bed. This then demands the use of a minimum of two separate reactors, one for absorption and the other for regeneration. A solid circulation system is being developed to eliminate the use of high-temperature valves. Figure 1 is a schematic depiction of this process.

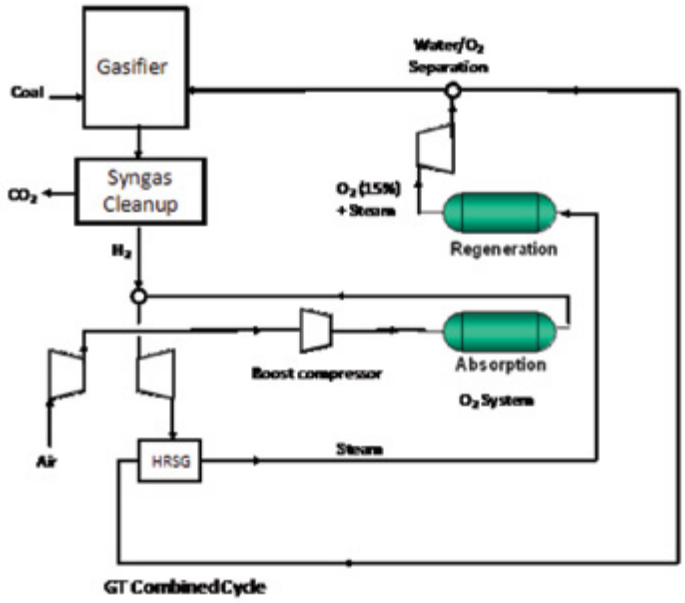

Figure 1: Schematic of Two Reactor Air Separation Units

technology maturity:
Bench-Scale

project focus:
Sorbents for Air Separation

participant:
TDA Research

project number:
FG02-08ER84216

NETL project manager:
Steven Markovich
markovis@netl.doe.gov

principal investigator:
Gokhan Alptekin
TDA Research
galptekin@tda.com

partners:
None

performance period:
8/7/06 – 8/6/10

It is estimated that the cost of O_2 could be as low as $18.5/tonne ($16.8/ton), which is a significant savings compared to cryogenic methods ($31 to $35/tonne) and is below the U.S. Department of Energy's (DOE) target of $22/tonne. Also, capital cost is estimated to be $85 to $104/kWe, which again is well below cryogenic plants ($360/tonne) and achieves DOE's target of $82 to $110/ton.

technology advantages

- The process temperature is maintained at 600 to 800°C to increase the reaction kinetics.
- The sorbent is regenerated under an inert gas (e.g., steam) at the same temperature and pressure, eliminating time required for temperature and/or pressure transitions.
- The oxidized phase is meta-stable and a small change in chemical potential leads to its reduction.

R&D challenges

Scale-up from batch to prototype.

results to date/accomplishments

- Optimized sorbent formulations and screened them under representative IGCC plant conditions.
- Scaled-up sorbent production.

next steps

This project ended on August 6, 2010.

available reports/technical papers/presentations

Alptekin, G.; Jayaraman, A.; Dubovik, M.; and Brickner, L., "Oxygen Sorbents for Oxy-fuel Combustion," presented at the 2008 AIChE Annual Meeting, Philadelphia, Pennsylvania, November 2008.

Alptekin, G.; Jayaraman, A.; Dubovik, M.; and Brickner, L., "Novel Air Separation Sorbents," presented at the Pittsburgh Coal Conference, Pittsburgh, Pennsylvania, September 2008.

Alptekin, G.; Jayaraman, A.; Dubovik, M.; and Brickner, L., "A Novel Air Separation Sorbent for Oxy-Combustion Process," presented at the International Technical Conference on Coal Utilization and Fuel Systems, Clearwater, Florida, June 2008.

PILOT-SCALE DEMONSTRATION OF A NOVEL, LOW-COST OXYGEN SUPPLY PROCESS AND ITS INTEGRATION WITH OXY-FUEL COAL-FIRED BOILERS

technology maturity:
Pilot-Scale, 0.7 tonnes O_2/day

project focus:
Low-Cost Oxygen Supply

participant:
The BOC Group, Inc, now Linde, LLC

project number:
FC26-06NT42748

NETL project manager:
Timothy Fout
timothy.fout@netl.doe.gov

principal investigator:
Krish R. Krishnamurthy
Linde, LLC.
krish.krishnamurthy@linde.com

partners:
Alstom Power Plant Laboratories
Western Research Institute

performance period:
4/1/06 – 9/30/08

primary project goals

The BOC Group (now Linde, LLC) set out to conduct pilot-scale tests of its Ceramic Auto-Thermal Recovery (CAR) oxygen (O_2) generation process, integrated with a coal-fired combustor, to produce a carbon dioxide (CO_2)-rich flue gas.

technical goals

Phase I:

- Evaluate the performance of a 0.7-tonne/day, O_2 pilot-scale CAR system (long- and short-duration), when fully integrated with a pilot-scale coal combustor, and determine the optimum operating conditions of the unit.
- Perform a techno-economic evaluation of a commercial-scale, O_2-fired power plant that utilizes a CAR system to provide the O_2.

technical content

In the CAR process, O_2 is separated from an air stream using a perovskite ceramic oxide adsorbent (composed of lanthanum, strontium, cobalt, and iron) at high temperature (800 to 900°C). As shown in Figure 1, the process involves two separate beds that are cycled to deliver the O_2 flow (one bed is adsorbing the oxygen, while the other is desorbing). The O_2 is desorbed from the catalyst by a partial pressure swing using a purge gas containing low levels of O_2 in standard runs; CO_2 is used for this purpose. Half-cycle times are varied for most efficient operational parameters, but fall in the range of 30 seconds to one minute. Multiple temperatures are monitored in the catalytic bed and are spatially placed to give an accurate representation of the bulk temperatures in the ceramic bed.

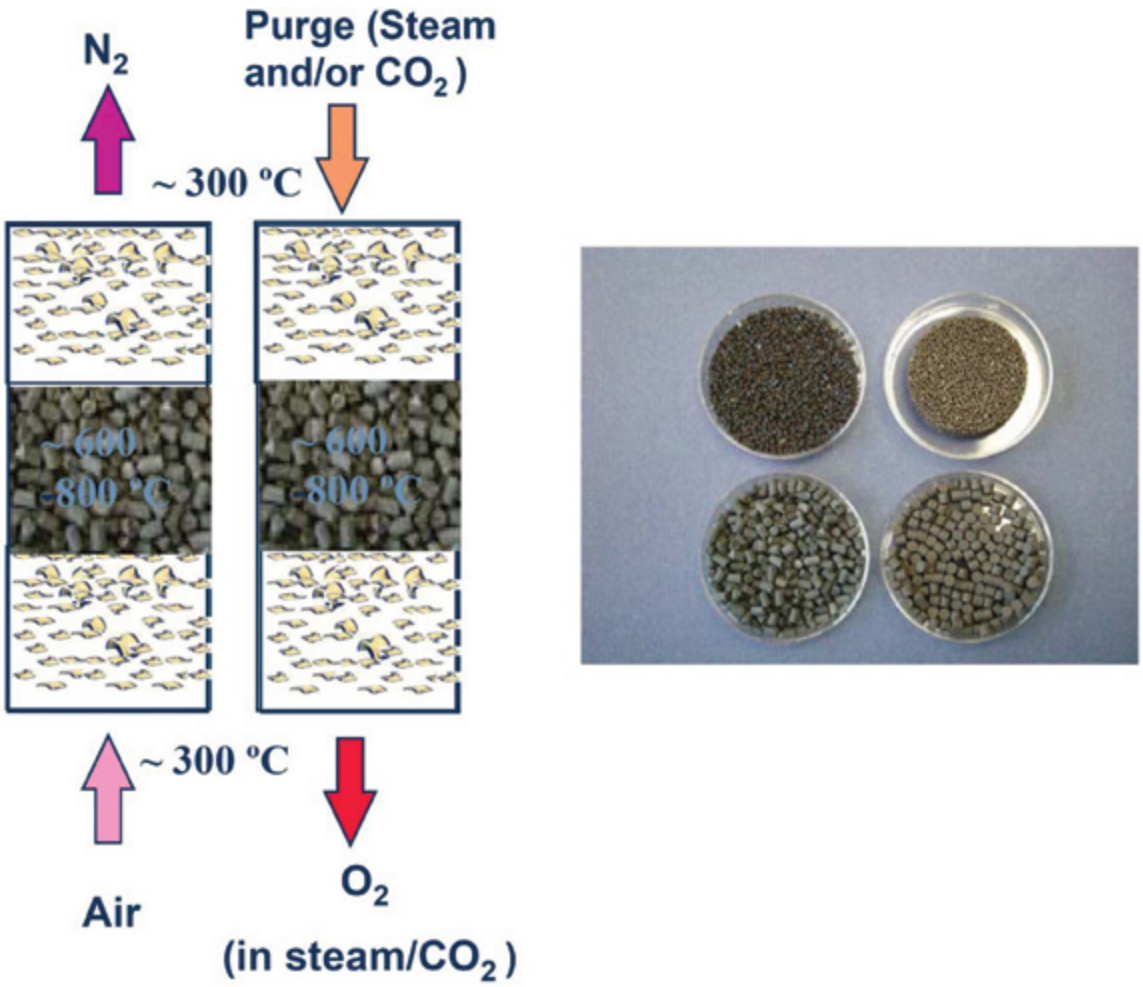

Figure 1: Ceramic Auto-Thermal Recovery (CAR) Two-Bed Oxygen Separation Process

technology advantages

The O_2 production process has shown a clear advantage in performance and cost compared to an air separation unit (ASU).

R&D challenges

Although the CAR process alone compares favorably to an ASU, the techno-economic analysis has shown that overall capital costs, heat losses, and fuel consumption make the CAR process unfavorable compared to an ASU unless the working oxygen capacity of the CAR adsorbent can be increased from the current level of approximately 0.5 wt% to approximately 1.0 wt%. In addition, long-duration tests have shown that the perovskite adsorbent experiences substantial mechanical breakdown and decline in performance when exposed to sulfur dioxide (SO_2).

results to date/accomplishments

Completed Phase I activities include:

- Evaluated the performance of the 0.7-tonne/day, O_2 pilot-scale CAR system (long- and short-duration) and determined the optimum operating conditions of the unit.
- Performed a techno-economic evaluation of a commercial-scale, O_2-fired power plant that utilizes a CAR system to provide the O_2.

next steps

This project ended on September 30, 2008.

available reports/technical papers/presentations

Krishnamurthy, K. R.; Acharya, D.; and Fitch, F. R., "Pilot-Scale Demonstration of a Novel, Low-Cost Oxygen Supply Process and its Integration with Oxy-Fuel Coal-Fired Boilers," Final Report, December 18, 2008. *http://www.netl.doe.gov/File%20Library/Research/Coal/ewr/co2/42748-BOC-O2-supply-CAR-Final-Report_Dec-2008.pdf*.

Krishnamurthy, K. R.; Barton, T.; Braunberger, B.; Omar, K.; and Sethi, V., "Demonstration of a Novel, Low-Cost Oxygen Supply Process and its Integration with Oxy-Fuel Coal-Fired Boilers," presented at 6th Annual Conference on Carbon Capture and Sequestration, Pittsburgh, Pennsylvania, May 2007. *http://www.netl.doe.gov/File%20Library/Research/Coal/ewr/co2/42748-BOC-O2-supply-CAR-6th-CCS-conference-2007.pdf*.

APPENDIX B: CARBON DIOXIDE CAPTURE TECHNOLOGY SHEETS

CHEMICAL LOOPING

ALSTOM'S CHEMICAL LOOPING COMBUSTION TECHNOLOGY WITH CO_2 CAPTURE FOR NEW AND EXISTING COAL-FIRED POWER PLANTS

technology maturity:
Bench-Scale

project focus:
Chemical Looping Combustion Technology

participant:
Alstom Power

project number:
FE0009484

NETL project manager:
Bruce Lani
bruce.lani@netl.doe.gov

principal investigator:
Herbert E. Andrus
Alstom Power, Inc
herbert.e.andrus@power.alstom.com

partners:
N/A

performance period:
10/1/12 – 9/30/13

primary project goals

Progression of the development of an advanced chemical looping combustion (CLC) system for coal-fired power generation that removes greater than 90 percent of the carbon dioxide (CO_2) with a less than 20 percent increase in the cost of electricity (COE).

technical goals

- Advance the development of the chemical looping technology using economic and engineering studies as a screening tool for process and equipment improvements.
- Perform engineering and economic analysis on the effects of operating pressure on the COE to determine the most practical, cost-effective configuration.
- Perform engineering analysis to determine practical methods and limitations of achieving pressurized operations.
- Perform engineering analysis and bench-scale testing to investigate possible process improvements.

technical content

Alstom Power will investigate improvements to a unique CLC system previously developed for CO_2 capture and separation. Alstom's Limestone Chemical Looping Combustion (LCL-CTM) technology has progressed though research conducted in the past 10 years under previous projects (DE-NT0005286, NT41866). The LCL-C technology is applicable for use in new plants or retrofit to existing pulverized coal (PC)-fired and circulating fluidized bed (CFB) power plants.

CLC utilizes a metal oxide or other compound, in this case limestone ($CaSO_4$), as an oxygen carrier to transfer oxygen from the combustion air to the fuel. Since direct contact between fuel and combustion air is avoided, the products of combustion (CO_2 and water) are kept separate from the rest of the flue gases (primarily nitrogen). CLC splits combustion into separate oxidation and reduction reactions. The carrier releases oxygen in a reducing atmosphere to react with the fuel. The carrier is then recycled back to the oxidation chamber to be regenerated by contact with air.

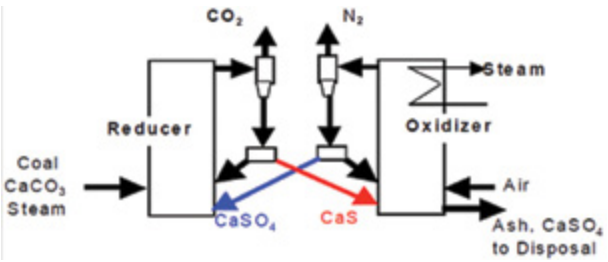

Figure 1: Limestone-Based CLC Process

Calcination of hot solids produced in the oxidation reactor produce a concentrated stream of CO_2 in lieu of the dilute CO_2 stream typically found in flue gas from coal-fired power plants.

Prior R&D (in DOE project DE-NT0005286), Alstom scaled-up the limestone-based CLC process from a 65-kWth pilot, which was successfully demonstrated in an earlier project (DOE project NT41866), to a 3-MWth prototype facility that was operational in 2010 and 2011. Alstom was able to operate the 3-MWth prototype for 12 hours under autothermal conditions, using only coal as fuel, achieving 96 percent capture of CO_2.

The current R&D effort, Phase I work for project DE-FE0009484, will include economic evaluations of four LCL-C plant configurations. The base case for the study will be a previously developed CLC plant that will be updated to a current U.S. Department of Energy (DOE) economic basis. It will be used for comparison against other alternatives for the techno-economic studies in this project. A second case will determine the effect of designing the reducer reactor using standard CFB gas velocities. A third case will investigate the effect of using a pressurized reduction reactor, which reduces the reactor size and the amount of compression required for the CO_2 outlet gas stream. A fourth case will investigate the use of an advanced ultra-supercritical (USC) steam cycle for the chemical looping system. The advanced USC steam cycle should increase overall plant efficiency and lower the COE. Mass and energy balances will be performed for each case. The four LCL-C cases will be compared against a base case study of a supercritical PC plant without CO_2 capture.

In conjunction with the economic evaluations, Alstom will conduct a series of engineering studies focusing on equipment performance and selection for pressurized reducer operation, as well as investigating several potential areas for process improvement. Specific systems targeted include solids and fuel management with a pressurized reactor, and methods for accommodating a high-pressure differential between two connected reactors under steady state and load change conditions. Areas of study for process improvement include the sensitivity of the plant efficiency to reducer pressure, the effect of reducer pressure on reaction kinetics, impact and methods for maximizing carbon retention in the reducer, and enhanced oxygen carrier performance.

technology advantages

- Air separation unit (ASU) is not required for oxygen production.
- CO_2 separation takes place during combustion.

R&D challenges

- Scale-up issues.
- Solids handling and transport.
- Oxygen carrying and reactivity.

results to date/accomplishments

Project DE-FE0009484

- Engineering on LCL-C™ Case 1 was completed.
- Material and energy balances for the LCL-C Islands have been completed for the other three cases.

Project DE-NT0005286

- Detailed preliminary engineering completed.
- Installation of prototype unit completed.
- Shakedown and testing of prototype unit complete.

next steps

- Thermoflow (thermal engineering software) models will be developed for each LCL-C plant configuration and used to produce detailed mass and energy balances along with predicted performances.
- Engineering studies will be conducted to focus on equipment performance and selection for pressurized reducer operation, as well as to investigate several potential areas for process improvement.
- A technology gap analysis will be conducted for the five cases investigated.

available reports/technical papers/presentations

Abdullaly, I., et.al, "Alstom's Calcium Oxide Chemical Looping Combustion Prototype for CO_2 Capture from Existing Pulverized Coal Fired Power Plants," presented at the 2012 NETL CO_2 Capture Technology Meeting, Pittsburgh, Pennsylvania, July 2012. *http://www.netl.doe.gov/publications/proceedings/12/co2capture/presentations/3-Wednesday/I%20Abdulally-Alstom-CLC%20Prototype.pdf*.

Andrus, H., "Alstom's Calcium Oxide Chemical Looping Combustion Prototype Development," presented at the 2010 CO_2 Capture Technology Meeting, Pittsburgh, Pennsylvania, September 2010. *http://www.netl.doe.gov/publications/proceedings/10/co2capture/presentations/wednesday/Herb%20Andrus-NT0005286.pdf*.

Andrus, H., "Chemical Looping Combustion Coal Power Technology Development Prototype," presented at the Annual NETL CO_2 Capture Technology for Existing Plants R&D Meeting, Pittsburgh, Pennsylvania, March 2009. *http://www.netl.doe.gov/publications/proceedings/09/CO2/pdfs/5286%20Alstom%20chemical%20looping%20%28Andrus%29%20mar09.pdf*.

Nsakala, N. Y. and Liljedahl, G. N., Greenhouse Gas Emissions Control by Oxygen Firing in Circulating Fluidized Bed Boilers, Alstom Power – U.S. DOE Report, PPL Report No, PPL-03-CT-09, 15 May 2003.

Andrus, H. E., Jr., et. al., Hybrid Combustion-Gasification Chemical Looping Coal Power Technology Development – Phase 1 Final Report, U.S. DOE, December 29, 2004.

Andrus, H. E., Jr., et. al., Hybrid Combustion-Gasification Chemical Looping Coal Power Technology Development – Phase II Final Report, U.S. DOE, June 9, 2006.

COMMERCIALIZATION OF THE IRON-BASED COAL-DIRECT CHEMICAL LOOPING PROCESS FOR POWER PRODUCTION

primary project goals

The Babcock and Wilcox Power Generation Group, Inc. (B&W) will validate the iron-based coal-direct chemical looping (CDCL) process and evaluate its potential as a cost-effective carbon dioxide (CO_2) capture technology for electric power generation.

technical goals

- Develop a commercial plant design concept.
- Perform a techno-economic evaluation of the commercial design.
- Identify technology gaps.
- Develop a preliminary design and budget estimate for a suitable pilot facility that will address the technology gaps and provide additional information to advance its technology readiness level.

technical content

B&W, in collaboration with Ohio State University (OSU) and Clear Skies Consulting, is developing an advanced, iron-based CDCL process. Over the past 10 years, OSU has developed a proprietary iron oxide (Fe_2O_3)-based composite oxygen carrier particle that is 10 times more reactive than pure Fe_2O_3 and is recyclable for more than 100 reduction-oxidation cycles without loss in reactivity. The CDCL process developed at OSU evolved from a novel concept to an integrated sub-pilot (25-kWth)-scale system with more than 200 hours of successful continuous operation studying various kinds of coal.

The CDCL process consists of a unique moving bed reduction reactor where coal reacts with the iron-based oxygen carrier particles to form normal combustion products, predominantly CO_2 and H_2O, while reducing the oxygen carrier particles from iron (III) oxide (Fe_2O_3) to a mixture of iron (II) oxide (FeO) and iron (Fe). The reduced oxygen carrier particles are then sent to a combustor where they are regenerated with air. The oxygen carrier particle oxidation reaction (particle regeneration) releases large amounts of heat to generate steam for power generation. The CO_2 produced in the reducer is cooled, cleaned, and compressed for sequestration or to be used for enhanced oil recovery (EOR). The unique reactor design and reaction pathway of the CDCL process allows for repowering or greenfield installation. A preliminary techno-economic analysis indicated the CDCL process has the potential to achieve greater than 96 percent CO_2 capture with an increase in the cost of electricity (COE) of approximately 33 percent.

technology maturity:

Sub-Pilot 25 kWth-Scale Demonstration

project focus:

Iron-Based Coal Direct Chemical Looping

participant:

Babcock & Wilcox

project number:

FE0009761

NETL project manager:

Bruce Lani
bruce.lani@netl.doe.gov

principal investigator:

Luis Velazquez-Vargas
Babcock & Wilcox Power Generation Group, Inc.
lvargas@babcock.com

partners:

The Ohio State University
Clear Skies Consulting

performance period:

10/1/12 – 9/30/13

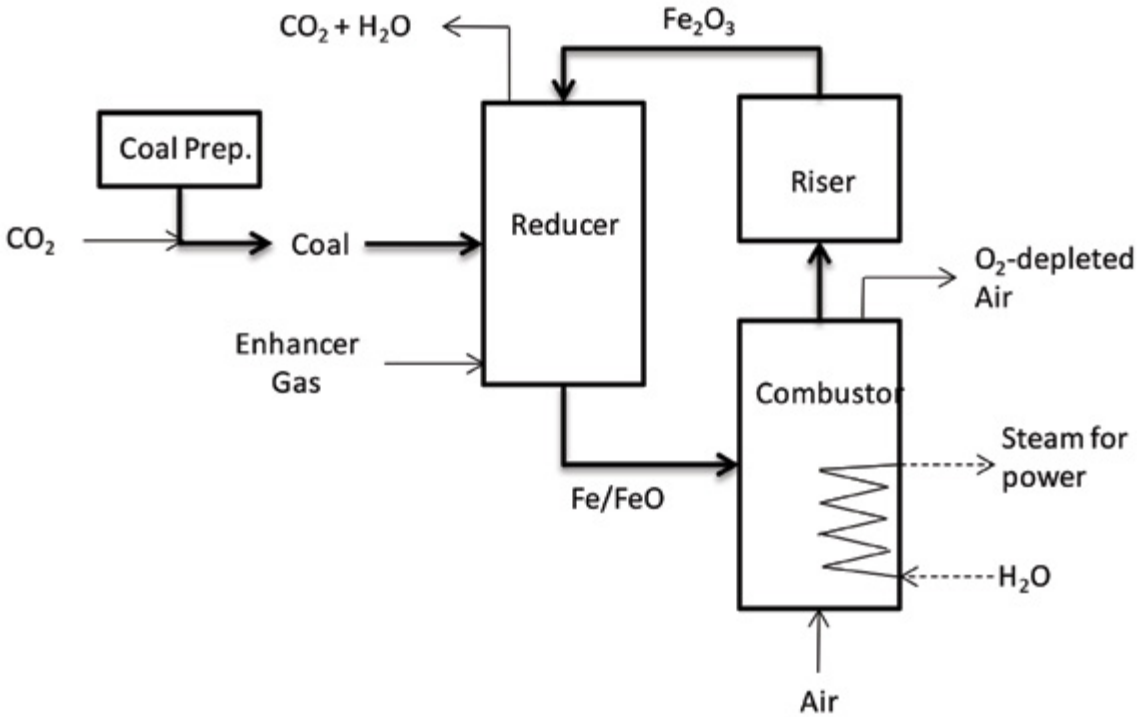

Figure 1: Simplified Schematic of the Coal Direct Chemical Looping Combustion Process

In Phase I, the project will validate the advanced CDCL process for power generation through a techno-economic analysis and development of a commercial-scale plant design. By leveraging laboratory and previous sub-pilot work, the project team will collect data regarding oxygen carrier particle and process performance. A conceptual 550-megawatt electric (MWe) plant design will be developed. A previously developed Aspen Plus® process model will be updated to incorporate the commercial CDCL process parameters. Based on the process simulation results and the detailed plant cost estimate, a comprehensive economic analysis of the commercial CDCL plant will be conducted and the COE will be determined. A sensitivity analysis will be performed to evaluate the effects of changes to key process parameters on the project economics. A detailed process analysis will identify and quantify critical technology gaps requiring closure to establish the viability of the commercial CDCL plant.

technology advantages

- Need for the air separation unit is eliminated.
- The CDCL technology is applicable to both new and existing power plants.
- The process can be applied for repowering of existing plants, as the CDCL process requires no modification of the existing steam turbine cycle.

R&D challenges

- Reducer, combustor, and riser design and performance.
- Oxygen carrier particle formulation and performance.

results to date/accomplishments

- Completed the detail mass and energy balances.
- Completed conceptual 550-MWe commercial plant design.

next steps

- Develop a proposal-level cost for the commercial CDCL plant design and complete a comprehensive economic analysis of the plant.
- Determine the technical gaps separating the current CDCL technology and a commercial product that meets U.S. Department of Energy goals.

available reports/technical papers/presentations

N/A

COAL-DIRECT CHEMICAL LOOPING RETROFIT TO PULVERIZED COAL POWER PLANTS FOR IN-SITU CO_2 CAPTURE

technology maturity:

Bench-Scale

project focus:

Coal-Direct Chemical Looping for Retrofits

participant:

Ohio State University

project number:

NT0005289

NETL project manager:

Bruce Lani
bruce.lani@netl.doe.gov

principal investigator:

Liang Shih Fan
Ohio State University
fan.1@osu.edu

partners:

Babcock & Wilcox Power Generation Group, Inc.
Clear Skies Consulting
CONSOL Energy Inc.
Shell/CRI/Criterion Inc.
Air Products and Chemicals Inc.

performance period:

1/1/09 – 9/30/13

primary project goals

Ohio State University (OSU) is developing an iron oxide (Fe_2O_3)-based chemical looping process for retrofit on existing coal-fired power plants.

technical goals

- Select optimum iron-based oxygen (O_2) carrier. Evaluate the reactivity, recyclability, and physical strength of different Fe_2O_3-based O_2 carrier particle compositions.
- Demonstrate bench-scale (2.5 kWth) coal-direct chemical looping (CDCL) system including fuel reactor demonstration and coal char and volatile conversion. Determine optimum fuel reactor operating conditions to gasify coal char using O_2 carrier particle.
- Demonstrate sub-pilot-scale (25 kWth) CDCL system including integration of fuel reactor and combustor with continuous solid circulation at reaction temperature. Operate integrated sub-pilot system for a minimum of 50 continuous hours with the optimal O_2 carrier. Determine the fate of nitrogen oxide (NO_x) and sulfur via integrated system testing.
- Conduct ASPEN simulation based on the CDCL test results.
- Conduct techno-economic study.

technical content

Researchers at OSU are developing a one-step CDCL process to produce electric power and high-purity carbon dioxide (CO_2) in retrofit power plant applications. While preliminary tests with the bench-scale reactor have shown 90 to 95 percent coal char conversion and >99 percent volatile conversion, the primary focus of this project is to identify the optimal O_2 carrier chemical composition and conduct integrated, continuous CDCL testing at the sub-pilot (25 kWth) scale.

As shown in Figure 1, the CDCL system consists of a fuel reactor and a combustor. The moving-bed fuel reactor utilizes a countercurrent gas-solid contacting pattern to maximize the conversion of the Fe_2O_3-based O_2 carrier, as it transfers O_2 to facilitate coal combustion. The combustor, an entrained-flow reactor, uses air to pneumatically transport the O_2 carrier back to the fuel reactor, while re-oxidizing the O_2 carrier and generating a significant amount of heat. A portion of the heat generated in the combustor is used for steam generation via the high-temperature exhaust gas, while the remainder is carried to the fuel reactor by the hot regenerated particles to supply the heat required for coal combustion.

The O_2 carrier consists primarily of Fe_2O_3 based on earlier tests that showed an acceptable O_2 capacity and no loss of activity during more than 100 redox cycles in a thermogravimetric analyzer (TGA) test. To optimize the reactivity, recyclability, and physical strength of the Fe_2O_3-based O_2 carrier for the CDCL process, OSU researchers evaluated the perfor-

mance of different support materials and promoters using a TGA and a fixed-bed reactor. These initial screening experiments were used to select the 10 most reactive and recyclable particle compositions, which were subjected to additional reactivity and physical strength tests. These 10 particles were tested to measure their reactivity with coal char in an inert environment and their tolerance to carbon deposition using a TGA. The particles were then pelletized for further evaluations, such as pellet strength and reactivity, using a fixed-bed. After eliminating pellets with unacceptable strength and reactivity, the five most promising Fe_2O_3-based composite O_2 carrier particles were identified.

Bench-scale (2.5 kWth) testing of the five most promising O_2 carrier particle compositions in a moving-bed reactor will be used to determine the optimal O_2 carrier particle composition for the CDCL process. A series of bench-scale tests have been conducted for more than 100 hours.

Using the sub-pilot-scale (25 kWth) testing unit shown in Figure 2, the integrated CDCL process will be evaluated during a minimum of 50 hours of continuous operation with the optimal O_2 carrier particle composition. During testing, OSU researchers will monitor the composition of outlet gases (including CO_2, sulfur dioxide [SO_2], and NO_x), attrition of the O_2 carrier, and the ash separation effectiveness of the cyclone system.

To quantify the performance and potential benefits of the CDCL process, detailed modeling and a techno-economic analysis of the system will be conducted by CONSOL Energy.

technology advantages

- An air separation unit is not required for O_2 production.
- CO_2 separation simultaneously takes place with the coal conversion.
- The CDCL process is a versatile technology that can produce power, synthesis gas (syngas), or hydrogen (H_2), while offering fuel flexibility.

R&D challenges

- Scale-up issues.
- Solids handling and transport.
- O_2 carrier capacity, reactivity, and attrition.
- Slow reaction rates between the O_2 carrier and coal char.
- Ash management.

results to date/accomplishments

- Completed analyses for selection of optimum O_2 carrier and support particle. Identified five Fe_2O_3-based O_2 carrier particles. Testing of the O_2 carrier particles included evaluation of recyclability, carbon deposition tolerance, reaction with coal char, and pellet strength and reactivity.
- Demonstrated coal conversion by O_2 carrier using a TGA for solids analysis and a fixed-bed experiment for gas analysis.
- Conducted bench-scale testing (2.5 kWth) of coal char conversion. Studied the effects of H_2O (steam) and CO_2 as gasification enhancers on metallurgical coke char with the goal to determine the optimum O_2 carrier. Achieved 97 percent char conversion with H_2O (steam) as the gasification enhancer and 88 percent char conversion with CO_2 as the gasification enhancer.
  - The conditions that produce the highest conversion are the use of steam as an enhancer gas, higher temperatures, higher char residence times, and higher O_2 carrier to char ratios. However, all of these factors need to be optimized, since a high residence time will result in a larger, more capital-intensive setup, and a higher temperature will result in possible sintering of particles. Furthermore, the use of steam is a parasitic energy requirement, so conversion using steam needs to be controlled.
- Conducted solid handling and gas sealing study for sub-pilot-scale demonstration using the cold model reactor.

- Demonstrated the robustness of the 25-kWth sub-pilot unit for coal conversion for more than 830 hours of operation, which includes a 200-hour continuous operation. Results show nearly 100 percent CO_2 purity with a steady fuel conversion greater than 95 percent.
  - Results indicate the ability to capture carbon without the need for a carbon-stripping step for incomplete carbon conversion or an oxygen-polishing step for the CO_2 stream. Performance of carbon capture in the CDCL system was determined using three fuels (metallurgical coke, sub-bituminous coal, lignite coal).
  - Determination of the fate of sulfur and nitrogen pollutants for low-rank fuels such as sub-bituminous and lignite coals reveal the pollutants exit the system in the CO_2 stream and not in the spent air stream for lower-ranked coals (sub-bituminous and lignite).

next steps

- Continued integrated 25-kWth sub-pilot demonstration with varied operating parameters.
- Conduct ASPEN simulation studies.
- Complete a techno-economic analysis.

available reports/technical papers/presentations

Kim, H.R.; Wang, D.; Zeng, L.; Bayham, S.; Tong, A.; Chung, E.; Kathe, M. V.; Luo, S.; McGiveron, O.; Wang, A.; Sun, Z.; Chen, D.; Fan, L.-S., "Coal direct chemical looping combustion process: Design and operation of a 25-kWth sub-pilot unit," Fuel 108 (2013) 370–384.

Bayham, S. C.; Kim, H. R.; Wang, D.; Tong, A.; Zeng, L.; McGiveron, O.; Kathe, M. V.; Chung, E.; Wang, W.; Wang, A.; Majumder, A.; Fan. L.-S., "Iron-Based Coal Direct Chemical Looping Combustion Process: 200-h Continuous Operation of a 25-kWth Subpilot Unit," Energy Fuels 27 (2013) 1347-1356.

Tong, A.-S., "Coal Direct Chemical Looping Retrofit to Pulverized Coal Power Plants for In-situ CO_2 Capture," presented at the 2012 NETL CO_2 Capture Technology Meeting, Pittsburgh, Pennsylvania, July 2012. *http://www.netl.doe.gov/publications/proceedings/12/co2capture/presentations/3-Wednesday/LS%20Fan-OSU-CDCL.pdf*.

Fan, L.-S., "Coal Direct Chemical Looping Retrofit to Pulverized Coal Power Plants for In-situ CO_2 Capture," presented at the 2011 NETL CO_2 Capture Technology Meeting, Pittsburgh, Pennsylvania, August 2011. *http://www.netl.doe.gov/publications/proceedings/11/co2capture/presentations/3-Wednesday/24Aug11-Fan-OSU-Coal%20Direct%20Chem%20Looping.pdf*.

Fan, L.-S., "Chemical Looping Systems for Fossil Energy Conversions," John Wiley & Sons, Inc., Hoboken, NJ, USA, October 2010. *http://www.wiley.com/WileyCDA/WileyTitle/productCd-0470872527.html*.

Kim, R., "Coal Direct Chemical Looping (CDCL) Retrofit to Pulverized Coal Power Plants for In-Situ CO_2 Capture," presented at the 2010 NETL CO_2 Capture Technology Meeting, Pittsburgh, Pennsylvania, September 2010. *http://www.netl.doe.gov/publications/proceedings/10/co2capture/presentations/wednesday/Ray%20Kim-NT0005289.pdf*.

Kim, R., "Coal Direct Chemical Looping Retrofit for Pulverized Coal-fired Power Plants with In-Situ CO_2 Capture," presented at the Annual NETL CO_2 Capture Technology for Existing Plants R&D Meeting, Pittsburgh, Pennsylvania, March 2009. *http://www.netl.doe.gov/publications/proceedings/10/co2capture/presentations/wednesday/Ray%20Kim-NT0005289.pdf*.

MAGNETICALLY FLUIDIZED BED REACTOR DEVELOPMENT FOR THE LOOPING PROCESS: COAL TO HYDROGEN PRODUCTION R&D

primary project goals

The University of Florida (UF) is developing novel fluidized bed and magnetically stabilized bed reactor systems that use a chemical looping process with metal oxide sorbents to separate hydrogen (H_2) and carbon dioxide (CO_2) from coal-derived synthesis gas (syngas).

technical goals

- Conduct laboratory-scale testing to investigate chemical, heat, and mass transfer in the fluidized and magnetically stabilized bed reactors, and develop modeling/simulation tools.
  - Determine optimal reaction pathways and operation conditions for iron (Fe) and alloyed Fe-metal oxide powders in both reducing and oxidizing environments.
  - Evaluate the chemical kinetics for reaction pathways.
  - Characterize chemical, thermal, and fluid transport properties of fluidized bed and magnetically stabilized bed reactors.
  - Investigate reactivity and durability of Fe, Fe/zirconia (Zr), and Fe/magnesium oxide (MgO).
  - Conduct a techno-economic analysis.
- Design, construct, and operate a bench-scale system to further evaluate the viability of the process upon successful completion of the laboratory-scale testing

technical content

The metal oxide looping process is a two-step process; in its simplest form, steam is injected into a reactor containing a reduced metal oxide (e.g., iron oxide [FeO]). The steam oxidizes the FeO to produce magnetite (Fe_3O_4), and high-purity H_2 is liberated. The H_2 is captured by condensing the water vapor from the steam and H_2 mixture. In the second step, the Fe_3O_4 must be reduced so that water splitting can proceed in a cyclic manner. The looping process uses carbon monoxide (CO) produced from the gasification of coal to reduce the Fe_3O_4. The advantages of the chemical looping process are that the H_2 produced via water splitting is highly pure, and the reduction step can be accomplished at sufficiently low temperature (400 to 850°K) to enable a commercially viable reactor. The highly concentrated CO_2, produced during the reduction step, is suitable for sequestration.

Research efforts focus on detailed thermal management throughout the process to enable efficient recuperation of heat; advanced reactor design that enables rapid kinetics; Fe or other metal powders that are stable and highly reactive over thousands of cycles; and operation in thermodynamically favorable regimes to maximize H_2 production and minimize the formation of Fe-carbide compounds. The successful design of an efficient and cost-effective chemical reactor will ensure rapid kinetics, a homogenized thermal field, a high production rate, uniform solids distribution, completed reaction pathways, and low-pressure drop with minimal energy consumption.

technology maturity:

Laboratory-Scale

project focus:

Magnetically Fluidized Chemical Looping

participant:

University of Florida

project number:

FE0001321

NETL project manager:

Steven Markovich
steven.markovich@netl.doe.gov

principal investigator:

Renwei Mei
University of Florida
rwmei@ufl.edu

partners:

N/A

performance period:

10/1/09 – 9/30/13

The fluidization of magnetic powders has received considerable attention in the literature. The majority of the fluidization approaches utilize magnetically assisted fluidization. In this process, a uniform steady magnetic field is applied to a conventional fluidized bed to stabilize it. The advantage of operating in this regime is that sintering, which occurs during the oxidation step, creates a fixed structure reactor that maintains a high porosity, surface area, favorable chemical kinetics, and low-pressure drop. The application of the magnetic field eliminates bubbling and serves to stabilize the fluidized bed to promote bed uniformity with favorable chemical kinetics. Magnetically stabilized fluidized beds provide enhanced uniformity of void fraction, enhanced heat transfer, and enhanced reactivity. In addition, a conventional fluidized bed reactor is studied for comparison with the magnetically stabilized bed. A blend of Fe and low-cost silica (SiO_2) powder is used to suppress particle sintering and sustain fluidization.

Figure 1 shows the process flow diagram for the chemical looping process. Coal is the input to the system, and the outputs consist of highly pure H_2 and highly concentrated CO_2 that is suitable for sequestration. The energy content of gasifier products and heat released during the oxidation step drives the complete chemical looping process. Steam at the desired temperature is obtained by using the high-temperature syngas. Treated syngas is reheated to the required reduction temperature using the raw syngas. Two identical reactors are used in the process in order to maintain a continuous stream of products. While one reactor operates in the oxidation mode producing H_2, the other reactor operates in the reduction mode regenerating the Fe bed.

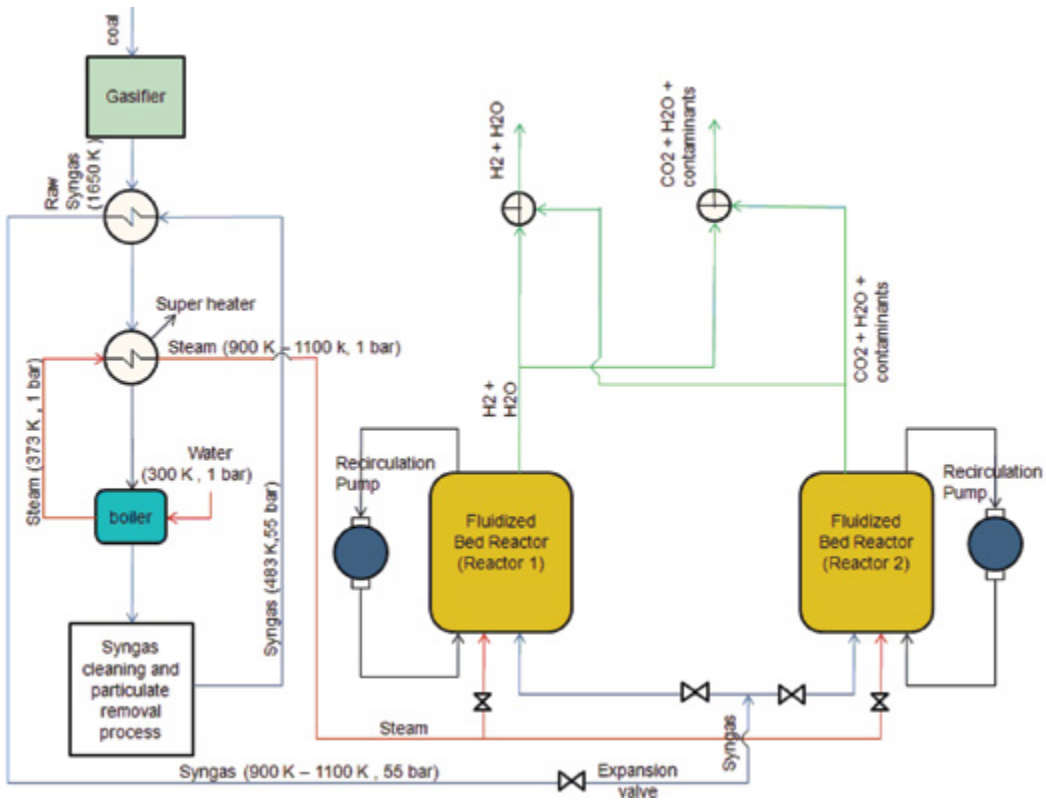

Figure 1: Process Flow Diagram of the Chemical Looping Process Using Cleansed Syngas for the Oxidation Step

A laboratory-scale, magnetically stabilized reactor has been fabricated, and its performance is being characterized. The cylindrical reactor shown in Figure 2 is fabricated with a quartz wall and can accommodate the upper operating temperature limit of the reactor (800°C). A porous ceramic frit is positioned at the entrance of the reactor in order to evenly distribute the flow. Two magnetic poles produce a transverse magnetic field and create magnetic chains of Fe particles within the bed. The magnetic chains repel each other, because of their polarity, and form a naturally porous structure. The reactants enter the reactor from the bottom and exit through the top. The reactor is insulated with high-temperature ceramic fiber insulation.

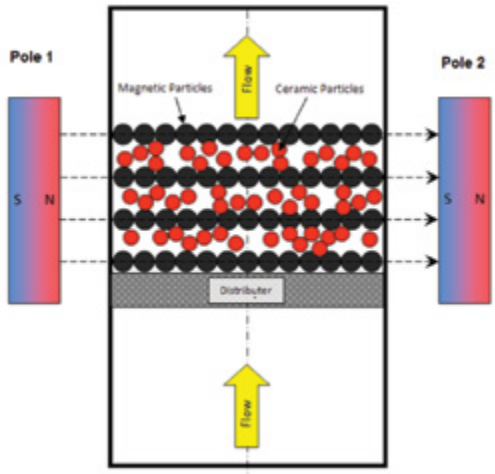

Figure 2: Magnetically Stabilized Bed Reactor [2]

This novel reactor has inherent advantages. It exploits the particle sintering during the oxidation step to form a stable porous structure. The high porosity favors chemical reaction and low-pressure drop through the bed. A first principle-based model has been developed that takes fluid momentum, thermal, and species transport into consideration. The model has been validated with the experimental measurements in the lab- and bench-scale reactors over a wide range of operating conditions. The computational results from the model provide reliable predictions for the large-scale throughput in a scaled-up design.

technology advantages

- Chemical looping enables extraction of high-purity H_2 and sequestration-ready CO_2 from syngas near gasification operating conditions to obtain improved thermal efficiency over more traditional gas separation methods that operate at low temperatures and pressures.
- Metal oxide sorbents with magnetic properties significantly reduces pressure drop, provides more uniform solids distribution, and aid in solids transport within the magnetically stabilized bed reactors.
  - A uniform stabilized bed with no large voids can be sustained, thus more uniform flow through the bed is established.
  - Uniform porosity results in uniform temperature field within the reactor bed.
  - Large surface area available to enhance reaction rate per unit volume.
  - The bed stabilization characteristics can be controlled through the magnetic input field configuration and strength.
  - High-velocity vapor flow can be sustained without the risk of caring the particles out of the reactor and damaging the structure.
  - Stoichiometric flow can be sustained.

R&D challenges

- Iron powders have a tendency to sinter at high temperature, which inhibits chemical reactions.
- Maintaining stability of powder reactivity over many cycles.
- Multi-scale, multi-physics modeling effort is required.

results to date/accomplishments

- Completed a comprehensive parametric chemical equilibrium study for the chemical looping cycle based on Fe and Fe oxides. A thermodynamic investigation of the H_2 production step indicates that H_2 is favored at low temperatures with steam to H_2 conversion exceeding 90 percent at reaction temperatures below 700°K. The H_2 yield is independent of pressure.
- Constructed and tested a laboratory-scale experimental system to evaluate H_2 and CO_2 productions performance in the magnetically stabilized bed reactor. Investigated the optimum conditions for providing the best reaction results using magnetically stabilized porous matrix of Fe-SiO_2.

- Devised three distinct plant layouts for reaction temperature ranges of 500 to 900°K, 900 to 1,100°K, and 1,100 to 1,200°K, respectively. Results from a thermal management study for the proposed chemical looping process indicate that no external energy is needed for looping cycle based H_2 production, but system configurations vary with temperature. Simulation of multiple cycles indicates that temperatures in the 900 to 1,000°K range will maximize H_2 yield.
- Demonstrated a high yield of H_2 and CO_2 productions within the magnetically stabilized bed reactor over several looping cycles.
- The fluidization regimes, bed expansion, and pressure drop were measured over a range of mass flux, mixture concentration, and magnetic field strength.
- Hydrogen production, as well as the reduction kinetic rate, has been measured over many redox cycles.
- Fundamental kinetic studies were completed, and a reaction rate law that is consistent with observation has been constructed.
- A Fortran-based multi-physics simulation code was developed to model reactive flows during oxidation and reduction in magnetically stabilized beds.
- Economical analysis on the operation cost is performed, and the hydrogen production cost is determined to be less than \$1.6/kg_{H2}.

next steps

Large-scale reactor design and system control.

available reports/technical papers/presentations

Mehdizadeh, A.; Klausner, J. F.; Mei, R.; and Barde, A., "Enhancement of thermochemical hydrogen production using an iron-silica magnetically stabilized porous structure." International Journal of Hydrogen Energy, 37:8954-8963, 2012. *http://www.sciencedirect.com/science/article/pii/S036031991200554X*.

Mehdizadeh, A.M., et.al, "Investigation of hydrogen production reaction kinetics for an iron-silica magnetically stabilized porous structure," International Journal of Hydrogen Energy, 37(18): 13263-13271, 2012. *http://www.sciencedirect.com/science/article/pii/S0360319912016126*.

Mehdizadeh, A.; Mei, R.; Klausner, J. F.; and Rahmatian, N., "Interaction forces between soft magnetic particles in uniform and non-uniform magnetic fields," Acta Mechanica Sinica, 26: 921-929, 2010. *http://link.springer.com/article/10.1007%2Fs10409-010-0383-y#page-1*.

Allen, K.; Mehdizadeh, A. M.; Klausner, J. F.; and Coker, E. N., "Study of a Magnetically Stabilized Porous Structure for Thermochemical Water Splitting via TGA," High-Temperature-XRD, and SEM Analyses, Industrial & Engineering Chemistry Research, 52 (10): 3683-3692, 2013. *http://pubs.acs.org/doi/abs/10.1021/ie302691e*.

Lipiński, W., et.al, "Review of Heat Transfer Research For Solar Thermochemical Applications," Special Issue of Journal of Thermal Science and Engineering Applications, Manuscript ID: TSEA-12-1173, October 2012 (In Press).

SOLID-FUELED PRESSURIZED CHEMICAL LOOPING WITH FLUE GAS TURBINE COMBINED CYCLE FOR IMPROVED PLANT EFFICIENCY AND CO_2 CAPTURE

technology maturity:
Laboratory-Scale

project focus:
Solid-Fueled Pressurized Chemical Looping

participant:
University of Kentucky

project number:
FE0009469

NETL project manager:
Bruce Lani
bruce.lani@netl.doe.gov

principal investigator:
Kunlei Liu
University of Kentucky
kunlei.liu@uky.edu

partners:
Southeast University
Worley Parsons

performance period:
9/25/12 – 9/30/13

primary project goals

The University of Kentucky Center for Applied Energy Research (UK-CAER) will investigate a heat-integrated, coal-based combined cycle for power generation using a pressurized chemical looping combustor (PCLC). The PCLC system aims to produce high-temperature flue gas for electricity generation through a gas turbine and a heat recovery unit combined with a conventional steam cycle. The cost-effectiveness and efficiency of the process using iron-based oxygen carriers (OCs) will be examined.

technical goals

- Validate the PCLC process application for power generation through engineering system and economic analysis.
- The University of Kentucky will design and cost a 200-kW PCLC pilot plant based on the results of the data analysis and cost estimates from the 550-MW, commercial-scale economic case study.
- Demonstrate an advanced coal-based power generation technology to potentially meet U.S. Department of Energy (DOE) targets for cost of electricity (COE) while capturing at least 90 percent of the carbon dioxide (CO_2) released during combustion of fossil fuels.

technical content

UK-CAER is developing a heat-integrated, coal-based combined cycle system for highly efficient power generation. This system will use a PCLC to produce high-temperature flue gas for electricity generation through a gas turbine and a heat recovery unit for supercritical steam production to drive a conventional steam cycle. The PCLC consists of two reactors: (1) an Oxidizer, in which oxygen from air is selectively fixed into an oxygen-carrier structure; and (2) a reducer (Redox), in which coal is burned by the OC. The PCLC will generate two gas streams: (1) a high-temperature, high-pressure, alkali-free clean gas from the oxidizer used to drive an aero-turbine (Brayton Cycle) followed by a heat-recovery steam generator (HRSG) for a Rankine Cycle; and (2) a small-volume, CO_2-enriched stream from the Redox for storage or beneficial use. In addition, the system will use a cost-effective, abundant, iron-based OC. With the presence of water vapor in the CLC system, iron-based OCs show moderate reactivity and capacity, as well as a high resistance to water vapor, ash, and attrition.

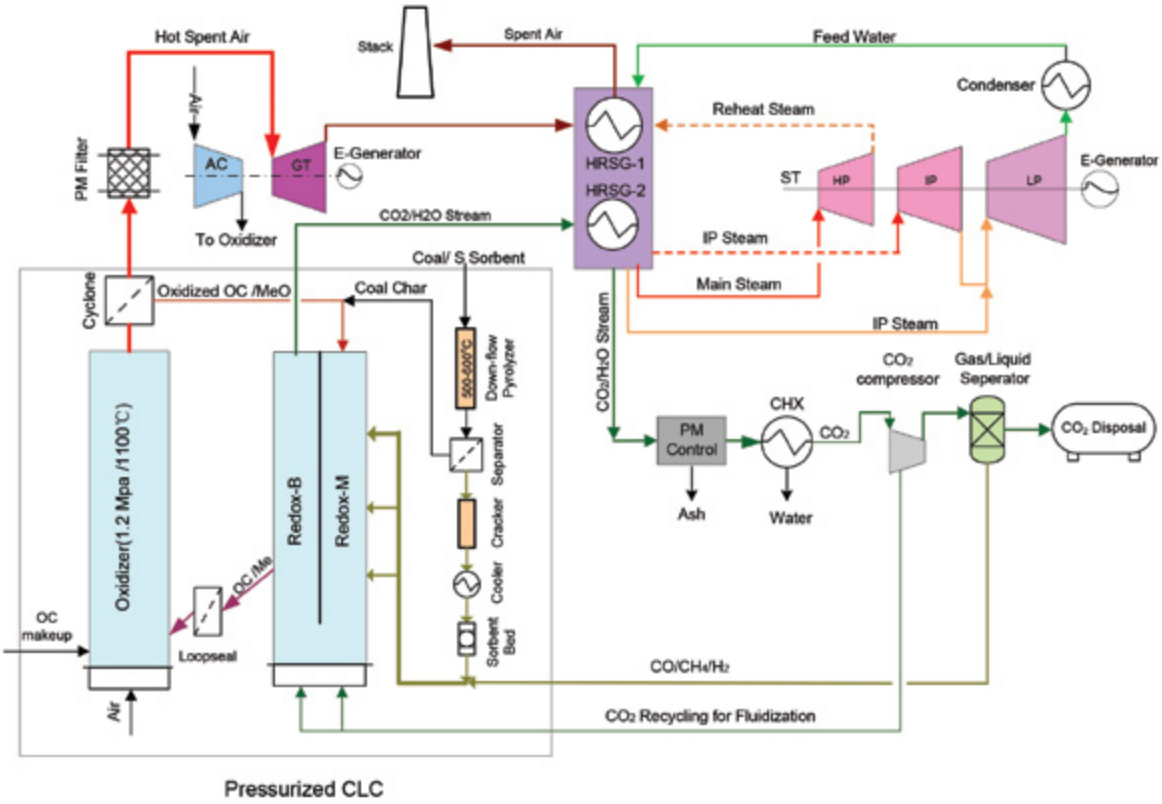

Figure 1: The PCLC Process Under Development

Additionally, the system will address known technical obstacles that impede the application of CLC to solid fuels by including: (1) the use of pulverized coal (PC) to increase reaction kinetics and facilitate separation of the spent OC from the solid coal residues (ash/carbon); (2) the use of a moderate-temperature pyrolyzer to suppress carrier agglomeration and reduce pollutants (≈96 percent of the mercury [Hg] and portions of the sulfur and alkali); and (3) division of the Redox into two chambers, a down-flow moving bed acting as a gasifier and a partial-reduction reactor for the OC, and a low-velocity bubbling bed serving as a deep-reduction reactor and a device for separating the reduced OC from the solid coal residues on the basis of density and particle size. Flue gas from the Redox (primarily CO_2 and H_2O with a limited quantity of CO and hydrogen [H_2]) will be compressed to the CO_2 critical point at which the H_2O, carbon monoxide (CO), and H_2 are removed, leaving a concentrated CO_2 stream (>95%). Heat transfer units are not needed in the Oxidizer or Redox, thereby avoiding the corrosion and erosion associated with heat-transfer surfaces.

technology advantages

- Simplicity with only one solid recirculation loop (a fast bed as oxidizer and a moving/bubbling bed as reducer and OC/ash separator).
- A relatively small volume of coal impurity-contaminated gas produced in the Redox M/B that is less costly to treat.
- Flue gas turbine combined cycle that eliminates the need to install heat-transfer surfaces inside pressure vessels for temperature control, thereby eliminating their associated corrosion/erosion problems.
- A cost-effective, iron-based OC produced from an industrial waste stream.
- Reduced reactor size and lower power requirements for compression of the enriched-CO_2 stream due to the elevated operation pressure (1.7 MPa).

R&D challenges

- Cost-effective, iron-based OCs to compensate for the large makeup rate due to the OC attrition and de-activation by coal impurities.
- Reaction kinetics improvement for oxidation and reduction of iron-based OC to reduce solid inventory and reactor size.
- High conversion of solid fuel and near-complete combustion of gaseous products from solid fuel in-situ gasification to improve coal conversion (combustion) efficiency and to lower down-stream cost for separation gaseous fuel from the CO_2 stream.
- Effective separation of OC particles from mixtures of OCs and solid fuel ash.
- Systems to control and monitor gas-solid flow, reaction, and energy distribution in the two reactors under elevated pressure.
- Effective pollutant removal in the Redox to avoid sulfur/nitrogen oxides (NO_x)/alkaline metal/mercury accumulation in the system.
- Integration of high-quality energy from CO_2 stream into HRSG-steam turbine system.
- Cost-effective technology to produce appropriate OCs with particle size between 200 to 500 µm.

results to date/accomplishments

- The University of Kentucky developed rate-based reactor models for the PCLC of coal that were integrated into the ASPEN model for the 550-MWe simulation based on the UK-CAER and Southeast University (China) bench- and pilot-scale experimental results.
- The Technology Engineering Design Interim Report for the proposed 550-MWe integrated PCLC combined-cycle process was completed.
- Process and major components designed for pilot scale ($200kW_{th}$) for proposal to the next research phase.

next steps

- The technical and economic analysis for the proposed combined cycle will be completed.
- Technology gap analysis will be performed.

available reports/technical papers/presentations

Liu, K., "Solid-Fueled Pressurized Chemical Looping with Flue-Gas Turbine Combined Cycle for Improved Plant Efficiency and CO_2 Capture," Kickoff Meeting presentation, Pittsburgh, Pennsylvania, October 2012. *http://www.netl.doe.gov/File%20Library/Research/Coal/ewr/co2/FE0009469-kickoff-caer.pdf*.

NOVEL OXYGEN CARRIERS FOR COAL-FUELED CHEMICAL LOOPING COMBUSTION

technology maturity:
Laboratory-Scale

project focus:
Novel CLC Oxygen Carriers

participant:
Western Kentucky University

project number:
FE0001808

NETL project manager:
Bruce Lani
bruce.lani@netl.doe.gov

principal investigator:
Wei-Ping Pan
Western Kentucky University
wei-ping.pan@wku.edu

partners:
None

performance period:
12/01/09 – 11/30/12

primary project goals

Western Kentucky University (WKU) set out to develop a series of advanced oxygen carriers for chemical looping combustion (CLC). The development of the advanced oxygen carriers focused on improving their overall physical and chemical characteristics and testing them in an actual CLC facility.

technical goals

- Develop attrition-resistant and thermally stable oxygen carriers to achieve an auto-thermal heat balance of the processes for generating high-purity carbon dioxide (CO_2) with favorable kinetics.
- Evaluate the impacts of scale-up methods and application of inexpensive raw materials (copper [Cu]-based minerals and widely available inexpensive clays) for preparation of oxygen carriers on reaction performance in testing within hot-model conditions.
- Prepare multi-metal or free-oxygen-releasing oxygen carriers and explore their optimal formula and reaction mechanisms.
- Evaluate the adaptability of prepared oxygen carriers to diversified coal types in the hot-model tests and investigate methods for eliminating carbon deposits on oxygen carriers.

technical content

WKU set out to develop a series of advanced oxygen carriers for coal-fueled CLC. CLC is a flameless combustion technology where there is no direct contact between air and fuel. The CLC process utilizes oxygen from metal oxide oxygen carriers for fuel combustion. The products of CLC are CO_2 and water vapor (H_2O). Thus, once the steam is condensed, a relatively pure stream of CO_2 is produced ready for storage. The many benefits of this combustion process include minimizing production of oxides of nitrogen (NO_x) and production of a CO_2 stream ready for storage that does not require additional CO_2 separation units; thus, there is no energy penalty or reduction in power plant efficiency.

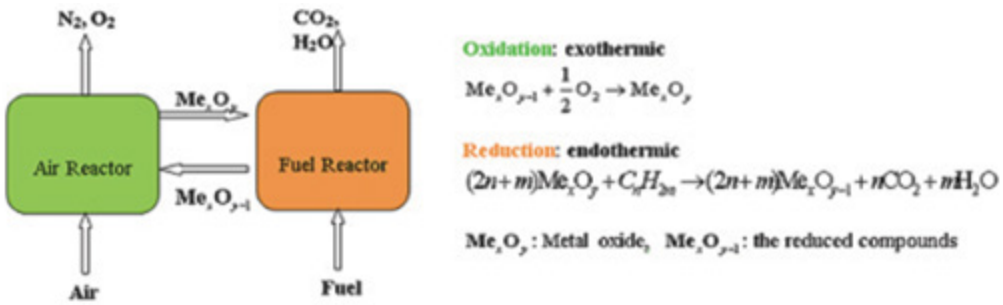

Figure 1: Conceptual Schematic of CLC

Oxygen carriers are composed of two major constituents: the reactive constituents and the supporting materials (substrates). Of the various metal oxides that can potentially be used as the reactive constituents for CLC, Cu-based oxygen carriers are promising, low-cost candidates that were evaluated in this project. WKU investigated four categories of Cu-based oxygen carriers on two different substrates (aluminum oxide [Al_2O_3] and titanium oxide [TiO_2]) by screening chemical formulas, investigating preparation methods, and characterizing the carriers using thermogravimetric analysis (TGA) and temperature program reduction methods.

Various analysis techniques were utilized to evaluate the oxygen carriers. Scanning electron microscopy with energy dispersive X-ray spectroscopy was used for morphology characterization. Phase transformation was identified by X-ray diffraction. The surface area and pore size distribution were evaluated via Brunauer-Emmett-Teller analysis. The temperature-programmed reduction technique provided the loading capacity and kinetics analysis of the oxygen carriers. The strength of the oxygen carriers was evaluated using the American Society for Testing and Materials attrition test.

One Cu-based oxygen carrier, using activated Al_2O_3 as supporting material, was selected for evaluation in a scale-up facility. A CLC process model was developed to optimize the performance of the selected oxygen carrier. The development of the advanced oxygen carrier focused on improving the oxygen-transfer capability, achieving favorable thermodynamics to generate high-purity CO_2, increasing the reactivity, increasing the attrition resistance, improving the thermal stability in reduction-oxidation (redox) cycles, and achieving an auto-thermal heat balance. The final formulation of the selected oxygen carriers was evaluated in a 10 kilowatt (kW) integrated coal-fueled CLC facility.

technology advantages

Copper-based oxygen carrier maintained good reactivity and largely minimized agglomeration.

R&D challenges

- Attrition loss of active ingredient (Cu).
- Oxygen releasing performance and thermal stability of the CuO on Al_2O_3 oxygen carrier.

results to date/accomplishments

- Three categories of Cu-based oxygen carriers were prepared using Al_2O_3 as the substrate. A fourth category of Cu-based oxygen carrier was prepared using TiO_2 as the substrate.
- The oxygen carriers were evaluated to understand morphology, phase transformation, surface area, pore size, loading capacity, conversion rate, kinetics, and strength.
- The chemical formula and preparation method of one Cu-based oxygen carrier, using activated Al_2O_3 as supporting material, was selected for scale-up. This carrier was finalized following TGA testing for more than 864 redox cycles, and successfully passed the durability and kinetics evaluations in a bench-scale, fixed-bed setup.
- The flow dynamics of solid recirculation without gas leakage between the air and fuel reactors were studied in a 10-kW equivalent cold-model CLC facility.
- The selected Cu-based oxygen carrier was tested in a scaled-up, 10-kW coal-fueled CLC facility for eight hours per day for three days.
- The testing demonstrated that the preparation method of the Cu-based oxygen carrier not only helps to maintain its good reactivity, but also largely minimizes its agglomeration tendency.

next steps

This project ended on November 30, 2012.

available reports/technical papers/presentations

Pan, W. P. and Cao, Y. "Recovery Act: Novel Oxygen Carriers for Coal-fueled Chemical Looping," Western Kentucky University Final Technical Report, DOE Project DE-FE0001808, February 2013.

DEVELOPMENT OF COMPUTATIONAL APPROACHES FOR SIMULATION AND ADVANCED CONTROLS FOR HYBRID COMBUSTION-GASIFICATION CHEMICAL LOOPING

primary project goals

Alstom set out to develop advanced computational models and optimizing control systems for chemical looping processes.

technical goals

- Identify sensor and control needs for chemical looping processes.
- Develop process simulation models with dynamic capability to evaluate control methods.
- Incorporate advanced process controls into the chemical looping plant design process.
- Investigate advanced process controls for complex solids flow and gas pressure control.
- Develop a control system design concept for the chemical looping prototype facility.

technical content

Alstom set out to develop advanced computational models and optimizing control systems for chemical looping processes, such as the hybrid combustion-gasification process shown in Figure 1. Chemical looping is a two-step process which first separates oxygen (O_2) from nitrogen (N_2) in an air stream in an air reactor. The O_2 is transferred to a solid oxygen carrier. The oxygen is carried by the solid oxide and is then used to gasify or combust solid fuel in a separate fuel reactor. As shown in Figure 1, a metal or calcium material (oxygen carrier) is burned in air forming a hot oxide (MeOx or CaOx) in the air reactor (oxidizer). The oxygen in the hot metal oxide is used to gasify coal in the fuel reactor (reducer), thereby reducing the oxide for continuous reuse in the chemical looping cycle.

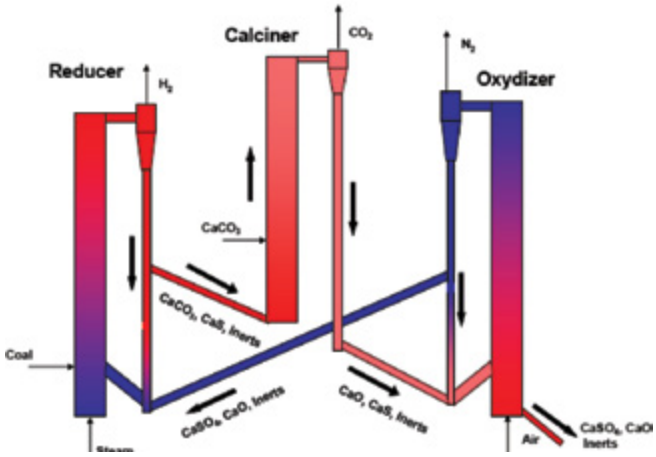

Figure 1: Alstom's Hybrid Combustion-Gasification Process

technology maturity:

Laboratory-Scale

project focus:

Chemical Looping Simulation and Control

participant:

Alstom Power

project number:

FC26-07NT43095

NETL project manager:

Susan Maley
cusan.maley@netl.doe.gov

principal investigator:

Carl Neuschaefer
Alstom Power
carl.h.neuschaefer@power.alstom.com

partners:

Taft Engineering, Inc.
University of Illinois Urbana-Champaign (UIUC)

performance period:

7/12/07 – 7/31/12

Chemical looping is applicable to both new and retrofit plants and has the flexibility to be designed in a number of configurations. The reactor can be operated in a partial combustion mode, to generate a carbon monoxide (CO)-rich synthesis gas (syngas) which in another variant can be shifted to produce hydrogen (H_2). Alternately, it can operate in full combustion mode, resulting in exhaust of carbon dioxide (CO_2) and water. The three main configurations are: Option 1, chemical looping combustion with CO_2 capture; Option 2, chemical looping gasification with downstream CO_2 capture; and Option 3, chemical looping gasification to produce H_2 with inherent CO_2 capture.

Chemical looping is a process with multiple material and energy streams inter-connected between the multiple reactors. In order to obtain and maintain optimal conditions for operation with reduced waste stream volume and minimum required energy, advanced optimizing control systems are required. As such, process control development is needed to operate the system in a safe, integrated, and optimized fashion and is viewed as critical for enhancing the performance of the chemical looping system. This project worked to develop model-based controls that can be used to operate the system. Approaches to model development and control algorithms were developed by researchers at Alstom and the University of Illinois Urbana-Champaign (UIUC).

Alstom worked to develop computational models to gain a better understanding of the chemical looping process behavior and to develop control strategies, including: a two-loop, cold flow model; a dual-loop, hot flow model (without reactions); and a real-time, dual-loop simulator. The dual-loop simulation platforms are configured to test conceptual control designs. For example, it was used to investigate both linear and non-linear control concepts and evaluate control strategies with different sensors and actuators. In addition to working to develop process models and advanced controls applications, Alstom also worked on advanced sensors, such as the ultrasonic-time of flight and the image-based, laser-light spot and triangulation prototype level sensors.

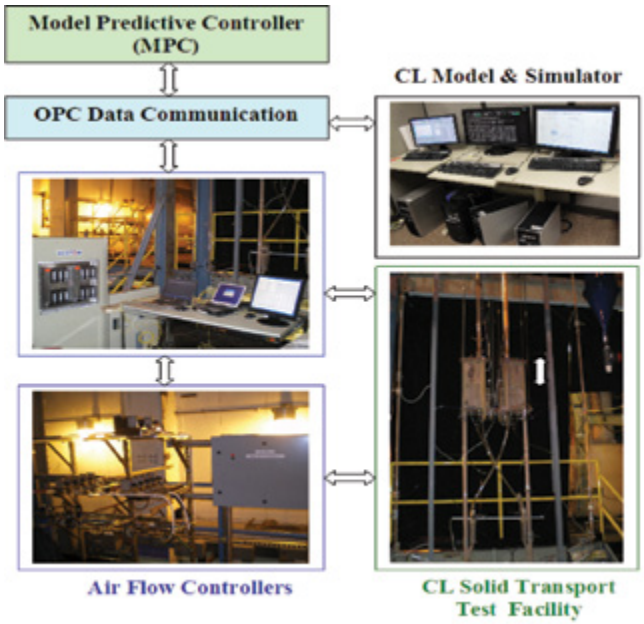

Figure 2: Experimental Facility Control Testing

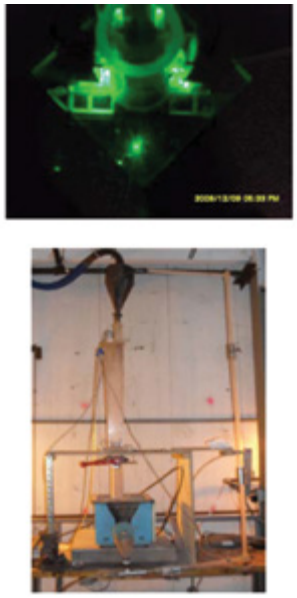

Figure 3: Sensor Testing

technology advantages

Power plants using conventional circulating fluidized bed or transport reactor technology do not require sophisticated control since there is only a single, uncontrolled recycle loop. However, it is anticipated that power plants using a chemical looping process that has more complex multi-loop controlled solids circulating and transfer loops will require more sophisticated and demanding process control systems to optimize operations and reliability. The overall advantage is to develop advanced multivariable optimizing controls integrated early into the process development cycle to ensure a plant level design that is more controllable and reliable.

Advanced control systems for chemical looping will provide for more stable and continuous operation of the process, thus enabling high efficiency, high reliability, low environmental impact, and reduced costs. Project investigations have shown that traditional controls are more subject to interactions and disturbances, and hence less robust to maintaining stable loop control when compared to model-based control of the same system, suggesting that this approach may be essential for reliably operating multiple cross-flowing loops together in a continuous manner.

R&D challenges

Challenges included the development of real-time, fast, and dynamically accurate response models for use in simulation and dynamic control of the chemical looping multi-loops, followed by the inclusion of new measured control variables and reliable instrumentation as input into the model-based control. Additional challenges were to scale-up the computational models and simulation tools and integrate the advanced controls with the scale up of the chemical looping process from the current laboratory scale to a commercial demonstration-size unit. This included consideration of the appropriate process dynamics, chemical reactions, and externalities so the control can account for a large number of variables and the changes in process dynamics at the larger size units that will impact stable loop control.

results to date/accomplishments

- Developed process and control performance benchmarks.
- Completed process characterization by developing an understanding of the dynamic operation and control issues at the cold flow and chemical looping test facilities.
- Completed process modeling and simulation.
- Validated chemical looping process models.
- A two-loop, cold flow model has been validated with extensive test data.
- A real-time, dual-loop cold flow simulator has been developed to test control designs.
- A hot-loop model (without reactions) has been developed and parameterized using data from the chemical looping process development unit (PDU) test facility.
- The dual-loop simulation platform was completed and was used to evaluate different control strategies with various sensors and actuators.
- Conceptual proportional-integral-derivative (PID) control and model predictive control (MPC) designs have been completed and tested with the simulator.
- A real-time linear MPC controller was deployed and tested on the 15-foot, dual-loop facility with stable dual-loop dynamic operations achieved.
- A wavelet model based controller was designed by UIUC and tested on Alstom's 15-foot test facility.
- Partial Differential Equation (PDE)-based control methodology was evaluated by UIUC using dynamic simulations; a linearized PDE-based controller was implemented and tested on Alstom's 15-foot test facility.
- Initiated scale-up modeling and simulation of a larger cold flow solids transport test facility.
- Completed further scale-up to develop dynamic models and multi-loop simulations for the 3-MWth chemical looping prototype test facility developed by Alstom under DOE/NETL project No. DE-NT0005286.
- Evaluated a nonlinear model predictive control (NMPC) design based on the development of an initial reduced order model (ROM) for dual-loop prototype chemical looping controls.
- Completed evaluation of advanced sensors. Both solids level and the two-phase mass flow sensor candidates were evaluated and ranked for chemical looping service. The evaluation confirmed that a direct measurement of both level and mass flow rate was feasible and would significantly aid in the process control. Soft sensing based on the measurement of differential pressures has also been investigated. Microwave-level sensor was installed on pilot-scale system.

next steps

This project ended on July 31, 2012.

available reports/technical papers/presentations

The 33rd International Technical Conference on Coal Utilization & Fuel Systems, Clearwater, Florida, USA, June 1-5, 2008, "Simulation and Advanced Controls for Alstom's Chemical Looping Process," Xinsheng Lou, Carl Neuschaefer, and Hao Lei.

51st ISA Power Industry Division Symposium & 18th Annual Joint ISA POWID/EPRI, Controls & Instrumentation Conference, Scottsdale, Arizona, USA, June 8-13, 2008, "Simulation and Advanced Controls for Hybrid Combustion-Gasification Chemical Looping Process," Xinsheng Lou, Carl Neuschaefer, and Hao Lei.

International Pittsburgh Coal Conference, Pittsburgh, PA, USA, September 21-24, 2009 "Dynamic Simulation and Advanced Controls for Alstom's Chemical Looping Process," Xinsheng Lou, Carl Neuschaefer, Hao Lei, and Abhinaya Joshi.

Modelling, Controller Design, and Computational Tools for the Closed-Loop Control of the Cold Flow Fluidized Bed Rise, submitted to the journal of Nonlinear Phenomena in Complex Systems by UIUC Dong Ye, Shu Zhang, Vivek Natarajan, Bryan Petrus, and Joseph Bentsman.

An invited presentation on this project was given by Carl Neuschaefer at the workshop on advanced controls organized by DOE/NETL aligned with 2008 ISA Power Conference in Scottsdale, Arizona, USA.

2010 International Pittsburgh Coal Conference, Istanbul, Turkey, October 11-14, 2010, "Development of Real-time Dynamic Simulation of Chemical Looping Process for Advanced Controls," Hao Lei, Xinsheng Lou, Abhinaya Joshi, and Carl Neuschaefer.

An invited presentation on this project was given by Dr. Xinsheng Lou at the workshop on advanced sensor and controls organized by DOE/NETL and EPRI aligned with 2012 ISA Power Conference in Austin, Texas, USA.

2011 International Pittsburgh Coal Conference, Pittsburgh, Pennsylvania, September 12-15, 2011.

Modeling, "Simulation and Advanced Controls for 3-MW Prototype Chemical Looping Process," Abhinaya Joshi, Xinsheng Lou, and Carl Neuschaefer.

2011 International Pittsburgh Coal Conference, Pittsburgh, PA, September 12-15, 2011 "Solids Transport Instrumentation Level and Mass Flow Rate," Majid Chauhdry and Joe Quinn.

51st IEEE Conference on Decision and Control, Maui, Hawaii, USA, December 10-13, 2012.

"Wavelet Multi-resolution Model Based Generalized Predictive Control for Hybrid Combustion-Gasification Chemical Looping Process (I)," Shu Zhang, Joseph Bentsman, Xinsheng Lou, Carl Neuschaefer.

APPENDIX B: CARBON DIOXIDE CAPTURE TECHNOLOGY SHEETS

ADVANCED COMPRESSION

NOVEL CONCEPTS FOR THE COMPRESSION OF LARGE VOLUMES OF CO_2

technology maturity:
Pilot-Scale, 90 tonnes/hr

project focus:
Evaluation of Compression Efficiency Improvements

participant:
Southwest Research Institute

project number:
FC26-05NT42650

NETL project manager:
Travis Shultz
travis.shultz@netl.doe.gov

principal investigator:
Jeffery Moore
Southwest Research Institute
jeff.moore@swri.org

partners:
Dresser-Rand

performance period:
9/28/05 – 12/31/13

primary project goals

Southwest Research Institute (SwRI) is developing novel compression technology concepts to reduce carbon dioxide (CO_2) compression power requirements by 10 percent compared to conventional compressor designs. The basic concept is a semi-isothermal compression process where the CO_2 is continually cooled using an internal cooling jacket rather than using conventional interstage cooling. The project has completed thermodynamic (Phase I) and prototype testing (Phase II). A full-scale demonstration of a multi-stage, internally cooled diaphragm pilot test program (Phase III) is well underway.

technical goals

Phase III

- Design and construct a pilot-scale demonstration of a multi-stage internally cooled compressor diaphragm design.
- Complete a comprehensive thermodynamic and cost analysis of both pulverized coal (PC) and integrated gasification combined cycle (IGCC) plant incorporating the new compression technology.
- Design a multi-stage diaphragm and test loop.
- Design, fabricate, and test a third-generation cooled diaphragm and test in a single-stage test rig.

technical content

In the cooled diaphragm concept, the gas is continually cooled after each stage in the flow path through the compressor. A cooling jacket insert is used in the diaphragm of each stage to provide continuous cooling. Figure 1 shows a conceptual design for an internally cooled compressor. The flow of the CO_2 is shown in red, while the cooling liquid is shown in blue.

SwRI examined a number of different compression options to find the ones that would consume the least amount of power. Figure 2 shows how two hypothetical compression processes can achieve the same pressure, but still consume different quantities of power. The isothermal compression, even at 60 percent efficiency, requires less power than the isentropic compression at 100 percent efficiency. Therefore, efficiency alone cannot be used as a figure of merit for the compression process.

Figure 3 shows the pressure/enthalpy curves for six of the options examined by SwRI. While liquefaction and pumping is a viable option and may be superior to a pure compression route in cold climates, the semi-isothermal compression proved to be superior when all of the heat exchanger performance and other losses were taken into account.

Table 1 presents a description of the compression and cooling technology options and the resultant power requirements for the U.S. Department of Energy (DOE) 550-megawatt (MW) PC reference power plant with carbon capture using an amine process (≈1.3 million lb/hr CO_2 stream). The results show an almost 10 percent power savings when using the cooled diaphragm technology over a conventional inline compressor, and even shows

greater performance than an integrally geared compressor for higher ambient temperatures (not shown). The integrally geared compressor contains eight stages, while the inline compressor represents 13 stages (6/7) between the two bodies. The cooled diaphragms are modeled with different heat exchanger effectiveness values. Values between 15 and 30 percent were measured in the Phase II single-stage test program, depending on the operating condition. The second-generation design for the multi-stage cooled diaphragm is predicted to be in the 15 to 20 percent range. A third-generation concept is currently under development with the goal of greater than 30 percent effectiveness. A final case shows the benefit of additional stages (7/8) on the cooled diaphragm performance. Representative stage efficiencies were used from actual selections in both cases and gearbox losses are taken into account where appropriate. Through the Phase III development program, a high-pressure version of the cooled diaphragm has been developed, making it viable in both the low- and high-pressure compressor bodies.

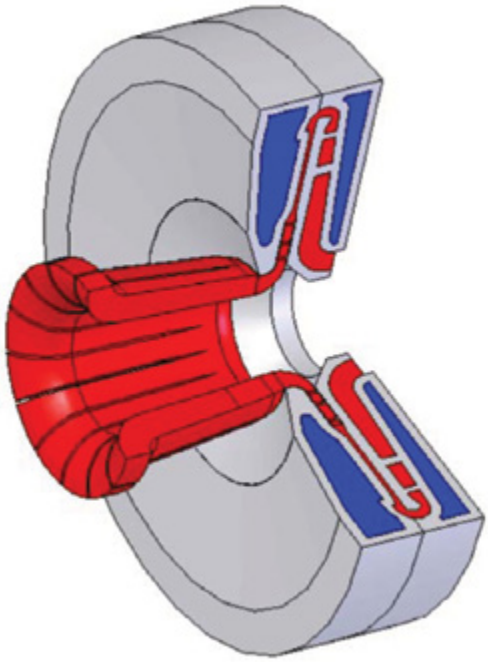

Figure 1: Design for an Internally Cooled Compressor

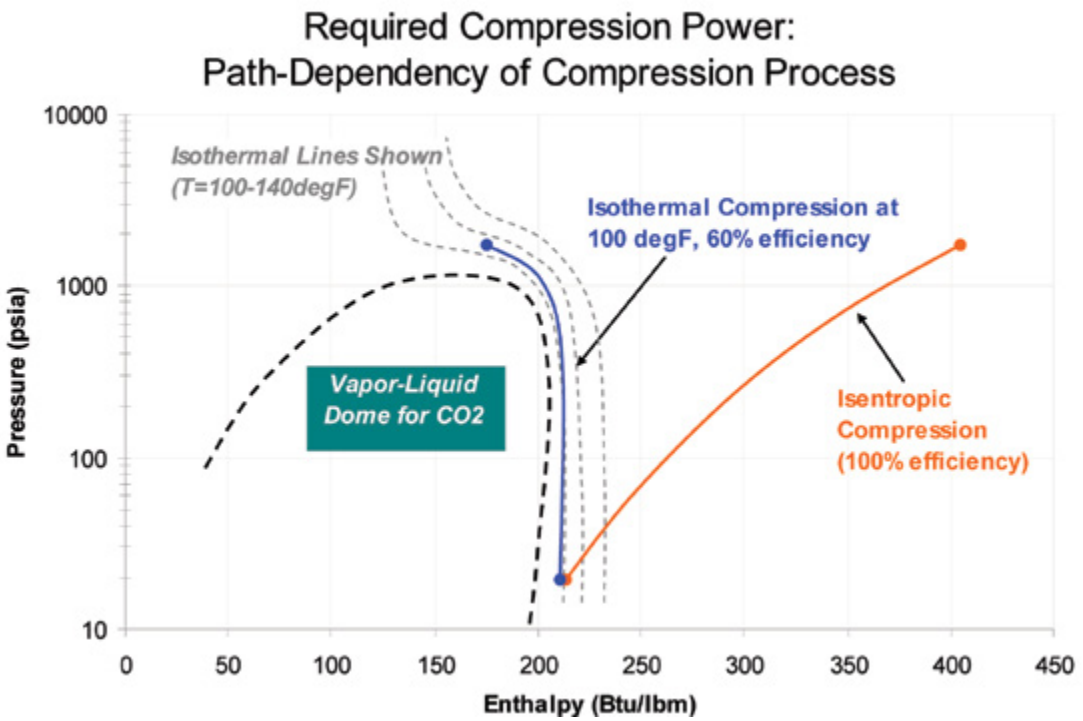

Figure 2: Example of Path Dependency of Compression Power

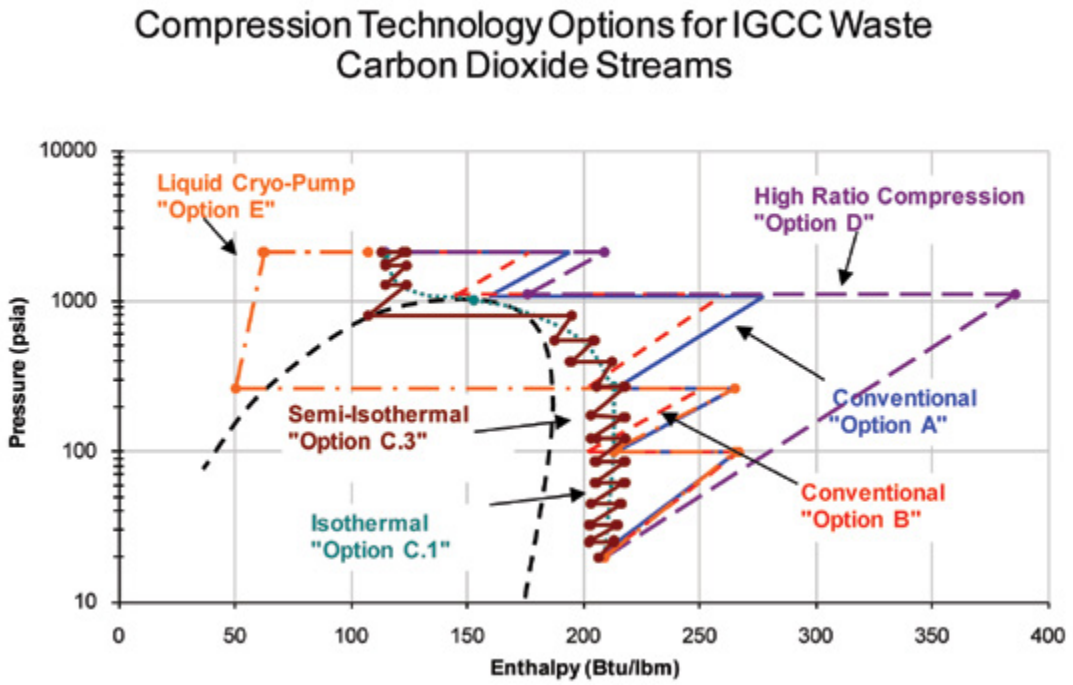

Figure 3: Required Compression Power for the Investigated Technology Options

TABLE 1: SUMMARY OF COMPRESSOR PREDICTIONS FOR DOE REFERENCE PC PLANT WITH CARBON CAPTURE

Configuration	Compression Power (MW)	Total Plant Power (MWe)	% of Power for CO_2 Compression	% Power Reduction From Cooled Diaphragms[2]
8-Stage Integrally Geared Centrifugal	56.3	550	10.2%	-
6/7-Stage Inline Centrifugal	63.9	550	11.6%	-
6/7-Stage Inline Centrifugal w/15% Effective Cooled Diaphragms	62.0	550	11.3%	3.0%
6/7-Stage Inline Centrifugal w/25% Effective Cooled Diaphragms	60.7	550	11.0%	5.0%
6/7-Stage Inline Centrifugal w/35% Effective Cooled Diaphragms	59.5	550	10.8%	6.9%
8/9-Stage Inline Centrifugal w/35% Effective Cooled Diaphragms	58.1	550	10.6%	9.1%

Figure 4 shows a photograph of the internally cooled compressor diaphragm from the Phase II program, which routes cooling fluid through the diaphragm to remove the heat of compression. This prototype was installed into a closed-loop compressor test facility at SwRI and tested for a range of speeds, flows, pressures, and cooling fluid conditions. The testing agreed with computational fluid dynamics (CFD) predictions for the heat transfer characteristics. Figure 5 shows a comparison between measured and predicted heat exchanger effectiveness for the diaphragm, which shows good agreement. Unlike external heat exchangers, no additional pressure drop occurs between stages.

Under the Phase III effort, the design of the new test loop and multi-stage compressor diaphragms is complete. Manufacturing is underway on the compressor package being supplied by Dresser-Rand and is scheduled to arrive at SwRI in late June 2013. Procurement of all hardware for the test loop is underway and will be installed in time for the compressor arrival. Commissioning and testing of the unit will be carried out through the remainder of the year.

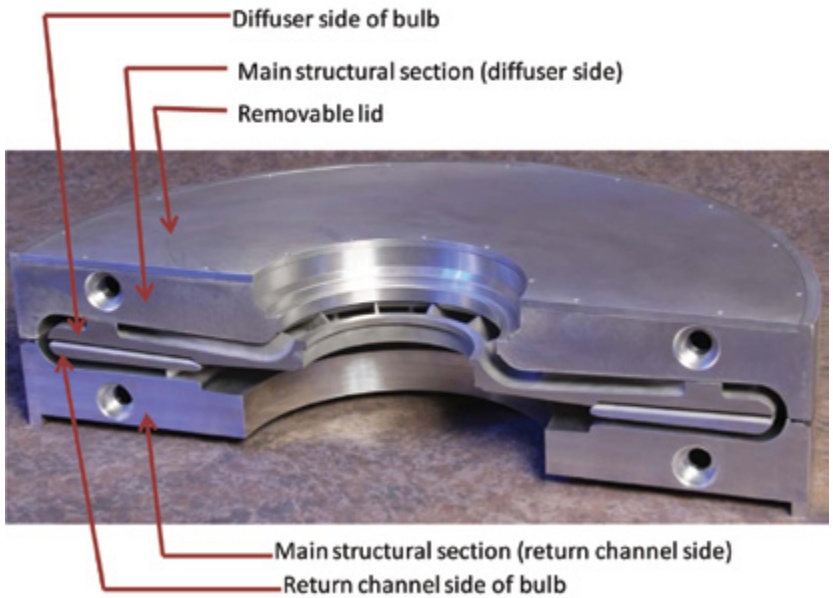

Figure 4: Internally Cooled Compressor Diaphragm

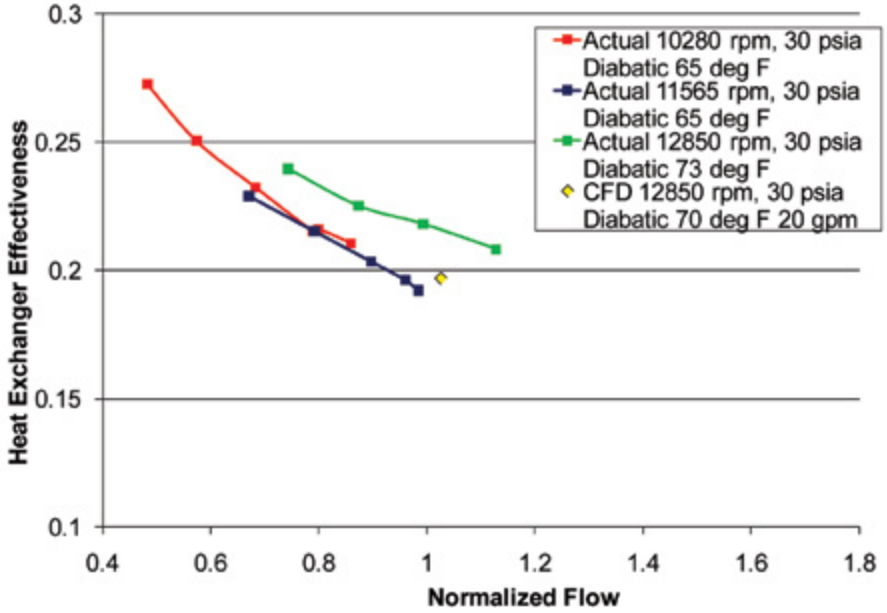

Figure 5: Heat Transfer Effectiveness of CFD and Test Results

technology advantages

- New compression process could use up to 10 percent less power compared to commercially available inline centrifugal compressors.
- Applicable to all types of power plants, including PC, IGCC, and oxy-fuel.
- Could result in significant capital savings and reliability improvement compared to an integrally geared compressor.
- Inline compressors are scalable to large power plants, and their reliability is well proven in LNG and Ethylene service.

R&D challenges

- There will be a wide range of CO_2 output from the power plant based on required electrical output.
- Carbon dioxide compression technology must have high reliability.
- IGCC plants contain multiple CO_2 streams at different pressures.
- The volume reduction during the compression can exceed 500:1.

results to date/accomplishments

- Development complete of multi-stage internally cooled diaphragm.
- Detailed design of Dresser-Rand DATUM compressor with multi-stage cooled diaphragms is complete.
- Design of a closed loop to test back-to-back compressor is complete.
- All long-lead hardware items have been placed on order.

next steps

- Installation of major equipment.
- Measurement of the CO_2 baseline compressor performance (no cooling).
- Measurement of the CO_2 compressor performance with diaphragm cooling.
- Perform a third-generation cooled diaphragm test in single-stage test rig.
- Final test results will not be available until the first quarter of 2014.

available reports/technical papers/presentations

Moore, J.J.; et al., "Advance Centrifugal Compression and Pumping for CO_2 Applications," presented at the 2012 NETL CO_2 Capture Technology Meeting, July 2012. *http://www.netl.doe.gov/File%20Library/Events/2012/CO2%20Capture%20Meeting/J-Moore-SRI-CO2-Compression.pdf.*

Moore, J.J.; et al., "Novel Concepts for the Compression of Large Volumes of CO_2," presented at the 2010 NETL CO_2 Capture Technology Meeting, Pittsburgh, Pennsylvania, September 2010. *http://www.netl.doe.gov/File%20Library/Research/Coal/ewr/co2/Jeffery-Moore---NT42650.pdf*.

Moore, J.J.; et al., "Novel Concepts for the Compression of Large Volumes of CO_2 – Phase II," presented at the Annual NETL CO_2 Capture Technology for Existing Plants R&D Meeting, Pittsburgh, Pennsylvania, March 2009. *http://www.netl.doe.gov/publications/proceedings/09/CO2/pdfs/42650%20Southwest%20Research%20compression%20%28Moore%29%20mar09.pdf*.

THERMAL INTEGRATION OF CO_2 COMPRESSION PROCESSES WITH COAL-FIRED POWER PLANTS EQUIPPED WITH CARBON CAPTURE

technology maturity:
Systems Analysis Models

project focus:
Thermal Integration of CO_2 Compression

participant:
Lehigh University

project number:
FE0002146

NETL project manager:
Robert Noll
robert.noll@netl.doe.gov

principal investigator:
Edward Levy
Lehigh University
ekl0@lehigh.edu

partners:
none

performance period:
10/1/09 – 6/29/12

primary project goals

Lehigh University set out to use systems analysis models to study the benefits of improved thermal integration for coal-fired power plants equipped with post- or oxy-combustion carbon dioxide (CO_2) capture systems.

technical goals

- Gather technical and performance information from compressor manufacturers and the technical literature in order to calculate compressor power requirements, performance of interstage heat exchangers, and interstage pressure drops.
- Develop and validate ASPEN Plus models of coal-fired power plants with solvent-based post-combustion CO_2 capture to simulate the effects of different thermal integration options on power plant efficiency and net power output.
- Develop and validate ASPEN Plus models of oxy-combustion coal power plants to simulate the effects of different thermal integration options on power plant efficiency and net power output.

technical content

Coal-based power plants equipped for CO_2 capture require a compression system to increase the pressure of the CO_2 to the level needed for geological storage (approximately 2,200 pounds per square inch absolute [psia]). In addition to its relatively high capital cost, the CO_2 compression system requires a significant amount of auxiliary power for operation. The technology options available for CO_2 compression include:

- A multistage, in-line centrifugal compressor with interstage and post-compression cooling.
- A multistage, integrally geared centrifugal compressor with interstage cooling.
- A multistage, supersonic shock wave compressor with interstage and post-compression cooling.
- A compression process involving gas phase compression to approximately 200 psia, cryogenic cooling through the two-phase region, and increase in pressure of the liquid CO_2 to the final pressure using a liquid cryogenic pump.

For some of these technology options, there is the potential for utilization of waste heat from the CO_2 compressors within the power plant. This project used first-principle engineering analyses and computer simulations to determine the increase in power output and improvement in net unit heat rate which could occur by thermal integration of the CO_2 compression process with the CO_2 capture system, boiler, and turbine cycle. The study

included gathering information on compressor type and compressor stage efficiencies. The aerodynamic conditions and the flow geometry change from the low-pressure to high-pressure end of the compressor typically result in variations in isentropic stage efficiency from inlet to outlet. Correct values for isentropic stage efficiency are needed in order to obtain realistic values of compressor power and CO_2 exit temperature for each stage; values of stage efficiency provided by compressor vendors were used in this project. In addition, analyses were performed to estimate CO_2 and cooling fluid stage exit temperatures as functions of coolant inlet temperature and flow rate. While the literature suggests that most CO_2 compressors are air-cooled, analyses were performed assuming the use of water-cooled heat exchangers for interstage cooling and effective utilization of compressor waste heat.

Results from the compressor simulations were linked to models of the power plant for analysis of various thermal integration options. The compressor and power plant simulations were performed using the ASPEN Plus software. Each of the following cases were analyzed using bituminous, Powder River Basin (PRB), and lignite coals:

- Pulverized coal-fired boiler with post-combustion, solvent-based capture systems using a generic monoethanolamine (MEA) scrubber.
- Oxy-combustion pulverized coal boiler.

The thermal integration options that were considered include pre-drying of low-rank coals, regeneration of CO_2 solvent, and boiler feedwater preheating. Table 1 presents the matrix of analyses that were performed.

TABLE 1: SYSTEMS ANALYSIS MATRIX FOR CO_2 COMPRESSION HEAT INTEGRATION

Use of Recovered Heat from CO_2 Compressor			
Integration Method	Pre-Dry Low-Rank Coal	Regenerate CO_2 Solvent	Preheat Boiler Feedwater
Post-Combustion Solvent-Based CO_2 Capture			
Bituminous	No	Yes	Yes
PRB	Yes	Yes	Yes
Lignite	Yes	Yes	Yes
Oxy-Combustion			
Bituminous	No	No	Yes
PRB	Yes	No	Yes
Lignite	Yes	No	Yes

technology advantages

- Determine the best way to utilize waste heat from CO_2 compression.
- Improve power plant efficiency and increase the net power output.
- Reduce capital and operating cost for CO_2 capture and compression systems.

R&D challenges

- Implementation of the thermal integration opportunities as cost-effective technology options.

results to date/accomplishments

- Completed compressor performance analyses.
- Completed analyses of the various thermal integration options for both the post- and oxy-combustion capture technologies. The results show that potential heat rate improvements are sensitive to the type of compressor, type of coal, and thermal integration option. In the case of oxy-combustion capture, the predicted reductions in heat rate range from 2.0 to 8.4 percent; for MEA post-combustion capture, they range up to 10.45 percent.

next steps

This project ended on June 29, 2012.

available reports/technical papers/presentations

Levy, E. "Thermal Integration of CO_2 Compression Processes with Coal-Fired Power Plants Equipped with Carbon Capture," Lehigh University Final Technical Report, DOE Project DE-FE0002146, October 2012.

Levy, E.; Jonas, G.; and Martin, E. "Thermal Integration of Waste Heat in Coal-Fired Units with Post-Combustion Carbon Capture," Proceedings 37th International Conference on Clean Coal and Fuel Systems, Clearwater, Florida, June 2012.

Levy, E.; Charles, J.; Jonas, G.; Aiken, E.; and Martin, E. "Thermal Integration of CO_2 Compression Heat to Improve Power Plant Heat Rate," Poster Presentation at 2012 NETL CO_2 Capture Meeting, Pittsburgh, Pennsylvania, July 2012.

Levy, E.; and Charles, J. "Use of Recovered CO_2 Compression Heat to Improve Heat Rates of Oxy-Fired Units," Proceedings Eleventh Annual Conference on Carbon Capture and Sequestration, Pittsburgh, Pennsylvania, May 2012.

Levy, E.; Charles, J.; Jonas, G.; Aiken, E.; and Martin, E. "Thermal Integration of CO_2 Compression Heat to Improve Power Plant Heat Rate," Poster Presentation at 2011 NETL CO_2 Capture Meeting, Pittsburgh, Pennsylvania, August 2011.

Levy, E.; Jonas, G.; and Zubernis, J. "CO_2 Compressors with Interstage Cooling for CCS Applications: Effects of Compressor Type," Proceedings 36th International Conference on Clean Coal and Fuel Systems, Clearwater, Florida, June 5-9, 2011.

Levy, E.; Martin, E.; Aiken, E.; and Charles, J. "Thermal Integration of Heat Captured From Compressor Intercoolers for Improved Unit Heat Rate," Proceedings Tenth Annual Conference on Carbon Capture and Sequestration, Pittsburgh, Pennsylvania, May 2-5, 2011.

RAMGEN SUPERSONIC SHOCK WAVE COMPRESSION AND ENGINE TECHNOLOGY

technology maturity:

Pilot-Scale,
1,680 Tonnes/Day CO_2

project focus:

Shock Wave Compression

participant:

Ramgen Power Systems

project number:

FE0000493
FC26-06NT42651

NETL project manager:

Travis Shultz
travis.shultz@netl.doe.gov

principal investigator:

Aaron Koopman
Ramgen Power Systems, LLC
akoopman@ramgen.com

partners:

Dresser-Rand

performance period:

5/10/2006 – 6/30/2014

primary project goals

Ramgen Power Systems is designing and developing a unique compressor technology based upon aerospace shock wave compression theory for use as a carbon dioxide (CO_2) compressor. A shock wave-based gas turbine engine is also being developed.

technical goals

Phase I

- Complete testing of a high-pressure ratio (8:1) air compressor rotor for the Ram 2 Program.
- Demonstrate the feasibility of high-pressure shock wave compression.
- Develop and detail a viable commercialization path.

Phase II

- Perform critical success factors risk reduction validation and test program to identify and reduce technical risk areas.
- Complete general design and demonstration of a CO_2 supersonic shock compressor approximately 13,000 hp in size.
- Complete design, build, and test of multiple engine builds to demonstrate supersonic shock compression and advanced vortex combustion in an engine embodiment.

technical content

Shock Wave CO_2 Compressor

Ramgen Power Systems is developing a supersonic shock wave compression technology, similar in concept to an aircraft's ramjet engine, for use in a stationary compressor. Ramgen's compressor design, known as a Rampressor, features a rotating disk that operates at high peripheral speeds to generate shock waves that compress the CO_2. Compared to conventional compressor technologies, shock compression offers several potential advantages: high compression efficiency; high, single-stage compression ratios; opportunity for waste heat recovery; and low capital cost. For example, Ramgen's shock compression has the potential to develop compression ratios from 2.0 to 15.0 per stage with an associated adiabatic efficiency of 85 to 90 percent. For CO_2 applications, Ramgen anticipates using a nominal, two-stage 100:1 compression ratio, featuring a matched pair of 10:1 compression stages with an intercooler located between the stages. Prototype testing completed in 2007 achieved a 7.8:1 compression ratio.

When shock waves pass through a gas, they cause a localized compression. Figure 1 shows that the rotating rotor rim has small, shallow angles which, when rotating at high speeds, will produce supersonic shock waves both prior to and post-peak. These shock waves, modeled in the 3-D Euler Computational Fluid Dynamics (CFD) image shown, are first oblique,

then normal. Additionally, strakes (ridges) are incorporated into the design of the rotor to form sidewalls. The strakes are utilized as shock compression ducts, as well as to separate high-pressure discharge from low-pressure suction. The combination of shocks and strakes result in a compressed fluid delivered from a stationary discharge duct with compression efficiencies comparable to conventional industrial turbo-compressors, but with much higher single-stage pressure ratios and therefore higher quality heat of compression that combine to deliver significant installed and operational cost savings versus existing turbo-compressors.

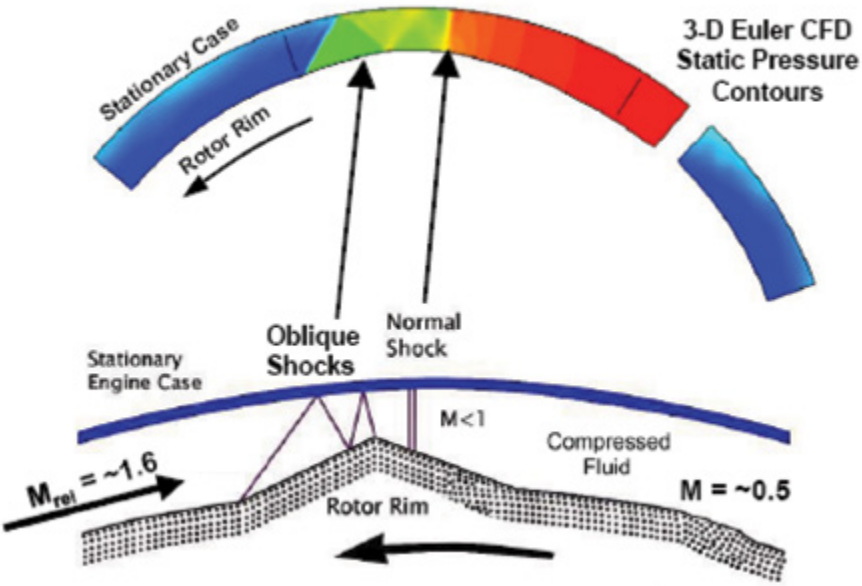

Figure 1: Schematic of Rotor Rim and Engine Case and 3-D Euler CFD Image Depicting Shock Wave Behavior

Two stages of compression are used with an intercooler located between the stages to optimize the efficiency of the compression process. Figure 2 shows the energy required as shaft work and the thermal energy lost to the cooling stream for a 200-MW coal plant with 90 percent CO_2 capture. The numbers found in the figure represent a stage in the process; each stage is driven independently through an external gearbox.

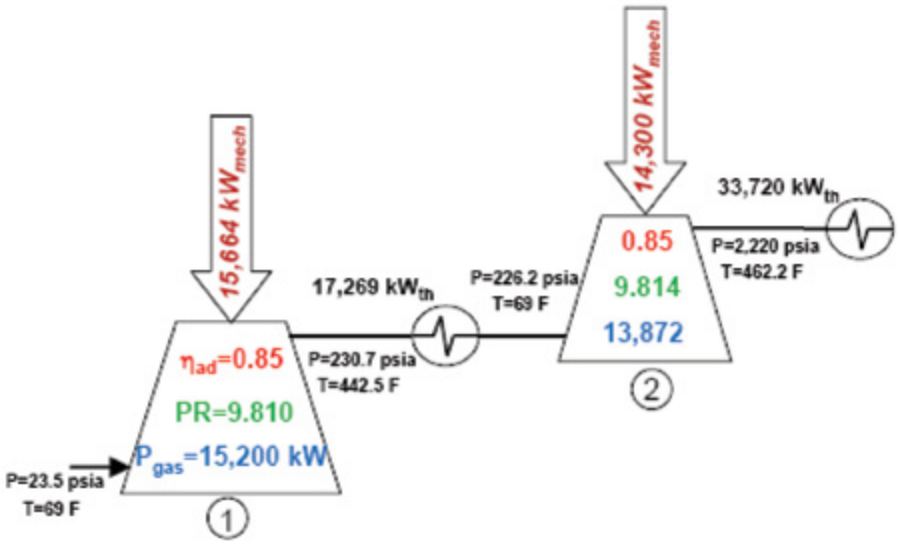

Figure 2: Series Process Schematic

As seen in Figure 2, the total shaft power is 29,964 kWmech, which corresponds to a heat of compression of 50,989 kWth. Approximately 28,986 kWth of the heat of compression lost is recoverable down to 93°C (200°F).

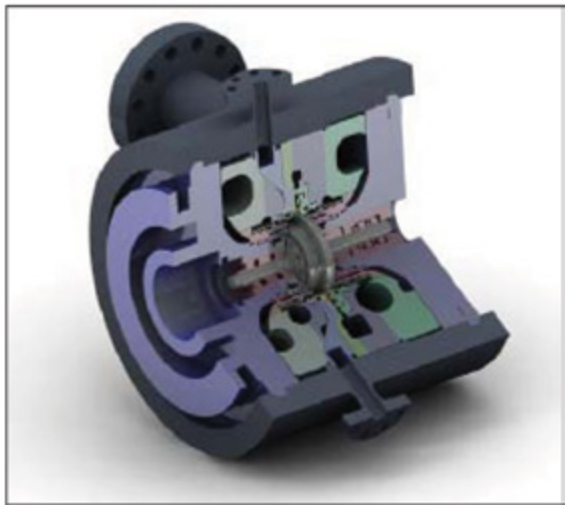

Figure 3: Cross Sectional Model of a 1/10th Scale Single-Stage Supersonic Shock Wave Compressor

Shock Wave Gas Turbine Engine

Ramgen is also developing a unique shock wave-based gas turbine engine that is expected to significantly improve energy efficiency. The Ramgen Integrated Supersonic Component Engine (ISCE) consolidates the compressor, combustor, and turbine of a conventional gas turbine into a single wheel that operates based on the same Brayton thermodynamic cycle as a conventional gas turbine; however, the mechanical implementation of the process is quite different. One important advantage is that because the compression, combustion, and expansion processes are all integrated into a single, constant speed rotor, there is no physical acceleration of the rotating components required as the system transitions from idle to full power. The output torque and power are modulated from the full-speed, no-load condition to the full-speed, full-power condition by adjusting the fuel flow. As a result, the system can transition from idle to full power as quickly as the fuel flow can be adjusted. Testing has demonstrated a transition from combustor heat release levels consistent with a power variation from idle (pilot fuel only) to full power (full fuel/air premix) in periods as short as 150 to 200 milliseconds (ms). The ISCE will have the ability to load follow from idle to full power in time scales as short as a few hundred ms compared with a response rate of 7 to 10 seconds for most intermediate-sized gas turbine electric power generating systems.

The initial proof of concept Ramgen engine used an un-shrouded rotor configuration mounted on a single high-speed shaft driving a generator/starter motor through a speed-reducing gearbox. The ISCE system will incorporate a fully shrouded flowpath power-wheel configuration. The reduced size of the components will result in a significantly more compact, lightweight, low-cost generation system compared to any other conventional turbo-generator system. One embodiment of this integrated power-wheel system is illustrated in Figure 4 and shows the engine feature of a propulsive flowpath that is fully shrouded and formed by a series of nested rim segments supported by a metal-matrix or polyimide composite outside diameter support ring.

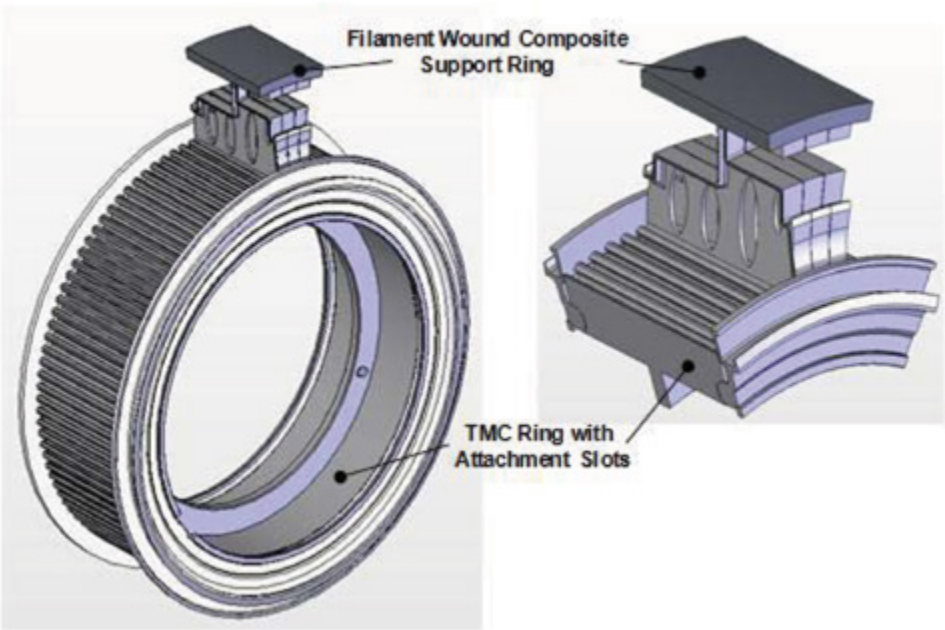

Figure 4: Cross Sectional Model of a 1/10th Scale Single-Stage Supersonic Shock Wave Compressor

technology advantages

- Competitive operating efficiency and reduced installed capital cost (approximately 50%) over multi-stage bladed turbo compressors.
- High-stage discharge temperature enables cost-effective recovery of heat of compression.
  - Improves carbon capture and sequestration (CCS) efficiency.
  - Reduces power plant de-rate.

R&D challenges

- Complicated shock wave aerodynamics on the flowpath requires intensive computing capabilities and model development.
- High rotational speeds and the resulting stresses can result in expensive rotor manufacturing techniques.
- High-pressure ratio compressors yield high rotor thrust loads on bearings and structure.

results to date/accomplishments

- ISCE final design completed.
- Full-speed test rotor runs completed.
- Carbon dioxide compressor and ISCE test (Build 1) equipment have initiated testing under full-speed operations.

next steps

Complete Build 2 compressor design.

- Complete Build 2 engine design.
- Complete Advanced Vortex Combustor sub-component design, build, and test.

- Improve understanding of the supersonic aerodynamics needed to achieve product performance levels in the CO_2 compressor and engine compressor.
- Continue to develop high-speed performance computing capability at Oak Ridge National Laboratory.
- Complete 13,000 hp CO_2 compressor and ISCE testing.

available reports/technical papers/presentations

Lupkes, K., "Ramgen Supersonic Shock Wave Compression and Engine Technology," presented at the 2012 NETL CO_2 Capture Technology Meeting, Pittsburgh, Pennsylvania, July 2012 *http://www.netl.doe.gov/publications/proceedings/12/co2capture/presentations/3-Wednesday/K%20Lupkes-Ramgen-Shockwave%20Compression.pdf*.

Grosvenor, A.D.; Zheltovodov, A.A.; Derunov, E.K.; 2012; "Numerical Prediction of 3D Shock-Induced Turbulent Flow Separation Surrounding Bodies of Revolution Adjacent to a Flat Surface," EUCASS Book Series on Advances in Aerospace Sciences, Progress in Flight Physics, Eds. Ph. Reijasse, D. Knight, M. Ivanov, and I. Lipatov, Torus Press, ISBN/ISSN: 978-2-7598-0674-4, pp. 119-140.

Baldwin, P., "Ramgen Supersonic Shock Wave Compression and Engine Technology," presented at the 2011 NETL CO_2 Capture Technology Meeting, Pittsburgh, Pennsylvania, August 2011 *http://www.netl.doe.gov/publications/proceedings/11/co2capture/presentations/3-Wednesday/24Aug11-Baldwin-Ramgen-Shock%20Wave%20Compression.pdf*.

Grosvenor, A.D.; Zheltovodov, A.A.; Matheson, M.A.; Sailer, L.M.; Krzysztopik, M.; Gutzwiller, D. P.; 2011; "Verification for a Series of Calculated 3D Shock Wave/Turbulent Boundary Layer Interaction Flows," Proceedings 4th European Conference for Aerospace Sciences (EUCASS 2011). July 4-8, 2011, Saint Petersburg, Russia. Paper 578.

Lawlor, S., "CO_2 Compression Using Supersonic Shock Wave Technology," presented at the 2010 NETL CO_2 Capture Technology Meeting, Pittsburgh, Pennsylvania, September 2010. *http://www.netl.doe.gov/File%20Library/Research/Coal/ewr/co2/Shawn-Lawlor---Ramgen-Power-Systems.pdf*.

Grosvenor, A.D.; Zheltovodov, A.A.; Derunov, E.K.; 2010; "SWBLI Calculations in Conditions of Aerodynamic Interference of Two Bodies of Revolution with a Flat Surface," ICMAR, Novosibirsk, Russia.

Lawlor, S., "CO_2 Compression Using Supersonic Shock Wave Technology," presented at the Annual NETL CO_2 Capture Technology for Existing Plants R&D Meeting, Pittsburgh, Pennsylvania, May 2009. *http://www.netl.doe.gov/File%20Library/Research/Coal/ewr/co2/42651-Ramgen-compression--Lawlor--mar09-public-version.pdf*.

Grosvenor, A.D.; Zheltovodov, A.A.; Derunov, E.K.; 2009; "Numerical Prediction of 3D Shock-Induced Turbulent Flow Separation Surrounding Bodies of Revolution Adjacent to a Flat Surface," Proceedings of the European Conference for Aero-Space Sciences (EUCASS), Versailles, France.

"Ramgen Power Systems Low-Cost, High-Efficiency CO_2 Compressor," Seventh Annual Conference on Carbon Capture and Sequestration, May 2008.

Grosvenor, A.D., 2008, "Numerical Studies Toward Prediction, Analysis and Treatment of SWBLI in Transonic Compressors," Proceedings of the International Conference on the Methods of Aerophysical Research (ICMAR), Novosibirsk, Russia.

Grosvenor, A.D.; Taylor, D.A.; Bucher, J.R.; Aarnio, M.J.; Brown, P.M.; Draper, R.D.; Lawlor, S.P., 2008; "Measured and Predicted Performance of a High Pressure Ratio Supersonic Compressor Rotor," Turbo Expo 2008 Berlin, GT2008-50150.

Grosvenor, A.D., 2007, "RANS Prediction of Transonic Compressive Rotor Performance Near Stall," Turbo Expo 2007 Montreal, GT2007-27691.

Grosvenor, A.D.; Brown, P.M.; Lawlor, S.P.; 2006; "Design Methodology and Predicted Performance for a Supersonic Compressor Stage," Turbo Expo 2006 Barcelona, GT2006-90409.

this page intentionally left blank

APPENDIX B: CARBON DIOXIDE CAPTURE TECHNOLOGY SHEETS

R&D COLLABORATIONS

PARTNERSHIP FOR CO_2 CAPTURE

primary project goals

The University of North Dakota Energy and Environmental Research Center (UNDEERC) is conducting pilot-scale testing to demonstrate and evaluate a range of carbon dioxide (CO_2) capture technologies to develop key technical and economic information that can be used to examine the feasibility of capture technologies as a function of fuel type and system configuration.

technical goals

- Integrate a high-efficiency flexible capture system with existing pilot-scale combustion and emission control systems to evaluate the performance of several capture techniques and technologies in flue gas streams derived from selected fossil fuels, biomass, and blends.
- Conduct testing of oxy-combustion for selected fuels and blends in one or more of UNDEERC's existing pilot-scale units.
- Evaluate the performance of emerging CO_2 capture technologies under development.
- Perform systems engineering modeling to examine efficient and cost-effective integration of CO_2 capture technologies in existing and new systems.

technical content

UNDEERC is constructing two pilot-scale systems with the intention of performing experiments on several advanced CO_2 capture technologies and comparing them to one another, as well as to monoethanolamine (MEA), which is considered to be the current state-of-the-art technology.

Baseline testing will be conducted using MEA to gather information to characterize each of the units. The results obtained by using MEA in the CO_2 absorption system will be used as a standard by which all other solvents will be compared. Data to be collected includes CO_2 removal, CO_2 purity, required regeneration heat, and effects of sulfur oxide (SO_x), nitrogen oxide (NO_x), particulate matter, and trace metals.

Baseline testing of the oxy-combustion system will follow similar procedures as the absorption system. The data collected will be used to identify potential challenges concerning this technology. These challenges include effects of mercury (Hg) capture, flame stability, fouling, slagging, and heat-transfer issues.

Figure 1: UNDEERC Post-Combustion CO_2 Capture Test Facility

technology maturity:

Pilot-Scale

project focus:

Partnership for CO_2 Capture

participant:

University of North Dakota Energy & Environmental Research Center (UNDEERC)

project number:

FC26-08NT43291-02.5

NETL project manager:

Arun C. Bose
arun.bose@netl.doe.gov

principal investigator:

Brandon M. Pavlish
UNDEERC
bpavlish@undeerc.org

partners:

N/A

performance period:

6/30/08 – 4/30/13

Once CO_2 capture technologies have been selected, testing will begin. Some of the technologies under consideration include other solvents (monodiethanolamine [MDEA], tailored amines, designer amines, ammonia, and potassium bicarbonate), membranes (metal membranes and carbozyme), and solid sorbents (zeolites, metal-organic frameworks, solid amines, and C-Quest). In addition to testing these technologies, different fuels will be used to evaluate their impact on the performance of the fabricated test units. Factors to be examined will include the effects of SO_x, NO_x, and other gas components; effects of ash deposition along with corrosion of refractory; and alloy components.

UNDEERC has completed the construction of the oxy-combustion system and has begun shakedown testing of the units. UNDEERC has also completed an Aspen model of the solvent absorption and stripping column (SASC) system.

technology advantages

UNDEERC will be capable of providing experimental data for a variety of advanced CO_2 capture technologies and oxy-combustion systems. This information will not only provide needed information for further advancement, but will provide a clear comparison of various approaches.

R&D challenges

Retrieving enough information on existing technologies to make appropriate selections for testing.

results to date/accomplishments

- Test campaign with Huntsman advanced solvent completed.
- Test campaign completed for evaluation of Cansolv's next generation solvent.
- Evaluation of C-Quest technology completed.
- Completed design and construction of the post-combustion test system.
- Completed the oxy-combustion retrofit.

next steps

Submit final report.

available reports/technical papers/presentations

Chen, S.G.; Lu, Y.; and Rostam-Abadi, M., "Carbon Dioxide Capture and Transportation Options in the Illinois Basin," Topical Report Oct 1, 2003–Sept 30, 2004 for U.S. Department of Energy Contract No. DE-FC26-03NT41994.

Metz, B.; Davidson, O.; Coninik, H.; Loos, M.; and Meyer, L. "IPCC Special Report Carbon Dioxide Capture and Storage Technical Summary," ISBN 92-9169-119-4, September 2005.

Narula, R.; Wen, H.; and Himes, K., "Economics of Greenhouse Gas Reduction – The Power Generating Technology Options," presented at the World Energy Congress, Buenos Aires, Brazil, October 2001.